| F.A. RTE. | SECTION | COUNTY | TOTAL SHEETS | SHEET NO. |
|---|---|---|---|---|
| * | (Q-1,X-1,F-1)RS-2, Q-1VBDR-1 | BOND | 113 | 1 |
| **FAU 9832, FAS 1751 | ILLINOIS | CONTRACT NO. 76K46 | | |

STATE OF ILLINOIS

01-20-2023 LETTING ITEM 116

DEPARTMENT OF TRANSPORTATION

D-98-068-17

# PROPOSED HIGHWAY PLANS

## FAU ROUTE 9832 / FAS ROUTE 1751 (US 40)
## SECTION (Q-1,X-1,F-1)RS-2, Q-1VBDR-1
## PROJECT COVD-AY2F(888)
## RESURFACING-DESIGNED OVERLAY, ADA IMPROVEMENTS, & BRIDGE DECK OVERLAY
## BOND COUNTY

C-98-213-18

FOR INDEX OF SHEETS, SEE SHEET NO. 2

**FAU 9832 ADT**
**RIDGE AVE TO IL 127**

2022 = 3700 (ESTIMATED)
SU = 2.2% MU = 2.5%

FUNCTIONAL CLASSIFICATION:
MINOR ARTERIAL

**FAU 9832 / FAS 1751 ADT**
**IL 127 TO MAPLE ST**

2022 = 2300 (ESTIMATED)
SU = 5.9% MU = 6.4%

FUNCTIONAL CLASSIFICATION:
MAJOR COLLECTOR

**FAS 1751 ADT**
**MAPLE ST TO FAYETTE COUNTY LINE**

2022 = 1900 (ESTIMATED)
SU = 3.8% MU = 3.8%

FUNCTIONAL CLASSIFICATION:
MAJOR COLLECTOR

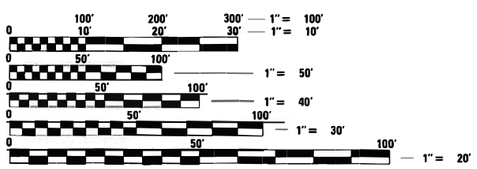


FULL SIZE PLANS HAVE BEEN PREPARED USING STANDARD ENGINEERING SCALES. REDUCED SIZED PLANS WILL NOT CONFORM TO STANDARD SCALES. IN MAKING MEASUREMENTS ON REDUCED PLANS, THE ABOVE SCALES MAY BE USED.

J.U.L.I.E.
JOINT UTILITY LOCATION INFORMATION FOR EXCAVATORS
1-800-892-0123
OR 811

**BRIDGE OVERLAY**
US 40
S.N. 003-0018
STA. 2097 + 16 TO
STA. 2099 + 96

**BRIDGE OVERLAY**
US 40
S.N. 003-0019
STA. 2105 + 03 TO
STA. 2106 + 58

**BEGIN PROJECT**
US 40 AT
RIDGE AVENUE
STA. 1933 + 62
LAT: 38.87704 N
LONG: 89.39525 W

**END PROJECT**
US 40 AT FAYETTE
COUNTY LINE
STA. 2363 + 43
LAT: 38.92079 N
LONG: 89.25680 W

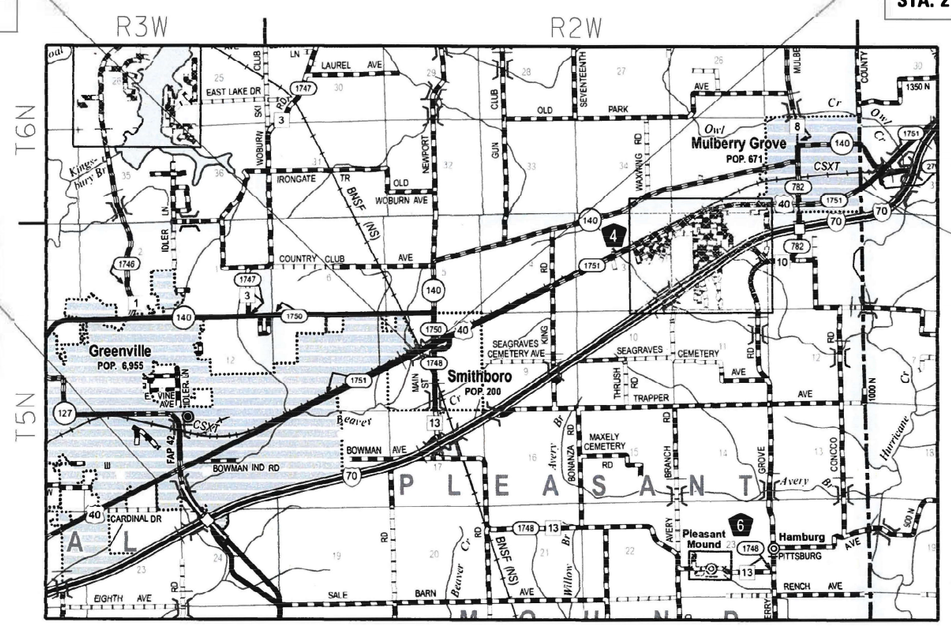


**LOCATION MAP**
NOT TO SCALE

GROSS LENGTH = 42,981 FT. = 8.140 MILE
NET LENGTH = 42,981 FT. = 8.140 MILE


LOCATION OF SECTION INDICATED THUS: –

STATE OF ILLINOIS
DEPARTMENT OF TRANSPORTATION

SUBMITTED May 11 20 22
REGIONAL ENGINEER

July 1, 2022
ENGINEER OF DESIGN AND ENVIRONMENT

July 1, 2022
DIRECTOR OF HIGHWAYS PROJECT IMPLEMENTATION

PROJECT ENGINEER: BILLIE OWEN (618) 346-3209
PROJECT MANAGER: BRANDON HUMPHREYS (618) 346-3413

CONTRACT NO. 76K46

PRINTED BY THE AUTHORITY OF THE STATE OF ILLINOIS

## INDEX OF SHEETS



## HIGHWAY STANDARDS

| | |
|---|---|
| 000001-08 | STANDARD SYMBOLS, ABBREVIATIONS AND PATTERNS |
| 001006 | DECIMAL OF AN INCH AND OF A FOOT |
| 280001-07 | TEMPORARY EROSION CONTROL SYSTEMS |
| 424001-11 | PERPENDICULAR CURB RAMPS FOR SIDEWALKS |
| 424006-05 | DIAGONAL CURB RAMPS FOR SIDEWALKS |
| 424031-02 | MEDIAN PEDESTRIAN CROSSINGS |
| 442201-03 | CLASS C & D PATCHES |
| 482011-03 | HMA SHLD. STRIPS/SHLDS. WITH RESURFACING OR WIDENING AND RESURFACING PROJECTS |
| 606001-08 | CONCRETE CURB TYPE B AND COMBINATION CONCRETE CURB AND GUTTER |
| 606301-04 | PC CONCRETE ISLANDS AND MEDIANS |
| 630001-12 | STEEL PLATE BEAM GUARDRAIL |
| 630301-09 | SHOULDER WIDENING FOR TYPE 1 (SPECIAL) GUARDRAIL TERMINALS |
| 631033-08 | TRAFFIC BARRIER TERMINAL, TYPE 6B |
| 642006-01 | SHOULDER RUMBLE STRIPS, 8 IN. |
| 701001-02 | OFF-RD OPERATIONS, 2L, 2W, MORE THAN 15' AWAY |
| 701006-05 | OFF-RD OPERATIONS, 2L, 2W, 15' TO 24" FROM PAVEMENT EDGE |
| 701011-04 | OFF-RD MOVING OPERATIONS, 2L, 2W, DAY ONLY |
| 701201-05 | LANE CLOSURE, 2L, 2W, DAY ONLY, FOR SPEEDS ≥ 45 MPH |
| 701306-04 | LANE CLOSURE, 2L, 2W, SLOW MOVING OPERATIONS DAY ONLY, FOR SPEEDS ≥ 45 MPH |
| 701311-03 | LANE CLOSURE 2L, 2W MOVING OPERATIONS - DAY ONLY |
| 701321-18 | LANE CLOSURE, 2L, 2W, BRIDGE REPAIR WITH BARRIER |
| 701326-04 | LANE CLOSURE, 2L, 2W, PAVEMENT WIDENING, FOR SPEEDS ≥ 45 MPH |
| 701336-07 | LANE CLOSURE, 2L, 2W, WORK AREAS IN SERIES, FOR SPEEDS ≥ 45 MPH |
| 701501-06 | URBAN LANE CLOSURE, 2L, 2W, UNDIVIDED |
| 701801-06 | SIDEWALK, CORNER OR CROSSWALK CLOSURE |
| 701901-08 | TRAFFIC CONTROL DEVICES |
| 720001-01 | SIGN PANEL MOUNTING DETAILS |
| 720006-04 | SIGN PANEL ERECTION DETAILS |
| 728001-01 | TELESCOPING STEEL SIGN SUPPORTS |
| 780001-05 | TYPICAL PAVEMENT MARKINGS |
| 781001-04 | TYPICAL APPLICATIONS RAISED REFLECTIVE PAVEMENT MARKERS |
| 782001-01 | CURB REFLECTORS |
| 782006-01 | GUARDRAIL AND BARRIER WALL REFLECTOR MOUNTING DETAILS |
| 886001-01 | DETECTOR LOOP INSTALLATIONS |
| 886006-01 | TYPICAL LAYOUTS FOR DETECTION LOOPS |
| 001001-02 | AREAS OF REINFORCEMENT BARS |
| 420001-10 | PAVEMENT JOINTS |
| 704001-08 | TEMPORARY CONCRETE BARRIER |
| 725001-01 | OBJECT AND TERMINALS MARKERS |
| 731001-01 | BASE FOR TELESCOPING STEEL SIGN SUPPORT |

## PERTINENT INFORMATION

THE CONTRACTOR SHALL BE AWARE THAT THE FOLLOWING PROJECT(S) WITHIN OR ADJACENT TO THE LIMITS OF THIS CONTRACT SECTION MAY BE UNDER CONSTRUCTION DURING CONSTRUCTION OPERATIONS FOR THIS CONTRACT:

- CONTRACT NO: 76P41, ROUTE FAS 779/FAU 9832 (US 40), SECTION (36-2)RS-4, BOND COUNTY

## GENERAL NOTES

1. THE UTILITIES KNOWN TO HAVE FACILITIES WITHIN THE PROJECT AREA ARE AS FOLLOWS:

   - AMEREN ILLINOIS
   - AT&T ILLINOIS
   - BOND MADISON WATER COMPANY
   - CLEARWAVE COMMUNICATIONS
   - DEPARTMENT OF CENTRAL MANAGEMENT SERVICES
   - FRONTIER COMMUNICATIONS
   - CITY OF GREENVILLE
   - ILLINOIS NETWORK ALLIANCE
   - MISSOURI NETWORK ALLIANCE
   - VILLAGE OF MULBERRY GROVE
   - NEWWAVE COMMUNICATIONS
   - PEG BANDWIDTH IL, LLC
   - ROYAL LAKES PUBLIC WATER DISTRICT
   - VILLAGE OF SMITHBORO
   - SOUTHWESTERN ELECTRIC COOPERATIVE, INC.

2. NO SURVEY WAS PERFORMED FOR THIS PROJECT AND THE PLANS WERE CREATED USING MICROFILM AND FIELD MEASUREMENTS.

3. THE USE OF VIBRATORY ROLLERS WILL NOT BE PERMITTED WITHIN THE CITY LIMITS OF GREENVILLE, SMITHBORO, AND MULBERRY GROVE. THIS DOES NOT RELIEVE THE CONTRACTOR OF DENSITY REQUIREMENTS FOR THE CONSTRUCTION OF THE BITUMINOUS PAVEMENTS AS SPECIFIED IN SECTIONS 406 & 407 OF THE STANDARD SPECIFICATIONS.

4. THE TEMPORARY RAMPS USED ON ALL SIDE STREETS AND ENTRANCES SHALL BE 1.50 FEET IN LENGTH SO AS NOT TO INTERFERE WITH THE THRU TRAFFIC LANES.

5. IF THE CONTRACTOR, FOR HIS CONSTRUCTION ACTIVITY, REMOVES TREES WITHIN THE RIGHT-OF-WAY LIMITS WHICH ARE NOT DESIGNATED ON THE PLANS FOR REMOVAL, I.E. IN ORDER TO GAIN ACCESS TO THE PROJECT SITE; IT WILL BE HIS RESPONSIBILITY TO REPLACE THE TREES AT A 1:1 RATIO. THE TREES WILL BE REPLACED WITH A 1 GALLON NATIVE ILLINOIS TREE SPECIES AND SHALL BE APPROVED BY THE ENGINEER. THE TREE REMOVAL AND TREE REPLACEMENT WILL BE AT THE CONTRACTOR'S EXPENSE, AND NO ADDITIONAL COMPENSATION WILL BE ALLOWED.

6. THE CONTRACTOR SHALL PROVIDE POSITIVE AND ADEQUATE DRAINAGE AT ALL TIMES.

7. ALL REMOVED GUARDRAIL COMPONENTS ARE THE PROPERTY OF THE CONTRACTOR AND THE SALVAGE VALUE OF SAID COMPONENTS SHALL BE REFLECTED IN THE CONTRACTOR'S BID.

8. THE MATERIAL TRANSFER DEVICE (MTD) MAY OPERATE IN AN UNLOADED CONDITION WITH A MAXIMUM GROSS WEIGHT OF 39 TONS ON SN 003-2007, AND A MAXIMUM GROSS WEIGHT OF 40 TONS ON SN 003-2433, SN 003-2007, SN 003-2434, SN 003-2435, SN 003-0018, SN 003-0019, AND SN 003-2436. IF THE SAME MTD IS USED THROUGHOUT THE CONTRACT, IT MUST BE LIMITED TO AN EMPTY GROSS WEIGHT OF LESS THAN OR EQUAL TO 39 TONS.

9. THE BRIDGE HMA IS CALCULATED BASED ON 1-1/4 INCHES, EXCLUDING 3/4 INCHES FOR WATERPROOFING MEMBRANE SYSTEM.

10. THE FOLLOWING MIXTURE REQUIREMENTS ARE APPLICABLE FOR THIS PROJECT:

| MIXTURE USE | SURFACE | BINDER | SHOULDERS (LOWER) | SHOULDERS (SURFACE) | BD OVERLAY POLY SURFACE |
|---|---|---|---|---|---|
| AC/PG | PG 64-22 | PG 64-22 | PG 64-22 | PG 64-22 | SBS PG 76-22 |
| RAP %(MAX) | SEE SPECIAL PROVISION | SEE SPECIAL PROVISION | SEE SPECIAL PROVISION | SEE SPECIAL PROVISION | SEE SPECIAL PROVISION |
| DESIGN AIR VOIDS | 4.0% @ Ndes=70 | 4.0% @ Ndes=70 | 4.0% @ Ndes=30 | 4.0% @ Ndes=30 | 4.0% @ Ndes=70 |
| MIX COMPOSITION (GRADATION) | IL 9.5 | IL 19.0 | IL 19.0L | IL 9.5L | IL 9.5FG |
| FRICTION AGG | MIXTURE "C" | MIXTURE "B" | | | MIXTURE "D" |
| QUALITY MGMT PROGRAM | QCP | QCP | QC/QA | QC/QA | QC/QA |
| MATERIAL TRANSFER DEVICE REQUIRED | YES | YES | NO | NO | NO |

PLAN QUANTITIES FOR HOT-MIX ASPHALT ITEMS ARE CALCULATED USING A UNIT WEIGHT OF 112 LBS/SQ YD/IN

## COMMITMENTS

NONE

REV. - MS

| CODE NO. | ITEM | UNIT | TOTAL QUANTITY | CONSTRUCTION CODE<br>FEDERAL 100%<br>ROADWAY<br>0005<br>URBAN | FEDERAL 100%<br>ROADWAY<br>0005<br>RURAL | FEDERAL 100%<br>003-0018<br>BRIDGE<br>0047<br>URBAN | FEDERAL 100%<br>003-0019<br>BRIDGE<br>0047<br>URBAN |
|---|---|---|---|---|---|---|---|
| 20200100 | EARTH EXCAVATION | CU YD | 195 | | 195 | | |
| 20200600 | EXCAVATING AND GRADING EXISTING SHOULDER | UNIT | 811 | 426 | 385 | | |
| 25000210 | SEEDING, CLASS 2A | ACRE | 0.75 | 0.25 | 0.50 | | |
| 25000400 | NITROGEN FERTILIZER NUTRIENT | POUND | 68 | 11 | 57 | | |
| 25000500 | PHOSPHORUS FERTILIZER NUTRIENT | POUND | 68 | 11 | 57 | | |
| 25000600 | POTASSIUM FERTILIZER NUTRIENT | POUND | 68 | 11 | 57 | | |
| 25100115 | MULCH, METHOD 2 | ACRE | 0.75 | 0.25 | 0.50 | | |
| 28000250 | TEMPORARY EROSION CONTROL SEEDING | POUND | 142 | 9 | 133 | | |
| 28000305 | TEMPORARY DITCH CHECKS | FOOT | 24 | 9 | 15 | | |
| 28000400 | PERIMETER EROSION BARRIER | FOOT | 956 | 363 | 593 | | |
| 28000500 | INLET AND PIPE PROTECTION | EACH | 4 | 2 | 2 | | |
| 31102000 | SUBBASE GRANULAR MATERIAL, TYPE C | CU YD | 496 | 164 | 332 | | |
| 35400400 | PORTLAND CEMENT CONCRETE BASE COURSE WIDENING 9" | SQ YD | 40 | | 40 | | |
| 40600290 | BITUMINOUS MATERIALS (TACK COAT) | POUND | 78976 | 43251 | 35725 | | |
| 40600370 | LONGITUDINAL JOINT SEALANT | FOOT | 48395 | 27005 | 21390 | | |
| 40600990 | TEMPORARY RAMP | SQ YD | 946 | 679 | 267 | | |

| CODE NO. | ITEM | UNIT | TOTAL QUANTITY | CONSTRUCTION CODE<br>FEDERAL 100%<br>ROADWAY<br>0005<br>URBAN | FEDERAL 100%<br>ROADWAY<br>0005<br>RURAL | FEDERAL 100%<br>003-0018<br>BRIDGE<br>0047<br>URBAN | FEDERAL 100%<br>003-0019<br>BRIDGE<br>0047<br>URBAN |
|---|---|---|---|---|---|---|---|
| 40603085 | HOT-MIX ASPHALT BINDER COURSE, IL-19.0, N70 | TON | 14660 | 7981 | 6679 | | |
| 40604052 | HOT-MIX ASPHALT SURFACE COURSE, IL-9.5, MIX "C", N70 | TON | 9805 | 5357 | 4448 | | |
| 40604112 | POLYMERIZED HOT-MIX ASPHALT SURFACE COURSE, IL-9.5FG, MIX "D", N70 | TON | 110 | | | 71 | 39 |
| ☐ 42400100 | PORTLAND CEMENT CONCRETE SIDEWALK 4 INCH | SQ FT | 256 | 256 | | | |
| ☐ 42400800 | DETECTABLE WARNINGS | SQ FT | 43 | 43 | | | |
| 44000100 | PAVEMENT REMOVAL | SQ YD | 2275 | 956 | 1319 | | |
| 44000164 | HOT-MIX ASPHALT SURFACE REMOVAL, 3 3/4" | SQ YD | 117103 | 64486 | 52617 | | |
| 44000400 | GUTTER REMOVAL | FOOT | 7420 | 1406 | 6014 | | |
| 44000500 | COMBINATION CURB AND GUTTER REMOVAL | FOOT | 2687 | 2016 | 671 | | |
| ☐ 44000600 | SIDEWALK REMOVAL | SQ FT | 187 | 187 | | | |
| ☐ 44003100 | MEDIAN REMOVAL | SQ FT | 260 | 260 | | | |
| 44004250 | PAVED SHOULDER REMOVAL | SQ YD | 1324 | 1324 | | | |
| 44201415 | CLASS C PATCHES, TYPE II, 15 INCH | SQ YD | 764 | 646 | 118 | | |
| 44201419 | CLASS C PATCHES, TYPE III, 15 INCH | SQ YD | 212 | 212 | | | |
| 44201421 | CLASS C PATCHES, TYPE IV, 15 INCH | SQ YD | 65 | 65 | | | |
| 44201437 | CLASS C PATCHES, TYPE II, 17 INCH | SQ YD | 557 | 103 | 454 | | |

☐ FEDERAL 100% - SAFETY - 0021 - URBAN

REV. - MS

| CODE NO. | ITEM | UNIT | TOTAL QUANTITY | CONSTRUCTION CODE<br>FEDERAL 100%<br>ROADWAY<br>0005<br>URBAN | FEDERAL 100%<br>ROADWAY<br>0005<br>RURAL | FEDERAL 100%<br>003-0018<br>BRIDGE<br>0047<br>URBAN | FEDERAL 100%<br>003-0019<br>BRIDGE<br>0047<br>URBAN |
|---|---|---|---|---|---|---|---|
| 44201439 | CLASS C PATCHES, TYPE III, 17 INCH | SQ YD | 284 | 39 | 245 | | |
| 44201445 | CLASS C PATCHES, TYPE II, 18 INCH | SQ YD | 20 | 20 | | | |
| 44201449 | CLASS C PATCHES, TYPE IV, 18 INCH | SQ YD | 65 | 65 | | | |
| 48102100 | AGGREGATE WEDGE SHOULDER, TYPE B | TON | 2337 | 1253 | 1084 | | |
| 48203029 | HOT-MIX ASPHALT SHOULDERS, 8" | SQ YD | 34748 | 18943 | 15805 | | |
| 48203100 | HOT-MIX ASPHALT SHOULDERS | TON | 260 | 260 | | | |
| 50102400 | CONCRETE REMOVAL | CU YD | 25.2 | | | 12.1 | 13.1 |
| 50105220 | PIPE CULVERT REMOVAL | FOOT | 82 | | 82 | | |
| 50300225 | CONCRETE STRUCTURES | CU YD | 9.8 | | | 4.4 | 5.4 |
| 50300255 | CONCRETE SUPERSTRUCTURE | CU YD | 15.4 | | | 7.7 | 7.7 |
| 50800205 | REINFORCEMENT BARS, EPOXY COATED | POUND | 3740 | | | 1740 | 2000 |
| 50800515 | BAR SPLICERS | EACH | 72 | | | 36 | 36 |
| 52000110 | PREFORMED JOINT STRIP SEAL | FOOT | 143 | | | 68 | 75 |
| 58100200 | WATERPROOFING MEMBRANE SYSTEM | SQ YD | 1478 | | | 961 | 517 |
| 59000200 | EPOXY CRACK INJECTION | FOOT | 10 | | | 5 | 5 |
| 60260100 | INLETS TO BE ADJUSTED | EACH | 4 | | | 2 | 2 |

| | CODE NO. | ITEM | UNIT | TOTAL QUANTITY | CONSTRUCTION CODE<br>FEDERAL 100%<br>ROADWAY<br>0005<br>URBAN | FEDERAL 100%<br>ROADWAY<br>0005<br>RURAL | FEDERAL 100%<br>003-0018<br>BRIDGE<br>0047<br>URBAN | FEDERAL 100%<br>003-0019<br>BRIDGE<br>0047<br>URBAN |
|---|---|---|---|---|---|---|---|---|
| | 60500060 | REMOVING INLETS | EACH | 3 | | 3 | | |
| | 60602800 | CONCRETE GUTTER, TYPE B | FOOT | 3183 | | 3183 | | |
| ☐ | 60608600 | COMBINATION CONCRETE CURB AND GUTTER, TYPE M-6.06 | FOOT | 80.0 | 80.0 | | | |
| ☐ | 60618300 | CONCRETE MEDIAN SURFACE, 4 INCH | SQ FT | 273 | 273 | | | |
| * | 63000003 | STEEL PLATE BEAM GUARDRAIL, TYPE A, 9 FOOT POSTS | FOOT | 4338 | 4338 | | | |
| * | 63100089 | TRAFFIC BARRIER TERMINAL, TYPE 6B | EACH | 8 | 8 | | | |
| * | 63100167 | TRAFFIC BARRIER TERMINAL, TYPE 1 (SPECIAL) TANGENT | EACH | 4 | 4 | | | |
| | 63200310 | GUARDRAIL REMOVAL | FOOT | 4789 | 4789 | | | |
| | 64200108 | SHOULDER RUMBLE STRIPS, 8 INCH | FOOT | 80112 | 45406 | 34706 | | |
| * | 66900200 | NON-SPECIAL WASTE DISPOSAL | CU YD | 4 | 4 | | | |
| * | 66900530 | SOIL DISPOSAL ANALYSIS | EACH | 2 | 2 | | | |
| * | 66901001 | REGULATED SUBSTANCES PRE-CONSTRUCTION PLAN | L SUM | 1 | 1 | | | |
| * | 66901003 | REGULATED SUBSTANCES FINAL CONSTRUCTION REPORT | L SUM | 1 | 1 | | | |
| * | 66901006 | REGULATED SUBSTANCES MONITORING | CAL DA | 4 | 4 | | | |
| | 67000400 | ENGINEER'S FIELD OFFICE, TYPE A | CAL MO | 12 | 6 | 6 | | |
| | 67100100 | MOBILIZATION | L SUM | 1 | 0.25 | 0.25 | 0.25 | 0.25 |

* SPECIALTY ITEM

☐ FEDERAL 100% - SAFETY - 0021 - URBAN

REV. - MS

| CODE NO. | ITEM | UNIT | TOTAL QUANTITY | CONSTRUCTION CODE<br>FEDERAL 100%<br>ROADWAY<br>0005<br>URBAN | FEDERAL 100%<br>ROADWAY<br>0005<br>RURAL | FEDERAL 100%<br>003-0018<br>BRIDGE<br>0047<br>URBAN | FEDERAL 100%<br>003-0019<br>BRIDGE<br>0047<br>URBAN |
|---|---|---|---|---|---|---|---|
| 70100405 | TRAFFIC CONTROL AND PROTECTION, STANDARD 701321 | EACH | 2 | | | 1 | 1 |
| 70100450 | TRAFFIC CONTROL AND PROTECTION, STANDARD 701201 | L SUM | 1 | 0.5 | 0.5 | | |
| 70100460 | TRAFFIC CONTROL AND PROTECTION, STANDARD 701306 | L SUM | 1 | 0.5 | 0.5 | | |
| 70100500 | TRAFFIC CONTROL AND PROTECTION, STANDARD 701326 | L SUM | 1 | 0.5 | 0.5 | | |
| 70102620 | TRAFFIC CONTROL AND PROTECTION, STANDARD 701501 | L SUM | 1 | 0.5 | 0.5 | | |
| 70100600 | TRAFFIC CONTROL AND PROTECTION, STANDARD 701336 | L SUM | 1 | 0.5 | 0.5 | | |
| 70102640 | TRAFFIC CONTROL AND PROTECTION, STANDARD 701801 | L SUM | 1 | 0.5 | 0.5 | | |
| 70103815 | TRAFFIC CONTROL SURVEILLANCE | CAL DA | 60 | 30 | 30 | | |
| 70106500 | TEMPORARY BRIDGE TRAFFIC SIGNALS | EACH | 2 | | | 1 | 1 |
| 70106700 | TEMPORARY RUMBLE STRIPS | EACH | 12 | | | 6 | 6 |
| 70107004 | PAVEMENT MARKING BLACKOUT TAPE, 4" | FOOT | 6597 | 6597 | | | |
| 70300100 | SHORT TERM PAVEMENT MARKING | FOOT | 5652 | 2544 | 3108 | | |
| 70300150 | SHORT TERM PAVEMENT MARKING REMOVAL | SQ FT | 4090 | 3050 | 1040 | | |
| 70300211 | TEMPORARY PAVEMENT MARKING LETTERS AND SYMBOLS - PAINT | SQ FT | 436.8 | 436.8 | | | |
| 70300221 | TEMPORARY PAVEMENT MARKING - LINE 4"- PAINT | FOOT | 99057 | 60550 | 38507 | | |
| 70300241 | TEMPORARY PAVEMENT MARKING - LINE 6"- PAINT | FOOT | 10510 | | 10510 | | |
| 70300251 | TEMPORARY PAVEMENT MARKING - LINE 8"- PAINT | FOOT | 224 | | 224 | | |
| 70300261 | TEMPORARY PAVEMENT MARKING - LINE 12"- PAINT | FOOT | 469 | 370 | 99 | | |

REV. - MS

| | CODE NO. | ITEM | UNIT | TOTAL QUANTITY | CONSTRUCTION CODE<br>FEDERAL 100%<br>ROADWAY<br>0005<br>URBAN | FEDERAL 100%<br>ROADWAY<br>0005<br>RURAL | FEDERAL 100%<br>003-0018<br>BRIDGE<br>0047<br>URBAN | FEDERAL 100%<br>003-0019<br>BRIDGE<br>0047<br>URBAN |
|---|---|---|---|---|---|---|---|---|
| | 70300281 | TEMPORARY PAVEMENT MARKING - LINE 24"- PAINT | FOOT | 269 | 165 | 104 | | |
| | 70400100 | TEMPORARY CONCRETE BARRIER | FOOT | 510 | 510 | | | |
| | 70400200 | RELOCATE TEMPORARY CONCRETE BARRIER | FOOT | 1530 | 1530 | | | |
| | 70600250 | IMPACT ATTENUATORS, TEMPORARY (NON- REDIRECTIVE), TEST LEVEL 3 | EACH | 2 | | | 1 | 1 |
| | 70600350 | IMPACT ATTENUATORS, RELOCATE (NON- REDIRECTIVE), TEST LEVEL 3 | EACH | 6 | | | 3 | 3 |
| * | 72000100 | SIGN PANEL - TYPE 1 | SQ FT | 95 | 9 | 83 | ☐ 3 | |
| * | 72400100 | REMOVE SIGN PANEL ASSEMBLY - TYPE A | EACH | 6 | | 6 | | |
| * | 72400200 | REMOVE SIGN PANEL ASSEMBLY - TYPE B | EACH | 2 | | 2 | | |
| * | 72400310 | REMOVE SIGN PANEL - TYPE 1 | SQ FT | 7 | 7 | | | |
| * | 72501000 | TERMINAL MARKER - DIRECT APPLIED | EACH | 4 | 4 | | | |
| * | 72800100 | TELESCOPING STEEL SIGN SUPPORT | FOOT | 29 | 16 | 13 | | |
| * | 73000100 | WOOD SIGN SUPPORT | FOOT | 145 | | 145 | | |
| * | 78000100 | THERMOPLASTIC PAVEMENT MARKING - LETTERS AND SYMBOLS | SQ FT | 436.8 | 436.8 | | | |
| * | 78000200 | THERMOPLASTIC PAVEMENT MARKING - LINE 4" | FOOT | 99057 | 60550 | 38507 | | |
| * | 78000400 | THERMOPLASTIC PAVEMENT MARKING - LINE 6" | FOOT | 10510 | | 10510 | | |
| * | 78000500 | THERMOPLASTIC PAVEMENT MARKING - LINE 8" | FOOT | 224 | | 224 | | |

☐ FEDERAL 100% - SAFETY - 0021 - URBAN

* SPECIALTY ITEM

REV. - MS

| | CODE NO. | ITEM | UNIT | TOTAL QUANTITY | CONSTRUCTION CODE<br>FEDERAL 100%<br>ROADWAY<br>0005<br>URBAN | FEDERAL 100%<br>ROADWAY<br>0005<br>RURAL | FEDERAL 100%<br>003-0018<br>BRIDGE<br>0047<br>URBAN | FEDERAL 100%<br>003-0019<br>BRIDGE<br>0047<br>URBAN |
|---|---|---|---|---|---|---|---|---|
| * | 78000600 | THERMOPLASTIC PAVEMENT MARKING - LINE 12" | FOOT | 469 | 370 | 99 | | |
| * | 78000650 | THERMOPLASTIC PAVEMENT MARKING - LINE 24" | FOOT | 269 | 165 | 104 | | |
| * | 78100100 | RAISED REFLECTIVE PAVEMENT MARKER | EACH | 947 | 510 | 437 | | |
| * | 78200005 | GUARDRAIL REFLECTORS, TYPE A | EACH | 38 | 38 | | | |
| * | 78200020 | CURB REFLECTORS | EACH | 14 | 14 | | | |
| | 78300200 | RAISED REFLECTIVE PAVEMENT MARKER REMOVAL | EACH | 947 | 510 | 437 | | |
| | 78300202 | PAVEMENT MARKING REMOVAL - WATER BLASTING | SQ FT | 79748 | 42650 | 37098 | | |
| ☐ * | 88102825 | PEDESTRIAN SIGNAL HEAD, POLYCARBONATE, LED, 1-FACE, BRACKET MOUNTED WITH COUNT DOWN TIMER | EACH | 4 | 4 | | | |
| * | 88600600 | DETECTOR LOOP REPLACEMENT | FOOT | 1711 | 1711 | | | |
| ☐ * | 89502375 | REMOVE EXISTING TRAFFIC SIGNAL EQUIPMENT | EACH | 12 | 12 | | | |
| | X0320882 | GUTTERS TO BE CLEANED | FOOT | 100 | | | | 100 |
| | X0900065 | REPLACE JOINT FILLER | FOOT | 111 | | | 56 | 55 |
| | X1200030 | FILLING INLETS, TEMPORARY | EACH | 4 | | | 2 | 2 |
| | X4403700 | MEDIAN REMOVAL (SPECIAL) | SQ FT | 357 | | 357 | | |
| * | X5060601 | CONTAINMENT AND DISPOSAL OF NON-LEAD PAINT CLEANING RESIDUES NO. 1 | L SUM | 1 | | | 1 | |
| * | X5060602 | CONTAINMENT AND DISPOSAL OF NON-LEAD PAINT CLEANING RESIDUES NO. 2 | L SUM | 1 | | | | 1 |

* SPECIALTY ITEM

☐ FEDERAL 100% - SAFETY - 0021 - URBAN

REV. - MS

MODEL: Default
FILE NAME: pw:\\ildot-pw.bentley.com:PWIDOT\Documents\IDOT Offices\District 8\Projects\D876K46\CADData\CADsheets\D876K46-sht-SQQ.dgn

| | | |
|---|---|---|
| USER NAME = humphreysb | DESIGNED - | REVISED - |
| | DRAWN - | REVISED - |
| PLOT SCALE = 100.0000 ' / in. | CHECKED - | REVISED - |
| PLOT DATE = 5/13/2022 | DATE - | REVISED - |

**STATE OF ILLINOIS**
**DEPARTMENT OF TRANSPORTATION**

**SUMMARY OF QUANTITIES**

SCALE: | SHEET 7 OF 8 SHEETS | STA. TO STA.

| **F.A. RTE. | SECTION | COUNTY | TOTAL SHEETS | SHEET NO. |
|---|---|---|---|---|
| ** | (Q-1,X-1,F-1)RS-2, Q-1VBDR-1 | BOND | 113 | 9 |
| **FAU 9832, FAS 1751 | | CONTRACT NO. 76K46 | | |
| | | ILLINOIS FED. AID PROJECT | | |

| | CODE NO. | ITEM | UNIT | TOTAL QUANTITY | CONSTRUCTION CODE<br>FEDERAL 100%<br>ROADWAY<br>0005<br>URBAN | FEDERAL 100%<br>ROADWAY<br>0005<br>RURAL | FEDERAL 100%<br>003-0018<br>BRIDGE<br>0047<br>URBAN | FEDERAL 100%<br>003-0019<br>BRIDGE<br>0047<br>URBAN |
|---|---|---|---|---|---|---|---|---|
| | X7200200 | WIDE LOAD SIGNING | L SUM | 1 | | | 0.5 | 0.5 |
| * | X7800100 | PAINT PAVEMENT MARKING - RAISED MEDIAN | SQ FT | 52 | 52 | | | |
| □ * | X8760200 | ACCESSIBLE PEDESTRIAN SIGNALS | EACH | 4 | 4 | | | |
| * | Z0010501 | CLEANING AND PAINTING STEEL BRIDGE NO. 1 | L SUM | 1 | | | 1 | |
| * | Z0010502 | CLEANING AND PAINTING STEEL BRIDGE NO. 2 | L SUM | 1 | | | | 1 |
| | Z0010615 | CLEANING EXISTING INLETS | EACH | 2 | | | 1 | 1 |
| | Z0013798 | CONSTRUCTION LAYOUT | L SUM | 1 | 0.2 | 0.4 | □ 0.4 | |
| | Z0016200 | DECK SLAB REPAIR (PARTIAL) | SQ YD | 30 | | | 20 | 10 |
| | Z0034105 | MATERIAL TRANSFER DEVICE | TON | 24292 | 13165 | 11127 | | |
| | Z0042200 | PORTLAND CEMENT CONCRETE PAVEMENT SURFACE REMOVAL | SQ YD | 252 | | 252 | | |
| Ø | Z0076600 | TRAINEES | HOUR | 2000 | 2000 | | | |
| | Z0048665 | RAILROAD PROTECTIVE LIABILITY INSURANCE | L SUM | 1 | | | 1 | |
| Ø | Z0076604 | TRAINEES TRAINING PROGRAM GRADUATE | HOUR | 2000 | 2000 | | | |

* SPECIALTY ITEM

Ø 0042

□ FEDERAL 100% - SAFETY - 0021 - URBAN

□ FEDERAL 100% - SAFETY - 0021 - URBAN

REV. - MS

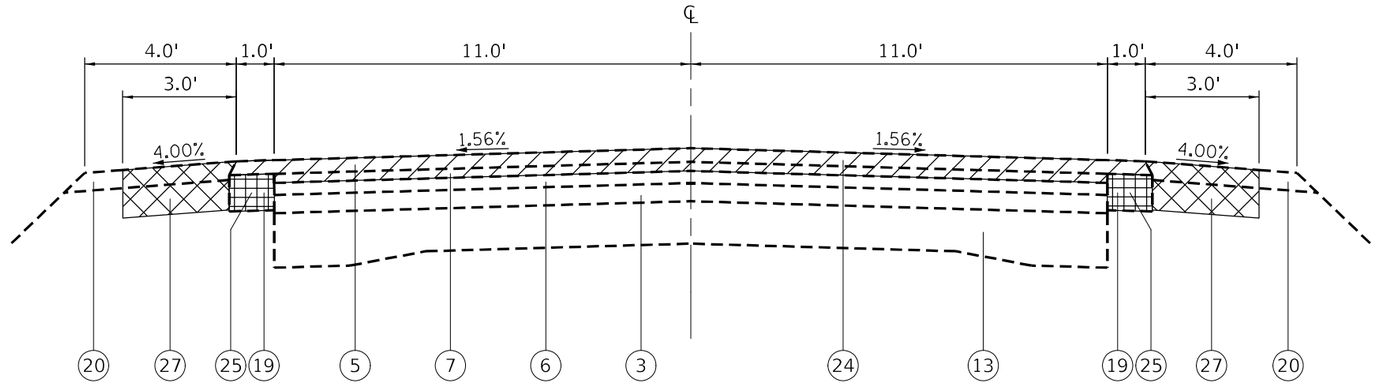


## EXISTING TYPICAL SECTION

## FAU 9832 (US 40)

STA 1933+62 TO STA 1934+03

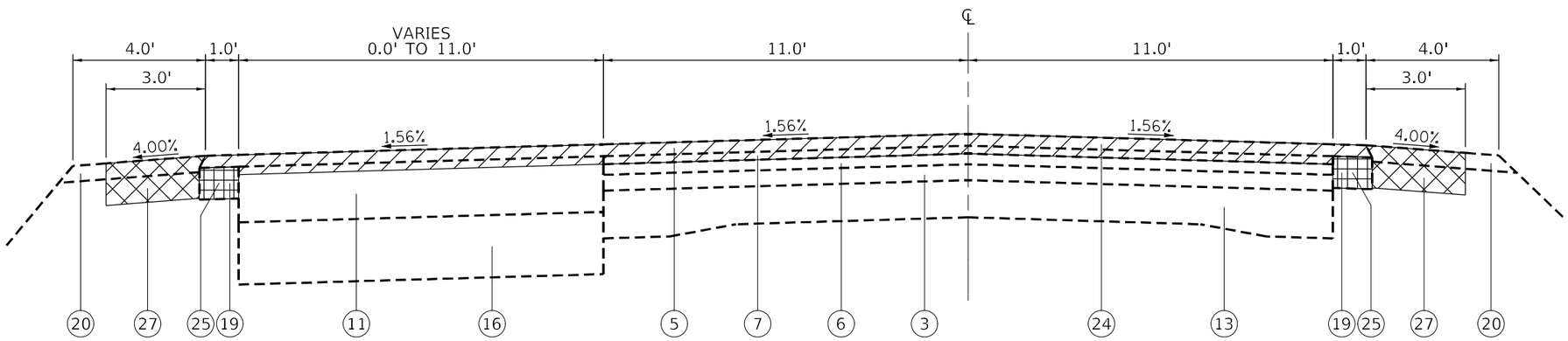


## EXISTING TYPICAL SECTION

## FAU 9832 (US 40)

STA 1934+03 TO STA 1937+02

HMA SURFACE COURSE REMOVAL

PAVEMENT REMOVAL

PAVED SHOULDER REMOVAL

CURB & GUTTER/ GUTTER REMOVAL

EXCAVATING AND GRADING EXISTING SHOULDER

## LEGEND

1. EXISTING BITUMINOUS SURFACE COURSE, 4"
2. EXISTING BITUMINOUS SURFACE COURSE, 3 3/4"
3. EXISTING BITUMINOUS SURFACE COURSE, 3"
4. EXISTING BITUMINOUS SURFACE COURSE, 2 1/2"
5. EXISTING BITUMINOUS SURFACE COURSE, 2 1/4"
6. EXISTING BITUMINOUS SURFACE COURSE, 2"
7. EXISTING BITUMINOUS SURFACE COURSE, 1 1/2"
8. EXISTING BITUMINOUS SURFACE COURSE, 1 1/4"
9. EXISTING BITUMINOUS MICROSURFACING, 1/2"
10. EXISTING BITUMINOUS BINDER COURSE, 12 1/4"
11. EXISTING BITUMINOUS BINDER COURSE, 11 1/4"
12. EXISTING BITUMINOUS LEVELING BINDER, VARIES 2" TO 10"
13. EXISTING P.C.C. PAVEMENT, 9"-7"-9"
14. EXISTING CONCRETE DECK SLAB, 7 1/2"
15. EXISTING SUBBASE GRANULAR MATERIAL, TY C, 4"
16. EXISTING LIME MODIFIED SOIL, 11 3/4"
17. EXISTING LIME MODIFIED SOIL, 10"
18. EXISTING HOT-MIX ASPHALT SHOULDER, 8"
19. EXISTING HOT-MIX ASPHALT SHOULDER, 6"
20. EXISTING AGGREGATE SHOULDERS, TYPE B
21. EXISTING CONCRETE COMBINATION CURB & GUTTER, TYPE B
22. EXISTING CONCRETE GUTTER, TYPE B
23. EXISTING PARTIAL REMAINING CONCRETE CURB & GUTTER
24. PROPOSED HOT-MIX ASPHALT SURFACE REMOVAL, 3 3/4"
25. PROPOSED PAVED SHOULDER REMOVAL
26. PROPOSED PAVEMENT REMOVAL
27. PROPOSED EXCAVATING AND GRADING EXISTING SHOULDER
28. PROPOSED COMBINATION CURB AND GUTTER REMOVAL
29. PROPOSED GUTTER REMOVAL
30. PROPOSED HOT-MIX ASPHALT SURFACE COURSE, 1 1/2"
31. PROPOSED HOT-MIX ASPHALT SURFACE COURSE, 1 1/4"
32. PROPOSED HOT-MIX ASPHALT BINDER COURSE, 2 1/4"
33. PROPOSED GRANULAR MATERIAL, TYPE C
34. PROPOSED HOT-MIX ASPHALT SHOULDER, 8"
35. PROPOSED HOT-MIX ASPHALT SHOULDER, 3 3/4"
36. PROPOSED AGGREGATE WEDGE SHOULDER, TYPE B
37. PROPOSED CONCRETE GUTTER, TYPE B
38. PROPOSED TACK COAT
39. PROPOSED LONGITUDINAL JOINT SEALANT
40. PROPOSED WATERPROOFING MEMBRANE SYSTEM

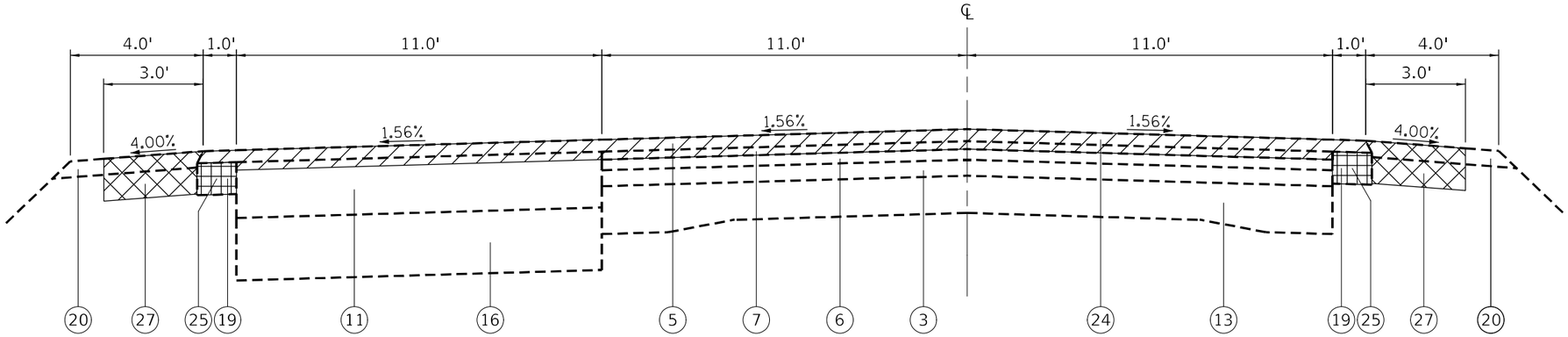


## EXISTING TYPICAL SECTION

## FAU 9832 (US 40)

STA 1937+02 TO STA 1941+02

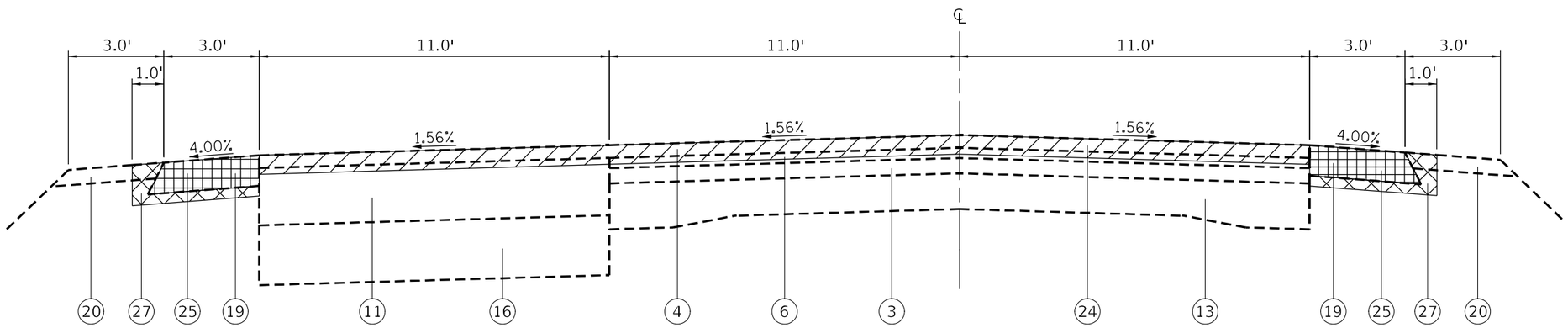


## EXISTING TYPICAL SECTION

## FAU 9832 (US 40)

STA 1941+02 TO STA 1943+35

HMA SURFACE COURSE REMOVAL

PAVEMENT REMOVAL

EXCAVATING AND GRADING EXISTING SHOULDER

PAVED SHOULDER REMOVAL

CURB & GUTTER/ GUTTER REMOVAL

## LEGEND

1. EXISTING BITUMINOUS SURFACE COURSE, 4"
2. EXISTING BITUMINOUS SURFACE COURSE, 3 3/4"
3. EXISTING BITUMINOUS SURFACE COURSE, 3"
4. EXISTING BITUMINOUS SURFACE COURSE, 2 1/2"
5. EXISTING BITUMINOUS SURFACE COURSE, 2 1/4"
6. EXISTING BITUMINOUS SURFACE COURSE, 2"
7. EXISTING BITUMINOUS SURFACE COURSE, 1 1/2"
8. EXISTING BITUMINOUS SURFACE COURSE, 1 1/4"
9. EXISTING BITUMINOUS MICROSURFACING, 1/2"
10. EXISTING BITUMINOUS BINDER COURSE, 12 1/4"
11. EXISTING BITUMINOUS BINDER COURSE, 11 1/4"
12. EXISTING BITUMINOUS LEVELING BINDER, VARIES 2" TO 10"
13. EXISTING P.C.C. PAVEMENT, 9"-7"-9"
14. EXISTING CONCRETE DECK SLAB, 7 1/2"
15. EXISTING SUBBASE GRANULAR MATERIAL, TY C, 4"
16. EXISTING LIME MODIFIED SOIL, 11 3/4"
17. EXISTING LIME MODIFIED SOIL, 10"
18. EXISTING HOT-MIX ASPHALT SHOULDER, 8"
19. EXISTING HOT-MIX ASPHALT SHOULDER, 6"
20. EXISTING AGGREGATE SHOULDERS, TYPE B
21. EXISTING CONCRETE COMBINATION CURB & GUTTER, TYPE B
22. EXISTING CONCRETE GUTTER, TYPE B
23. EXISTING PARTIAL REMAINING CONCRETE CURB & GUTTER
24. PROPOSED HOT-MIX ASPHALT SURFACE REMOVAL, 3 3/4"
25. PROPOSED PAVED SHOULDER REMOVAL
26. PROPOSED PAVEMENT REMOVAL
27. PROPOSED EXCAVATING AND GRADING EXISTING SHOULDER
28. PROPOSED COMBINATION CURB AND GUTTER REMOVAL
29. PROPOSED GUTTER REMOVAL
30. PROPOSED HOT-MIX ASPHALT SURFACE COURSE, 1 1/2"
31. PROPOSED HOT-MIX ASPHALT SURFACE COURSE, 1 1/4"
32. PROPOSED HOT-MIX ASPHALT BINDER COURSE, 2 1/4"
33. PROPOSED GRANULAR MATERIAL, TYPE C
34. PROPOSED HOT-MIX ASPHALT SHOULDER, 8"
35. PROPOSED HOT-MIX ASPHALT SHOULDER, 3 3/4"
36. PROPOSED AGGREGATE WEDGE SHOULDER, TYPE B
37. PROPOSED CONCRETE GUTTER, TYPE B
38. PROPOSED TACK COAT
39. PROPOSED LONGITUDINAL JOINT SEALANT
40. PROPOSED WATERPROOFING MEMBRANE SYSTEM

MODEL: Default
FILE NAME: pw:\\ildot-pw.bentley.com:PWIDOT\Documents\IDOT Offices\District 8\Projects\D876K46\CADData\CADsheets\D876K46-pt-typical.dgn

| | | | |
|---|---|---|---|
| USER NAME = humphreysb | DESIGNED - | REVISED - | |
| | DRAWN - | REVISED - | |
| PLOT SCALE = 40.0000 ' / in. | CHECKED - | REVISED - | |
| PLOT DATE = 5/13/2022 | DATE - | REVISED - | |

**STATE OF ILLINOIS**
**DEPARTMENT OF TRANSPORTATION**

**EXISTING TYPICAL SECTIONS**

SCALE: | SHEET 2 OF 15 SHEETS | STA. 1937+02 TO STA. 1943+35

| **F.A. RTE. | SECTION | COUNTY | TOTAL SHEETS | SHEET NO. |
|---|---|---|---|---|
| ** | (Q-1,X-1,F-1)RS-2, Q-1VBDR-1 | BOND | 113 | 12 |
| **FAU 9832, FAS 1751 | | CONTRACT NO. 76K46 | | |
| | | ILLINOIS FED. AID PROJECT | | |

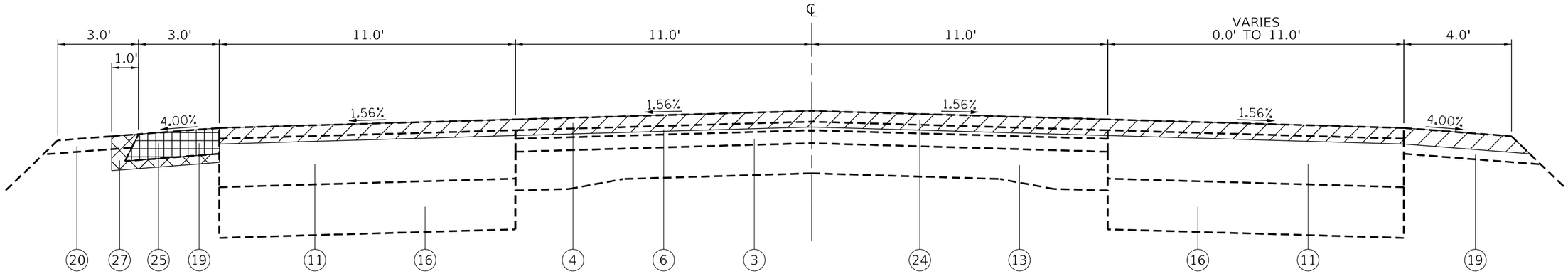


## EXISTING TYPICAL SECTION

## FAU 9832 (US 40)

STA 1943+35 TO STA 1945+75

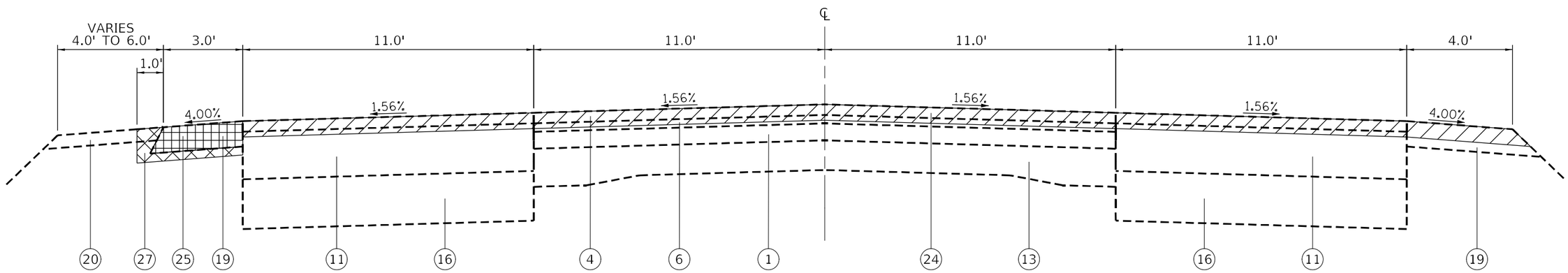


## EXISTING TYPICAL SECTION

## FAU 9832 (US 40)

STA 1945+75 TO STA 1948+02

HMA SURFACE COURSE REMOVAL

PAVEMENT REMOVAL

EXCAVATING AND GRADING EXISTING SHOULDER

PAVED SHOULDER REMOVAL

CURB & GUTTER/ GUTTER REMOVAL

## LEGEND

1. EXISTING BITUMINOUS SURFACE COURSE, 4"
2. EXISTING BITUMINOUS SURFACE COURSE, 3 3/4"
3. EXISTING BITUMINOUS SURFACE COURSE, 3"
4. EXISTING BITUMINOUS SURFACE COURSE, 2 1/2"
5. EXISTING BITUMINOUS SURFACE COURSE, 2 1/4"
6. EXISTING BITUMINOUS SURFACE COURSE, 2"
7. EXISTING BITUMINOUS SURFACE COURSE, 1 1/2"
8. EXISTING BITUMINOUS SURFACE COURSE, 1 1/4"
9. EXISTING BITUMINOUS MICROSURFACING, 1/2"
10. EXISTING BITUMINOUS BINDER COURSE, 12 1/4"
11. EXISTING BITUMINOUS BINDER COURSE, 11 1/4"
12. EXISTING BITUMINOUS LEVELING BINDER, VARIES 2" TO 10"
13. EXISTING P.C.C. PAVEMENT, 9"-7"-9"
14. EXISTING CONCRETE DECK SLAB, 7 1/2"
15. EXISTING SUBBASE GRANULAR MATERIAL, TY C, 4"
16. EXISTING LIME MODIFIED SOIL, 11 3/4"
17. EXISTING LIME MODIFIED SOIL, 10"
18. EXISTING HOT-MIX ASPHALT SHOULDER, 8"
19. EXISTING HOT-MIX ASPHALT SHOULDER, 6"
20. EXISTING AGGREGATE SHOULDERS, TYPE B
21. EXISTING CONCRETE COMBINATION CURB & GUTTER, TYPE B
22. EXISTING CONCRETE GUTTER, TYPE B
23. EXISTING PARTIAL REMAINING CONCRETE CURB & GUTTER
24. PROPOSED HOT-MIX ASPHALT SURFACE REMOVAL, 3 3/4"
25. PROPOSED PAVED SHOULDER REMOVAL
26. PROPOSED PAVEMENT REMOVAL
27. PROPOSED EXCAVATING AND GRADING EXISTING SHOULDER
28. PROPOSED COMBINATION CURB AND GUTTER REMOVAL
29. PROPOSED GUTTER REMOVAL
30. PROPOSED HOT-MIX ASPHALT SURFACE COURSE, 1 1/2"
31. PROPOSED HOT-MIX ASPHALT SURFACE COURSE, 1 1/4"
32. PROPOSED HOT-MIX ASPHALT BINDER COURSE, 2 1/4"
33. PROPOSED GRANULAR MATERIAL, TYPE C
34. PROPOSED HOT-MIX ASPHALT SHOULDER, 8"
35. PROPOSED HOT-MIX ASPHALT SHOULDER, 3 3/4"
36. PROPOSED AGGREGATE WEDGE SHOULDER, TYPE B
37. PROPOSED CONCRETE GUTTER, TYPE B
38. PROPOSED TACK COAT
39. PROPOSED LONGITUDINAL JOINT SEALANT
40. PROPOSED WATERPROOFING MEMBRANE SYSTEM

MODEL: Default
FILE NAME: pw:\\ildot-pw.bentley.com:PWIDOT\Documents\IDOT Offices\District 8\Projects\D876K46\CADData\CADsheets\D876K46-sht-typical.dgn

| | | | |
|---|---|---|---|
| USER NAME = humphreysb | DESIGNED - | REVISED - | STATE OF ILLINOIS DEPARTMENT OF TRANSPORTATION |
| | DRAWN - | REVISED - | |
| PLOT SCALE = 40.0000 ' / in. | CHECKED - | REVISED - | |
| PLOT DATE = 5/13/2022 | DATE - | REVISED - | |

EXISTING TYPICAL SECTIONS

SCALE: | SHEET 3 OF 15 SHEETS | STA. 1943+35 TO STA. 1948+02

| **F.A. RTE. | SECTION | COUNTY | TOTAL SHEETS | SHEET NO. |
|---|---|---|---|---|
| ** | (Q-1,X-1,F-1)RS-2, Q-1VBDR-1 | BOND | 113 | 13 |
| **FAU 9832, FAS 1751 | | CONTRACT NO. 76K46 | | |
| | | ILLINOIS FED. AID PROJECT | | |

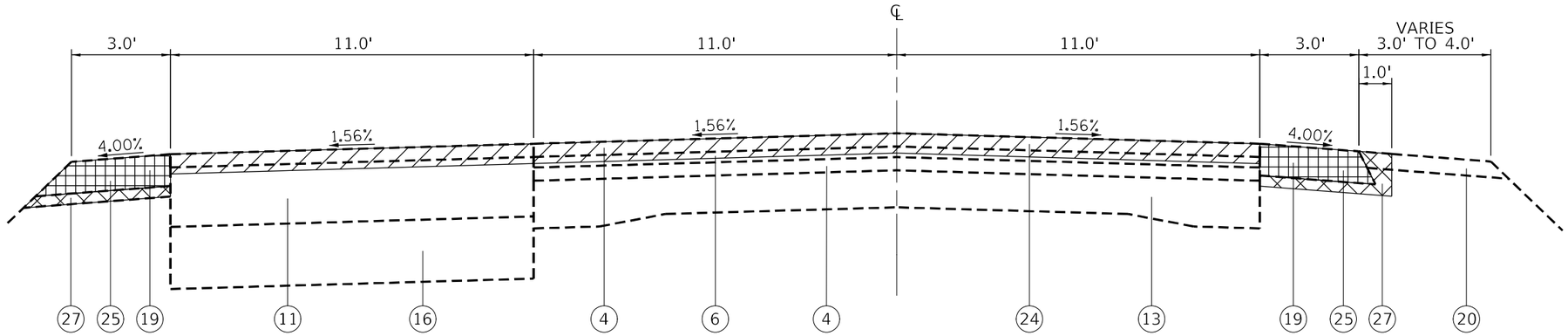


## EXISTING TYPICAL SECTION

## FAU 9832 (US 40)

STA 1948+02 TO STA 1950+71

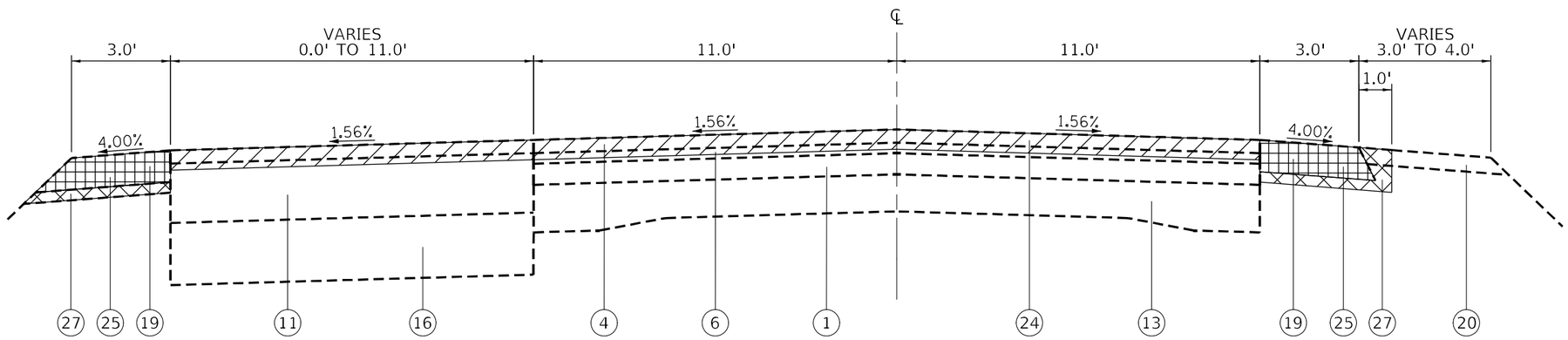


## EXISTING TYPICAL SECTION

## FAU 9832 (US 40)

STA 1950+71 TO STA 1955+93

HMA SURFACE COURSE REMOVAL

PAVEMENT REMOVAL

EXCAVATING AND GRADING EXISTING SHOULDER

PAVED SHOULDER REMOVAL

CURB & GUTTER/ GUTTER REMOVAL

## LEGEND

1. EXISTING BITUMINOUS SURFACE COURSE, 4"
2. EXISTING BITUMINOUS SURFACE COURSE, 3 3/4"
3. EXISTING BITUMINOUS SURFACE COURSE, 3"
4. EXISTING BITUMINOUS SURFACE COURSE, 2 1/2"
5. EXISTING BITUMINOUS SURFACE COURSE, 2 1/4"
6. EXISTING BITUMINOUS SURFACE COURSE, 2"
7. EXISTING BITUMINOUS SURFACE COURSE, 1 1/2"
8. EXISTING BITUMINOUS SURFACE COURSE, 1 1/4"
9. EXISTING BITUMINOUS MICROSURFACING, 1/2"
10. EXISTING BITUMINOUS BINDER COURSE, 12 1/4"
11. EXISTING BITUMINOUS BINDER COURSE, 11 1/4"
12. EXISTING BITUMINOUS LEVELING BINDER, VARIES 2" TO 10"
13. EXISTING P.C.C. PAVEMENT, 9"-7"-9"
14. EXISTING CONCRETE DECK SLAB, 7 1/2"
15. EXISTING SUBBASE GRANULAR MATERIAL, TY C, 4"
16. EXISTING LIME MODIFIED SOIL, 11 3/4"
17. EXISTING LIME MODIFIED SOIL, 10"
18. EXISTING HOT-MIX ASPHALT SHOULDER, 8"
19. EXISTING HOT-MIX ASPHALT SHOULDER, 6"
20. EXISTING AGGREGATE SHOULDERS, TYPE B
21. EXISTING CONCRETE COMBINATION CURB & GUTTER, TYPE B
22. EXISTING CONCRETE GUTTER, TYPE B
23. EXISTING PARTIAL REMAINING CONCRETE CURB & GUTTER
24. PROPOSED HOT-MIX ASPHALT SURFACE REMOVAL, 3 3/4"
25. PROPOSED PAVED SHOULDER REMOVAL
26. PROPOSED PAVEMENT REMOVAL
27. PROPOSED EXCAVATING AND GRADING EXISTING SHOULDER
28. PROPOSED COMBINATION CURB AND GUTTER REMOVAL
29. PROPOSED GUTTER REMOVAL
30. PROPOSED HOT-MIX ASPHALT SURFACE COURSE, 1 1/2"
31. PROPOSED HOT-MIX ASPHALT SURFACE COURSE, 1 1/4"
32. PROPOSED HOT-MIX ASPHALT BINDER COURSE, 2 1/4"
33. PROPOSED GRANULAR MATERIAL, TYPE C
34. PROPOSED HOT-MIX ASPHALT SHOULDER, 8"
35. PROPOSED HOT-MIX ASPHALT SHOULDER, 3 3/4"
36. PROPOSED AGGREGATE WEDGE SHOULDER, TYPE B
37. PROPOSED CONCRETE GUTTER, TYPE B
38. PROPOSED TACK COAT
39. PROPOSED LONGITUDINAL JOINT SEALANT
40. PROPOSED WATERPROOFING MEMBRANE SYSTEM

MODEL: Default
FILE NAME: pw:\\ildot-pw.bentley.com:PWIDOT\Documents\IDOT Offices\District 8\Projects\D876K46\CADData\CADsheets\D876K46-sht-typical.dgn

| | | | |
|---|---|---|---|
| USER NAME = humphreysb | DESIGNED - | REVISED - | STATE OF ILLINOIS DEPARTMENT OF TRANSPORTATION |
| | DRAWN - | REVISED - | |
| PLOT SCALE = 40.0000 ' / in. | CHECKED - | REVISED - | |
| PLOT DATE = 5/13/2022 | DATE - | REVISED - | |

**EXISTING TYPICAL SECTIONS**

SCALE: | SHEET 4 OF 15 SHEETS | STA. 1948+02 TO STA. 1955+93

| **F.A. RTE. | SECTION | COUNTY | TOTAL SHEETS | SHEET NO. |
|---|---|---|---|---|
| ** | (Q-1,X-1,F-1)RS-2, Q-1VBDR-1 | BOND | 113 | 14 |
| **FAU 9832, FAS 1751 | | CONTRACT NO. 76K46 | | |
| | | ILLINOIS | FED. AID PROJECT | |

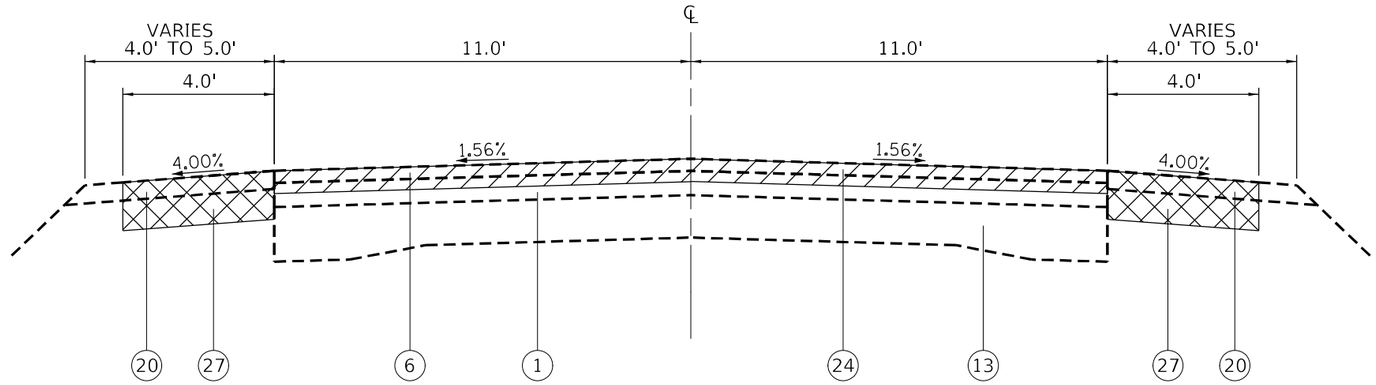


## EXISTING TYPICAL SECTION
## FAU 9832 (US 40)

STA 1955+93 TO STA 1985+09

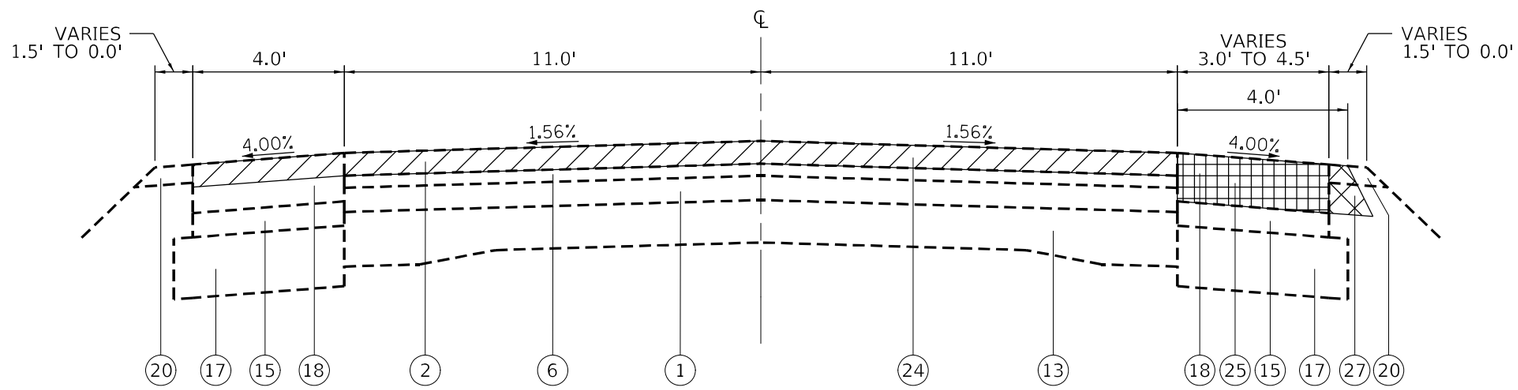


## EXISTING TYPICAL SECTION
## FAU 9832 (US 40)

STA 1985+09 TO STA 1986+09

HMA SURFACE COURSE REMOVAL

PAVEMENT REMOVAL

EXCAVATING AND GRADING EXISTING SHOULDER

PAVED SHOULDER REMOVAL

CURB & GUTTER/ GUTTER REMOVAL

## LEGEND

1. EXISTING BITUMINOUS SURFACE COURSE, 4"
2. EXISTING BITUMINOUS SURFACE COURSE, 3 3/4"
3. EXISTING BITUMINOUS SURFACE COURSE, 3"
4. EXISTING BITUMINOUS SURFACE COURSE, 2 1/2"
5. EXISTING BITUMINOUS SURFACE COURSE, 2 1/4"
6. EXISTING BITUMINOUS SURFACE COURSE, 2"
7. EXISTING BITUMINOUS SURFACE COURSE, 1 1/2"
8. EXISTING BITUMINOUS SURFACE COURSE, 1 1/4"
9. EXISTING BITUMINOUS MICROSURFACING, 1/2"
10. EXISTING BITUMINOUS BINDER COURSE, 12 1/4"
11. EXISTING BITUMINOUS BINDER COURSE, 11 1/4"
12. EXISTING BITUMINOUS LEVELING BINDER, VARIES 2" TO 10"
13. EXISTING P.C.C. PAVEMENT, 9"-7"-9"
14. EXISTING CONCRETE DECK SLAB, 7 1/2"
15. EXISTING SUBBASE GRANULAR MATERIAL, TY C, 4"
16. EXISTING LIME MODIFIED SOIL, 11 3/4"
17. EXISTING LIME MODIFIED SOIL, 10"
18. EXISTING HOT-MIX ASPHALT SHOULDER, 8"
19. EXISTING HOT-MIX ASPHALT SHOULDER, 6"
20. EXISTING AGGREGATE SHOULDERS, TYPE B
21. EXISTING CONCRETE COMBINATION CURB & GUTTER, TYPE B
22. EXISTING CONCRETE GUTTER, TYPE B
23. EXISTING PARTIAL REMAINING CONCRETE CURB & GUTTER
24. PROPOSED HOT-MIX ASPHALT SURFACE REMOVAL, 3 3/4"
25. PROPOSED PAVED SHOULDER REMOVAL
26. PROPOSED PAVEMENT REMOVAL
27. PROPOSED EXCAVATING AND GRADING EXISTING SHOULDER
28. PROPOSED COMBINATION CURB AND GUTTER REMOVAL
29. PROPOSED GUTTER REMOVAL
30. PROPOSED HOT-MIX ASPHALT SURFACE COURSE, 1 1/2"
31. PROPOSED HOT-MIX ASPHALT SURFACE COURSE, 1 1/4"
32. PROPOSED HOT-MIX ASPHALT BINDER COURSE, 2 1/4"
33. PROPOSED GRANULAR MATERIAL, TYPE C
34. PROPOSED HOT-MIX ASPHALT SHOULDER, 8"
35. PROPOSED HOT-MIX ASPHALT SHOULDER, 3 3/4"
36. PROPOSED AGGREGATE WEDGE SHOULDER, TYPE B
37. PROPOSED CONCRETE GUTTER, TYPE B
38. PROPOSED TACK COAT
39. PROPOSED LONGITUDINAL JOINT SEALANT
40. PROPOSED WATERPROOFING MEMBRANE SYSTEM

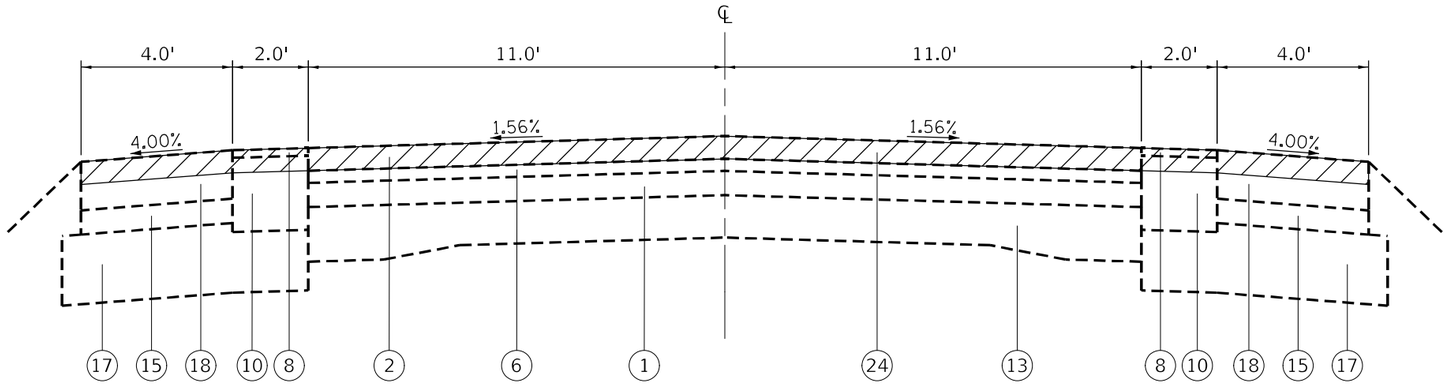


## EXISTING TYPICAL SECTION

## FAU 9832 (US 40)

STA 1986+09 TO STA 1986+69

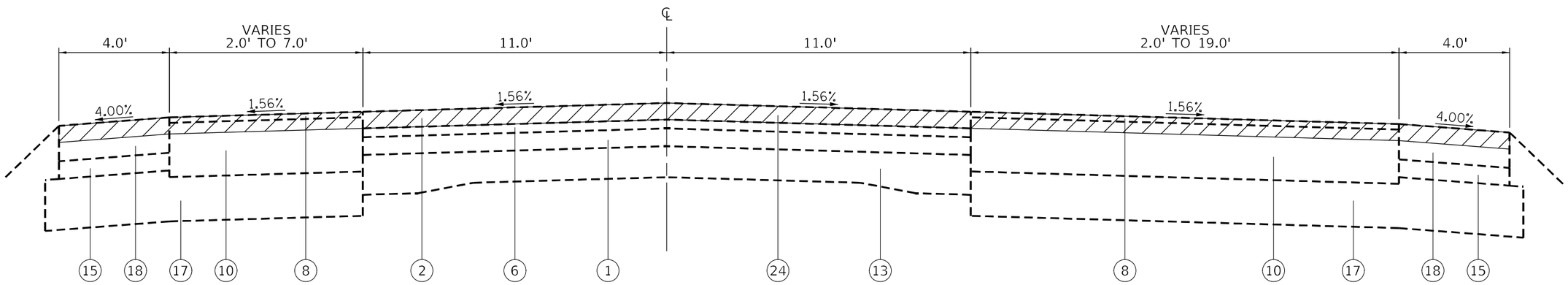


## EXISTING TYPICAL SECTION

## FAU 9832 (US 40)

STA 1986+69 TO STA 1989+09

HMA SURFACE COURSE REMOVAL

PAVEMENT REMOVAL

PAVED SHOULDER REMOVAL

CURB & GUTTER/ GUTTER REMOVAL

EXCAVATING AND GRADING EXISTING SHOULDER

## LEGEND

1. EXISTING BITUMINOUS SURFACE COURSE, 4"
2. EXISTING BITUMINOUS SURFACE COURSE, 3 3/4"
3. EXISTING BITUMINOUS SURFACE COURSE, 3"
4. EXISTING BITUMINOUS SURFACE COURSE, 2 1/2"
5. EXISTING BITUMINOUS SURFACE COURSE, 2 1/4"
6. EXISTING BITUMINOUS SURFACE COURSE, 2"
7. EXISTING BITUMINOUS SURFACE COURSE, 1 1/2"
8. EXISTING BITUMINOUS SURFACE COURSE, 1 1/4"
9. EXISTING BITUMINOUS MICROSURFACING, 1/2"
10. EXISTING BITUMINOUS BINDER COURSE, 12 1/4"
11. EXISTING BITUMINOUS BINDER COURSE, 11 1/4"
12. EXISTING BITUMINOUS LEVELING BINDER, VARIES 2" TO 10"
13. EXISTING P.C.C. PAVEMENT, 9"-7"-9"
14. EXISTING CONCRETE DECK SLAB, 7 1/2"
15. EXISTING SUBBASE GRANULAR MATERIAL, TY C, 4"
16. EXISTING LIME MODIFIED SOIL, 11 3/4"
17. EXISTING LIME MODIFIED SOIL, 10"
18. EXISTING HOT-MIX ASPHALT SHOULDER, 8"
19. EXISTING HOT-MIX ASPHALT SHOULDER, 6"
20. EXISTING AGGREGATE SHOULDERS, TYPE B
21. EXISTING CONCRETE COMBINATION CURB & GUTTER, TYPE B
22. EXISTING CONCRETE GUTTER, TYPE B
23. EXISTING PARTIAL REMAINING CONCRETE CURB & GUTTER
24. PROPOSED HOT-MIX ASPHALT SURFACE REMOVAL, 3 3/4"
25. PROPOSED PAVED SHOULDER REMOVAL
26. PROPOSED PAVEMENT REMOVAL
27. PROPOSED EXCAVATING AND GRADING EXISTING SHOULDER
28. PROPOSED COMBINATION CURB AND GUTTER REMOVAL
29. PROPOSED GUTTER REMOVAL
30. PROPOSED HOT-MIX ASPHALT SURFACE COURSE, 1 1/2"
31. PROPOSED HOT-MIX ASPHALT SURFACE COURSE, 1 1/4"
32. PROPOSED HOT-MIX ASPHALT BINDER COURSE, 2 1/4"
33. PROPOSED GRANULAR MATERIAL, TYPE C
34. PROPOSED HOT-MIX ASPHALT SHOULDER, 8"
35. PROPOSED HOT-MIX ASPHALT SHOULDER, 3 3/4"
36. PROPOSED AGGREGATE WEDGE SHOULDER, TYPE B
37. PROPOSED CONCRETE GUTTER, TYPE B
38. PROPOSED TACK COAT
39. PROPOSED LONGITUDINAL JOINT SEALANT
40. PROPOSED WATERPROOFING MEMBRANE SYSTEM

MODEL: Default
FILE NAME: pw:\\ildot-pw.bentley.com:PWIDOT\Documents\IDOT Offices\District 8\Projects\D876K46\CADData\CADsheets\D876K46-sht-typical.dgn

| | | | |
|---|---|---|---|
| USER NAME = humphreysb | DESIGNED - | REVISED - | STATE OF ILLINOIS DEPARTMENT OF TRANSPORTATION |
| | DRAWN - | REVISED - | |
| PLOT SCALE = 40.0000 ' / in. | CHECKED - | REVISED - | |
| PLOT DATE = 5/13/2022 | DATE - | REVISED - | |

EXISTING TYPICAL SECTIONS

SCALE: | SHEET 6 OF 15 SHEETS | STA. 1986+09 TO STA. 1989+09

| **F.A. RTE. | SECTION | COUNTY | TOTAL SHEETS | SHEET NO. |
|---|---|---|---|---|
| ** | (Q-1,X-1,F-1)RS-2, Q-1VBDR-1 | BOND | 113 | 16 |
| **FAU 9832, FAS 1751 | | CONTRACT NO. 76K46 | | |
| | | ILLINOIS FED. AID PROJECT | | |

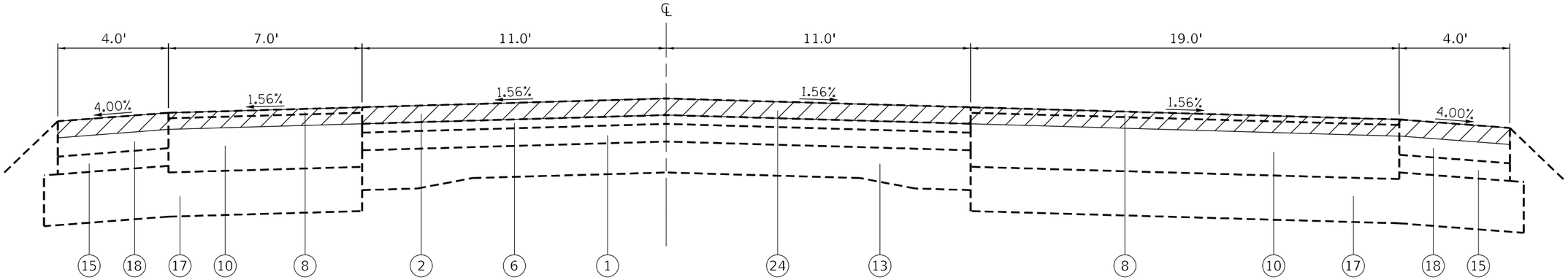


## EXISTING TYPICAL SECTION
## FAU 9832 (US 40)

STA 1989+09 TO STA 1992+13

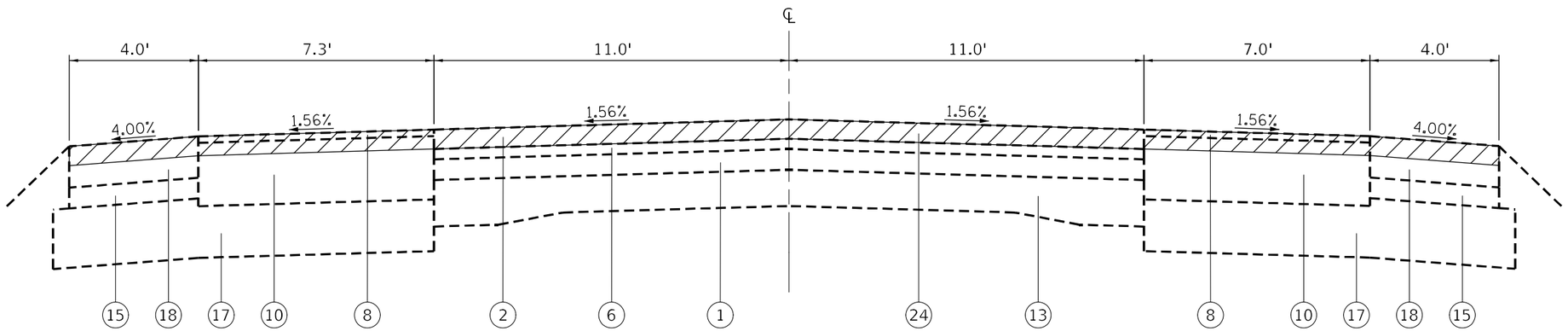


## EXISTING TYPICAL SECTION
## FAU 9832 (US 40)

STA 1992+13 TO STA 1997+15

HMA SURFACE COURSE REMOVAL

PAVEMENT REMOVAL

PAVED SHOULDER REMOVAL

CURB & GUTTER/ GUTTER REMOVAL

EXCAVATING AND GRADING EXISTING SHOULDER

## LEGEND

1. EXISTING BITUMINOUS SURFACE COURSE, 4"
2. EXISTING BITUMINOUS SURFACE COURSE, 3 3/4"
3. EXISTING BITUMINOUS SURFACE COURSE, 3"
4. EXISTING BITUMINOUS SURFACE COURSE, 2 1/2"
5. EXISTING BITUMINOUS SURFACE COURSE, 2 1/4"
6. EXISTING BITUMINOUS SURFACE COURSE, 2"
7. EXISTING BITUMINOUS SURFACE COURSE, 1 1/2"
8. EXISTING BITUMINOUS SURFACE COURSE, 1 1/4"
9. EXISTING BITUMINOUS MICROSURFACING, 1/2"
10. EXISTING BITUMINOUS BINDER COURSE, 12 1/4"
11. EXISTING BITUMINOUS BINDER COURSE, 11 1/4"
12. EXISTING BITUMINOUS LEVELING BINDER, VARIES 2" TO 10"
13. EXISTING P.C.C. PAVEMENT, 9"-7"-9"
14. EXISTING CONCRETE DECK SLAB, 7 1/2"
15. EXISTING SUBBASE GRANULAR MATERIAL, TY C, 4"
16. EXISTING LIME MODIFIED SOIL, 11 3/4"
17. EXISTING LIME MODIFIED SOIL, 10"
18. EXISTING HOT-MIX ASPHALT SHOULDER, 8"
19. EXISTING HOT-MIX ASPHALT SHOULDER, 6"
20. EXISTING AGGREGATE SHOULDERS, TYPE B
21. EXISTING CONCRETE COMBINATION CURB & GUTTER, TYPE B
22. EXISTING CONCRETE GUTTER, TYPE B
23. EXISTING PARTIAL REMAINING CONCRETE CURB & GUTTER
24. PROPOSED HOT-MIX ASPHALT SURFACE REMOVAL, 3 3/4"
25. PROPOSED PAVED SHOULDER REMOVAL
26. PROPOSED PAVEMENT REMOVAL
27. PROPOSED EXCAVATING AND GRADING EXISTING SHOULDER
28. PROPOSED COMBINATION CURB AND GUTTER REMOVAL
29. PROPOSED GUTTER REMOVAL
30. PROPOSED HOT-MIX ASPHALT SURFACE COURSE, 1 1/2"
31. PROPOSED HOT-MIX ASPHALT SURFACE COURSE, 1 1/4"
32. PROPOSED HOT-MIX ASPHALT BINDER COURSE, 2 1/4"
33. PROPOSED GRANULAR MATERIAL, TYPE C
34. PROPOSED HOT-MIX ASPHALT SHOULDER, 8"
35. PROPOSED HOT-MIX ASPHALT SHOULDER, 3 3/4"
36. PROPOSED AGGREGATE WEDGE SHOULDER, TYPE B
37. PROPOSED CONCRETE GUTTER, TYPE B
38. PROPOSED TACK COAT
39. PROPOSED LONGITUDINAL JOINT SEALANT
40. PROPOSED WATERPROOFING MEMBRANE SYSTEM

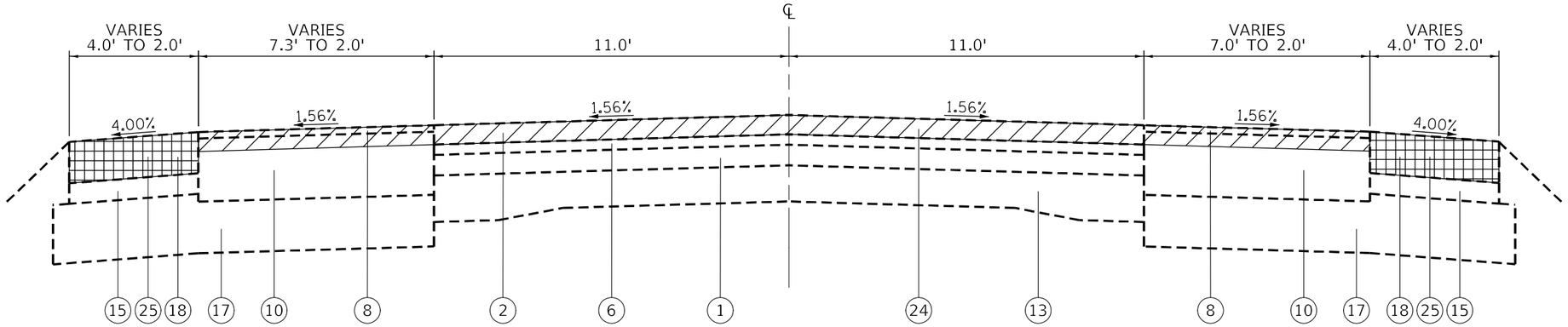


## EXISTING TYPICAL SECTION

## FAU 9832 (US 40)

STA 1997+15 TO STA 2000+15

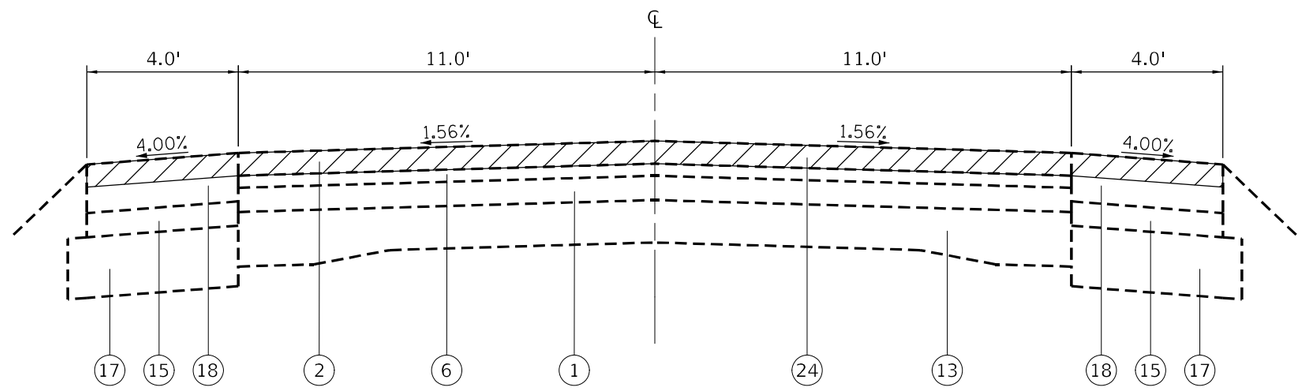


## EXISTING TYPICAL SECTION

## FAU 9832 (US 40)

STA 2000+15 TO STA 2001+15

HMA SURFACE COURSE REMOVAL

PAVEMENT REMOVAL

PAVED SHOULDER REMOVAL

CURB & GUTTER/ GUTTER REMOVAL

EXCAVATING AND GRADING EXISTING SHOULDER

## LEGEND

1. EXISTING BITUMINOUS SURFACE COURSE, 4"
2. EXISTING BITUMINOUS SURFACE COURSE, 3 3/4"
3. EXISTING BITUMINOUS SURFACE COURSE, 3"
4. EXISTING BITUMINOUS SURFACE COURSE, 2 1/2"
5. EXISTING BITUMINOUS SURFACE COURSE, 2 1/4"
6. EXISTING BITUMINOUS SURFACE COURSE, 2"
7. EXISTING BITUMINOUS SURFACE COURSE, 1 1/2"
8. EXISTING BITUMINOUS SURFACE COURSE, 1 1/4"
9. EXISTING BITUMINOUS MICROSURFACING, 1/2"
10. EXISTING BITUMINOUS BINDER COURSE, 12 1/4"
11. EXISTING BITUMINOUS BINDER COURSE, 11 1/4"
12. EXISTING BITUMINOUS LEVELING BINDER, VARIES 2" TO 10"
13. EXISTING P.C.C. PAVEMENT, 9"-7"-9"
14. EXISTING CONCRETE DECK SLAB, 7 1/2"
15. EXISTING SUBBASE GRANULAR MATERIAL, TY C, 4"
16. EXISTING LIME MODIFIED SOIL, 11 3/4"
17. EXISTING LIME MODIFIED SOIL, 10"
18. EXISTING HOT-MIX ASPHALT SHOULDER, 8"
19. EXISTING HOT-MIX ASPHALT SHOULDER, 6"
20. EXISTING AGGREGATE SHOULDERS, TYPE B
21. EXISTING CONCRETE COMBINATION CURB & GUTTER, TYPE B
22. EXISTING CONCRETE GUTTER, TYPE B
23. EXISTING PARTIAL REMAINING CONCRETE CURB & GUTTER
24. PROPOSED HOT-MIX ASPHALT SURFACE REMOVAL, 3 3/4"
25. PROPOSED PAVED SHOULDER REMOVAL
26. PROPOSED PAVEMENT REMOVAL
27. PROPOSED EXCAVATING AND GRADING EXISTING SHOULDER
28. PROPOSED COMBINATION CURB AND GUTTER REMOVAL
29. PROPOSED GUTTER REMOVAL
30. PROPOSED HOT-MIX ASPHALT SURFACE COURSE, 1 1/2"
31. PROPOSED HOT-MIX ASPHALT SURFACE COURSE, 1 1/4"
32. PROPOSED HOT-MIX ASPHALT BINDER COURSE, 2 1/4"
33. PROPOSED GRANULAR MATERIAL, TYPE C
34. PROPOSED HOT-MIX ASPHALT SHOULDER, 8"
35. PROPOSED HOT-MIX ASPHALT SHOULDER, 3 3/4"
36. PROPOSED AGGREGATE WEDGE SHOULDER, TYPE B
37. PROPOSED CONCRETE GUTTER, TYPE B
38. PROPOSED TACK COAT
39. PROPOSED LONGITUDINAL JOINT SEALANT
40. PROPOSED WATERPROOFING MEMBRANE SYSTEM

MODEL: Default
FILE NAME: pw:\\ildot-pw.bentley.com:PWIDOT\Documents\IDOT Offices\District 8\Project\D876K46\CADData\CADsheets\D876K46-sht2-typical.dgn

| | | | |
|---|---|---|---|
| USER NAME = humphreysb | DESIGNED - | REVISED - | STATE OF ILLINOIS DEPARTMENT OF TRANSPORTATION |
| | DRAWN - | REVISED - | |
| PLOT SCALE = 40.0000 ' / in. | CHECKED - | REVISED - | |
| PLOT DATE = 5/13/2022 | DATE - | REVISED - | |

**EXISTING TYPICAL SECTIONS**

SCALE: | SHEET 8 OF 15 SHEETS | STA. 1997+15 TO STA. 2001+15

| **F.A. RTE. | SECTION | COUNTY | TOTAL SHEETS | SHEET NO. |
|---|---|---|---|---|
| ** | (Q-1,X-1,F-1)RS-2, Q-1VBDR-1 | BOND | 113 | 18 |
| **FAU 9832, FAS 1751 | | CONTRACT NO. 76K46 | | |
| | | ILLINOIS FED. AID PROJECT | | |

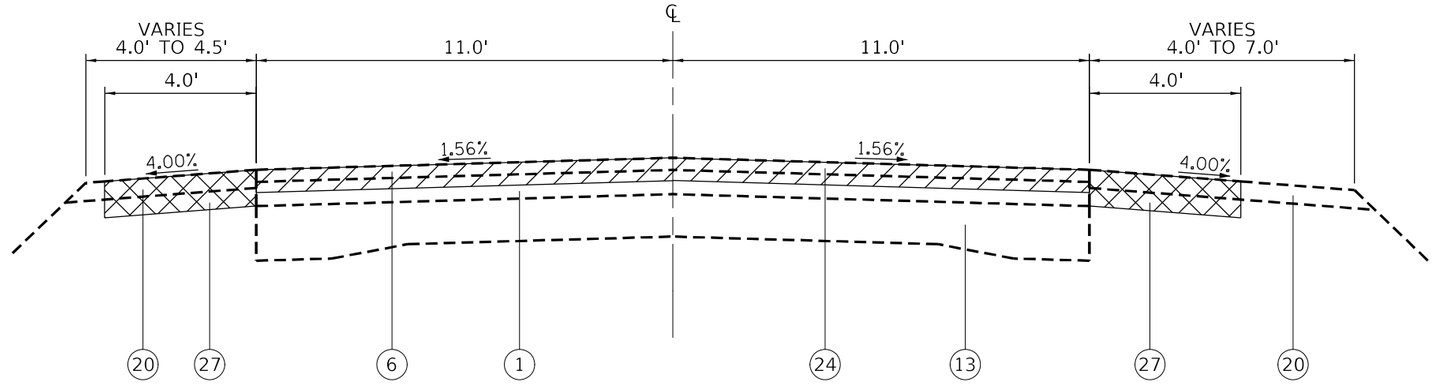


## EXISTING TYPICAL SECTION
## FAS 1751 (US 40)

STA 2001+15 TO STA 2086+00

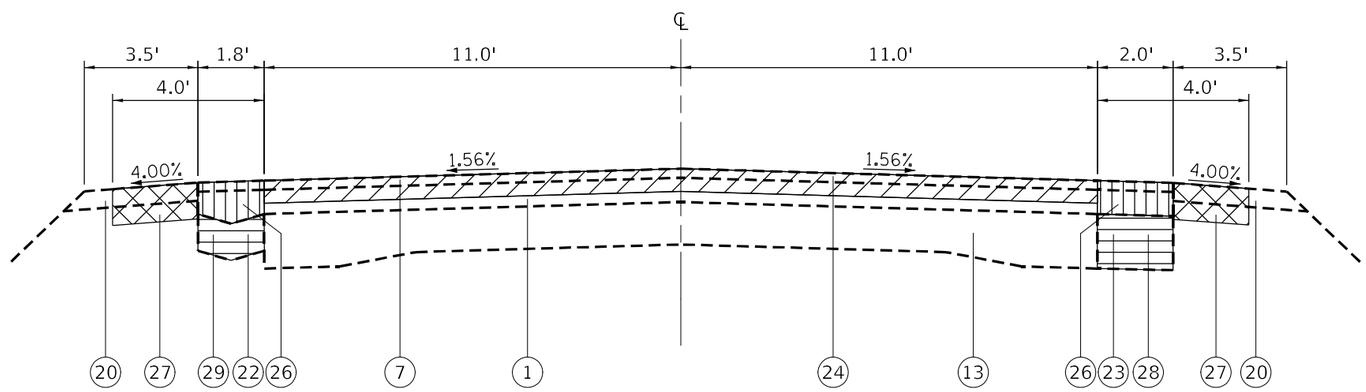


## EXISTING TYPICAL SECTION
## FAS 1751 (US 40)

STA 2086+00 TO STA 2094+41
STA 2099+96 TO STA 2102+28

HMA SURFACE COURSE REMOVAL

PAVEMENT REMOVAL

EXCAVATING AND GRADING EXISTING SHOULDER

PAVED SHOULDER REMOVAL

CURB & GUTTER/ GUTTER REMOVAL

## LEGEND

1. EXISTING BITUMINOUS SURFACE COURSE, 4"
2. EXISTING BITUMINOUS SURFACE COURSE, 3 3/4"
3. EXISTING BITUMINOUS SURFACE COURSE, 3"
4. EXISTING BITUMINOUS SURFACE COURSE, 2 1/2"
5. EXISTING BITUMINOUS SURFACE COURSE, 2 1/4"
6. EXISTING BITUMINOUS SURFACE COURSE, 2"
7. EXISTING BITUMINOUS SURFACE COURSE, 1 1/2"
8. EXISTING BITUMINOUS SURFACE COURSE, 1 1/4"
9. EXISTING BITUMINOUS MICROSURFACING, 1/2"
10. EXISTING BITUMINOUS BINDER COURSE, 12 1/4"
11. EXISTING BITUMINOUS BINDER COURSE, 11 1/4"
12. EXISTING BITUMINOUS LEVELING BINDER, VARIES 2" TO 10"
13. EXISTING P.C.C. PAVEMENT, 9"-7"-9"
14. EXISTING CONCRETE DECK SLAB, 7 1/2"
15. EXISTING SUBBASE GRANULAR MATERIAL, TY C, 4"
16. EXISTING LIME MODIFIED SOIL, 11 3/4"
17. EXISTING LIME MODIFIED SOIL, 10"
18. EXISTING HOT-MIX ASPHALT SHOULDER, 8"
19. EXISTING HOT-MIX ASPHALT SHOULDER, 6"
20. EXISTING AGGREGATE SHOULDERS, TYPE B
21. EXISTING CONCRETE COMBINATION CURB & GUTTER, TYPE B
22. EXISTING CONCRETE GUTTER, TYPE B
23. EXISTING PARTIAL REMAINING CONCRETE CURB & GUTTER
24. PROPOSED HOT-MIX ASPHALT SURFACE REMOVAL, 3 3/4"
25. PROPOSED PAVED SHOULDER REMOVAL
26. PROPOSED PAVEMENT REMOVAL
27. PROPOSED EXCAVATING AND GRADING EXISTING SHOULDER
28. PROPOSED COMBINATION CURB AND GUTTER REMOVAL
29. PROPOSED GUTTER REMOVAL
30. PROPOSED HOT-MIX ASPHALT SURFACE COURSE, 1 1/2"
31. PROPOSED HOT-MIX ASPHALT SURFACE COURSE, 1 1/4"
32. PROPOSED HOT-MIX ASPHALT BINDER COURSE, 2 1/4"
33. PROPOSED GRANULAR MATERIAL, TYPE C
34. PROPOSED HOT-MIX ASPHALT SHOULDER, 8"
35. PROPOSED HOT-MIX ASPHALT SHOULDER, 3 3/4"
36. PROPOSED AGGREGATE WEDGE SHOULDER, TYPE B
37. PROPOSED CONCRETE GUTTER, TYPE B
38. PROPOSED TACK COAT
39. PROPOSED LONGITUDINAL JOINT SEALANT
40. PROPOSED WATERPROOFING MEMBRANE SYSTEM

MODEL: Default
FILE NAME: pw:\\ildot-pw.bentley.com:PWIDOT\Documents\IDOT Offices\District 8\Project\D876K46\CADData\CADsheets\D876K46-sht-typical.dgn

| | | | |
|---|---|---|---|
| USER NAME = humphreysb | DESIGNED - | REVISED - | |
| | DRAWN - | REVISED - | |
| PLOT SCALE = 40.0000 ' / in. | CHECKED - | REVISED - | |
| PLOT DATE = 5/13/2022 | DATE - | REVISED - | |

**STATE OF ILLINOIS**
**DEPARTMENT OF TRANSPORTATION**

**EXISTING TYPICAL SECTIONS**

SCALE: | SHEET 9 OF 15 SHEETS | STA. 2001+15 TO STA. 2102+28

| **F.A. RTE. | SECTION | COUNTY | TOTAL SHEETS | SHEET NO. |
|---|---|---|---|---|
| ** | (Q-1,X-1,F-1)RS-2, Q-1VBDR-1 | BOND | 113 | 19 |
| **FAU 9832, FAS 1751 | | CONTRACT NO. 76K46 | | |
| | | ILLINOIS | FED. AID PROJECT | |

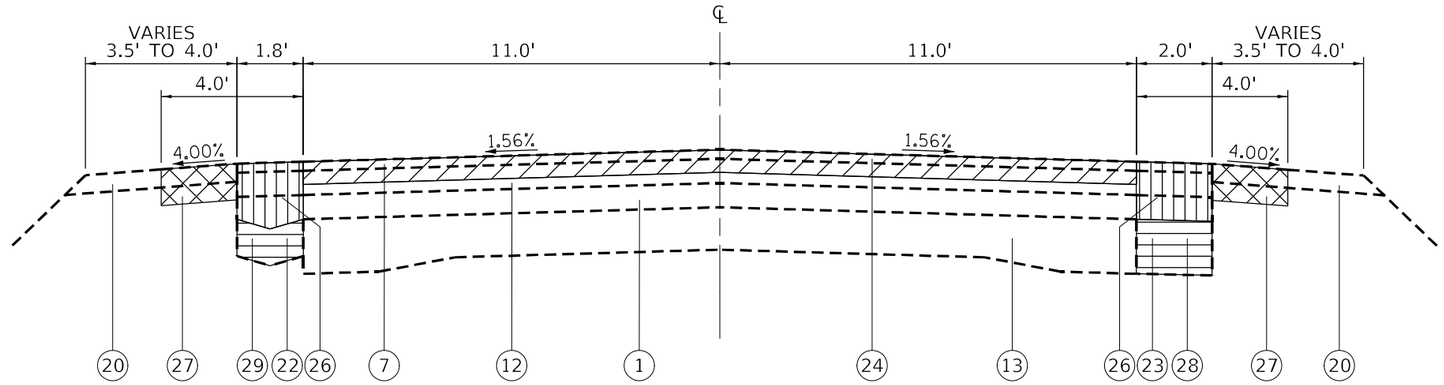


## EXISTING TYPICAL SECTION
## FAS 1751 (US 40)

STA 2094+41 TO STA 2097+16

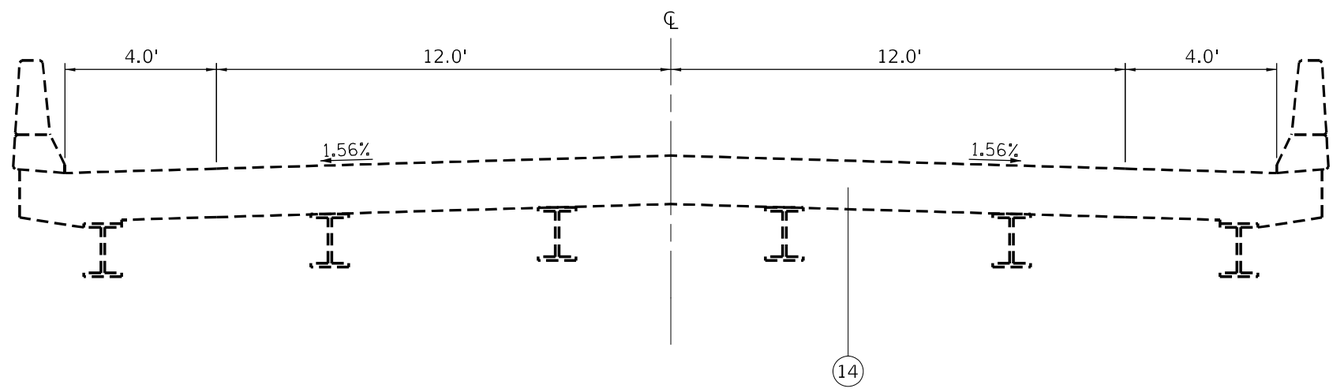


## EXISTING TYPICAL SECTION
## S.N. 003–0018: FAS 1751 (US 40)

STA 2097+16 TO STA 2099+96

## LEGEND

1. EXISTING BITUMINOUS SURFACE COURSE, 4"
2. EXISTING BITUMINOUS SURFACE COURSE, 3 3/4"
3. EXISTING BITUMINOUS SURFACE COURSE, 3"
4. EXISTING BITUMINOUS SURFACE COURSE, 2 1/2"
5. EXISTING BITUMINOUS SURFACE COURSE, 2 1/4"
6. EXISTING BITUMINOUS SURFACE COURSE, 2"
7. EXISTING BITUMINOUS SURFACE COURSE, 1 1/2"
8. EXISTING BITUMINOUS SURFACE COURSE, 1 1/4"
9. EXISTING BITUMINOUS MICROSURFACING, 1/2"
10. EXISTING BITUMINOUS BINDER COURSE, 12 1/4"
11. EXISTING BITUMINOUS BINDER COURSE, 11 1/4"
12. EXISTING BITUMINOUS LEVELING BINDER, VARIES 2" TO 10"
13. EXISTING P.C.C. PAVEMENT, 9"-7"-9"
14. EXISTING CONCRETE DECK SLAB, 7 1/2"
15. EXISTING SUBBASE GRANULAR MATERIAL, TY C, 4"
16. EXISTING LIME MODIFIED SOIL, 11 3/4"
17. EXISTING LIME MODIFIED SOIL, 10"
18. EXISTING HOT-MIX ASPHALT SHOULDER, 8"
19. EXISTING HOT-MIX ASPHALT SHOULDER, 6"
20. EXISTING AGGREGATE SHOULDERS, TYPE B
21. EXISTING CONCRETE COMBINATION CURB & GUTTER, TYPE B
22. EXISTING CONCRETE GUTTER, TYPE B
23. EXISTING PARTIAL REMAINING CONCRETE CURB & GUTTER
24. PROPOSED HOT-MIX ASPHALT SURFACE REMOVAL, 3 3/4"
25. PROPOSED PAVED SHOULDER REMOVAL
26. PROPOSED PAVEMENT REMOVAL
27. PROPOSED EXCAVATING AND GRADING EXISTING SHOULDER
28. PROPOSED COMBINATION CURB AND GUTTER REMOVAL
29. PROPOSED GUTTER REMOVAL
30. PROPOSED HOT-MIX ASPHALT SURFACE COURSE, 1 1/2"
31. PROPOSED HOT-MIX ASPHALT SURFACE COURSE, 1 1/4"
32. PROPOSED HOT-MIX ASPHALT BINDER COURSE, 2 1/4"
33. PROPOSED GRANULAR MATERIAL, TYPE C
34. PROPOSED HOT-MIX ASPHALT SHOULDER, 8"
35. PROPOSED HOT-MIX ASPHALT SHOULDER, 3 3/4"
36. PROPOSED AGGREGATE WEDGE SHOULDER, TYPE B
37. PROPOSED CONCRETE GUTTER, TYPE B
38. PROPOSED TACK COAT
39. PROPOSED LONGITUDINAL JOINT SEALANT
40. PROPOSED WATERPROOFING MEMBRANE SYSTEM

HMA SURFACE COURSE REMOVAL

PAVEMENT REMOVAL

EXCAVATING AND GRADING EXISTING SHOULDER

PAVED SHOULDER REMOVAL

CURB & GUTTER/ GUTTER REMOVAL

MODEL: Default
FILE NAME: pw:\\ildot-pw.bentley.com:PWIDOT\Documents\IDOT Offices\District 8\Projects\D876K46\CADData\CADsheets\D876K46-sht-typical.dgn

| | | | |
|---|---|---|---|
| USER NAME = humphreysb | DESIGNED - | REVISED - | |
| | DRAWN - | REVISED - | |
| PLOT SCALE = 40.0000 ' / in. | CHECKED - | REVISED - | |
| PLOT DATE = 5/13/2022 | DATE - | REVISED - | |

**STATE OF ILLINOIS**
**DEPARTMENT OF TRANSPORTATION**

**EXISTING TYPICAL SECTIONS**

SCALE: | SHEET 10 OF 15 SHEETS | STA. 2094+41 TO STA. 2109+86

| **F.A. RTE. | SECTION | COUNTY | TOTAL SHEETS | SHEET NO. |
|---|---|---|---|---|
| ** | (Q-1,X-1,F-1)RS-2, Q-1VBDR-1 | BOND | 113 | 20 |
| **FAU 9832, FAS 1751 | | CONTRACT NO. 76K46 | | |
| | | ILLINOIS | FED. AID PROJECT | |

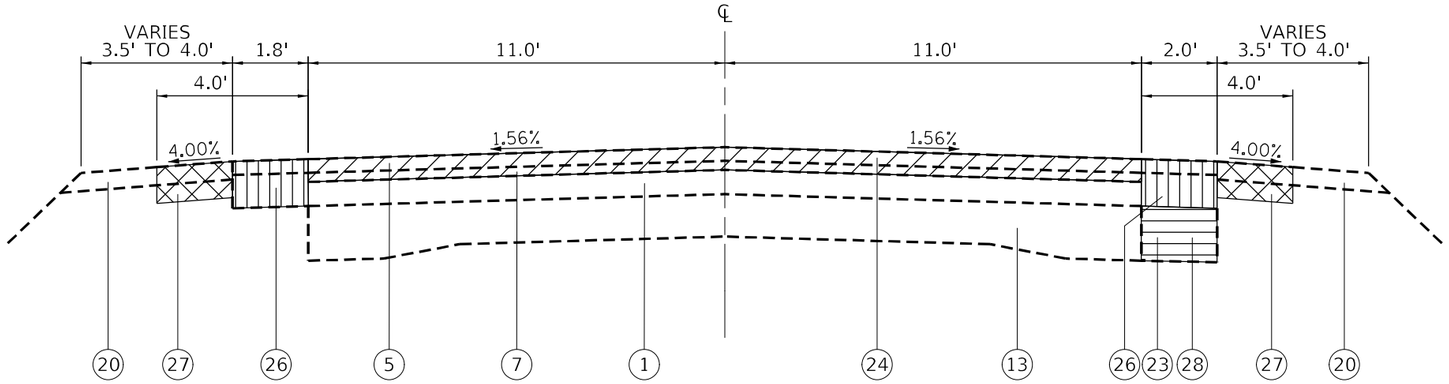


## EXISTING TYPICAL SECTION
## FAS 1751 (US 40)

STA 2102+28 TO STA 2105+03
STA 2107+16 TO STA 2109+86

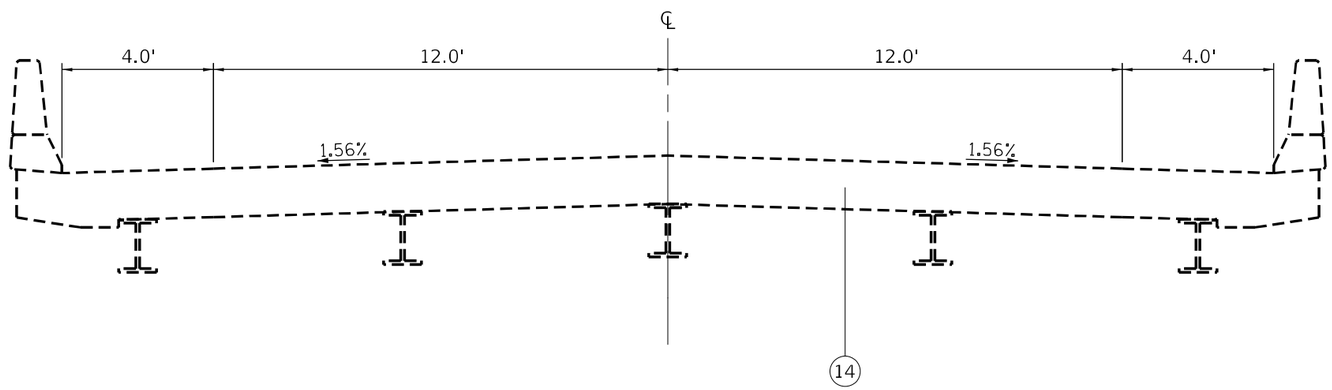


## EXISTING TYPICAL SECTION
## S.N. 003–0019: FAS 1751 (US 40)

STA 2105+03 TO STA 2106+58

HMA SURFACE COURSE REMOVAL

PAVEMENT REMOVAL

EXCAVATING AND GRADING EXISTING SHOULDER

PAVED SHOULDER REMOVAL

CURB & GUTTER/ GUTTER REMOVAL

## LEGEND

1. EXISTING BITUMINOUS SURFACE COURSE, 4"
2. EXISTING BITUMINOUS SURFACE COURSE, 3 3/4"
3. EXISTING BITUMINOUS SURFACE COURSE, 3"
4. EXISTING BITUMINOUS SURFACE COURSE, 2 1/2"
5. EXISTING BITUMINOUS SURFACE COURSE, 2 1/4"
6. EXISTING BITUMINOUS SURFACE COURSE, 2"
7. EXISTING BITUMINOUS SURFACE COURSE, 1 1/2"
8. EXISTING BITUMINOUS SURFACE COURSE, 1 1/4"
9. EXISTING BITUMINOUS MICROSURFACING, 1/2"
10. EXISTING BITUMINOUS BINDER COURSE, 12 1/4"
11. EXISTING BITUMINOUS BINDER COURSE, 11 1/4"
12. EXISTING BITUMINOUS LEVELING BINDER, VARIES 2" TO 10"
13. EXISTING P.C.C. PAVEMENT, 9"-7"-9"
14. EXISTING CONCRETE DECK SLAB, 7 1/2"
15. EXISTING SUBBASE GRANULAR MATERIAL, TY C, 4"
16. EXISTING LIME MODIFIED SOIL, 11 3/4"
17. EXISTING LIME MODIFIED SOIL, 10"
18. EXISTING HOT-MIX ASPHALT SHOULDER, 8"
19. EXISTING HOT-MIX ASPHALT SHOULDER, 6"
20. EXISTING AGGREGATE SHOULDERS, TYPE B
21. EXISTING CONCRETE COMBINATION CURB & GUTTER, TYPE B
22. EXISTING CONCRETE GUTTER, TYPE B
23. EXISTING PARTIAL REMAINING CONCRETE CURB & GUTTER
24. PROPOSED HOT-MIX ASPHALT SURFACE REMOVAL, 3 3/4"
25. PROPOSED PAVED SHOULDER REMOVAL
26. PROPOSED PAVEMENT REMOVAL
27. PROPOSED EXCAVATING AND GRADING EXISTING SHOULDER
28. PROPOSED COMBINATION CURB AND GUTTER REMOVAL
29. PROPOSED GUTTER REMOVAL
30. PROPOSED HOT-MIX ASPHALT SURFACE COURSE, 1 1/2"
31. PROPOSED HOT-MIX ASPHALT SURFACE COURSE, 1 1/4"
32. PROPOSED HOT-MIX ASPHALT BINDER COURSE, 2 1/4"
33. PROPOSED GRANULAR MATERIAL, TYPE C
34. PROPOSED HOT-MIX ASPHALT SHOULDER, 8"
35. PROPOSED HOT-MIX ASPHALT SHOULDER, 3 3/4"
36. PROPOSED AGGREGATE WEDGE SHOULDER, TYPE B
37. PROPOSED CONCRETE GUTTER, TYPE B
38. PROPOSED TACK COAT
39. PROPOSED LONGITUDINAL JOINT SEALANT
40. PROPOSED WATERPROOFING MEMBRANE SYSTEM

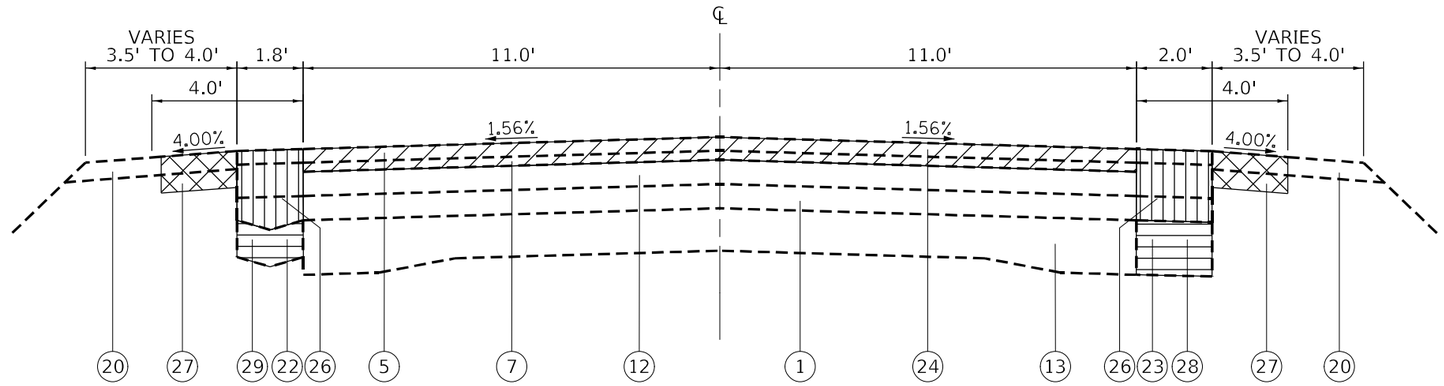


## EXISTING TYPICAL SECTION
## FAS 1751 (US 40)

STA 2106+58 TO STA 2107+16

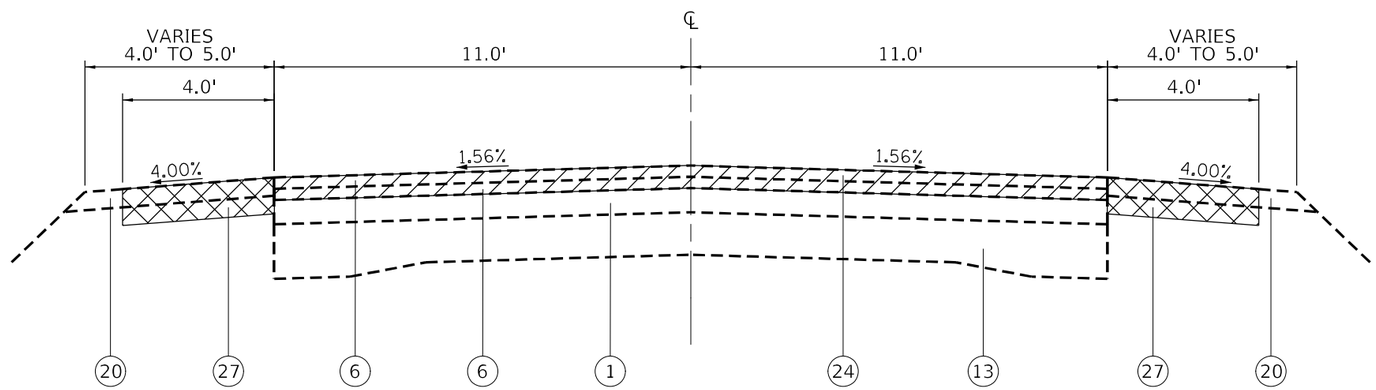


## EXISTING TYPICAL SECTION
## FAS 1751 (US 40)

STA 2109+86 TO STA 2115+76

HMA SURFACE COURSE REMOVAL

PAVEMENT REMOVAL

EXCAVATING AND GRADING EXISTING SHOULDER

PAVED SHOULDER REMOVAL

CURB & GUTTER/ GUTTER REMOVAL

## LEGEND

1. EXISTING BITUMINOUS SURFACE COURSE, 4"
2. EXISTING BITUMINOUS SURFACE COURSE, 3 3/4"
3. EXISTING BITUMINOUS SURFACE COURSE, 3"
4. EXISTING BITUMINOUS SURFACE COURSE, 2 1/2"
5. EXISTING BITUMINOUS SURFACE COURSE, 2 1/4"
6. EXISTING BITUMINOUS SURFACE COURSE, 2"
7. EXISTING BITUMINOUS SURFACE COURSE, 1 1/2"
8. EXISTING BITUMINOUS SURFACE COURSE, 1 1/4"
9. EXISTING BITUMINOUS MICROSURFACING, 1/2"
10. EXISTING BITUMINOUS BINDER COURSE, 12 1/4"
11. EXISTING BITUMINOUS BINDER COURSE, 11 1/4"
12. EXISTING BITUMINOUS LEVELING BINDER, VARIES 2" TO 10"
13. EXISTING P.C.C. PAVEMENT, 9"-7"-9"
14. EXISTING CONCRETE DECK SLAB, 7 1/2"
15. EXISTING SUBBASE GRANULAR MATERIAL, TY C, 4"
16. EXISTING LIME MODIFIED SOIL, 11 3/4"
17. EXISTING LIME MODIFIED SOIL, 10"
18. EXISTING HOT-MIX ASPHALT SHOULDER, 8"
19. EXISTING HOT-MIX ASPHALT SHOULDER, 6"
20. EXISTING AGGREGATE SHOULDERS, TYPE B
21. EXISTING CONCRETE COMBINATION CURB & GUTTER, TYPE B
22. EXISTING CONCRETE GUTTER, TYPE B
23. EXISTING PARTIAL REMAINING CONCRETE CURB & GUTTER
24. PROPOSED HOT-MIX ASPHALT SURFACE REMOVAL, 3 3/4"
25. PROPOSED PAVED SHOULDER REMOVAL
26. PROPOSED PAVEMENT REMOVAL
27. PROPOSED EXCAVATING AND GRADING EXISTING SHOULDER
28. PROPOSED COMBINATION CURB AND GUTTER REMOVAL
29. PROPOSED GUTTER REMOVAL
30. PROPOSED HOT-MIX ASPHALT SURFACE COURSE, 1 1/2"
31. PROPOSED HOT-MIX ASPHALT SURFACE COURSE, 1 1/4"
32. PROPOSED HOT-MIX ASPHALT BINDER COURSE, 2 1/4"
33. PROPOSED GRANULAR MATERIAL, TYPE C
34. PROPOSED HOT-MIX ASPHALT SHOULDER, 8"
35. PROPOSED HOT-MIX ASPHALT SHOULDER, 3 3/4"
36. PROPOSED AGGREGATE WEDGE SHOULDER, TYPE B
37. PROPOSED CONCRETE GUTTER, TYPE B
38. PROPOSED TACK COAT
39. PROPOSED LONGITUDINAL JOINT SEALANT
40. PROPOSED WATERPROOFING MEMBRANE SYSTEM

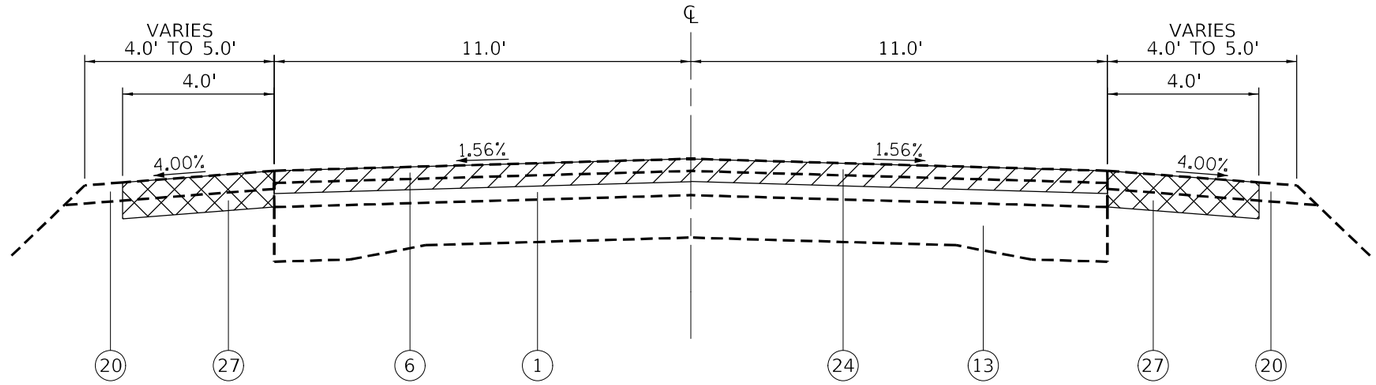


## EXISTING TYPICAL SECTION
## FAS 1751 (US 40)

STA 2115+76 TO STA 2178+05

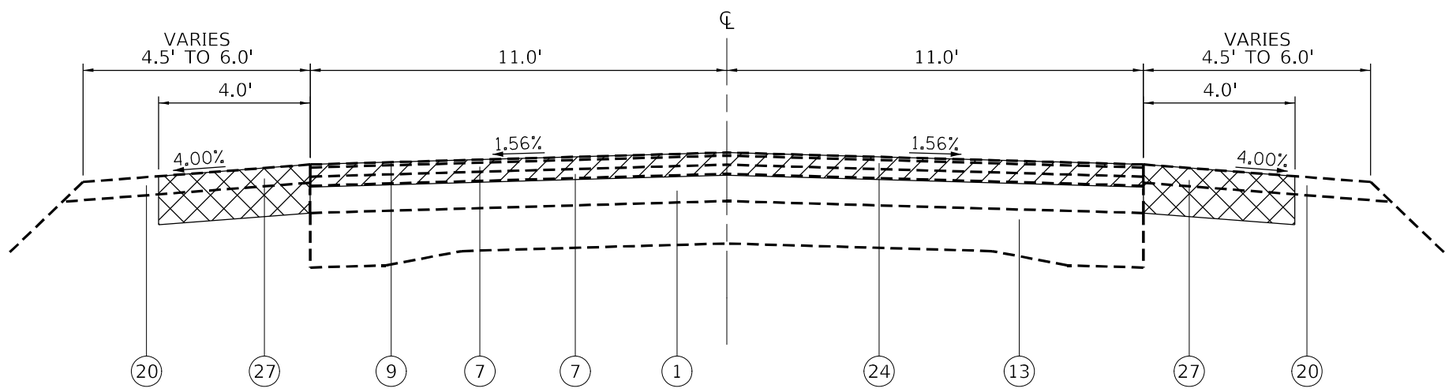


## EXISTING TYPICAL SECTION
## FAS 1751 (US 40)

STA 2178+05 TO STA 2268+00
STA 2296+31 TO STA 2326+27

HMA SURFACE COURSE REMOVAL

PAVEMENT REMOVAL

EXCAVATING AND GRADING EXISTING SHOULDER

PAVED SHOULDER REMOVAL

CURB & GUTTER/ GUTTER REMOVAL

## LEGEND

1. EXISTING BITUMINOUS SURFACE COURSE, 4"
2. EXISTING BITUMINOUS SURFACE COURSE, 3 3/4"
3. EXISTING BITUMINOUS SURFACE COURSE, 3"
4. EXISTING BITUMINOUS SURFACE COURSE, 2 1/2"
5. EXISTING BITUMINOUS SURFACE COURSE, 2 1/4"
6. EXISTING BITUMINOUS SURFACE COURSE, 2"
7. EXISTING BITUMINOUS SURFACE COURSE, 1 1/2"
8. EXISTING BITUMINOUS SURFACE COURSE, 1 1/4"
9. EXISTING BITUMINOUS MICROSURFACING, 1/2"
10. EXISTING BITUMINOUS BINDER COURSE, 12 1/4"
11. EXISTING BITUMINOUS BINDER COURSE, 11 1/4"
12. EXISTING BITUMINOUS LEVELING BINDER, VARIES 2" TO 10"
13. EXISTING P.C.C. PAVEMENT, 9"-7"-9"
14. EXISTING CONCRETE DECK SLAB, 7 1/2"
15. EXISTING SUBBASE GRANULAR MATERIAL, TY C, 4"
16. EXISTING LIME MODIFIED SOIL, 11 3/4"
17. EXISTING LIME MODIFIED SOIL, 10"
18. EXISTING HOT-MIX ASPHALT SHOULDER, 8"
19. EXISTING HOT-MIX ASPHALT SHOULDER, 6"
20. EXISTING AGGREGATE SHOULDERS, TYPE B
21. EXISTING CONCRETE COMBINATION CURB & GUTTER, TYPE B
22. EXISTING CONCRETE GUTTER, TYPE B
23. EXISTING PARTIAL REMAINING CONCRETE CURB & GUTTER
24. PROPOSED HOT-MIX ASPHALT SURFACE REMOVAL, 3 3/4"
25. PROPOSED PAVED SHOULDER REMOVAL
26. PROPOSED PAVEMENT REMOVAL
27. PROPOSED EXCAVATING AND GRADING EXISTING SHOULDER
28. PROPOSED COMBINATION CURB AND GUTTER REMOVAL
29. PROPOSED GUTTER REMOVAL
30. PROPOSED HOT-MIX ASPHALT SURFACE COURSE, 1 1/2"
31. PROPOSED HOT-MIX ASPHALT SURFACE COURSE, 1 1/4"
32. PROPOSED HOT-MIX ASPHALT BINDER COURSE, 2 1/4"
33. PROPOSED GRANULAR MATERIAL, TYPE C
34. PROPOSED HOT-MIX ASPHALT SHOULDER, 8"
35. PROPOSED HOT-MIX ASPHALT SHOULDER, 3 3/4"
36. PROPOSED AGGREGATE WEDGE SHOULDER, TYPE B
37. PROPOSED CONCRETE GUTTER, TYPE B
38. PROPOSED TACK COAT
39. PROPOSED LONGITUDINAL JOINT SEALANT
40. PROPOSED WATERPROOFING MEMBRANE SYSTEM

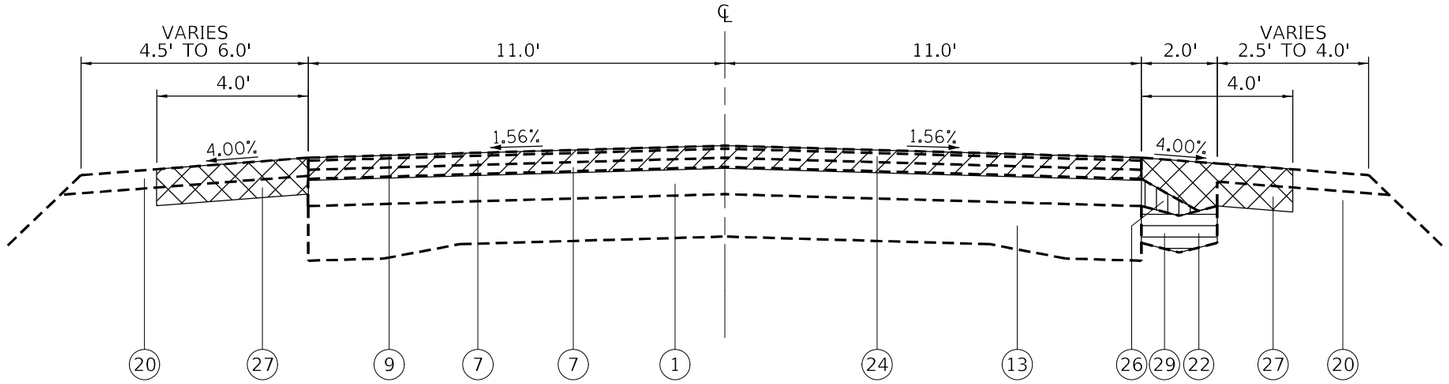


## EXISTING TYPICAL SECTION
## FAS 1751 (US 40)

STA 2268+00 TO STA 2296+31

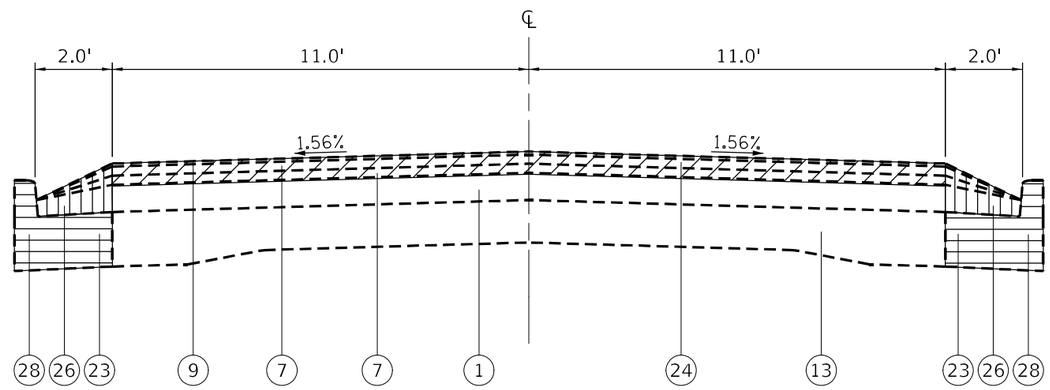


## ✳ EXISTING TYPICAL SECTION
## FAS 1751 (US 40)

STA 2326+27 TO STA 2328+52

NOTES

✳ SEE SHEET #46 FOR ADDITIONAL TYPICAL SECTION DETAILS FOR US 40 & MAPLE STREET INTERSECTION

HMA SURFACE COURSE REMOVAL

PAVEMENT REMOVAL

PAVED SHOULDER REMOVAL

CURB & GUTTER/ GUTTER REMOVAL

EXCAVATING AND GRADING EXISTING SHOULDER

## LEGEND

1. EXISTING BITUMINOUS SURFACE COURSE, 4"
2. EXISTING BITUMINOUS SURFACE COURSE, 3 3/4"
3. EXISTING BITUMINOUS SURFACE COURSE, 3"
4. EXISTING BITUMINOUS SURFACE COURSE, 2 1/2"
5. EXISTING BITUMINOUS SURFACE COURSE, 2 1/4"
6. EXISTING BITUMINOUS SURFACE COURSE, 2"
7. EXISTING BITUMINOUS SURFACE COURSE, 1 1/2"
8. EXISTING BITUMINOUS SURFACE COURSE, 1 1/4"
9. EXISTING BITUMINOUS MICROSURFACING, 1/2"
10. EXISTING BITUMINOUS BINDER COURSE, 12 1/4"
11. EXISTING BITUMINOUS BINDER COURSE, 11 1/4"
12. EXISTING BITUMINOUS LEVELING BINDER, VARIES 2" TO 10"
13. EXISTING P.C.C. PAVEMENT, 9"-7"-9"
14. EXISTING CONCRETE DECK SLAB, 7 1/2"
15. EXISTING SUBBASE GRANULAR MATERIAL, TY C, 4"
16. EXISTING LIME MODIFIED SOIL, 11 3/4"
17. EXISTING LIME MODIFIED SOIL, 10"
18. EXISTING HOT-MIX ASPHALT SHOULDER, 8"
19. EXISTING HOT-MIX ASPHALT SHOULDER, 6"
20. EXISTING AGGREGATE SHOULDERS, TYPE B
21. EXISTING CONCRETE COMBINATION CURB & GUTTER, TYPE B
22. EXISTING CONCRETE GUTTER, TYPE B
23. EXISTING PARTIAL REMAINING CONCRETE CURB & GUTTER
24. PROPOSED HOT-MIX ASPHALT SURFACE REMOVAL, 3 3/4"
25. PROPOSED PAVED SHOULDER REMOVAL
26. PROPOSED PAVEMENT REMOVAL
27. PROPOSED EXCAVATING AND GRADING EXISTING SHOULDER
28. PROPOSED COMBINATION CURB AND GUTTER REMOVAL
29. PROPOSED GUTTER REMOVAL
30. PROPOSED HOT-MIX ASPHALT SURFACE COURSE, 1 1/2"
31. PROPOSED HOT-MIX ASPHALT SURFACE COURSE, 1 1/4"
32. PROPOSED HOT-MIX ASPHALT BINDER COURSE, 2 1/4"
33. PROPOSED GRANULAR MATERIAL, TYPE C
34. PROPOSED HOT-MIX ASPHALT SHOULDER, 8"
35. PROPOSED HOT-MIX ASPHALT SHOULDER, 3 3/4"
36. PROPOSED AGGREGATE WEDGE SHOULDER, TYPE B
37. PROPOSED CONCRETE GUTTER, TYPE B
38. PROPOSED TACK COAT
39. PROPOSED LONGITUDINAL JOINT SEALANT
40. PROPOSED WATERPROOFING MEMBRANE SYSTEM

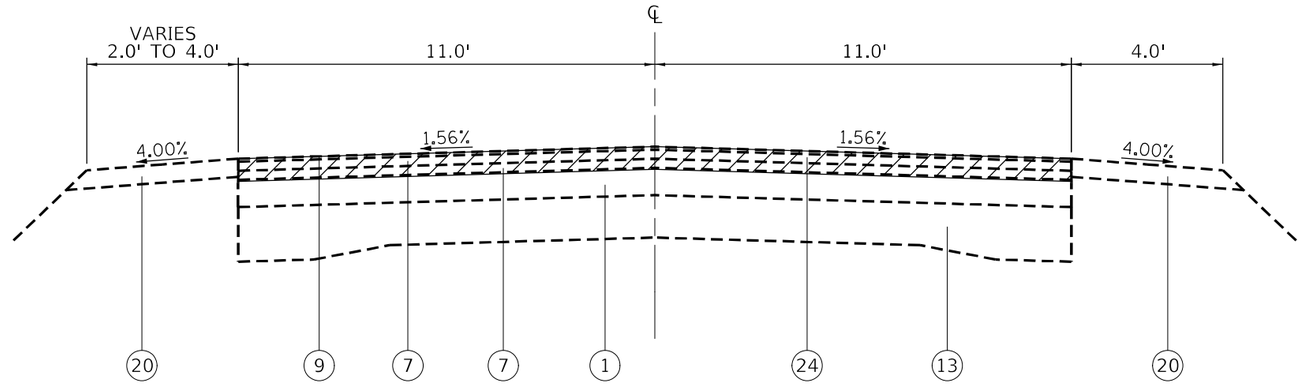


## EXISTING TYPICAL SECTION
## FAS 1751 (US 40)

STA 2328+52 TO STA 2331+60

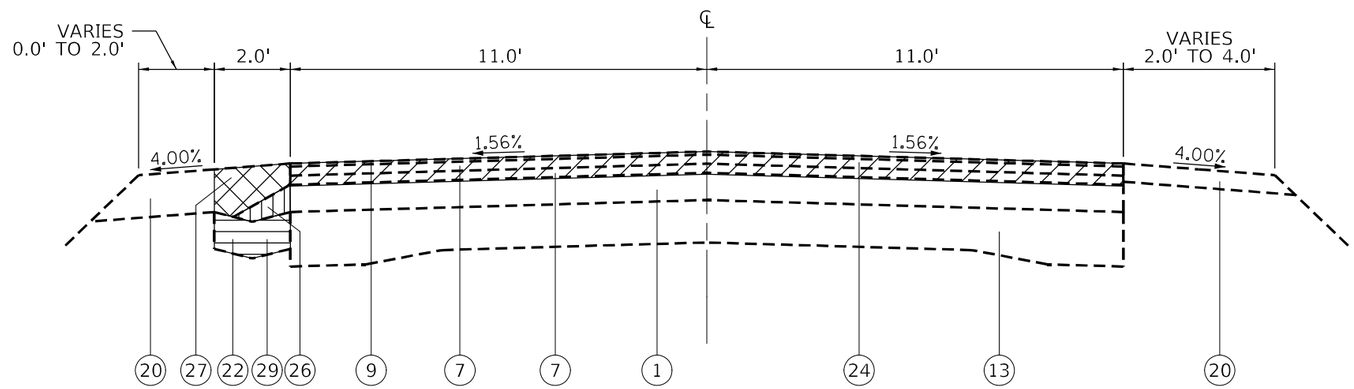


## EXISTING TYPICAL SECTION
## FAS 1751 (US 40)

STA 2331+60 TO STA 2363+43

HMA SURFACE COURSE REMOVAL

PAVEMENT REMOVAL

EXCAVATING AND GRADING EXISTING SHOULDER

PAVED SHOULDER REMOVAL

CURB & GUTTER/ GUTTER REMOVAL

## LEGEND

1. EXISTING BITUMINOUS SURFACE COURSE, 4"
2. EXISTING BITUMINOUS SURFACE COURSE, 3 3/4"
3. EXISTING BITUMINOUS SURFACE COURSE, 3"
4. EXISTING BITUMINOUS SURFACE COURSE, 2 1/2"
5. EXISTING BITUMINOUS SURFACE COURSE, 2 1/4"
6. EXISTING BITUMINOUS SURFACE COURSE, 2"
7. EXISTING BITUMINOUS SURFACE COURSE, 1 1/2"
8. EXISTING BITUMINOUS SURFACE COURSE, 1 1/4"
9. EXISTING BITUMINOUS MICROSURFACING, 1/2"
10. EXISTING BITUMINOUS BINDER COURSE, 12 1/4"
11. EXISTING BITUMINOUS BINDER COURSE, 11 1/4"
12. EXISTING BITUMINOUS LEVELING BINDER, VARIES 2" TO 10"
13. EXISTING P.C.C. PAVEMENT, 9"-7"-9"
14. EXISTING CONCRETE DECK SLAB, 7 1/2"
15. EXISTING SUBBASE GRANULAR MATERIAL, TY C, 4"
16. EXISTING LIME MODIFIED SOIL, 11 3/4"
17. EXISTING LIME MODIFIED SOIL, 10"
18. EXISTING HOT-MIX ASPHALT SHOULDER, 8"
19. EXISTING HOT-MIX ASPHALT SHOULDER, 6"
20. EXISTING AGGREGATE SHOULDERS, TYPE B
21. EXISTING CONCRETE COMBINATION CURB & GUTTER, TYPE B
22. EXISTING CONCRETE GUTTER, TYPE B
23. EXISTING PARTIAL REMAINING CONCRETE CURB & GUTTER
24. PROPOSED HOT-MIX ASPHALT SURFACE REMOVAL, 3 3/4"
25. PROPOSED PAVED SHOULDER REMOVAL
26. PROPOSED PAVEMENT REMOVAL
27. PROPOSED EXCAVATING AND GRADING EXISTING SHOULDER
28. PROPOSED COMBINATION CURB AND GUTTER REMOVAL
29. PROPOSED GUTTER REMOVAL
30. PROPOSED HOT-MIX ASPHALT SURFACE COURSE, 1 1/2"
31. PROPOSED HOT-MIX ASPHALT SURFACE COURSE, 1 1/4"
32. PROPOSED HOT-MIX ASPHALT BINDER COURSE, 2 1/4"
33. PROPOSED GRANULAR MATERIAL, TYPE C
34. PROPOSED HOT-MIX ASPHALT SHOULDER, 8"
35. PROPOSED HOT-MIX ASPHALT SHOULDER, 3 3/4"
36. PROPOSED AGGREGATE WEDGE SHOULDER, TYPE B
37. PROPOSED CONCRETE GUTTER, TYPE B
38. PROPOSED TACK COAT
39. PROPOSED LONGITUDINAL JOINT SEALANT
40. PROPOSED WATERPROOFING MEMBRANE SYSTEM

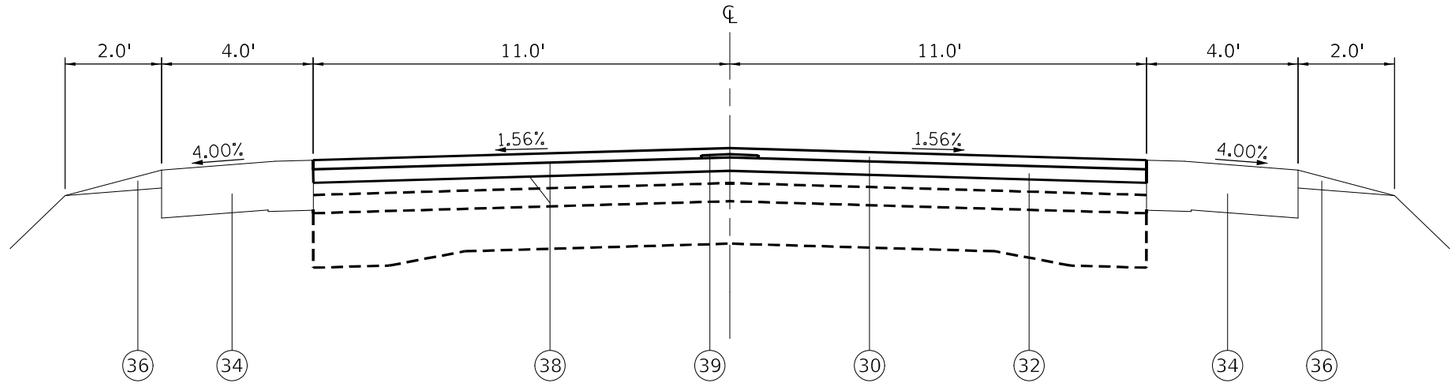


## PROPOSED TYPICAL SECTION
## FAU 9832 (US 40)

STA 1933+62 TO STA 1934+03

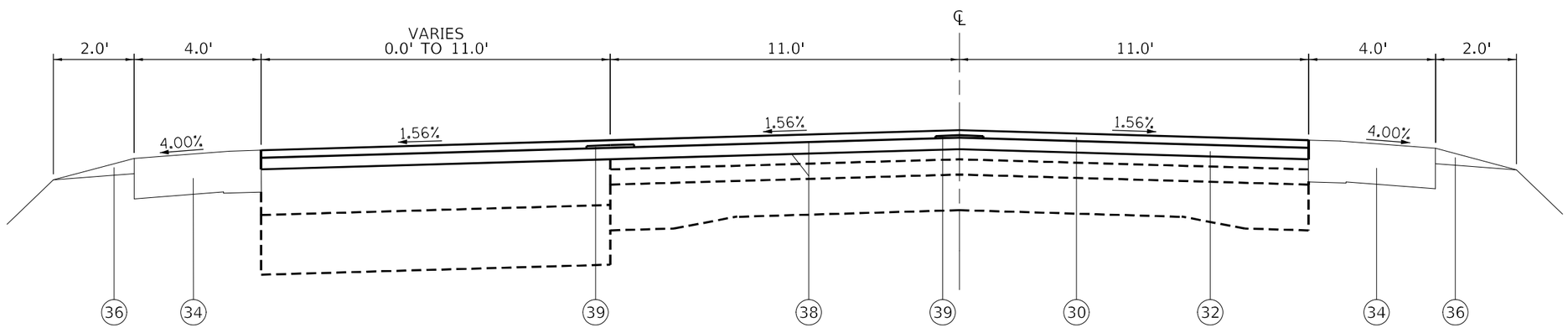


## PROPOSED TYPICAL SECTION
## FAU 9832 (US 40)

STA 1934+03 TO STA 1937+02

## LEGEND

1. EXISTING BITUMINOUS SURFACE COURSE, 4"
2. EXISTING BITUMINOUS SURFACE COURSE, 3 3/4"
3. EXISTING BITUMINOUS SURFACE COURSE, 3"
4. EXISTING BITUMINOUS SURFACE COURSE, 2 1/2"
5. EXISTING BITUMINOUS SURFACE COURSE, 2 1/4"
6. EXISTING BITUMINOUS SURFACE COURSE, 2"
7. EXISTING BITUMINOUS SURFACE COURSE, 1 1/2"
8. EXISTING BITUMINOUS SURFACE COURSE, 1 1/4"
9. EXISTING BITUMINOUS MICROSURFACING, 1/2"
10. EXISTING BITUMINOUS BINDER COURSE, 12 1/4"
11. EXISTING BITUMINOUS BINDER COURSE, 11 1/4"
12. EXISTING BITUMINOUS LEVELING BINDER, VARIES 2" TO 10"
13. EXISTING P.C.C. PAVEMENT, 9"-7"-9"
14. EXISTING CONCRETE DECK SLAB, 7 1/2"
15. EXISTING SUBBASE GRANULAR MATERIAL, TY C, 4"
16. EXISTING LIME MODIFIED SOIL, 11 3/4"
17. EXISTING LIME MODIFIED SOIL, 10"
18. EXISTING HOT-MIX ASPHALT SHOULDER, 8"
19. EXISTING HOT-MIX ASPHALT SHOULDER, 6"
20. EXISTING AGGREGATE SHOULDERS, TYPE B
21. EXISTING CONCRETE COMBINATION CURB & GUTTER, TYPE B
22. EXISTING CONCRETE GUTTER, TYPE B
23. EXISTING PARTIAL REMAINING CONCRETE CURB & GUTTER
24. PROPOSED HOT-MIX ASPHALT SURFACE REMOVAL, 3 3/4"
25. PROPOSED PAVED SHOULDER REMOVAL
26. PROPOSED PAVEMENT REMOVAL
27. PROPOSED EXCAVATING AND GRADING EXISTING SHOULDER
28. PROPOSED COMBINATION CURB AND GUTTER REMOVAL
29. PROPOSED GUTTER REMOVAL
30. PROPOSED HOT-MIX ASPHALT SURFACE COURSE, 1 1/2"
31. PROPOSED HOT-MIX ASPHALT SURFACE COURSE, 1 1/4"
32. PROPOSED HOT-MIX ASPHALT BINDER COURSE, 2 1/4"
33. PROPOSED GRANULAR MATERIAL, TYPE C
34. PROPOSED HOT-MIX ASPHALT SHOULDER, 8"
35. PROPOSED HOT-MIX ASPHALT SHOULDER, 3 3/4"
36. PROPOSED AGGREGATE WEDGE SHOULDER, TYPE B
37. PROPOSED CONCRETE GUTTER, TYPE B
38. PROPOSED TACK COAT
39. PROPOSED LONGITUDINAL JOINT SEALANT
40. PROPOSED WATERPROOFING MEMBRANE SYSTEM

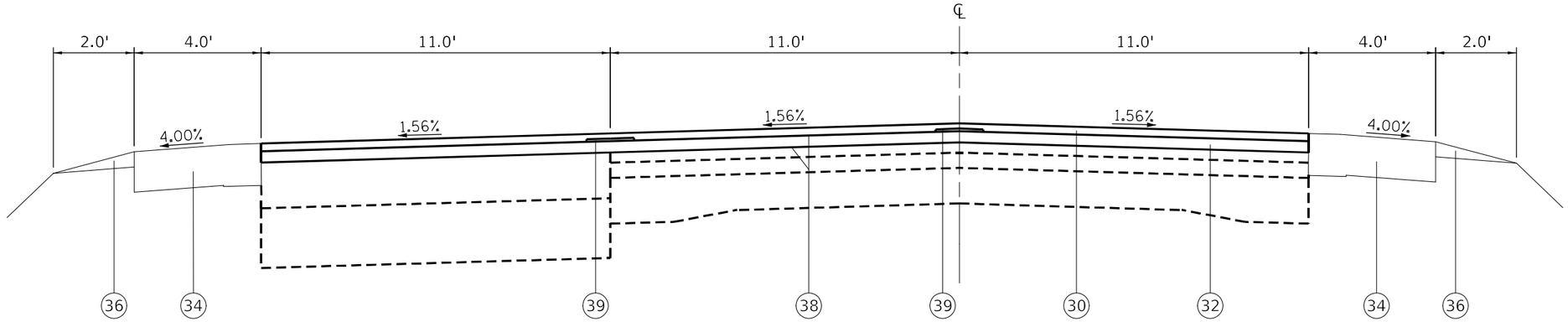


## PROPOSED TYPICAL SECTION
## FAU 9832 (US 40)

STA 1937+02 TO STA 1941+02

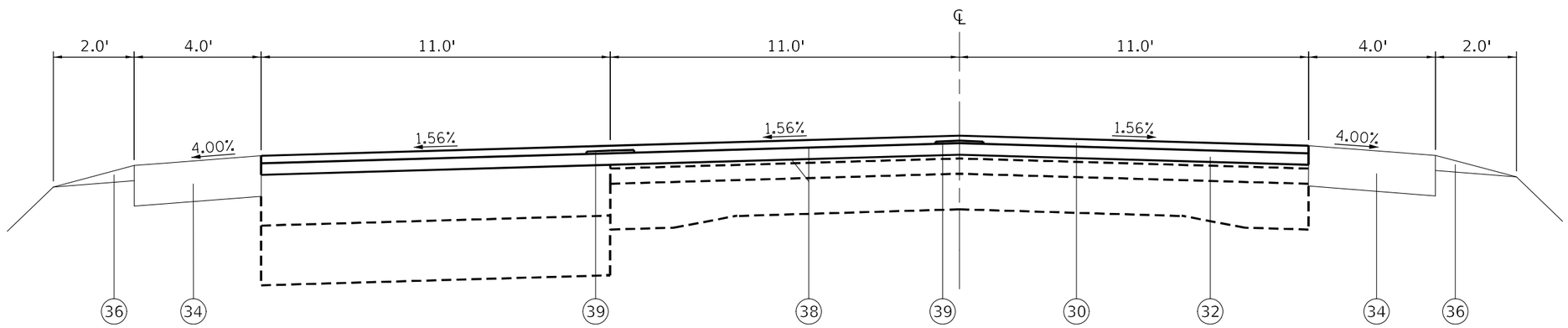


## PROPOSED TYPICAL SECTION
## FAU 9832 (US 40)

STA 1941+02 TO STA 1943+35

## LEGEND

1. EXISTING BITUMINOUS SURFACE COURSE, 4"
2. EXISTING BITUMINOUS SURFACE COURSE, 3 3/4"
3. EXISTING BITUMINOUS SURFACE COURSE, 3"
4. EXISTING BITUMINOUS SURFACE COURSE, 2 1/2"
5. EXISTING BITUMINOUS SURFACE COURSE, 2 1/4"
6. EXISTING BITUMINOUS SURFACE COURSE, 2"
7. EXISTING BITUMINOUS SURFACE COURSE, 1 1/2"
8. EXISTING BITUMINOUS SURFACE COURSE, 1 1/4"
9. EXISTING BITUMINOUS MICROSURFACING, 1/2"
10. EXISTING BITUMINOUS BINDER COURSE, 12 1/4"
11. EXISTING BITUMINOUS BINDER COURSE, 11 1/4"
12. EXISTING BITUMINOUS LEVELING BINDER, VARIES 2" TO 10"
13. EXISTING P.C.C. PAVEMENT, 9"-7"-9"
14. EXISTING CONCRETE DECK SLAB, 7 1/2"
15. EXISTING SUBBASE GRANULAR MATERIAL, TY C, 4"
16. EXISTING LIME MODIFIED SOIL, 11 3/4"
17. EXISTING LIME MODIFIED SOIL, 10"
18. EXISTING HOT-MIX ASPHALT SHOULDER, 8"
19. EXISTING HOT-MIX ASPHALT SHOULDER, 6"
20. EXISTING AGGREGATE SHOULDERS, TYPE B
21. EXISTING CONCRETE COMBINATION CURB & GUTTER, TYPE B
22. EXISTING CONCRETE GUTTER, TYPE B
23. EXISTING PARTIAL REMAINING CONCRETE CURB & GUTTER
24. PROPOSED HOT-MIX ASPHALT SURFACE REMOVAL, 3 3/4"
25. PROPOSED PAVED SHOULDER REMOVAL
26. PROPOSED PAVEMENT REMOVAL
27. PROPOSED EXCAVATING AND GRADING EXISTING SHOULDER
28. PROPOSED COMBINATION CURB AND GUTTER REMOVAL
29. PROPOSED GUTTER REMOVAL
30. PROPOSED HOT-MIX ASPHALT SURFACE COURSE, 1 1/2"
31. PROPOSED HOT-MIX ASPHALT SURFACE COURSE, 1 1/4"
32. PROPOSED HOT-MIX ASPHALT BINDER COURSE, 2 1/4"
33. PROPOSED GRANULAR MATERIAL, TYPE C
34. PROPOSED HOT-MIX ASPHALT SHOULDER, 8"
35. PROPOSED HOT-MIX ASPHALT SHOULDER, 3 3/4"
36. PROPOSED AGGREGATE WEDGE SHOULDER, TYPE B
37. PROPOSED CONCRETE GUTTER, TYPE B
38. PROPOSED TACK COAT
39. PROPOSED LONGITUDINAL JOINT SEALANT
40. PROPOSED WATERPROOFING MEMBRANE SYSTEM

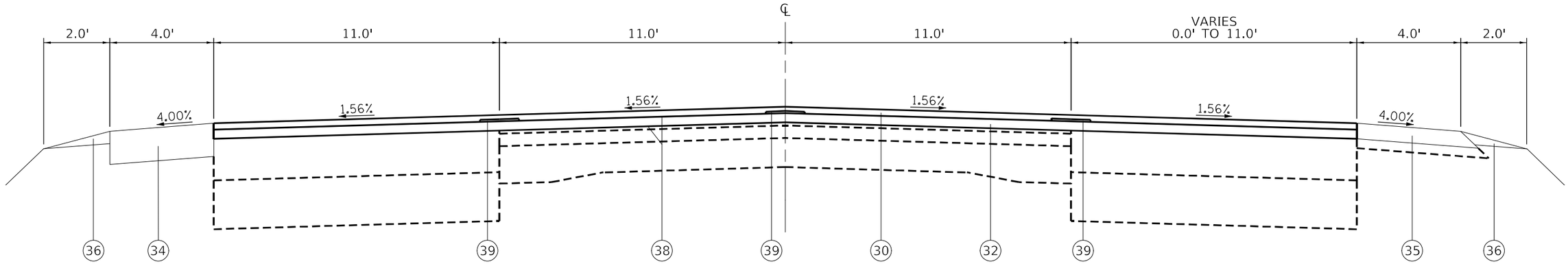


## PROPOSED TYPICAL SECTION

## FAU 9832 (US 40)

STA 1943+35 TO STA 1945+75

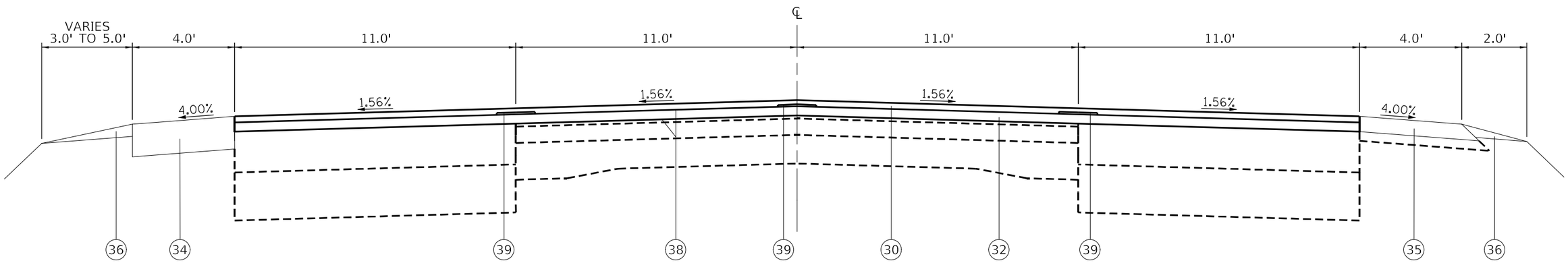


## PROPOSED TYPICAL SECTION

## FAU 9832 (US 40)

STA 1945+75 TO STA 1948+02

## LEGEND

1. EXISTING BITUMINOUS SURFACE COURSE, 4"
2. EXISTING BITUMINOUS SURFACE COURSE, 3 3/4"
3. EXISTING BITUMINOUS SURFACE COURSE, 3"
4. EXISTING BITUMINOUS SURFACE COURSE, 2 1/2"
5. EXISTING BITUMINOUS SURFACE COURSE, 2 1/4"
6. EXISTING BITUMINOUS SURFACE COURSE, 2"
7. EXISTING BITUMINOUS SURFACE COURSE, 1 1/2"
8. EXISTING BITUMINOUS SURFACE COURSE, 1 1/4"
9. EXISTING BITUMINOUS MICROSURFACING, 1/2"
10. EXISTING BITUMINOUS BINDER COURSE, 12 1/4"
11. EXISTING BITUMINOUS BINDER COURSE, 11 1/4"
12. EXISTING BITUMINOUS LEVELING BINDER, VARIES 2" TO 10"
13. EXISTING P.C.C. PAVEMENT, 9"-7"-9"
14. EXISTING CONCRETE DECK SLAB, 7 1/2"
15. EXISTING SUBBASE GRANULAR MATERIAL, TY C, 4"
16. EXISTING LIME MODIFIED SOIL, 11 3/4"
17. EXISTING LIME MODIFIED SOIL, 10"
18. EXISTING HOT-MIX ASPHALT SHOULDER, 8"
19. EXISTING HOT-MIX ASPHALT SHOULDER, 6"
20. EXISTING AGGREGATE SHOULDERS, TYPE B
21. EXISTING CONCRETE COMBINATION CURB & GUTTER, TYPE B
22. EXISTING CONCRETE GUTTER, TYPE B
23. EXISTING PARTIAL REMAINING CONCRETE CURB & GUTTER
24. PROPOSED HOT-MIX ASPHALT SURFACE REMOVAL, 3 3/4"
25. PROPOSED PAVED SHOULDER REMOVAL
26. PROPOSED PAVEMENT REMOVAL
27. PROPOSED EXCAVATING AND GRADING EXISTING SHOULDER
28. PROPOSED COMBINATION CURB AND GUTTER REMOVAL
29. PROPOSED GUTTER REMOVAL
30. PROPOSED HOT-MIX ASPHALT SURFACE COURSE, 1 1/2"
31. PROPOSED HOT-MIX ASPHALT SURFACE COURSE, 1 1/4"
32. PROPOSED HOT-MIX ASPHALT BINDER COURSE, 2 1/4"
33. PROPOSED GRANULAR MATERIAL, TYPE C
34. PROPOSED HOT-MIX ASPHALT SHOULDER, 8"
35. PROPOSED HOT-MIX ASPHALT SHOULDER, 3 3/4"
36. PROPOSED AGGREGATE WEDGE SHOULDER, TYPE B
37. PROPOSED CONCRETE GUTTER, TYPE B
38. PROPOSED TACK COAT
39. PROPOSED LONGITUDINAL JOINT SEALANT
40. PROPOSED WATERPROOFING MEMBRANE SYSTEM

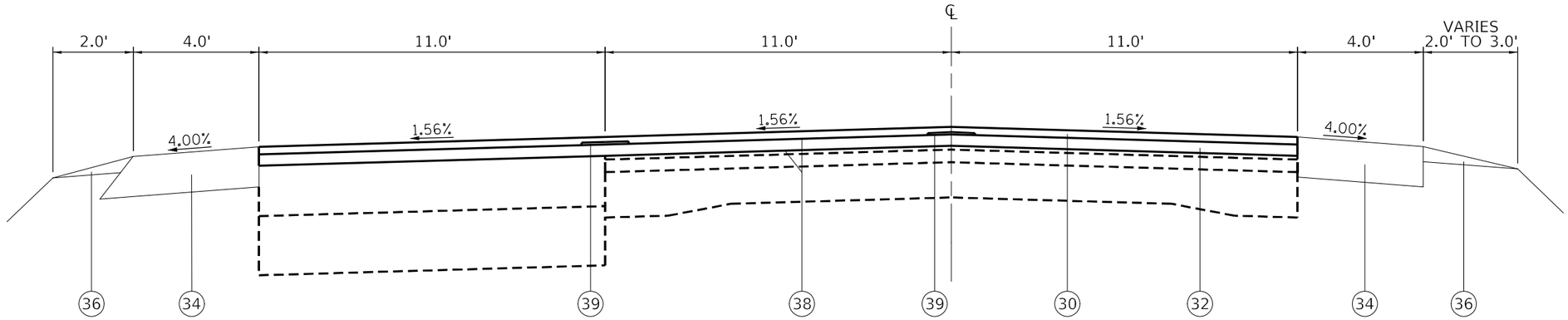


## PROPOSED TYPICAL SECTION
## FAU 9832 (US 40)

STA 1948+02 TO STA 1950+71

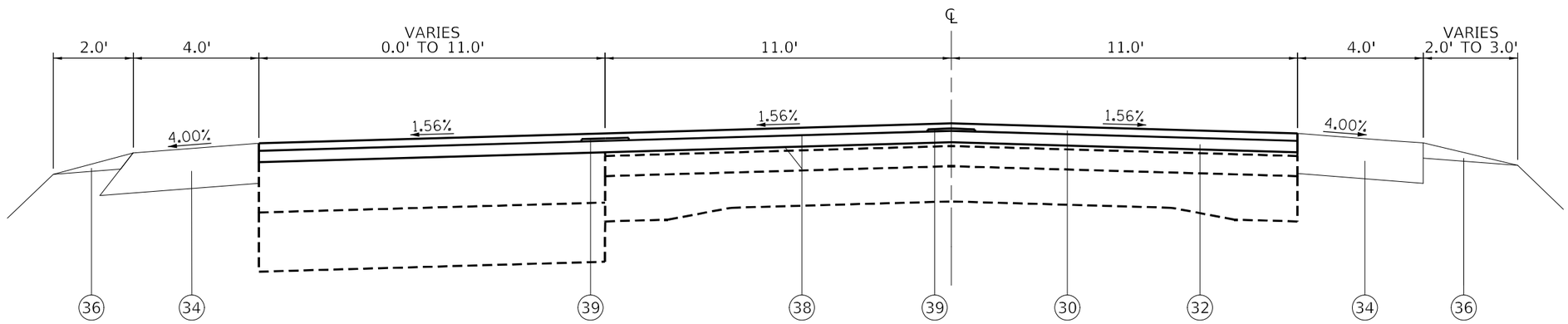


## PROPOSED TYPICAL SECTION
## FAU 9832 (US 40)

STA 1950+71 TO STA 1955+93

## LEGEND

1. EXISTING BITUMINOUS SURFACE COURSE, 4"
2. EXISTING BITUMINOUS SURFACE COURSE, 3 3/4"
3. EXISTING BITUMINOUS SURFACE COURSE, 3"
4. EXISTING BITUMINOUS SURFACE COURSE, 2 1/2"
5. EXISTING BITUMINOUS SURFACE COURSE, 2 1/4"
6. EXISTING BITUMINOUS SURFACE COURSE, 2"
7. EXISTING BITUMINOUS SURFACE COURSE, 1 1/2"
8. EXISTING BITUMINOUS SURFACE COURSE, 1 1/4"
9. EXISTING BITUMINOUS MICROSURFACING, 1/2"
10. EXISTING BITUMINOUS BINDER COURSE, 12 1/4"
11. EXISTING BITUMINOUS BINDER COURSE, 11 1/4"
12. EXISTING BITUMINOUS LEVELING BINDER, VARIES 2" TO 10"
13. EXISTING P.C.C. PAVEMENT, 9"-7"-9"
14. EXISTING CONCRETE DECK SLAB, 7 1/2"
15. EXISTING SUBBASE GRANULAR MATERIAL, TY C, 4"
16. EXISTING LIME MODIFIED SOIL, 11 3/4"
17. EXISTING LIME MODIFIED SOIL, 10"
18. EXISTING HOT-MIX ASPHALT SHOULDER, 8"
19. EXISTING HOT-MIX ASPHALT SHOULDER, 6"
20. EXISTING AGGREGATE SHOULDERS, TYPE B
21. EXISTING CONCRETE COMBINATION CURB & GUTTER, TYPE B
22. EXISTING CONCRETE GUTTER, TYPE B
23. EXISTING PARTIAL REMAINING CONCRETE CURB & GUTTER
24. PROPOSED HOT-MIX ASPHALT SURFACE REMOVAL, 3 3/4"
25. PROPOSED PAVED SHOULDER REMOVAL
26. PROPOSED PAVEMENT REMOVAL
27. PROPOSED EXCAVATING AND GRADING EXISTING SHOULDER
28. PROPOSED COMBINATION CURB AND GUTTER REMOVAL
29. PROPOSED GUTTER REMOVAL
30. PROPOSED HOT-MIX ASPHALT SURFACE COURSE, 1 1/2"
31. PROPOSED HOT-MIX ASPHALT SURFACE COURSE, 1 1/4"
32. PROPOSED HOT-MIX ASPHALT BINDER COURSE, 2 1/4"
33. PROPOSED GRANULAR MATERIAL, TYPE C
34. PROPOSED HOT-MIX ASPHALT SHOULDER, 8"
35. PROPOSED HOT-MIX ASPHALT SHOULDER, 3 3/4"
36. PROPOSED AGGREGATE WEDGE SHOULDER, TYPE B
37. PROPOSED CONCRETE GUTTER, TYPE B
38. PROPOSED TACK COAT
39. PROPOSED LONGITUDINAL JOINT SEALANT
40. PROPOSED WATERPROOFING MEMBRANE SYSTEM

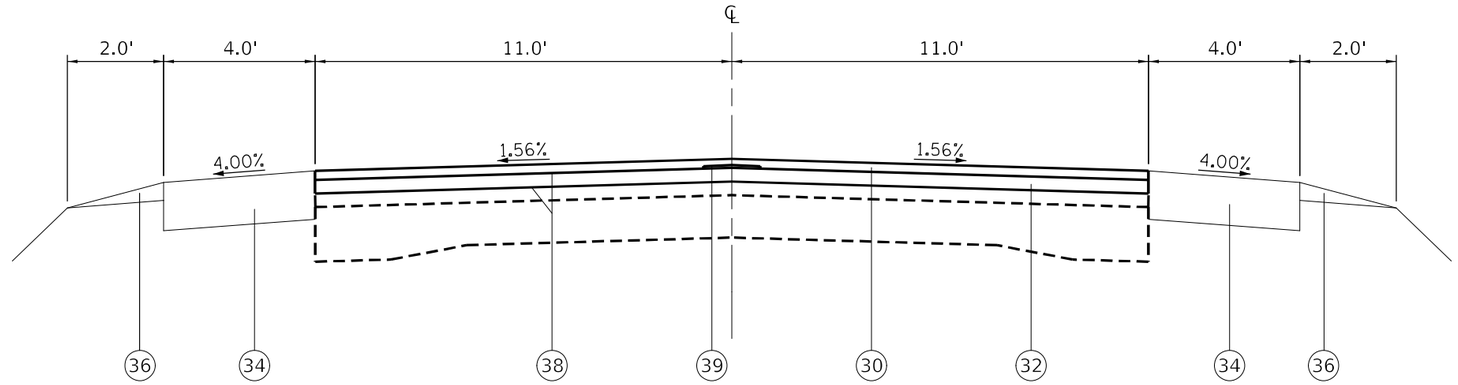


## PROPOSED TYPICAL SECTION
## FAU 9832 (US 40)

STA 1955+93 TO STA 1985+09

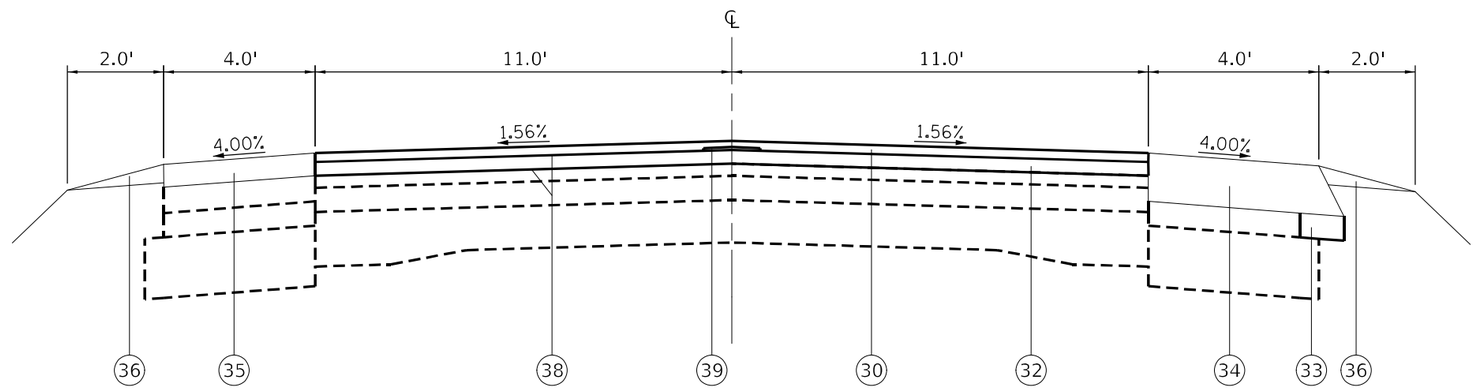


## PROPOSED TYPICAL SECTION
## FAU 9832 (US 40)

STA 1985+09 TO STA 1986+09

## LEGEND

1. EXISTING BITUMINOUS SURFACE COURSE, 4"
2. EXISTING BITUMINOUS SURFACE COURSE, 3 3/4"
3. EXISTING BITUMINOUS SURFACE COURSE, 3"
4. EXISTING BITUMINOUS SURFACE COURSE, 2 1/2"
5. EXISTING BITUMINOUS SURFACE COURSE, 2 1/4"
6. EXISTING BITUMINOUS SURFACE COURSE, 2"
7. EXISTING BITUMINOUS SURFACE COURSE, 1 1/2"
8. EXISTING BITUMINOUS SURFACE COURSE, 1 1/4"
9. EXISTING BITUMINOUS MICROSURFACING, 1/2"
10. EXISTING BITUMINOUS BINDER COURSE, 12 1/4"
11. EXISTING BITUMINOUS BINDER COURSE, 11 1/4"
12. EXISTING BITUMINOUS LEVELING BINDER, VARIES 2" TO 10"
13. EXISTING P.C.C. PAVEMENT, 9"-7"-9"
14. EXISTING CONCRETE DECK SLAB, 7 1/2"
15. EXISTING SUBBASE GRANULAR MATERIAL, TY C, 4"
16. EXISTING LIME MODIFIED SOIL, 11 3/4"
17. EXISTING LIME MODIFIED SOIL, 10"
18. EXISTING HOT-MIX ASPHALT SHOULDER, 8"
19. EXISTING HOT-MIX ASPHALT SHOULDER, 6"
20. EXISTING AGGREGATE SHOULDERS, TYPE B
21. EXISTING CONCRETE COMBINATION CURB & GUTTER, TYPE B
22. EXISTING CONCRETE GUTTER, TYPE B
23. EXISTING PARTIAL REMAINING CONCRETE CURB & GUTTER
24. PROPOSED HOT-MIX ASPHALT SURFACE REMOVAL, 3 3/4"
25. PROPOSED PAVED SHOULDER REMOVAL
26. PROPOSED PAVEMENT REMOVAL
27. PROPOSED EXCAVATING AND GRADING EXISTING SHOULDER
28. PROPOSED COMBINATION CURB AND GUTTER REMOVAL
29. PROPOSED GUTTER REMOVAL
30. PROPOSED HOT-MIX ASPHALT SURFACE COURSE, 1 1/2"
31. PROPOSED HOT-MIX ASPHALT SURFACE COURSE, 1 1/4"
32. PROPOSED HOT-MIX ASPHALT BINDER COURSE, 2 1/4"
33. PROPOSED GRANULAR MATERIAL, TYPE C
34. PROPOSED HOT-MIX ASPHALT SHOULDER, 8"
35. PROPOSED HOT-MIX ASPHALT SHOULDER, 3 3/4"
36. PROPOSED AGGREGATE WEDGE SHOULDER, TYPE B
37. PROPOSED CONCRETE GUTTER, TYPE B
38. PROPOSED TACK COAT
39. PROPOSED LONGITUDINAL JOINT SEALANT
40. PROPOSED WATERPROOFING MEMBRANE SYSTEM



| | | | |
|---|---|---|---|
| USER NAME = humphreysb | DESIGNED - | REVISED - | STATE OF ILLINOIS DEPARTMENT OF TRANSPORTATION |
| | DRAWN - | REVISED - | |
| PLOT SCALE = 40.0000 ' / in. | CHECKED - | REVISED - | |
| PLOT DATE = 5/13/2022 | DATE - | REVISED - | |

**PROPOSED TYPICAL SECTIONS**

SCALE: | SHEET 5 OF 15 SHEETS | STA. 1955+93 TO STA. 1986+09

| **F.A. RTE. | SECTION | COUNTY | TOTAL SHEETS | SHEET NO. |
|---|---|---|---|---|
| ** | (Q-1,X-1,F-1)RS-2, Q-1VBDR-1 | BOND | 113 | 30 |
| **FAU 9832, FAS 1751 | | CONTRACT NO. 76K46 | | |
| | | ILLINOIS | FED. AID PROJECT | |

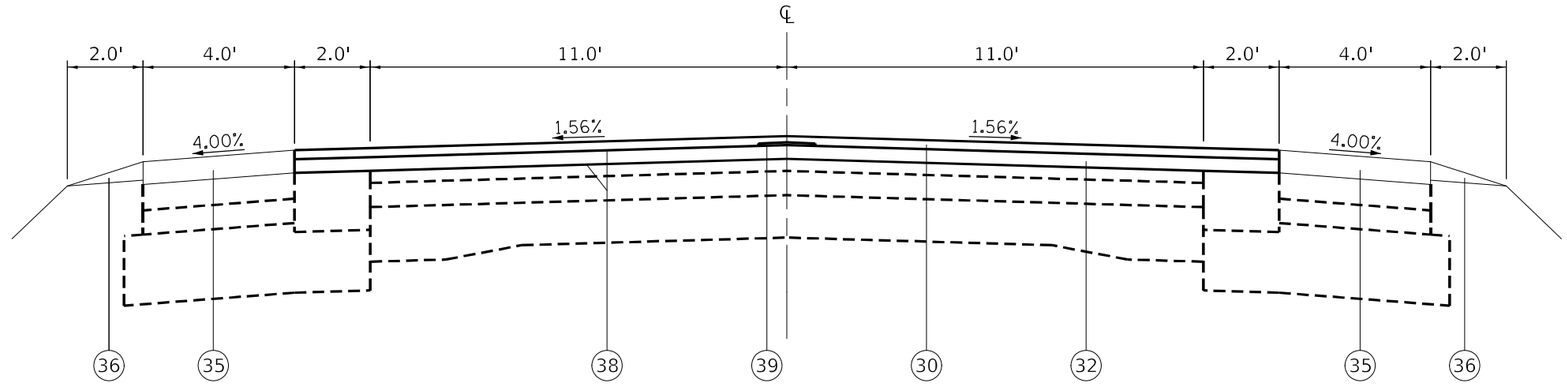


## PROPOSED TYPICAL SECTION
## FAU 9832 (US 40)

STA 1986+09 TO STA 1986+69

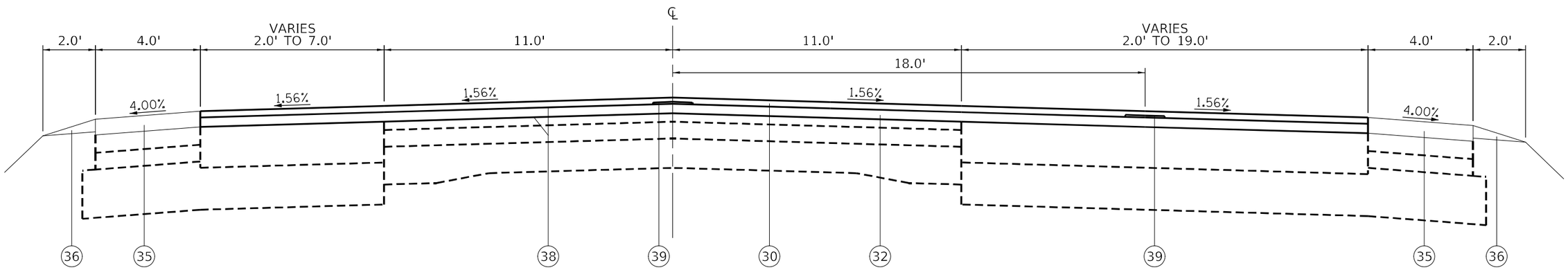


## PROPOSED TYPICAL SECTION
## FAU 9832 (US 40)

STA 1986+69 TO STA 1989+09

## LEGEND

1. EXISTING BITUMINOUS SURFACE COURSE, 4"
2. EXISTING BITUMINOUS SURFACE COURSE, 3 3/4"
3. EXISTING BITUMINOUS SURFACE COURSE, 3"
4. EXISTING BITUMINOUS SURFACE COURSE, 2 1/2"
5. EXISTING BITUMINOUS SURFACE COURSE, 2 1/4"
6. EXISTING BITUMINOUS SURFACE COURSE, 2"
7. EXISTING BITUMINOUS SURFACE COURSE, 1 1/2"
8. EXISTING BITUMINOUS SURFACE COURSE, 1 1/4"
9. EXISTING BITUMINOUS MICROSURFACING, 1/2"
10. EXISTING BITUMINOUS BINDER COURSE, 12 1/4"
11. EXISTING BITUMINOUS BINDER COURSE, 11 1/4"
12. EXISTING BITUMINOUS LEVELING BINDER, VARIES 2" TO 10"
13. EXISTING P.C.C. PAVEMENT, 9"-7"-9"
14. EXISTING CONCRETE DECK SLAB, 7 1/2"
15. EXISTING SUBBASE GRANULAR MATERIAL, TY C, 4"
16. EXISTING LIME MODIFIED SOIL, 11 3/4"
17. EXISTING LIME MODIFIED SOIL, 10"
18. EXISTING HOT-MIX ASPHALT SHOULDER, 8"
19. EXISTING HOT-MIX ASPHALT SHOULDER, 6"
20. EXISTING AGGREGATE SHOULDERS, TYPE B
21. EXISTING CONCRETE COMBINATION CURB & GUTTER, TYPE B
22. EXISTING CONCRETE GUTTER, TYPE B
23. EXISTING PARTIAL REMAINING CONCRETE CURB & GUTTER
24. PROPOSED HOT-MIX ASPHALT SURFACE REMOVAL, 3 3/4"
25. PROPOSED PAVED SHOULDER REMOVAL
26. PROPOSED PAVEMENT REMOVAL
27. PROPOSED EXCAVATING AND GRADING EXISTING SHOULDER
28. PROPOSED COMBINATION CURB AND GUTTER REMOVAL
29. PROPOSED GUTTER REMOVAL
30. PROPOSED HOT-MIX ASPHALT SURFACE COURSE, 1 1/2"
31. PROPOSED HOT-MIX ASPHALT SURFACE COURSE, 1 1/4"
32. PROPOSED HOT-MIX ASPHALT BINDER COURSE, 2 1/4"
33. PROPOSED GRANULAR MATERIAL, TYPE C
34. PROPOSED HOT-MIX ASPHALT SHOULDER, 8"
35. PROPOSED HOT-MIX ASPHALT SHOULDER, 3 3/4"
36. PROPOSED AGGREGATE WEDGE SHOULDER, TYPE B
37. PROPOSED CONCRETE GUTTER, TYPE B
38. PROPOSED TACK COAT
39. PROPOSED LONGITUDINAL JOINT SEALANT
40. PROPOSED WATERPROOFING MEMBRANE SYSTEM

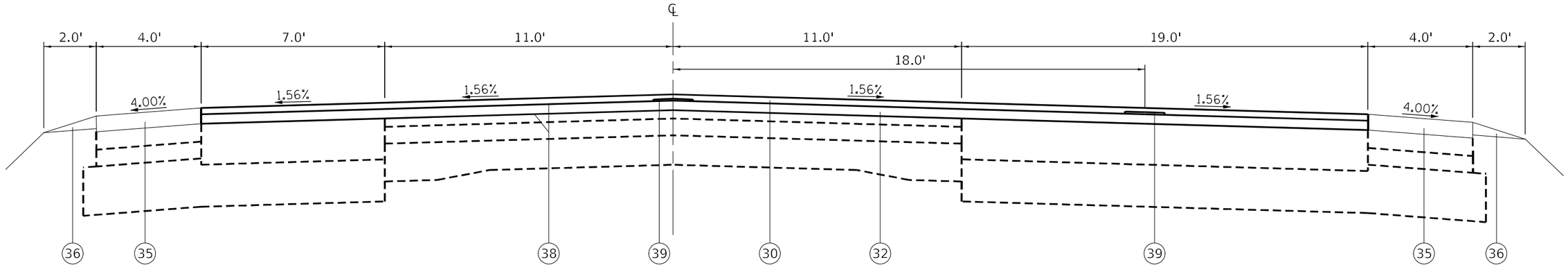


## PROPOSED TYPICAL SECTION
## FAU 9832 (US 40)

STA 1989+09 TO STA 1992+13

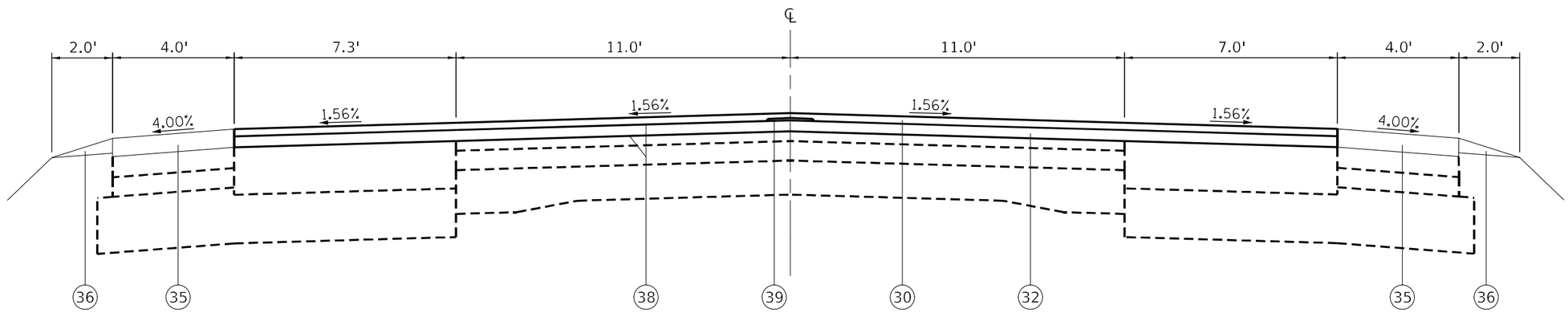


## PROPOSED TYPICAL SECTION
## FAU 9832 (US 40)

STA 1992+13 TO STA 1997+15

## LEGEND

1. EXISTING BITUMINOUS SURFACE COURSE, 4"
2. EXISTING BITUMINOUS SURFACE COURSE, 3 3/4"
3. EXISTING BITUMINOUS SURFACE COURSE, 3"
4. EXISTING BITUMINOUS SURFACE COURSE, 2 1/2"
5. EXISTING BITUMINOUS SURFACE COURSE, 2 1/4"
6. EXISTING BITUMINOUS SURFACE COURSE, 2"
7. EXISTING BITUMINOUS SURFACE COURSE, 1 1/2"
8. EXISTING BITUMINOUS SURFACE COURSE, 1 1/4"
9. EXISTING BITUMINOUS MICROSURFACING, 1/2"
10. EXISTING BITUMINOUS BINDER COURSE, 12 1/4"
11. EXISTING BITUMINOUS BINDER COURSE, 11 1/4"
12. EXISTING BITUMINOUS LEVELING BINDER, VARIES 2" TO 10"
13. EXISTING P.C.C. PAVEMENT, 9"-7"-9"
14. EXISTING CONCRETE DECK SLAB, 7 1/2"
15. EXISTING SUBBASE GRANULAR MATERIAL, TY C, 4"
16. EXISTING LIME MODIFIED SOIL, 11 3/4"
17. EXISTING LIME MODIFIED SOIL, 10"
18. EXISTING HOT-MIX ASPHALT SHOULDER, 8"
19. EXISTING HOT-MIX ASPHALT SHOULDER, 6"
20. EXISTING AGGREGATE SHOULDERS, TYPE B
21. EXISTING CONCRETE COMBINATION CURB & GUTTER, TYPE B
22. EXISTING CONCRETE GUTTER, TYPE B
23. EXISTING PARTIAL REMAINING CONCRETE CURB & GUTTER
24. PROPOSED HOT-MIX ASPHALT SURFACE REMOVAL, 3 3/4"
25. PROPOSED PAVED SHOULDER REMOVAL
26. PROPOSED PAVEMENT REMOVAL
27. PROPOSED EXCAVATING AND GRADING EXISTING SHOULDER
28. PROPOSED COMBINATION CURB AND GUTTER REMOVAL
29. PROPOSED GUTTER REMOVAL
30. PROPOSED HOT-MIX ASPHALT SURFACE COURSE, 1 1/2"
31. PROPOSED HOT-MIX ASPHALT SURFACE COURSE, 1 1/4"
32. PROPOSED HOT-MIX ASPHALT BINDER COURSE, 2 1/4"
33. PROPOSED GRANULAR MATERIAL, TYPE C
34. PROPOSED HOT-MIX ASPHALT SHOULDER, 8"
35. PROPOSED HOT-MIX ASPHALT SHOULDER, 3 3/4"
36. PROPOSED AGGREGATE WEDGE SHOULDER, TYPE B
37. PROPOSED CONCRETE GUTTER, TYPE B
38. PROPOSED TACK COAT
39. PROPOSED LONGITUDINAL JOINT SEALANT
40. PROPOSED WATERPROOFING MEMBRANE SYSTEM

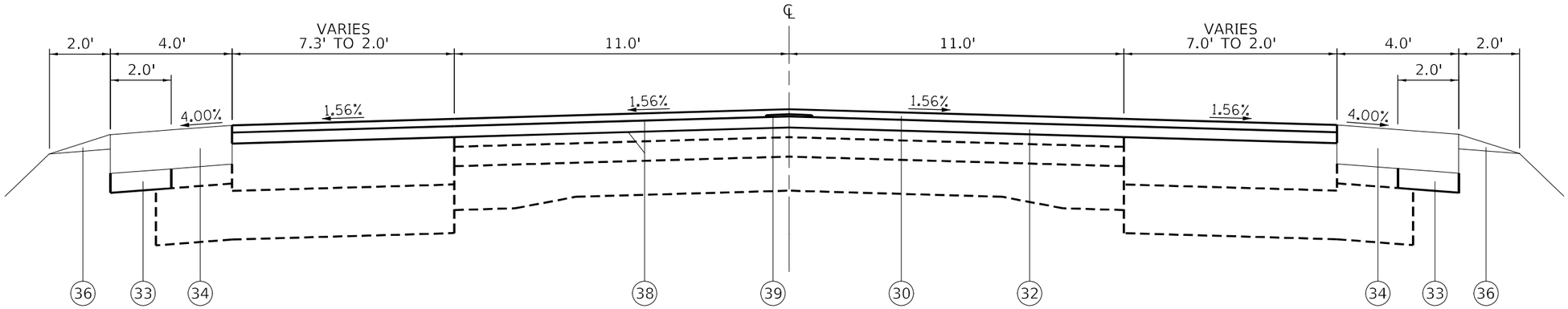


## PROPOSED TYPICAL SECTION
## FAU 9832 (US 40)

STA 1997+15 TO STA 2000+15

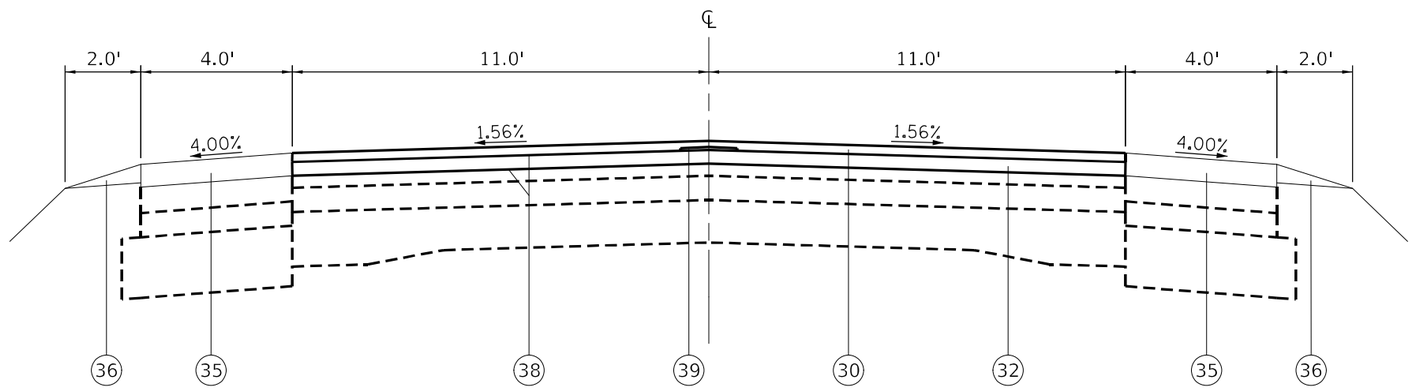


## PROPOSED TYPICAL SECTION
## FAU 9832 (US 40)

STA 2000+15 TO STA 2001+15

## LEGEND

1. EXISTING BITUMINOUS SURFACE COURSE, 4"
2. EXISTING BITUMINOUS SURFACE COURSE, 3 3/4"
3. EXISTING BITUMINOUS SURFACE COURSE, 3"
4. EXISTING BITUMINOUS SURFACE COURSE, 2 1/2"
5. EXISTING BITUMINOUS SURFACE COURSE, 2 1/4"
6. EXISTING BITUMINOUS SURFACE COURSE, 2"
7. EXISTING BITUMINOUS SURFACE COURSE, 1 1/2"
8. EXISTING BITUMINOUS SURFACE COURSE, 1 1/4"
9. EXISTING BITUMINOUS MICROSURFACING, 1/2"
10. EXISTING BITUMINOUS BINDER COURSE, 12 1/4"
11. EXISTING BITUMINOUS BINDER COURSE, 11 1/4"
12. EXISTING BITUMINOUS LEVELING BINDER, VARIES 2" TO 10"
13. EXISTING P.C.C. PAVEMENT, 9"-7"-9"
14. EXISTING CONCRETE DECK SLAB, 7 1/2"
15. EXISTING SUBBASE GRANULAR MATERIAL, TY C, 4"
16. EXISTING LIME MODIFIED SOIL, 11 3/4"
17. EXISTING LIME MODIFIED SOIL, 10"
18. EXISTING HOT-MIX ASPHALT SHOULDER, 8"
19. EXISTING HOT-MIX ASPHALT SHOULDER, 6"
20. EXISTING AGGREGATE SHOULDERS, TYPE B
21. EXISTING CONCRETE COMBINATION CURB & GUTTER, TYPE B
22. EXISTING CONCRETE GUTTER, TYPE B
23. EXISTING PARTIAL REMAINING CONCRETE CURB & GUTTER
24. PROPOSED HOT-MIX ASPHALT SURFACE REMOVAL, 3 3/4"
25. PROPOSED PAVED SHOULDER REMOVAL
26. PROPOSED PAVEMENT REMOVAL
27. PROPOSED EXCAVATING AND GRADING EXISTING SHOULDER
28. PROPOSED COMBINATION CURB AND GUTTER REMOVAL
29. PROPOSED GUTTER REMOVAL
30. PROPOSED HOT-MIX ASPHALT SURFACE COURSE, 1 1/2"
31. PROPOSED HOT-MIX ASPHALT SURFACE COURSE, 1 1/4"
32. PROPOSED HOT-MIX ASPHALT BINDER COURSE, 2 1/4"
33. PROPOSED GRANULAR MATERIAL, TYPE C
34. PROPOSED HOT-MIX ASPHALT SHOULDER, 8"
35. PROPOSED HOT-MIX ASPHALT SHOULDER, 3 3/4"
36. PROPOSED AGGREGATE WEDGE SHOULDER, TYPE B
37. PROPOSED CONCRETE GUTTER, TYPE B
38. PROPOSED TACK COAT
39. PROPOSED LONGITUDINAL JOINT SEALANT
40. PROPOSED WATERPROOFING MEMBRANE SYSTEM

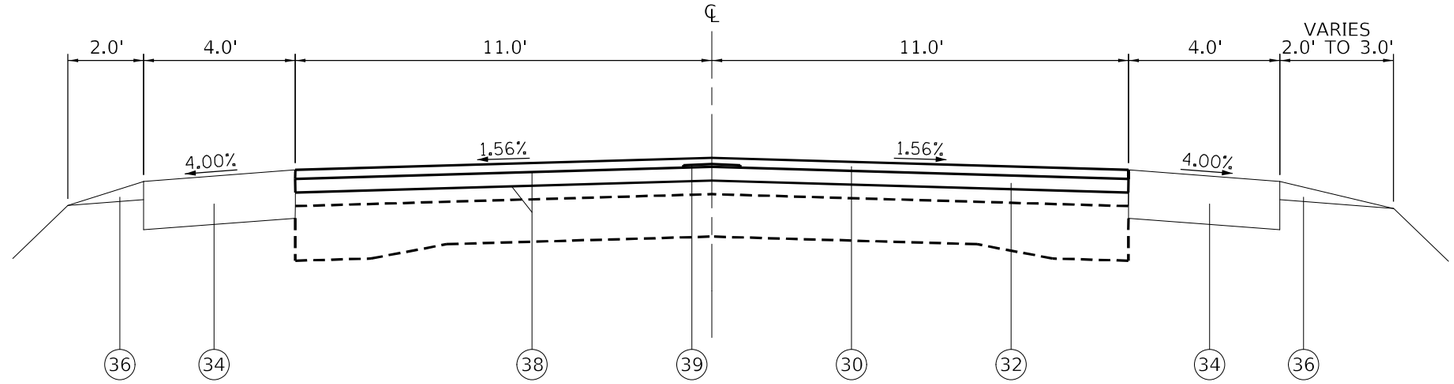


## PROPOSED TYPICAL SECTION
## FAS 1751 (US 40)

STA 2001+15 TO STA 2086+00

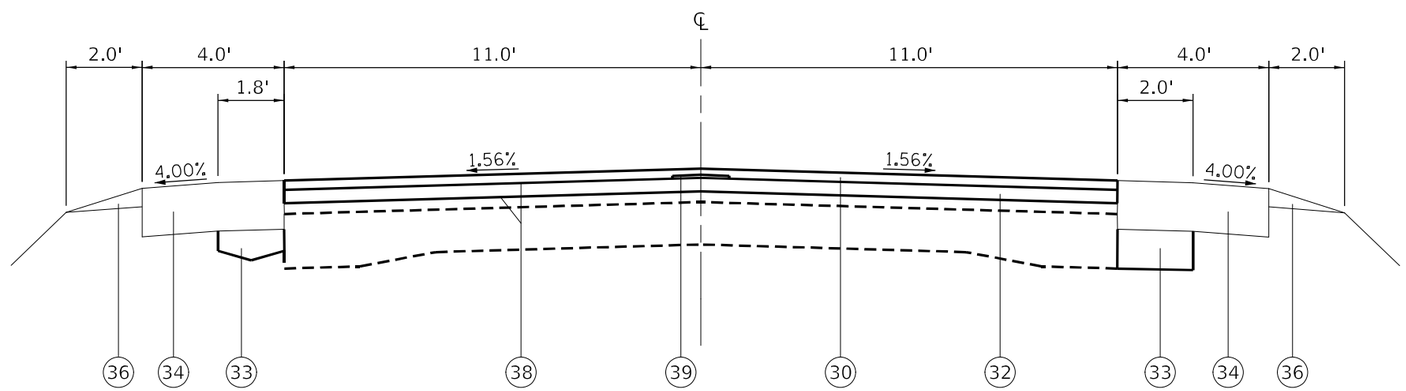


## PROPOSED TYPICAL SECTION
## FAS 1751 (US 40)

STA 2086+00 TO STA 2094+41
STA 2099+96 TO STA 2102+28

## LEGEND

1. EXISTING BITUMINOUS SURFACE COURSE, 4"
2. EXISTING BITUMINOUS SURFACE COURSE, 3 3/4"
3. EXISTING BITUMINOUS SURFACE COURSE, 3"
4. EXISTING BITUMINOUS SURFACE COURSE, 2 1/2"
5. EXISTING BITUMINOUS SURFACE COURSE, 2 1/4"
6. EXISTING BITUMINOUS SURFACE COURSE, 2"
7. EXISTING BITUMINOUS SURFACE COURSE, 1 1/2"
8. EXISTING BITUMINOUS SURFACE COURSE, 1 1/4"
9. EXISTING BITUMINOUS MICROSURFACING, 1/2"
10. EXISTING BITUMINOUS BINDER COURSE, 12 1/4"
11. EXISTING BITUMINOUS BINDER COURSE, 11 1/4"
12. EXISTING BITUMINOUS LEVELING BINDER, VARIES 2" TO 10"
13. EXISTING P.C.C. PAVEMENT, 9"-7"-9"
14. EXISTING CONCRETE DECK SLAB, 7 1/2"
15. EXISTING SUBBASE GRANULAR MATERIAL, TY C, 4"
16. EXISTING LIME MODIFIED SOIL, 11 3/4"
17. EXISTING LIME MODIFIED SOIL, 10"
18. EXISTING HOT-MIX ASPHALT SHOULDER, 8"
19. EXISTING HOT-MIX ASPHALT SHOULDER, 6"
20. EXISTING AGGREGATE SHOULDERS, TYPE B
21. EXISTING CONCRETE COMBINATION CURB & GUTTER, TYPE B
22. EXISTING CONCRETE GUTTER, TYPE B
23. EXISTING PARTIAL REMAINING CONCRETE CURB & GUTTER
24. PROPOSED HOT-MIX ASPHALT SURFACE REMOVAL, 3 3/4"
25. PROPOSED PAVED SHOULDER REMOVAL
26. PROPOSED PAVEMENT REMOVAL
27. PROPOSED EXCAVATING AND GRADING EXISTING SHOULDER
28. PROPOSED COMBINATION CURB AND GUTTER REMOVAL
29. PROPOSED GUTTER REMOVAL
30. PROPOSED HOT-MIX ASPHALT SURFACE COURSE, 1 1/2"
31. PROPOSED HOT-MIX ASPHALT SURFACE COURSE, 1 1/4"
32. PROPOSED HOT-MIX ASPHALT BINDER COURSE, 2 1/4"
33. PROPOSED GRANULAR MATERIAL, TYPE C
34. PROPOSED HOT-MIX ASPHALT SHOULDER, 8"
35. PROPOSED HOT-MIX ASPHALT SHOULDER, 3 3/4"
36. PROPOSED AGGREGATE WEDGE SHOULDER, TYPE B
37. PROPOSED CONCRETE GUTTER, TYPE B
38. PROPOSED TACK COAT
39. PROPOSED LONGITUDINAL JOINT SEALANT
40. PROPOSED WATERPROOFING MEMBRANE SYSTEM



| | | | |
|---|---|---|---|
| USER NAME = humphreysb | DESIGNED - | REVISED - | |
| | DRAWN - | REVISED - | |
| PLOT SCALE = 40.0000 ' / in. | CHECKED - | REVISED - | |
| PLOT DATE = 5/13/2022 | DATE - | REVISED - | |

**STATE OF ILLINOIS**
**DEPARTMENT OF TRANSPORTATION**

**PROPOSED TYPICAL SECTIONS**

SCALE: | SHEET 9 OF 15 SHEETS | STA. 2001+15 TO STA. 2102+28

| **F.A. RTE. | SECTION | COUNTY | TOTAL SHEETS | SHEET NO. |
|---|---|---|---|---|
| ** | (Q-1,X-1,F-1)RS-2, Q-1VBDR-1 | BOND | 113 | 34 |
| **FAU 9832, FAS 1751 | | CONTRACT NO. 76K46 | | |
| | | ILLINOIS | FED. AID PROJECT | |

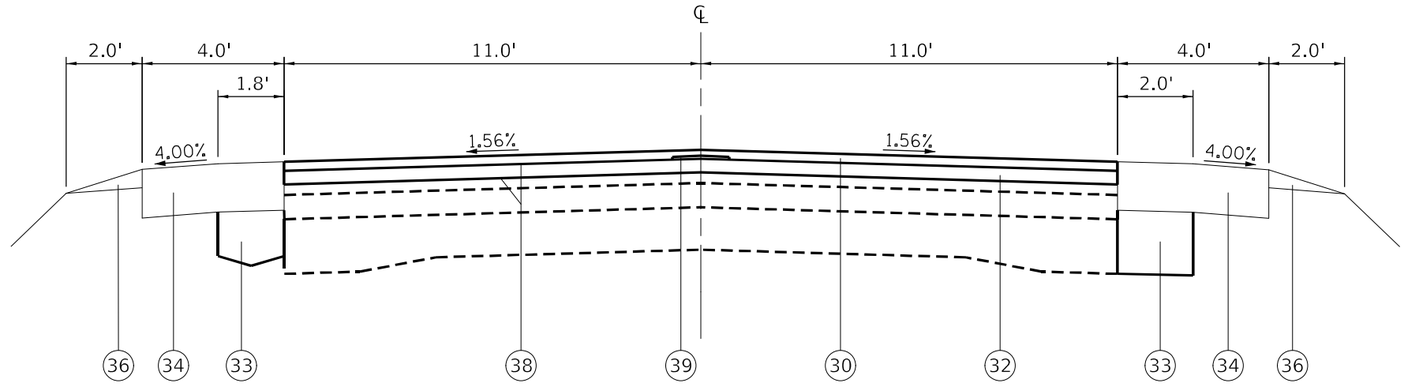


## PROPOSED TYPICAL SECTION
## FAS 1751 (US 40)

STA 2094+41 TO STA 2097+16

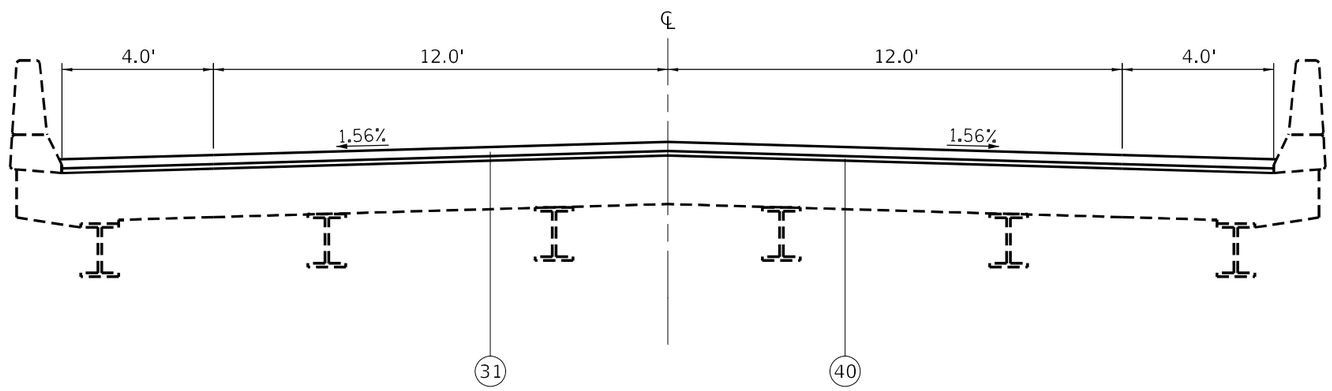


## PROPOSED TYPICAL SECTION
## S.N. 003–0018, FAS 1751 (US 40)

STA 2097+16 TO STA 2099+96

## LEGEND

1. EXISTING BITUMINOUS SURFACE COURSE, 4"
2. EXISTING BITUMINOUS SURFACE COURSE, 3 3/4"
3. EXISTING BITUMINOUS SURFACE COURSE, 3"
4. EXISTING BITUMINOUS SURFACE COURSE, 2 1/2"
5. EXISTING BITUMINOUS SURFACE COURSE, 2 1/4"
6. EXISTING BITUMINOUS SURFACE COURSE, 2"
7. EXISTING BITUMINOUS SURFACE COURSE, 1 1/2"
8. EXISTING BITUMINOUS SURFACE COURSE, 1 1/4"
9. EXISTING BITUMINOUS MICROSURFACING, 1/2"
10. EXISTING BITUMINOUS BINDER COURSE, 12 1/4"
11. EXISTING BITUMINOUS BINDER COURSE, 11 1/4"
12. EXISTING BITUMINOUS LEVELING BINDER, VARIES 2" TO 10"
13. EXISTING P.C.C. PAVEMENT, 9"-7"-9"
14. EXISTING CONCRETE DECK SLAB, 7 1/2"
15. EXISTING SUBBASE GRANULAR MATERIAL, TY C, 4"
16. EXISTING LIME MODIFIED SOIL, 11 3/4"
17. EXISTING LIME MODIFIED SOIL, 10"
18. EXISTING HOT-MIX ASPHALT SHOULDER, 8"
19. EXISTING HOT-MIX ASPHALT SHOULDER, 6"
20. EXISTING AGGREGATE SHOULDERS, TYPE B
21. EXISTING CONCRETE COMBINATION CURB & GUTTER, TYPE B
22. EXISTING CONCRETE GUTTER, TYPE B
23. EXISTING PARTIAL REMAINING CONCRETE CURB & GUTTER
24. PROPOSED HOT-MIX ASPHALT SURFACE REMOVAL, 3 3/4"
25. PROPOSED PAVED SHOULDER REMOVAL
26. PROPOSED PAVEMENT REMOVAL
27. PROPOSED EXCAVATING AND GRADING EXISTING SHOULDER
28. PROPOSED COMBINATION CURB AND GUTTER REMOVAL
29. PROPOSED GUTTER REMOVAL
30. PROPOSED HOT-MIX ASPHALT SURFACE COURSE, 1 1/2"
31. PROPOSED HOT-MIX ASPHALT SURFACE COURSE, 1 1/4"
32. PROPOSED HOT-MIX ASPHALT BINDER COURSE, 2 1/4"
33. PROPOSED GRANULAR MATERIAL, TYPE C
34. PROPOSED HOT-MIX ASPHALT SHOULDER, 8"
35. PROPOSED HOT-MIX ASPHALT SHOULDER, 3 3/4"
36. PROPOSED AGGREGATE WEDGE SHOULDER, TYPE B
37. PROPOSED CONCRETE GUTTER, TYPE B
38. PROPOSED TACK COAT
39. PROPOSED LONGITUDINAL JOINT SEALANT
40. PROPOSED WATERPROOFING MEMBRANE SYSTEM

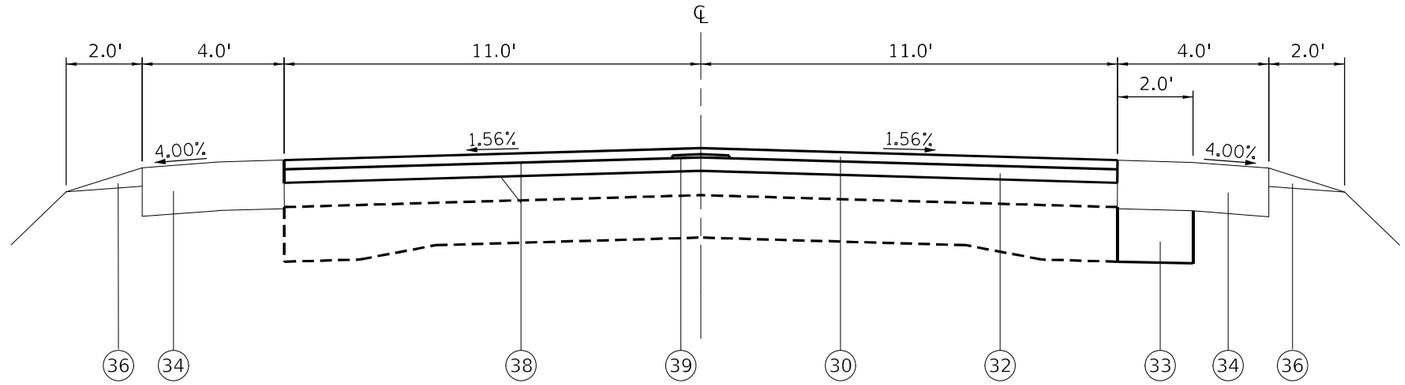


## PROPOSED TYPICAL SECTION
## FAS 1751 (US 40)

STA 2102+28 TO STA 2105+03
STA 2107+16 TO STA 2109+86

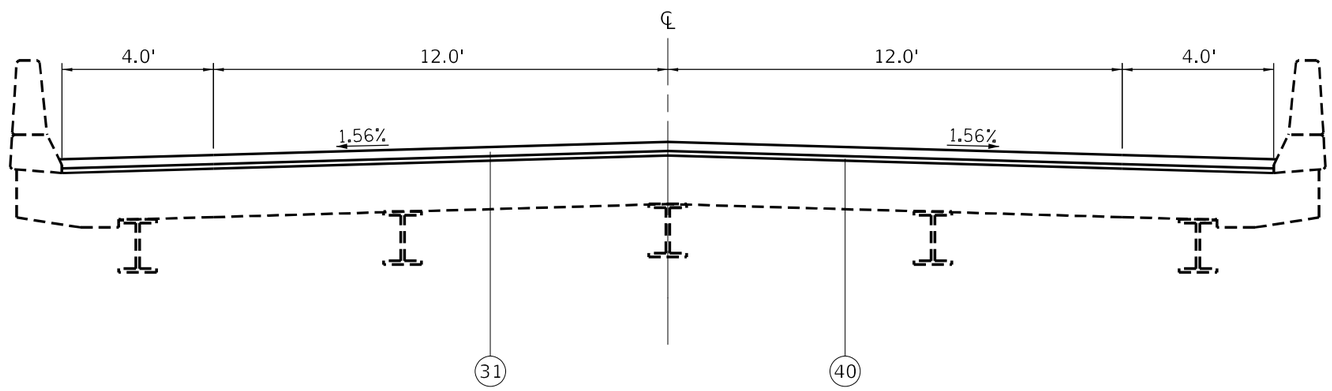


## PROPOSED TYPICAL SECTION
## S.N. 003–0019, FAS 1751 (US 40)

STA 2105+03 TO STA 2106+58

## LEGEND

1. EXISTING BITUMINOUS SURFACE COURSE, 4"
2. EXISTING BITUMINOUS SURFACE COURSE, 3 3/4"
3. EXISTING BITUMINOUS SURFACE COURSE, 3"
4. EXISTING BITUMINOUS SURFACE COURSE, 2 1/2"
5. EXISTING BITUMINOUS SURFACE COURSE, 2 1/4"
6. EXISTING BITUMINOUS SURFACE COURSE, 2"
7. EXISTING BITUMINOUS SURFACE COURSE, 1 1/2"
8. EXISTING BITUMINOUS SURFACE COURSE, 1 1/4"
9. EXISTING BITUMINOUS MICROSURFACING, 1/2"
10. EXISTING BITUMINOUS BINDER COURSE, 12 1/4"
11. EXISTING BITUMINOUS BINDER COURSE, 11 1/4"
12. EXISTING BITUMINOUS LEVELING BINDER, VARIES 2" TO 10"
13. EXISTING P.C.C. PAVEMENT, 9"-7"-9"
14. EXISTING CONCRETE DECK SLAB, 7 1/2"
15. EXISTING SUBBASE GRANULAR MATERIAL, TY C, 4"
16. EXISTING LIME MODIFIED SOIL, 11 3/4"
17. EXISTING LIME MODIFIED SOIL, 10"
18. EXISTING HOT-MIX ASPHALT SHOULDER, 8"
19. EXISTING HOT-MIX ASPHALT SHOULDER, 6"
20. EXISTING AGGREGATE SHOULDERS, TYPE B
21. EXISTING CONCRETE COMBINATION CURB & GUTTER, TYPE B
22. EXISTING CONCRETE GUTTER, TYPE B
23. EXISTING PARTIAL REMAINING CONCRETE CURB & GUTTER
24. PROPOSED HOT-MIX ASPHALT SURFACE REMOVAL, 3 3/4"
25. PROPOSED PAVED SHOULDER REMOVAL
26. PROPOSED PAVEMENT REMOVAL
27. PROPOSED EXCAVATING AND GRADING EXISTING SHOULDER
28. PROPOSED COMBINATION CURB AND GUTTER REMOVAL
29. PROPOSED GUTTER REMOVAL
30. PROPOSED HOT-MIX ASPHALT SURFACE COURSE, 1 1/2"
31. PROPOSED HOT-MIX ASPHALT SURFACE COURSE, 1 1/4"
32. PROPOSED HOT-MIX ASPHALT BINDER COURSE, 2 1/4"
33. PROPOSED GRANULAR MATERIAL, TYPE C
34. PROPOSED HOT-MIX ASPHALT SHOULDER, 8"
35. PROPOSED HOT-MIX ASPHALT SHOULDER, 3 3/4"
36. PROPOSED AGGREGATE WEDGE SHOULDER, TYPE B
37. PROPOSED CONCRETE GUTTER, TYPE B
38. PROPOSED TACK COAT
39. PROPOSED LONGITUDINAL JOINT SEALANT
40. PROPOSED WATERPROOFING MEMBRANE SYSTEM

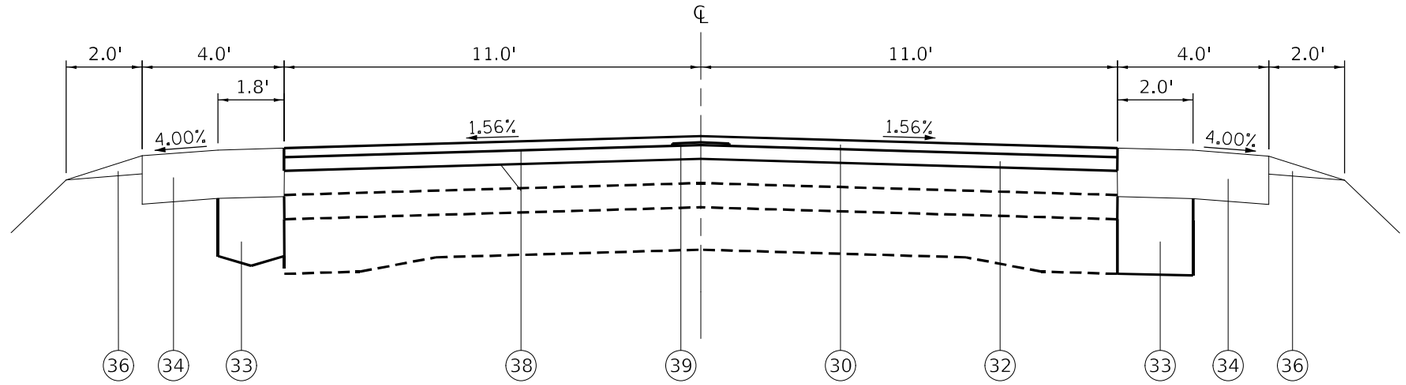


## PROPOSED TYPICAL SECTION
## FAS 1751 (US 40)

STA 2106+58 TO STA 2107+16

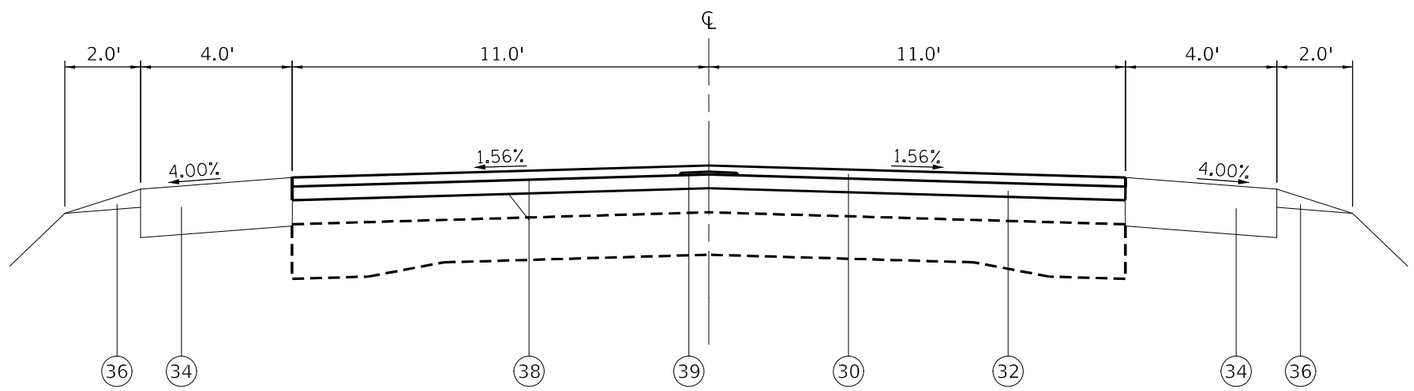


## PROPOSED TYPICAL SECTION
## FAS 1751 (US 40)

STA 2109+86 TO STA 2115+76

## LEGEND

1. EXISTING BITUMINOUS SURFACE COURSE, 4"
2. EXISTING BITUMINOUS SURFACE COURSE, 3 3/4"
3. EXISTING BITUMINOUS SURFACE COURSE, 3"
4. EXISTING BITUMINOUS SURFACE COURSE, 2 1/2"
5. EXISTING BITUMINOUS SURFACE COURSE, 2 1/4"
6. EXISTING BITUMINOUS SURFACE COURSE, 2"
7. EXISTING BITUMINOUS SURFACE COURSE, 1 1/2"
8. EXISTING BITUMINOUS SURFACE COURSE, 1 1/4"
9. EXISTING BITUMINOUS MICROSURFACING, 1/2"
10. EXISTING BITUMINOUS BINDER COURSE, 12 1/4"
11. EXISTING BITUMINOUS BINDER COURSE, 11 1/4"
12. EXISTING BITUMINOUS LEVELING BINDER, VARIES 2" TO 10"
13. EXISTING P.C.C. PAVEMENT, 9"-7"-9"
14. EXISTING CONCRETE DECK SLAB, 7 1/2"
15. EXISTING SUBBASE GRANULAR MATERIAL, TY C, 4"
16. EXISTING LIME MODIFIED SOIL, 11 3/4"
17. EXISTING LIME MODIFIED SOIL, 10"
18. EXISTING HOT-MIX ASPHALT SHOULDER, 8"
19. EXISTING HOT-MIX ASPHALT SHOULDER, 6"
20. EXISTING AGGREGATE SHOULDERS, TYPE B
21. EXISTING CONCRETE COMBINATION CURB & GUTTER, TYPE B
22. EXISTING CONCRETE GUTTER, TYPE B
23. EXISTING PARTIAL REMAINING CONCRETE CURB & GUTTER
24. PROPOSED HOT-MIX ASPHALT SURFACE REMOVAL, 3 3/4"
25. PROPOSED PAVED SHOULDER REMOVAL
26. PROPOSED PAVEMENT REMOVAL
27. PROPOSED EXCAVATING AND GRADING EXISTING SHOULDER
28. PROPOSED COMBINATION CURB AND GUTTER REMOVAL
29. PROPOSED GUTTER REMOVAL
30. PROPOSED HOT-MIX ASPHALT SURFACE COURSE, 1 1/2"
31. PROPOSED HOT-MIX ASPHALT SURFACE COURSE, 1 1/4"
32. PROPOSED HOT-MIX ASPHALT BINDER COURSE, 2 1/4"
33. PROPOSED GRANULAR MATERIAL, TYPE C
34. PROPOSED HOT-MIX ASPHALT SHOULDER, 8"
35. PROPOSED HOT-MIX ASPHALT SHOULDER, 3 3/4"
36. PROPOSED AGGREGATE WEDGE SHOULDER, TYPE B
37. PROPOSED CONCRETE GUTTER, TYPE B
38. PROPOSED TACK COAT
39. PROPOSED LONGITUDINAL JOINT SEALANT
40. PROPOSED WATERPROOFING MEMBRANE SYSTEM

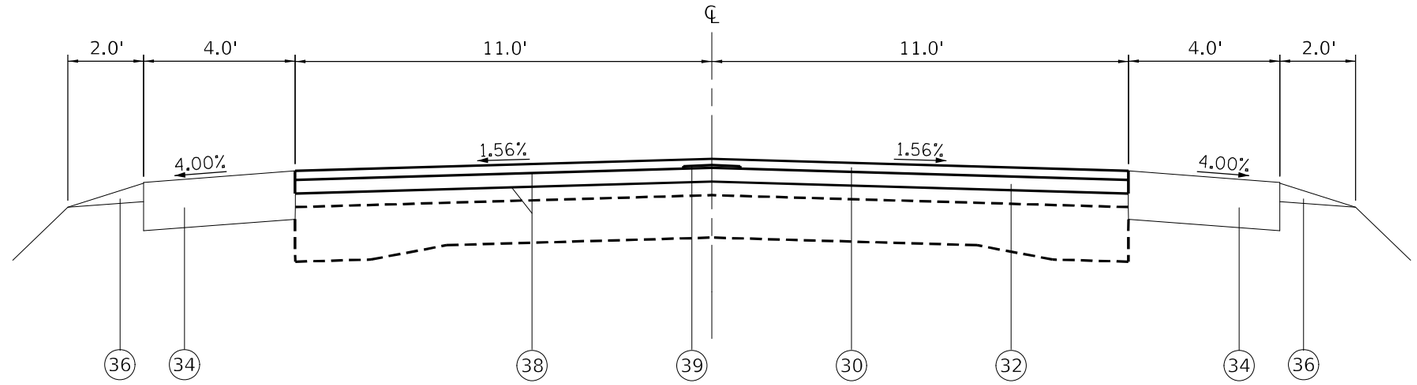


## PROPOSED TYPICAL SECTION
## FAS 1751 (US 40)

STA 2115+76 TO STA 2178+05

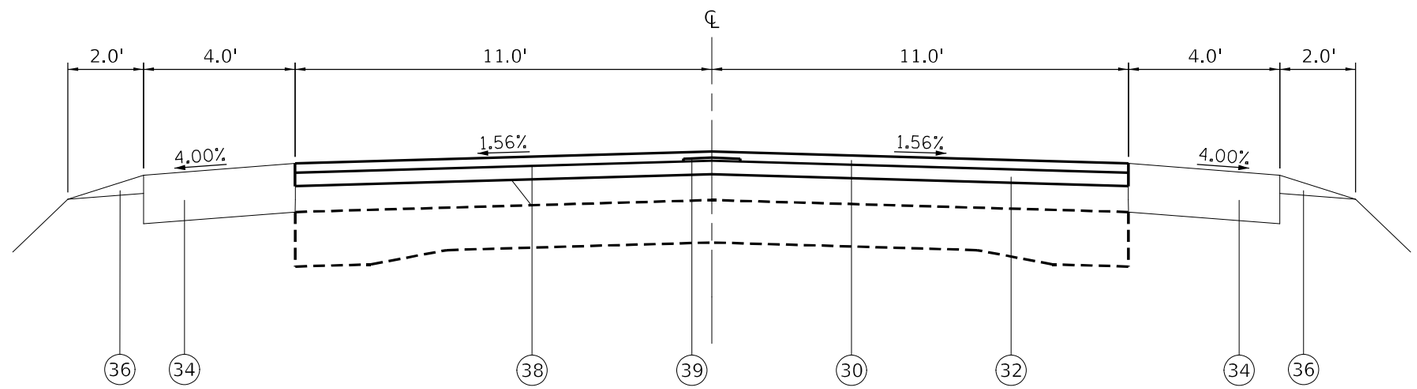


## PROPOSED TYPICAL SECTION
## FAS 1751 (US 40)

STA 2178+05 TO STA 2268+00
STA 2296+31 TO STA 2326+27

## LEGEND

1. EXISTING BITUMINOUS SURFACE COURSE, 4"
2. EXISTING BITUMINOUS SURFACE COURSE, 3 3/4"
3. EXISTING BITUMINOUS SURFACE COURSE, 3"
4. EXISTING BITUMINOUS SURFACE COURSE, 2 1/2"
5. EXISTING BITUMINOUS SURFACE COURSE, 2 1/4"
6. EXISTING BITUMINOUS SURFACE COURSE, 2"
7. EXISTING BITUMINOUS SURFACE COURSE, 1 1/2"
8. EXISTING BITUMINOUS SURFACE COURSE, 1 1/4"
9. EXISTING BITUMINOUS MICROSURFACING, 1/2"
10. EXISTING BITUMINOUS BINDER COURSE, 12 1/4"
11. EXISTING BITUMINOUS BINDER COURSE, 11 1/4"
12. EXISTING BITUMINOUS LEVELING BINDER, VARIES 2" TO 10"
13. EXISTING P.C.C. PAVEMENT, 9"-7"-9"
14. EXISTING CONCRETE DECK SLAB, 7 1/2"
15. EXISTING SUBBASE GRANULAR MATERIAL, TY C, 4"
16. EXISTING LIME MODIFIED SOIL, 11 3/4"
17. EXISTING LIME MODIFIED SOIL, 10"
18. EXISTING HOT-MIX ASPHALT SHOULDER, 8"
19. EXISTING HOT-MIX ASPHALT SHOULDER, 6"
20. EXISTING AGGREGATE SHOULDERS, TYPE B
21. EXISTING CONCRETE COMBINATION CURB & GUTTER, TYPE B
22. EXISTING CONCRETE GUTTER, TYPE B
23. EXISTING PARTIAL REMAINING CONCRETE CURB & GUTTER
24. PROPOSED HOT-MIX ASPHALT SURFACE REMOVAL, 3 3/4"
25. PROPOSED PAVED SHOULDER REMOVAL
26. PROPOSED PAVEMENT REMOVAL
27. PROPOSED EXCAVATING AND GRADING EXISTING SHOULDER
28. PROPOSED COMBINATION CURB AND GUTTER REMOVAL
29. PROPOSED GUTTER REMOVAL
30. PROPOSED HOT-MIX ASPHALT SURFACE COURSE, 1 1/2"
31. PROPOSED HOT-MIX ASPHALT SURFACE COURSE, 1 1/4"
32. PROPOSED HOT-MIX ASPHALT BINDER COURSE, 2 1/4"
33. PROPOSED GRANULAR MATERIAL, TYPE C
34. PROPOSED HOT-MIX ASPHALT SHOULDER, 8"
35. PROPOSED HOT-MIX ASPHALT SHOULDER, 3 3/4"
36. PROPOSED AGGREGATE WEDGE SHOULDER, TYPE B
37. PROPOSED CONCRETE GUTTER, TYPE B
38. PROPOSED TACK COAT
39. PROPOSED LONGITUDINAL JOINT SEALANT
40. PROPOSED WATERPROOFING MEMBRANE SYSTEM



| | | | |
|---|---|---|---|
| USER NAME = humphreysb | DESIGNED - | REVISED - | STATE OF ILLINOIS DEPARTMENT OF TRANSPORTATION |
| | DRAWN - | REVISED - | |
| PLOT SCALE = 40.0000 ' / in. | CHECKED - | REVISED - | |
| PLOT DATE = 5/13/2022 | DATE - | REVISED - | |

**PROPOSED TYPICAL SECTIONS**

SCALE: | SHEET 13 OF 15 SHEETS | STA. 2115+76 TO STA. 2326+27

| **F.A. RTE. | SECTION | COUNTY | TOTAL SHEETS | SHEET NO. |
|---|---|---|---|---|
| ** | (Q-1,X-1,F-1)RS-2, Q-1VBDR-1 | BOND | 113 | 38 |
| **FAU 9832, FAS 1751 | | CONTRACT NO. 76K46 | | |
| | | ILLINOIS | FED. AID PROJECT | |

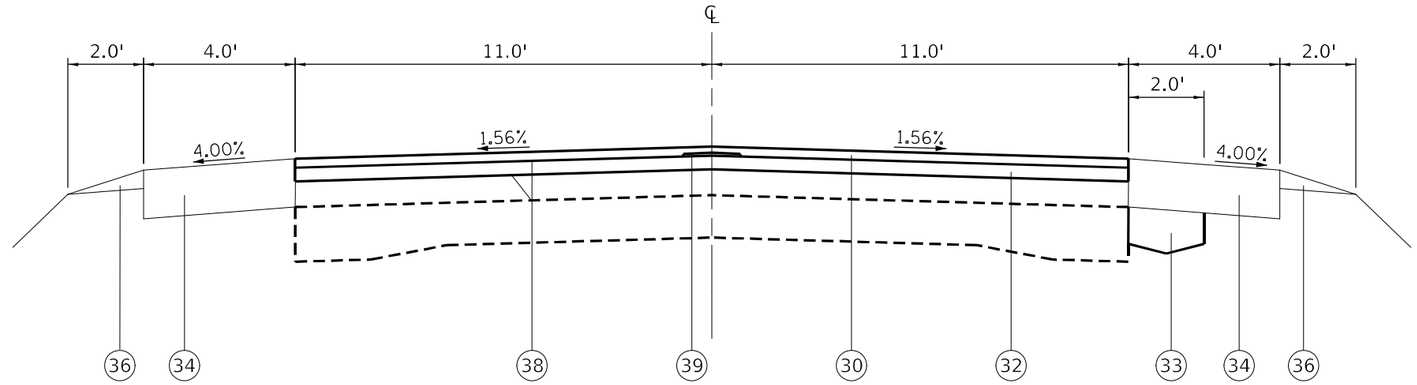


## PROPOSED TYPICAL SECTION
## FAS 1751 (US 40)

STA 2268+00 TO STA 2296+31

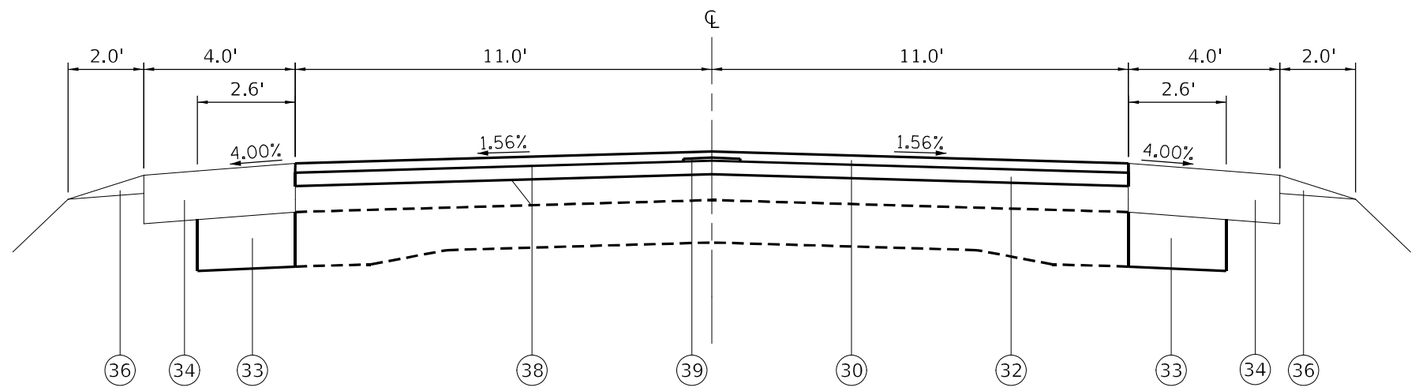


## ✳ PROPOSED TYPICAL SECTION
## FAS 1751 (US 40)

STA 2326+27 TO STA 2328+52

NOTES

✳ SEE SHEET #46 FOR ADDITIONAL TYPICAL SECTION DETAILS FOR US 40 & MAPLE STREET INTERSECTION

## LEGEND

1. EXISTING BITUMINOUS SURFACE COURSE, 4"
2. EXISTING BITUMINOUS SURFACE COURSE, 3 3/4"
3. EXISTING BITUMINOUS SURFACE COURSE, 3"
4. EXISTING BITUMINOUS SURFACE COURSE, 2 1/2"
5. EXISTING BITUMINOUS SURFACE COURSE, 2 1/4"
6. EXISTING BITUMINOUS SURFACE COURSE, 2"
7. EXISTING BITUMINOUS SURFACE COURSE, 1 1/2"
8. EXISTING BITUMINOUS SURFACE COURSE, 1 1/4"
9. EXISTING BITUMINOUS MICROSURFACING, 1/2"
10. EXISTING BITUMINOUS BINDER COURSE, 12 1/4"
11. EXISTING BITUMINOUS BINDER COURSE, 11 1/4"
12. EXISTING BITUMINOUS LEVELING BINDER, VARIES 2" TO 10"
13. EXISTING P.C.C. PAVEMENT, 9"-7"-9"
14. EXISTING CONCRETE DECK SLAB, 7 1/2"
15. EXISTING SUBBASE GRANULAR MATERIAL, TY C, 4"
16. EXISTING LIME MODIFIED SOIL, 11 3/4"
17. EXISTING LIME MODIFIED SOIL, 10"
18. EXISTING HOT-MIX ASPHALT SHOULDER, 8"
19. EXISTING HOT-MIX ASPHALT SHOULDER, 6"
20. EXISTING AGGREGATE SHOULDERS, TYPE B
21. EXISTING CONCRETE COMBINATION CURB & GUTTER, TYPE B
22. EXISTING CONCRETE GUTTER, TYPE B
23. EXISTING PARTIAL REMAINING CONCRETE CURB & GUTTER
24. PROPOSED HOT-MIX ASPHALT SURFACE REMOVAL, 3 3/4"
25. PROPOSED PAVED SHOULDER REMOVAL
26. PROPOSED PAVEMENT REMOVAL
27. PROPOSED EXCAVATING AND GRADING EXISTING SHOULDER
28. PROPOSED COMBINATION CURB AND GUTTER REMOVAL
29. PROPOSED GUTTER REMOVAL
30. PROPOSED HOT-MIX ASPHALT SURFACE COURSE, 1 1/2"
31. PROPOSED HOT-MIX ASPHALT SURFACE COURSE, 1 1/4"
32. PROPOSED HOT-MIX ASPHALT BINDER COURSE, 2 1/4"
33. PROPOSED GRANULAR MATERIAL, TYPE C
34. PROPOSED HOT-MIX ASPHALT SHOULDER, 8"
35. PROPOSED HOT-MIX ASPHALT SHOULDER, 3 3/4"
36. PROPOSED AGGREGATE WEDGE SHOULDER, TYPE B
37. PROPOSED CONCRETE GUTTER, TYPE B
38. PROPOSED TACK COAT
39. PROPOSED LONGITUDINAL JOINT SEALANT
40. PROPOSED WATERPROOFING MEMBRANE SYSTEM

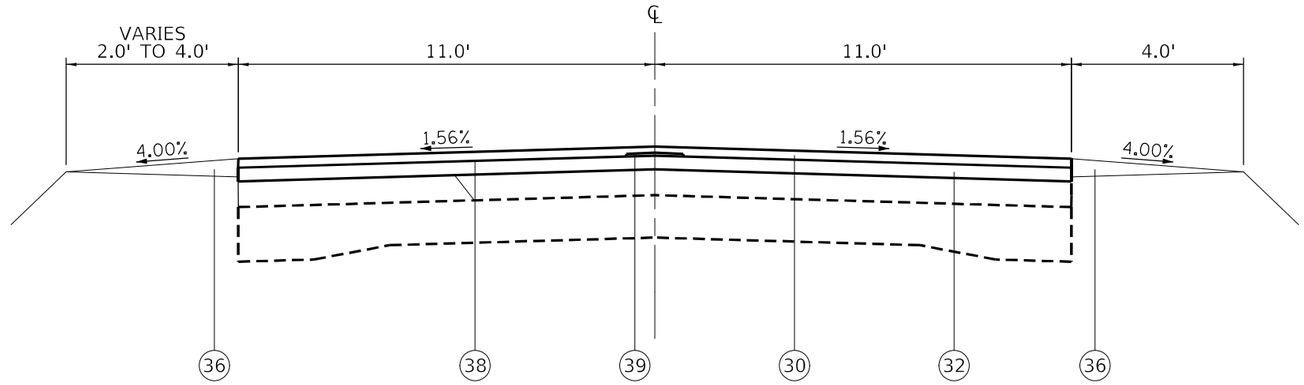


## PROPOSED TYPICAL SECTION
## FAS 1751 (US 40)

STA 2328+52 TO STA 2331+60

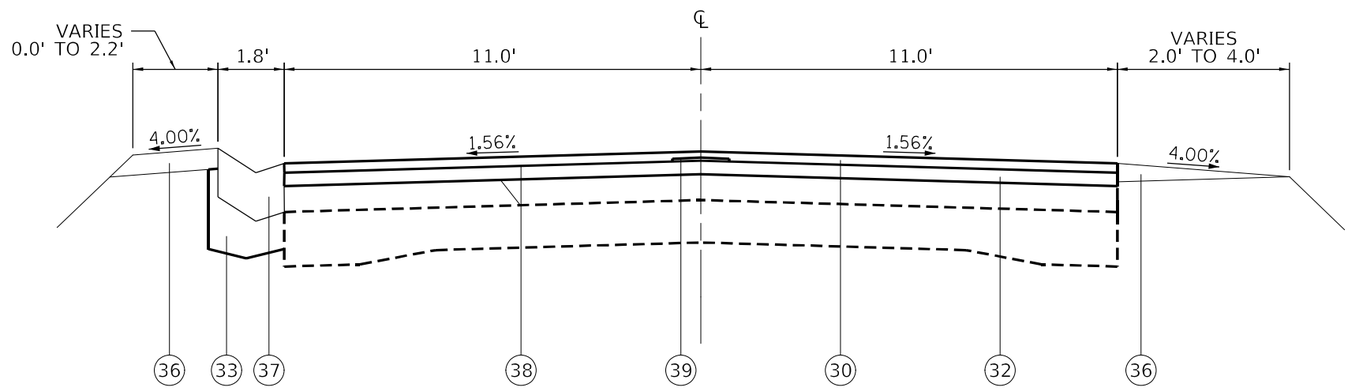


## PROPOSED TYPICAL SECTION
## FAS 1751 (US 40)

STA 2331+60 TO STA 2363+43

## LEGEND

1. EXISTING BITUMINOUS SURFACE COURSE, 4"
2. EXISTING BITUMINOUS SURFACE COURSE, 3 3/4"
3. EXISTING BITUMINOUS SURFACE COURSE, 3"
4. EXISTING BITUMINOUS SURFACE COURSE, 2 1/2"
5. EXISTING BITUMINOUS SURFACE COURSE, 2 1/4"
6. EXISTING BITUMINOUS SURFACE COURSE, 2"
7. EXISTING BITUMINOUS SURFACE COURSE, 1 1/2"
8. EXISTING BITUMINOUS SURFACE COURSE, 1 1/4"
9. EXISTING BITUMINOUS MICROSURFACING, 1/2"
10. EXISTING BITUMINOUS BINDER COURSE, 12 1/4"
11. EXISTING BITUMINOUS BINDER COURSE, 11 1/4"
12. EXISTING BITUMINOUS LEVELING BINDER, VARIES 2" TO 10"
13. EXISTING P.C.C. PAVEMENT, 9"-7"-9"
14. EXISTING CONCRETE DECK SLAB, 7 1/2"
15. EXISTING SUBBASE GRANULAR MATERIAL, TY C, 4"
16. EXISTING LIME MODIFIED SOIL, 11 3/4"
17. EXISTING LIME MODIFIED SOIL, 10"
18. EXISTING HOT-MIX ASPHALT SHOULDER, 8"
19. EXISTING HOT-MIX ASPHALT SHOULDER, 6"
20. EXISTING AGGREGATE SHOULDERS, TYPE B
21. EXISTING CONCRETE COMBINATION CURB & GUTTER, TYPE B
22. EXISTING CONCRETE GUTTER, TYPE B
23. EXISTING PARTIAL REMAINING CONCRETE CURB & GUTTER
24. PROPOSED HOT-MIX ASPHALT SURFACE REMOVAL, 3 3/4"
25. PROPOSED PAVED SHOULDER REMOVAL
26. PROPOSED PAVEMENT REMOVAL
27. PROPOSED EXCAVATING AND GRADING EXISTING SHOULDER
28. PROPOSED COMBINATION CURB AND GUTTER REMOVAL
29. PROPOSED GUTTER REMOVAL
30. PROPOSED HOT-MIX ASPHALT SURFACE COURSE, 1 1/2"
31. PROPOSED HOT-MIX ASPHALT SURFACE COURSE, 1 1/4"
32. PROPOSED HOT-MIX ASPHALT BINDER COURSE, 2 1/4"
33. PROPOSED GRANULAR MATERIAL, TYPE C
34. PROPOSED HOT-MIX ASPHALT SHOULDER, 8"
35. PROPOSED HOT-MIX ASPHALT SHOULDER, 3 3/4"
36. PROPOSED AGGREGATE WEDGE SHOULDER, TYPE B
37. PROPOSED CONCRETE GUTTER, TYPE B
38. PROPOSED TACK COAT
39. PROPOSED LONGITUDINAL JOINT SEALANT
40. PROPOSED WATERPROOFING MEMBRANE SYSTEM

## EARTHWORK SCHEDULE

| STATION | CUT AREA | FILL AREA | EARTH EXCAVATION | EARTH EXCAVATION ADJ. FOR 25% SHRINKAGE | EMBANKMENT | BALANCE WASTE (+) SHORTAGE (-) |
|---|---|---|---|---|---|---|
| | SQ FT | SQ FT | CU YD | CU YD | CU YD | CU YD |
| US 40 | | | | | | |
| 1950+85.00 | 0.00 | 2.73 | 0.00 | 0.00 | 0.00 | 0.00 |
| 1950+95.00 | 0.00 | 2.73 | 0.00 | 0.00 | 1.01 | -1.01 |
| 1951+65.00 | 0.00 | 3.32 | 0.00 | 0.00 | 7.84 | -7.84 |
| 1952+00.00 | 0.00 | 0.00 | 0.00 | 0.00 | 2.15 | -2.15 |
| 1952+35.00 | 0.00 | 1.42 | 0.00 | 0.00 | 0.92 | -0.92 |
| 1952+60.00 | 0.00 | 7.06 | 0.00 | 0.00 | 3.93 | -3.93 |
| 1953+45.00 | 0.00 | 6.08 | 0.00 | 0.00 | 20.68 | -20.68 |
| 1954+35.00 | 0.00 | 4.57 | 0.00 | 0.00 | 17.75 | -17.75 |
| 1954+48.00 | 0.00 | 4.57 | 0.00 | 0.00 | 2.20 | -2.20 |
| SUBTOTALS | | | 0.00 | 0.00 | 56.48 | -56.48 |
| NE QUADRANT OF US 40 & MAPLE STREET | | | | | | |
| 0+00.00 | 3.13 | 3.95 | 0.00 | 0.00 | 0.00 | 0.00 |
| 0+20.00 | 3.15 | 3.80 | 2.33 | 1.75 | 2.87 | -1.12 |
| 0+40.00 | 3.20 | 3.93 | 2.35 | 1.76 | 2.86 | -1.10 |
| 0+60.00 | 1.61 | 0.61 | 1.78 | 1.34 | 1.68 | -0.34 |
| 0+80.00 | 5.24 | 0.00 | 2.54 | 1.91 | 0.23 | 1.68 |
| 1+00.00 | 7.69 | 0.00 | 0.00 | 0.00 | 0.00 | 0.00 |
| 1+20.00 | 14.17 | 0.00 | 8.10 | 6.08 | 0.00 | 6.08 |
| 1+40.00 | 14.77 | 0.00 | 10.72 | 8.04 | 0.00 | 8.04 |
| 1+60.00 | 15.50 | 0.00 | 11.21 | 8.41 | 0.00 | 8.41 |
| 1+80.00 | 9.57 | 0.00 | 9.29 | 6.97 | 0.00 | 6.97 |
| 2+00.00 | 3.65 | 0.00 | 4.90 | 3.68 | 0.00 | 3.68 |
| 2+20.00 | 0.27 | 0.00 | 1.45 | 1.09 | 0.00 | 1.09 |
| 2+34.94 | 2.30 | 1.12 | 0.71 | 0.53 | 0.31 | 0.22 |
| SUBTOTALS | | | 55.38 | 41.56 | 7.95 | 33.61 |
| NW QUADRANT OF US 40 & MAPLE STREET | | | | | | |
| 0+00.00 | 3.56 | 0.00 | 0.00 | 0.00 | 0.00 | 0.00 |
| 0+20.00 | 0.00 | 1.33 | 1.32 | 0.99 | 0.49 | 0.50 |
| 0+40.00 | 4.65 | 0.00 | 1.72 | 1.29 | 0.49 | 0.80 |
| 0+60.00 | 8.53 | 0.00 | 4.88 | 3.66 | 0.00 | 3.66 |
| 0+80.00 | 9.55 | 0.00 | 6.70 | 5.03 | 0.00 | 5.03 |
| 1+00.00 | 10.16 | 0.00 | 0.00 | 0.00 | 0.00 | 0.00 |
| 1+20.00 | 8.59 | 0.00 | 6.94 | 5.21 | 0.00 | 5.21 |
| 1+40.00 | 6.87 | 0.00 | 5.73 | 4.30 | 0.00 | 4.30 |
| 1+60.00 | 5.32 | 0.00 | 4.51 | 3.38 | 0.00 | 3.38 |
| 1+80.00 | 3.93 | 3.46 | 3.43 | 2.57 | 1.28 | 1.29 |
| 1+87.13 | 7.13 | 0.00 | 1.46 | 1.10 | 0.46 | 0.64 |
| SUBTOTALS | | | 36.69 | 27.53 | 2.72 | 24.81 |
| SE QUADRANT OF US 40 & MAPLE STREET | | | | | | |
| 0+00.00 | 3.72 | 0.00 | 0.00 | 0.00 | 0.00 | 0.00 |
| 0+20.00 | 2.34 | 0.00 | 2.24 | 1.68 | 0.00 | 1.68 |
| 0+40.00 | 3.67 | 0.00 | 2.23 | 1.67 | 0.00 | 1.67 |
| 0+60.00 | 2.54 | 0.00 | 2.30 | 1.73 | 0.00 | 1.73 |
| 0+80.00 | 6.33 | 0.00 | 3.29 | 2.47 | 0.00 | 2.47 |
| 1+00.00 | 6.17 | 0.00 | 0.00 | 0.00 | 0.00 | 0.00 |
| 1+20.00 | 4.79 | 0.00 | 4.06 | 3.05 | 0.00 | 3.05 |
| 1+40.00 | 5.32 | 0.00 | 3.74 | 2.81 | 0.00 | 2.81 |
| 1+60.00 | 4.11 | 0.00 | 3.49 | 2.62 | 0.00 | 2.62 |
| 1+80.00 | 4.65 | 7.61 | 3.24 | 2.43 | 2.82 | -0.39 |
| 1+98.63 | 2.74 | 1.37 | 2.55 | 1.91 | 3.10 | -1.19 |
| SUBTOTALS | | | 27.14 | 20.37 | 5.92 | 14.45 |
| SW QUADRANT OF US 40 & MAPLE STREET | | | | | | |
| 0+00.00 | 3.60 | 0.33 | 0.00 | 0.00 | 0.00 | 0.00 |
| 0+20.00 | 4.30 | 3.39 | 2.93 | 2.20 | 1.38 | 0.82 |
| 0+40.00 | 7.75 | 0.00 | 4.46 | 3.35 | 1.26 | 2.09 |
| 0+60.00 | 12.40 | 0.00 | 7.46 | 5.60 | 0.00 | 5.60 |
| 0+80.00 | 11.55 | 0.00 | 8.87 | 6.65 | 0.00 | 6.65 |
| 1+00.00 | 12.75 | 0.00 | 0.00 | 0.00 | 0.00 | 0.00 |
| 1+20.00 | 13.95 | 0.00 | 9.89 | 7.42 | 0.00 | 7.42 |
| 1+40.00 | 13.68 | 0.00 | 10.23 | 7.67 | 0.00 | 7.67 |
| 1+60.00 | 11.66 | 0.00 | 9.39 | 7.04 | 0.00 | 7.04 |
| 1+80.00 | 10.54 | 0.04 | 8.22 | 6.17 | 0.01 | 6.16 |
| 2+00.00 | 8.58 | 0.80 | 7.08 | 5.31 | 0.31 | 5.00 |
| 2+20.00 | 5.49 | 0.48 | 5.21 | 3.91 | 0.47 | 3.44 |
| 2+29.81 | 3.17 | 2.70 | 1.57 | 1.18 | 0.58 | 0.60 |
| SUBTOTALS | | | 75.31 | 56.50 | 4.01 | 52.49 |
| TOTALS | | | 195 | 150 | 80 | 70 |

## SIGN SCHEDULE

| STATION | OFFSET | COMMON SIGN NAME | SIGN CODE | SIGN PANEL - TYPE 1 | REMOVE SIGN PANEL ASSEMBLY - TYPE A | REMOVE SIGN PANEL ASSEMBLY - TYPE B | REMOVE SIGN PANEL - TYPE 1 | TELESCOPING STEEL SIGN SUPPORT | WOOD SIGN SUPPORT |
|---|---|---|---|---|---|---|---|---|---|
| | | | | SQ FT | EACH | EACH | SQ FT | FOOT | FOOT |
| US 40 | | | | | | | | | |
| 1992+28 | 30.0 RT | STOP SIGN | R1-1 | 9.0 | | | 6.3 | 15.5 | |
| 2325+93 | 24.0 RT | US 40 | M1-4 | 4.0 | | | | | 15 |
| | | <- (AHEAD) | M6-3 | 2.2 | | | | | |
| 2326+43 | 24.0 RT | STOP SIGN | R1-1 | 9.0 | 1 | | | | 14 |
| | | ALL WAY | R1-4 | 0.7 | | | | | |
| 2327+54 | 24.0 LT | STOP SIGN | R1-1 | 9.0 | | | | | 14 |
| | | ALL WAY | R1-4 | 0.7 | | | | | |
| 2327+55 | 24.0 LT | | | | | 1 | | | |
| 2328+04 | 25.0 LT | US 40 | M1-4 | 4.0 | | | | | 16 |
| | | <- (AHEAD) | M6-3 | 2.2 | | | | | |
| | | | SUBTOTALS | 40.8 | 1 | 1 | 6.3 | 15.5 | 59 |
| MAPLE STREET | | | | | | | | | |
| 99+00 | 35.5 LT | JCT | M2-1 (BL) | 2.2 | 1 | | | | 15 |
| | | I-70 | M1-1 | 4.0 | | | | | |
| 99+06 | 34.0 RT | US 40 | M1-4 | 4.0 | | | | | 15 |
| | | <--> | M6-4 | 2.2 | | | | | |
| 99+32 | 35.0 RT | | | | 1 | | | | |
| 99+56 | 47.0 RT | STOP SIGN | R1-1 | 9.0 | | | | | 14 |
| | | ALL WAY | R1-4 | 0.7 | | | | | |
| 99+56 | 30.0 LT | STOP SIGN | R1-1 | 9.0 | | | | | 14 |
| | | ALL WAY | R1-4 | 0.7 | | | | | |
| 99+80 | 20.5 RT | | | | | 1 | | | |
| 100+40 | 33.0 RT | MAPLE ST | D3-1 | 1.4 | | | | 13.0 | |
| | | RT 40 | D3-1 | 1.4 | | | | | |
| 100+60 | 22.0 LT | STOP SIGN | R1-1 | 9.0 | 1 | | | | 14 |
| | | ALL WAY | R1-4 | 0.7 | | | | | |
| 100+60 | 27.0 LT | | | | 1 | | | | |
| 101+10 | 23.0 LT | US 40 | M1-4 | 4.0 | 1 | | | | 14 |
| | | <--> | M6-4 | 2.2 | | | | | |
| | | | SUBTOTALS | 50.5 | 5 | 1 | 0.0 | 13.0 | 86 |
| | | | TOTALS | 92 | 6 | 2 | 7 | 29 | 145 |

## REMOVAL SCHEDULE

| LOCATION | PAVEMENT REMOVAL | GUTTER REMOVAL | COMBINATION CURB & GUTTER REMOVAL | SIDEWALK REMOVAL | MEDIAN REMOVAL | PIPE CULVERT REMOVAL | REMOVING INLETS | MEDIAN REMOVAL (SPECIAL) |
|---|---|---|---|---|---|---|---|---|
| | SQ YD | FOOT | FOOT | SQ FT | SQ FT | FOOT | EACH | SQ FT |
| US 40 | | | | | | | | |
| STA 2086+00 TO STA 2094+41 | 355.1 | 841 | 841 | | | | | |
| STA 2094+41 TO STA 2097+16 | 116.1 | 275 | 275 | | | | | |
| STA 2099+96 TO STA 2102+28 | 98.0 | 232 | 232 | | | | | |
| STA 2102+28 TO STA 2105+03 | 122.2 | | 275 | | | | | |
| STA 2106+58 TO STA 2107+16 | 24.5 | 58 | 58 | | | | | |
| STA 2107+16 TO STA 2109+86 | 120.0 | | 270 | | | | | |
| STA 2268+00 TO STA 2296+31 | 550.5 | 2831 | | | | | | |
| STA 2331+60 TO STA 2363+43 | 618.9 | 3183 | | | | | | |
| US 40 & IL 127 INTERSECTION | | | | | | | | |
| SW QUADRANT | | | | 117 | | | | |
| SW QUADRANT ISLAND | 120.0 | | 65 | | 260 | | | |
| NW QUADRANT | | | | 70 | | | | |
| US 40 & MAPLE STREET INTERSECTION | | | | | | | | |
| NE QUADRANT | 39.6 | | 178 | | | 21 | 1 | |
| NW QUADRANT | 35.6 | | 160 | | | | | |
| SE QUADRANT | 37.3 | | 168 | | | 61 | 2 | 356.3 |
| SW QUADRANT | 36.7 | | 165 | | | | | |
| SUBTOTALS | 2274.5 | 7420 | 2687 | 187 | 260 | 82 | 3 | 356.3 |
| TOTALS | 2275 | 7420 | 2687 | 187 | 260 | 82 | 3 | 357 |

MODEL: Default
FILE NAME: pw:\\ildot-pw.bentley.com:PWIDOT\Documents\IDOT Offices\District 8\Projects\0876K46\CADData\CADsheets\0876K46-sht-schedule.dgn

| | | | |
|---|---|---|---|
| USER NAME = humphreysb | DESIGNED - | REVISED - | |
| | DRAWN - | REVISED - | |
| PLOT SCALE = 100.0000 ' / in. | CHECKED - | REVISED - | |
| PLOT DATE = 5/13/2022 | DATE - | REVISED - | |

**STATE OF ILLINOIS**
**DEPARTMENT OF TRANSPORTATION**

**SCHEDULES OF QUANTITIES**

SCALE: | SHEET 1 OF 5 SHEETS | STA. | TO STA.

| **F.A. RTE. | SECTION | COUNTY | TOTAL SHEETS | SHEET NO. |
|---|---|---|---|---|
| ** | (Q-1,X-1,F-1)RS-2, Q-1VBDR-1 | BOND | 113 | 41 |
| **FAU 9832, FAS 1751 | | CONTRACT NO. 76K46 | | |
| | ILLINOIS FED. AID PROJECT | | | |

## PAVEMENT MARKINGS SCHEDULE

| LOCATION | | | LENGTH | THERMOPLASTIC PAVEMENT MARKINGS | | | | | | | | | | | | PAVEMENT MARKING BLACKOUT TAPE, 4" | SHORT TERM PAVEMENT MARKINGS | | SHORT TERM PAVEMENT MARKING REMOVAL | TEMPORARY PAVEMENT MARKINGS | | | | | | RAISED REFLECTIVE PAVEMENT MARKER REMOVAL | RAISED REFLECTIVE PAVEMENT MARKERS | | | PAVEMENT MARKING REMOVAL - WATER BLASTING |
|---|---|---|---|---|---|---|---|---|---|---|---|---|---|---|---|---|---|---|---|---|---|---|---|---|---|---|---|---|---|---|
| | | | | 4-INCH | | | | 6-INCH | | | 8-INCH | 12-INCH | 24-INCH | LETTERS & SYMBOLS | | | | | | 4-INCH | 6-INCH | 8-INCH | 12-INCH | 24-INCH | LETTERS & SYMBOLS | | 2-WAY | 1-WAY | | |
| | | | | SOLID LINE | | SKIP-DASH | DOTTED LINE | SOLID LINE | | SKIP-DASH | SOLID LINE | SOLID LINE | SOLID LINE | | | | | | | SOLID LINE | SOLID LINE | SOLID LINE | SOLID LINE | SOLID LINE | | | | | | |
| | | | | WHITE | YELLOW | YELLOW | WHITE | WHITE | YELLOW | YELLOW | WHITE | WHITE | WHITE | WHITE | | | | | | WHITE | WHITE | WHITE | WHITE | WHITE | WHITE | | AMBER | AMBER | CRYSTAL | |
| STATION | TO | STATION | FOOT | FOOT | FOOT | FOOT | FOOT | FOOT | FOOT | FOOT | FOOT | FOOT | FOOT | SQ FT | FOOT | FOOT | FOOT | SQ FT | | FOOT | FOOT | FOOT | FOOT | FOOT | SQ FT | EACH | EACH | EACH | EACH | SQ FT |
| US 40 | | | | | | | | | | | | | | | | | | | | | | | | | | | | | | |
| 1933+62 | TO | 1938+35 | 473 | 835 | 1470 | | | | | | | | | | | | 72 | 24 | | 2305 | | | | | | 25 | 4 | 21 | | 1538 |
| 1938+35 | TO | 1942+01 | 366 | 850 | 980 | | | | | | | | | 31.2 | | 12 | 52 | 22 | | 1830 | | | | | 31.2 | 28 | 6 | 19 | 3 | 1284 |
| 1942+01 | TO | 1948+71 | 670 | 732 | 1040 | | 74 | | | | | 370 | 115 | 218.4 | | 80 | 64 | 48 | | 1846 | | | 370 | 115 | 218.4 | 68 | 34 | 12 | 22 | 2868 |
| 1948+71 | TO | 1955+92 | 721 | 1630 | 2464 | | | | | | | | 50 | 31.2 | | 20 | 116 | 46 | | 4094 | | | | 50 | 31.2 | 49 | 16 | 28 | 5 | 2992 |
| 1955+92 | TO | 1985+03 | 2911 | 5822 | | 730 | | | | | | | | | | | 268 | 90 | | 6552 | | | | | | 37 | 37 | | | 4368 |
| 1985+03 | TO | 2001+03 | 1600 | 3700 | | | 114 | | | | | | | 156.0 | | 124 | 232 | 119 | | 3814 | | | | | 156.0 | 96 | 28 | 52 | 16 | 2856 |
| 2001+03 | TO | 2086+53 | 8550 | 17100 | | 2140 | | | | | | | | | | | 780 | 260 | | 19240 | | | | | | 107 | 107 | | | 12828 |
| 2086+53 | TO | 2096+73 | 1020 | 2040 | 1020 | 260 | | | | | | | | | 836 | | 96 | 311 | | 3320 | | | | | | 13 | 13 | | | 2214 |
| 2096+73 | TO | 2102+38 | 565 | 1130 | 1130 | | | | | | | | | | 1544 | | 52 | 532 | | 2260 | | | | | | 8 | 8 | | | 1508 |
| 2102+38 | TO | 2114+38 | 1200 | 2400 | 1200 | 300 | | | | | | | | | 4217 | | 112 | 1443 | | 3900 | | | | | | 15 | 15 | | | 2600 |
| 2114+38 | TO | 2165+00 | 5062 | 10124 | | 1265 | | | | | | | | | | | 464 | 155 | | 11389 | | | | | | 64 | 64 | | | 7594 |
| 2165+00 | TO | 2300+13 | 13513 | 27026 | | 3376 | | | | | | | | | | | 1232 | 411 | | 30402 | | | | | | 169 | 169 | | | 20268 |
| 2165+00 | TO | 2307+13 | 14213 | 1400 | 170 | 700 | | | | | | | | | | | 1296 | 432 | | 2270 | | | | | | 178 | 178 | | | 1514 |
| 2307+13 | TO | 2312+73 | 560 | 1120 | | 140 | | | | | | | | | | | 52 | 18 | | 1260 | | | | | | 7 | 7 | | | 840 |
| 2312+73 | TO | 2318+23 | 550 | 1100 | 550 | 140 | | | | | | | | | | | 52 | 18 | | 1790 | | | | | | 7 | 7 | | | 1194 |
| 2318+23 | TO | 2325+48 | 725 | 1792 | | 232 | | | | | | | | | | | 68 | 23 | | 2024 | | | | | | 14 | 14 | | | 1350 |
| 2325+48 | TO | 2327+27 | 179 | 218 | | 28 | | | | | | | 22 | | | | 20 | 7 | | 246 | | | | 22 | | 7 | 7 | | | 252 |
| 2327+27 | TO | 2328+52 | 125 | | | | | 222 | | 28 | | | 24 | | | | 12 | 4 | | | 250 | | | 24 | | 2 | 2 | | | 346 |
| 2328+52 | TO | 2343+58 | 1506 | | | | | 2848 | | 362 | | | | | | | 140 | 47 | | | 3210 | | | | | 19 | 19 | | | 3210 |
| 2343+58 | TO | 2354+38 | 1080 | | | | | 2160 | 1080 | 270 | | | | | | | 100 | 34 | | | 3510 | | | | | 14 | 14 | | | 3510 |
| 2354+38 | TO | 2363+23 | 885 | | | | | 1770 | 1770 | | | | | | | | 84 | 28 | | | 3540 | | | | | 12 | 12 | | | 3540 |
| MAPLE STREET | | | | | | | | | | | | | | | | | | | | | | | | | | | | | | |
| 98+70 | TO | 99+60 | 90 | 180 | 23 | | | | | | 90 | | 14 | | | | 12 | 4 | | 203 | | 90 | | 14 | | 4 | 2 | | 2 | 312 |
| 99+60 | TO | 99+89 | 29 | 58 | | | | | | | 134 | 99 | 22 | | | 20 | 4 | 8 | | 58 | | 134 | 99 | 22 | | 1 | 1 | | | 504 |
| 100+12 | TO | 100+42 | 30 | 60 | 8 | | | | | | | | | | | | 4 | 2 | | 68 | | | | 0 | | 1 | 1 | | | 46 |
| 100+42 | TO | 101+35 | 93 | 186 | | | | | | | | | 22 | | | | 12 | 4 | | 186 | | | | 22 | | 2 | 2 | | | 212 |
| | | | TOTALS | 99057 | | | | 10510 | | | 224 | 469 | 269 | 436.8 | 6597 | 5652 | | 4090 | | 99057 | 10510 | 224 | 469 | 269 | 436.8 | 947 | 947 | | | 79748 |

## SIDEWALK & MEDIAN SCHEDULE

| STATION | OFFSET | TO | STATION | OFFSET | PORTLAND CEMENT CONCRETE SIDEWALK 4 INCH | DETECTABLE WARNINGS | COMBINATION CONCRETE CURB & GUTTER, TYPE M-6.06 | CONCRETE MEDIAN SURFACE, 4 INCH | CURB REFLECTORS | PAINT PAVEMENT MARKING - RAISED MEDIAN | NOTES |
|---|---|---|---|---|---|---|---|---|---|---|---|
| | | | | | SQ FT | SQ FT | FOOT | SQ FT | EACH | SQ FT | |
| US 40 | | | | | | | | | | | |
| 1947+01 | 73.5' RT | TO | 1947+19 | 59.2' RT | 117 | 11 | | | | | SWQ AT IL 127 |
| 1947+32 | 20.2' RT | TO | 1947+59 | 21.7' RT | 69 | 21 | 80.0 | 273 | 14 | 52 | SWQ ISLAND AT IL 127 |
| 1947+48 | 55.0' LT | TO | 1947+52 | 40.5' LT | 70 | 11 | | | | | NWQ AT IL 127 |
| | | | | TOTALS | 256 | 43 | 80.0 | 273 | 14 | 52 | |

## GUARDRAIL SCHEDULE

| STATION | TO | STATION | LENGTH OF NEED | STEEL PLATE BEAM GUARDRAIL, TYPE A, 9 FOOT POSTS | TRAFFIC BARRIER TERMINAL, TYPE 1 (SPECIAL) TANGENT | TRAFFIC BARRIER TERMINAL, TYPE 6B | TERMINAL MARKER-DIRECT APPLIED | GUARDRAIL REFLECTORS, TYPE A | GUARDRAIL REMOVAL | NOTES |
|---|---|---|---|---|---|---|---|---|---|---|
| | | | FOOT | FOOT | EACH | EACH | EACH | EACH | FOOT | |
| 2086+67 | TO | 2097+29 | 1062.5 | 1000.0 | 1 | 1 | 1 | 7 | 1063 | WESTBOUND US 40 @ SN 003-0018 |
| 2086+67 | TO | 2097+29 | 1062.5 | 1000.0 | 1 | 1 | 1 | 7 | 1063 | EASTBOUND US 40 @ SN 003-0018 |
| 2099+83 | TO | 2105+22 | 550.0 | 450.0 | | 2 | | 6 | 550 | WESTBOUND US 40 @ SN 003-0018 & 0019 |
| 2099+83 | TO | 2105+10 | 525.0 | 425.0 | | 2 | | 6 | 525 | EASTBOUND US 40 @ SN 003-0018 & 0019 |
| 2106+51 | TO | 2114+39 | 787.5 | 725.0 | 1 | 1 | 1 | 6 | 788 | WESTBOUND US 40 @ SN 003-0019 |
| 2106+39 | TO | 2114+39 | 800.0 | 737.5 | 1 | 1 | 1 | 6 | 800 | EASTBOUND US 40 @ SN 003-0019 |
| | | | SUBTOTALS | 4337.5 | 4 | 8 | 4 | 38 | 4789 | |
| | | | TOTALS | 4338 | 4 | 8 | 4 | 38 | 4789 | |

## RESURFACING SCHEDULE

| LOCATION | | | LENGTH | EXCAVATING AND GRADING EXISTING SHOULDER | HMA SURFACE REMOVAL, 3 3/4" | HMA SURFACE COURSE, IL-9.5, MIX "C", N70 1 1/2" | HMA BINDER COURSE, IL-19.0, N70 2 1/4" | PCC BASE COURSE WIDENING 9" | LONGITUDINAL JOINT SEALANT | PAVED SHOULDER REMOVAL | AGGREGATE WEDGE SHOULDER, TYPE B | HMA SHOULDERS, 8 INCH | HMA SHOULDERS | CONCRETE GUTTER, TYPE B | SUBBASE GRANULAR MATERIAL, TY C | SHOULDER RUMBLE STRIPS, 8 INCH | BITUMINOUS MATERIALS (TACK COAT) | PCC PAVEMENT SURFACE REMOVAL | NOTES |
|---|---|---|---|---|---|---|---|---|---|---|---|---|---|---|---|---|---|---|---|
| STATION | TO | STATION | FOOT | UNIT | SQ YD | TON | TON | SQ YD | FOOT | SQ YD | TON | SQ YD | TON | FOOT | CU YD | FOOT | POUND | SQ YD | |
| US 40 | | | | | | | | | | | | | | | | | | | |
| 1933+62 | TO | 1934+03 | 41 | 1 | 101 | 9 | 13 | | 41 | 10 | 3 | 37 | | | | 82 | 68 | | |
| 1934+03 | TO | 1937+02 | 299 | 6 | 914 | 77 | 116 | | 598 | 67 | 15 | 266 | | | | 598 | 617 | | |
| 1937+02 | TO | 1941+02 | 400 | 8 | 1467 | 124 | 185 | | 800 | 89 | 20 | 356 | | | | 800 | 990 | | |
| 1941+02 | TO | 1943+35 | 233 | 5 | 855 | 72 | 108 | | 466 | 156 | 12 | 208 | | | | 466 | 577 | | |
| 1943+35 | TO | 1945+75 | 240 | 3 | 1134 | 87 | 130 | | 720 | 80 | 12 | 107 | 23 | | | 480 | 741 | | |
| 1945+75 | TO | 1948+02 | 227 | 3 | 2092 | 176 | 264 | | 681 | 152 | 15 | 202 | | | | 454 | 1412 | | |
| 1948+02 | TO | 1950+71 | 269 | 6 | 1925 | 162 | 243 | | 538 | 180 | 15 | 240 | | | | 538 | 1299 | | |
| 1950+71 | TO | 1955+93 | 522 | 11 | 1595 | 134 | 201 | | 1044 | 348 | 29 | 464 | | | | 1044 | 1077 | | |
| 1955+93 | TO | 1985+09 | 2916 | 59 | 7128 | 599 | 899 | | 2916 | | 180 | 2592 | | | | 5832 | 4812 | | |
| 1985+09 | TO | 1986+09 | 100 | 1 | 289 | 21 | 31 | | 100 | 42 | 5 | 89 | 10 | | 2 | 200 | 185 | | |
| 1986+09 | TO | 1986+69 | 60 | | 227 | 15 | 22 | | 60 | | 3 | | 12 | | | 120 | 141 | | |
| 1986+69 | TO | 1989+09 | 240 | | 1200 | 83 | 125 | | 480 | | 12 | | 45 | | | 480 | 762 | | |
| 1989+09 | TO | 1992+13 | 304 | | 1892 | 137 | 205 | | 608 | | 16 | | 57 | | | 608 | 1216 | | |
| 1992+13 | TO | 1997+15 | 502 | | 2833 | 201 | 301 | | 1168 | | 25 | | 94 | | | 1004 | 1812 | | |
| 1997+15 | TO | 2000+15 | 300 | | 1506 | 127 | 190 | | 300 | 200 | 15 | 200 | | | 4 | 600 | 1016 | | |
| 2000+15 | TO | 2001+15 | 100 | | 334 | 21 | 31 | | 100 | | 5 | | 19 | | | 200 | 205 | | |
| 2001+15 | TO | 2086+00 | 8485 | 170 | 20742 | 1743 | 2614 | | 8485 | | 498 | 7543 | | | | 16970 | 14001 | | |
| 2086+00 | TO | 2094+41 | 841 | 17 | 2056 | 173 | 260 | | 841 | | 42 | 748 | | | 75 | 1682 | 1388 | | |
| 2094+41 | TO | 2097+16 | 275 | 6 | 673 | 64 | 85 | | 275 | | 14 | 245 | | | 25 | 550 | 454 | | |
| 2097+16 | TO | 2099+96 | 280 | | | | | | 280 | | | | | | | | | | SN 003-0018 |
| 2099+96 | TO | 2102+28 | 232 | 5 | 568 | 55 | 72 | | 232 | | 12 | 207 | | | 21 | 464 | 383 | | |
| 2102+28 | TO | 2105+03 | 275 | 6 | 673 | 66 | 85 | | 275 | | 14 | 245 | | | 16 | 550 | 454 | | |
| 2105+03 | TO | 2106+58 | 155 | | | | | | 155 | | | | | | | | | | SN 003-0019 |
| 2106+58 | TO | 2107+16 | 58 | 2 | 142 | 21 | 18 | | 58 | | 3 | 52 | | | 6 | 116 | 96 | | |
| 2107+16 | TO | 2109+86 | 270 | 6 | 660 | 56 | 84 | | 270 | | 14 | 240 | | | 15 | 540 | 446 | | |
| 2109+86 | TO | 2115+76 | 590 | 12 | 1443 | 122 | 182 | | 590 | | 30 | 525 | | | | 1180 | 974 | | |
| 2115+76 | TO | 2165+00 | 4924 | 99 | 12037 | 1012 | 1517 | | 4924 | | 244 | 4377 | | | | 9848 | 8125 | | |
| 2165+00 | TO | 2178+05 | 1305 | 27 | 3190 | 268 | 402 | | 1305 | | 65 | 1160 | | | | 2610 | 2154 | | |
| 2165+00 | TO | 2268+00 | 10300 | 206 | 25178 | 2115 | 3173 | | 10300 | | 509 | 9156 | | | | 20600 | 16995 | | |
| 2268+00 | TO | 2296+31 | 2831 | 57 | 6921 | 582 | 872 | | 2831 | | 140 | 2517 | | | 105 | 5662 | 4672 | | |
| 2296+31 | TO | 2325+48 | 2917 | 59 | 7131 | 599 | 899 | | 2917 | | 145 | 2593 | | | | 5834 | 4814 | | |
| 2325+48 | TO | 2325+95 | 47 | | 58 | 5 | 8 | | 47 | | | | | | | | 39 | | |
| 2325+95 | TO | 2328+40 | 245 | | 599 | 51 | 76 | | 245 | | | | | | | | 405 | | |
| 2328+40 | TO | 2328+52 | 12 | | 15 | 2 | 2 | | 12 | | 1 | | | | | | 10 | | |
| 2328+52 | TO | 2331+60 | 308 | 4 | 753 | 64 | 95 | | 308 | | 16 | | | | | | 509 | | |
| 2331+60 | TO | 2363+43 | 3183 | 32 | 7781 | 654 | 981 | | 3183 | | 164 | | | 3183 | 118 | | 5252 | | |
| MAPLE STREET | | | | | | | | | | | | | | | | | | | |
| 98+70 | TO | 99+88 | 118 | | 458 | 63 | 104 | 40 | 119 | | 22 | 191 | | | 55 | | 515 | 252 | |
| 100+12 | TO | 101+35 | 123 | | 533 | 45 | 67 | | 123 | | 22 | 188 | | | 54 | | 360 | | |
| | | | TOTALS | 811 | 117103 | 9805 | 14660 | 40 | 48395 | 1324 | 2337 | 34748 | 260 | 3183 | 496 | 80112 | 78976 | 252 | |

## EROSION CONTROL SCHEDULE

| LOCATION | SEEDING, CLASS 2A | NITROGEN FERTILIZER NUTRIENT | PHOSPHORUS FERTILIZER NUTRIENT | POTASSIUM FERTILIZER NUTRIENT | MULCH, METHOD 2 | TEMPORARY EROSION CONTROL SEEDING | TEMPORARY DITCH CHECKS | PERIMETER EROSION BARRIER | INLET AND PIPE PROTECTION |
|---|---|---|---|---|---|---|---|---|---|
| | ACRE | POUND | POUND | POUND | ACRE | POUND | FOOT | FOOT | EACH |
| US 40 | | | | | | | | | |
| STA 1950+85 TO STA 1954+48 | 0.09 | 8.1 | 8.1 | 8.1 | 0.09 | 9.0 | 9 | 363.0 | 2 |
| US 40 & MAPLE STREET INTERSECTION | | | | | | | | | |
| NE QUADRANT | 0.11 | 9.9 | 9.9 | 9.9 | 0.11 | 32.4 | | 209.3 | |
| NW QUADRANT | 0.09 | 8.1 | 8.1 | 8.1 | 0.09 | 25.8 | | 152.5 | |
| SE QUADRANT | 0.09 | 8.1 | 8.1 | 8.1 | 0.09 | 27.3 | | 230.5 | 1 |
| SW QUADRANT | 0.16 | 14.4 | 14.4 | 14.4 | 0.16 | 47.4 | 15 | | 1 |
| SUBTOTALS | 0.54 | 48.6 | 48.6 | 48.6 | 0.54 | 141.9 | 24 | 955.3 | 4 |
| TOTALS | 0.75 | 68 | 68 | 68 | 0.75 | 142 | 24 | 956 | 4 |

## TEMPORARY RAMP SCHEDULE

| STATION | LENGTH | WIDTH | TEMPORARY RAMP | NOTES |
|---|---|---|---|---|
| | FOOT | FOOT | SQ YD | |
| US 40 | | | | |
| 1933+62 | 12.5 | 30.0 | 41.7 | BEGIN RESURFACING |
| 1938+00 | 1.5 | 182.0 | 30.4 | STOREFRONT ENTRANCE (EB) |
| 1939+50 | 1.5 | 75.0 | 12.5 | SILVER ST (WB) |
| 1941+50 | 1.5 | 62.0 | 10.4 | PARKING LOT ENTRANCE (EB) |
| 1948+02 | 12.5 | 42.0 | 58.4 | IL 127 (NB) |
| 1948+02 | 12.5 | 42.0 | 58.4 | IL 127 (SB) |
| 1950+50 | 1.5 | 56.0 | 9.4 | RESTAURANT ENTRANCE (EB) |
| 1950+50 | 1.5 | 52.0 | 8.7 | RESTAURANT ENTRANCE (WB) |
| 1952+30 | 1.5 | 87.0 | 14.5 | CLOSED STORE ENTRANCE (EB) |
| 1955+60 | 1.5 | 86.0 | 14.4 | CROWN ROAD (EB) |
| 1955+60 | 1.5 | 169.0 | 28.2 | PETERSON IND DRIVE (WB) |
| 1956+90 | 1.5 | 104.0 | 17.4 | UNMARKED BUILDING ENTRANCE (EB) |
| 1959+00 | 1.5 | 144.0 | 24.0 | BOWMAN DR (EB) |
| 1959+00 | 1.5 | 71.0 | 11.9 | UNMARKED BUILDING ENTRANCE (WB) |
| 1964+60 | 1.5 | 65.0 | 10.9 | CARLISLE WEST ENTRANCE (WB) |
| 1971+60 | 1.5 | 169.0 | 28.2 | CARLISLE EAST ENTRANCE (WB) |
| 1978+50 | 1.5 | 62.0 | 10.4 | SOUTH CENTRAL ENTRANCE (WB) |
| 1980+80 | 1.5 | 72.0 | 12.0 | CIRCLE M WEST ENTRANCE (EB) |
| 1984+50 | 1.5 | 76.0 | 12.7 | CIRCLE-M EAST ENTRANCE (EB) |
| 1992+13 | 12.5 | 51.0 | 70.9 | ANDREWS DR (EB) |
| 1995+20 | 1.5 | 41.0 | 6.9 | ENTRANCE EAST OF ANDREWS DR (EB) |
| 2097+16 | 12.5 | 30.0 | 41.7 | WESTERN APPROACH OF SN 003-0018 |
| 2099+96 | 12.5 | 30.0 | 41.7 | EASTERN APPROACH OF SN 003-0018 |
| 2105+03 | 12.5 | 30.0 | 41.7 | WESTERN APPROACH OF SN 003-0019 |
| 2106+58 | 12.5 | 30.0 | 41.7 | EASTERN APPROACH OF SN 003-0019 |
| 2115+00 | 1.5 | 115.0 | 19.2 | 2ND ST (EB) |
| 2179+69 | 1.5 | 82.0 | 13.7 | KING RD (EB) |
| 2211+80 | 1.5 | 200.0 | 33.4 | RAILROAD CROSSING ENTRANCE (WB) |
| 2218+00 | 1.5 | 42.0 | 7.0 | SCHNEIDER RD (WB) |
| 2230+30 | 1.5 | 52.0 | 8.7 | RHODE ISLAND AVE (WB) |
| 2282+50 | 1.5 | 70.0 | 11.7 | ROYAL LAKE RD |
| 2309+30 | 1.5 | 72.0 | 12.0 | 7TH ST (EB) |
| 2309+30 | 1.5 | 89.0 | 14.9 | 7TH ST (WB) |
| 2316+30 | 1.5 | 32.0 | 5.4 | MEMORIAL DR (WB) |
| 2322+80 | 1.5 | 80.0 | 13.4 | CASEY'S WEST ENTRANCE (WB) |
| 2325+20 | 1.5 | 76.0 | 12.7 | CASEY'S WEST ENTRANCE (EB) |
| 2327+27 | 12.5 | 24.0 | 33.4 | MAPLE ST (NB) |
| 2327+27 | 12.5 | 36.0 | 50.0 | MAPLE ST (SB) |
| 2331+50 | 1.5 | 70.0 | 11.7 | ORCHARD ST (WB) |
| 2363+43 | 12.5 | 22.0 | 30.6 | FAYETTE COUNTY LINE |
| MAPLE STREET | | | | |
| 98+70 | 1.5 | 28.0 | 4.7 | SOUTH OF US 40 |
| 101+35 | 1.5 | 24.0 | 4.0 | NORTH OF US 40 |
| SUBTOTALS | | | 945.6 | |
| TOTALS | | | 946 | |

## PATCHING SCHEDULE (1 OF 3)

| STATION | LANE | LENGTH | WIDTH | CLASS C PATCHES | | | | | | |
|---|---|---|---|---|---|---|---|---|---|---|
| | | | | 15-INCH | | | 17-INCH | | 18-INCH | |
| | | | | TYPE II | TYPE III | TYPE IV | TYPE II | TYPE III | TYPE II | TYPE IV |
| | | FOOT | FOOT | SQ YD | SQ YD | SQ YD | SQ YD | SQ YD | SQ YD | SQ YD |
| IL 157 | | | | | | | | | | |
| 1954+22 | EB | 6 | 12 | | | | | | 8 | |
| | WB | 6 | 12 | | | | | | 8 | |
| 1959+50 | EB | 6 | 12 | 8 | | | | | | |
| | WB | 6 | 12 | 8 | | | | | | |
| 1964+78 | EB | 6 | 12 | 8 | | | | | | |
| | WB | 6 | 12 | 8 | | | | | | |
| 1970+06 | EB | 6 | 12 | 8 | | | | | | |
| | WB | 6 | 12 | 8 | | | | | | |
| 1975+34 | EB | 6 | 12 | 8 | | | | | | |
| | WB | 6 | 12 | 8 | | | | | | |
| 2001+74 | EB | 12 | 12 | | 16 | | | | | |
| | WB | 12 | 12 | | 16 | | | | | |
| 2007+02 | EB | 12 | 12 | | 16 | | | | | |
| | WB | 12 | 12 | | 16 | | | | | |
| 2012+30 | EB | 6 | 12 | 8 | | | | | | |
| | WB | 6 | 12 | 8 | | | | | | |
| 2017+58 | EB | 6 | 12 | 8 | | | | | | |
| | WB | 6 | 12 | 8 | | | | | | |
| 2020+22 | EB | 12 | 12 | | 16 | | | | | |
| | WB | 12 | 12 | | 16 | | | | | |
| 2021+28 | EB | 6 | 12 | 8 | | | | | | |
| | WB | 6 | 12 | 8 | | | | | | |
| 2022+86 | EB | 8 | 12 | 11 | | | | | | |
| | WB | 8 | 12 | 11 | | | | | | |
| 2023+92 | EB | 6 | 12 | 8 | | | | | | |
| | WB | 6 | 12 | 8 | | | | | | |
| 2028+14 | EB | 6 | 12 | 8 | | | | | | |
| | WB | 6 | 12 | 8 | | | | | | |
| 2033+42 | EB | 15 | 12 | | 20 | | | | | |
| | WB | 15 | 12 | | 20 | | | | | |
| 2038+70 | EB | 15 | 12 | | 20 | | | | | |
| | WB | 15 | 12 | | 20 | | | | | |
| 2041+34 | EB | 6 | 12 | 8 | | | | | | |
| | WB | 6 | 12 | 8 | | | | | | |
| 2043+98 | EB | 10 | 12 | 14 | | | | | | |
| | WB | 10 | 12 | 14 | | | | | | |
| 2049+26 | EB | 10 | 12 | 14 | | | | | | |
| | WB | 10 | 12 | 14 | | | | | | |
| 2051+90 | EB | 20 | 12 | | | 27 | | | | |
| | WB | 20 | 12 | | | 27 | | | | |
| 2065+10 | EB | 10 | 12 | 14 | | | | | | |
| | WB | 10 | 12 | 14 | | | | | | |
| 2070+38 | EB | 8 | 12 | 11 | | | | | | |
| | WB | 8 | 12 | 11 | | | | | | |
| 2080+94 | EB | 6 | 12 | 8 | | | | | | |
| | WB | 6 | 12 | 8 | | | | | | |
| 2083+58 | EB | 8 | 12 | 11 | | | | | | |
| | WB | 8 | 12 | 11 | | | | | | |
| SUBTOTALS | | | | 326 | 176 | 54 | 0 | 0 | 16 | 0 |

PATCHING SCHEDULE, CONTINUED (2 OF 3)

| STATION | LANE | LENGTH | WIDTH | CLASS C PATCHES | | | | | | |
|---|---|---|---|---|---|---|---|---|---|---|
| | | | | 15-INCH | | | 17-INCH | | 18-INCH | |
| | | | | TYPE II | TYPE III | TYPE IV | TYPE II | TYPE III | TYPE II | TYPE IV |
| | | FOOT | FOOT | SQ YD | SQ YD | SQ YD | SQ YD | SQ YD | SQ YD | SQ YD |
| 2086+22 | EB | 6 | 12 | 8 | | | | | | |
| | WB | 6 | 12 | 8 | | | | | | |
| 2087+28 | EB | 8 | 12 | 11 | | | | | | |
| | WB | 8 | 12 | 11 | | | | | | |
| 2096+78 | EB | 20 | 12 | | | | | | | 27 |
| | WB | 20 | 12 | | | | | | | 27 |
| 2099+42 | EB | 6 | 12 | 8 | | | | | | |
| | WB | 6 | 12 | 8 | | | | | | |
| 2102+06 | EB | 8 | 12 | 11 | | | | | | |
| | WB | 8 | 12 | 11 | | | | | | |
| 2104+70 | EB | 12 | 12 | | | | | 16 | | |
| | WB | 12 | 12 | | | | | 16 | | |
| 2105+76 | EB | 6 | 12 | | | | 8 | | | |
| | WB | 6 | 12 | | | | 8 | | | |
| 2107+34 | EB | 8 | 12 | | | | 11 | | | |
| | WB | 8 | 12 | | | | 11 | | | |
| 2109+98 | EB | 6 | 12 | | | | 8 | | | |
| | WB | 6 | 12 | | | | 8 | | | |
| 2112+62 | EB | 6 | 12 | | | | 8 | | | |
| | WB | 6 | 12 | | | | 8 | | | |
| 2115+26 | EB | 6 | 12 | | | | 8 | | | |
| | WB | 6 | 12 | | | | 8 | | | |
| 2133+74 | EB | 6 | 12 | 8 | | | | | | |
| | WB | 6 | 12 | 8 | | | | | | |
| 2136+38 | EB | 8 | 12 | 11 | | | | | | |
| | WB | 8 | 12 | 11 | | | | | | |
| 2139+02 | EB | 6 | 12 | 8 | | | | | | |
| | WB | 6 | 12 | 8 | | | | | | |
| 2141+66 | EB | 6 | 12 | 8 | | | | | | |
| | WB | 6 | 12 | 8 | | | | | | |
| 2149+58 | EB | 6 | 12 | 8 | | | | | | |
| | WB | 6 | 12 | 8 | | | | | | |
| 2160+14 | EB | 8 | 12 | 11 | | | | | | |
| | WB | 8 | 12 | 11 | | | | | | |
| 2162+78 | EB | 10 | 12 | 14 | | | | | | |
| | WB | 10 | 12 | 14 | | | | | | |
| 2165+42 | EB | 8 | 12 | 11 | | | | | | |
| | WB | 8 | 12 | 11 | | | | | | |
| 2168+06 | EB | 6 | 12 | 8 | | | | | | |
| | WB | 6 | 12 | 8 | | | | | | |
| 2170+70 | EB | 6 | 12 | 8 | | | | | | |
| | WB | 6 | 12 | 8 | | | | | | |
| 2175+98 | EB | 6 | 12 | 8 | | | | | | |
| | WB | 6 | 12 | 8 | | | | | | |
| 2177+56 | EB | 10 | 12 | 14 | | | | | | |
| | WB | 10 | 12 | 14 | | | | | | |
| 2181+26 | EB | 6 | 12 | | | | 8 | | | |
| | WB | 6 | 12 | | | | 8 | | | |
| 2186+54 | EB | 8 | 12 | | | | 11 | | | |
| | WB | 8 | 12 | | | | 11 | | | |
| 2191+82 | EB | 6 | 12 | | | | 8 | | | |
| | WB | 6 | 12 | | | | 8 | | | |
| | | | SUBTOTALS | 310 | 0 | 0 | 140 | 32 | 0 | 54 |

PATCHING SCHEDULE, CONTINUED (3 OF 3)

| STATION | LANE | LENGTH | WIDTH | CLASS C PATCHES | | | | | | |
|---|---|---|---|---|---|---|---|---|---|---|
| | | | | 15-INCH | | | 17-INCH | | 18-INCH | |
| | | | | TYPE II | TYPE III | TYPE IV | TYPE II | TYPE III | TYPE II | TYPE IV |
| | | FOOT | FOOT | SQ YD | SQ YD | SQ YD | SQ YD | SQ YD | SQ YD | SQ YD |
| 2194+46 | EB | 6 | 12 | | | | 8 | | | |
| | WB | 6 | 12 | | | | 8 | | | |
| 2197+10 | EB | 6 | 12 | | | | 8 | | | |
| | WB | 6 | 12 | | | | 8 | | | |
| 2202+38 | EB | 8 | 12 | | | | 11 | | | |
| | WB | 8 | 12 | | | | 11 | | | |
| 2207+66 | EB | 6 | 12 | | | | 8 | | | |
| | WB | 6 | 12 | | | | 8 | | | |
| 2210+30 | EB | 12 | 12 | | | | | 16 | | |
| | WB | 12 | 12 | | | | | 16 | | |
| 2218+22 | EB | 16 | 12 | | | | | 22 | | |
| | WB | 16 | 12 | | | | | 22 | | |
| 2234+06 | EB | 12 | 12 | | | | | 16 | | |
| | WB | 12 | 12 | | | | | 16 | | |
| 2239+34 | EB | 6 | 12 | | | | 8 | | | |
| | WB | 6 | 12 | | | | 8 | | | |
| 2260+46 | EB | 8 | 12 | | | | 11 | | | |
| | WB | 8 | 12 | | | | 11 | | | |
| 2265+74 | EB | 8 | 12 | | | | 11 | | | |
| | WB | 8 | 12 | | | | 11 | | | |
| 2271+02 | EB | 6 | 12 | | | | 8 | | | |
| | WB | 6 | 12 | | | | 8 | | | |
| 2281+58 | EB | 6 | 12 | | | | 8 | | | |
| | WB | 6 | 12 | | | | 8 | | | |
| 2286+86 | EB | 8 | 12 | | | | 11 | | | |
| | WB | 8 | 12 | | | | 11 | | | |
| 2287+39 | EB | 6 | 12 | | | | 8 | | | |
| | WB | 6 | 12 | | | | 8 | | | |
| 2287+92 | EB | 8 | 12 | | | | 11 | | | |
| | WB | 8 | 12 | | | | 11 | | | |
| 2288+44 | EB | 6 | 12 | | | | 8 | | | |
| | WB | 6 | 12 | | | | 8 | | | |
| 2307+98 | EB | 6 | 12 | | | | 8 | | | |
| | WB | 6 | 12 | | | | 8 | | | |
| 2313+26 | EB | 6 | 12 | | | | 8 | | | |
| | WB | 6 | 12 | | | | 8 | | | |
| 2318+54 | EB | 12 | 12 | | | | | 16 | | |
| | WB | 12 | 12 | | | | | 16 | | |
| 2323+82 | EB | 12 | 12 | | | | | 16 | | |
| | WB | 12 | 12 | | | | | 16 | | |
| 2326+46 | EB | 6 | 12 | | | | 8 | | | |
| | WB | 6 | 12 | | | | 8 | | | |
| 2329+10 | EB | 12 | 12 | | | | | 16 | | |
| | WB | 12 | 12 | | | | | 16 | | |
| 2334+38 | EB | 6 | 12 | | | | 8 | | | |
| | WB | 6 | 12 | | | | 8 | | | |
| 2350+22 | EB | 8 | 12 | | | | 11 | | | |
| | WB | 8 | 12 | | | | 11 | | | |
| | | | SUBTOTALS, TABLE 3 OF 3 | 0 | 0 | 0 | 324 | 204 | 0 | 0 |
| | | | SUBTOTALS, TABLE 1 OF 3 | 326 | 176 | 54 | 0 | 0 | 16 | 0 |
| | | | SUBTOTALS, TABLE 2 OF 3 | 310 | 0 | 0 | 140 | 32 | 0 | 54 |
| | | | 20% ANTICIPATED PATCHING | 128 | 36 | 11 | 93 | 48 | 4 | 11 |
| | | | TOTALS | 764 | 212 | 65 | 557 | 284 | 20 | 65 |

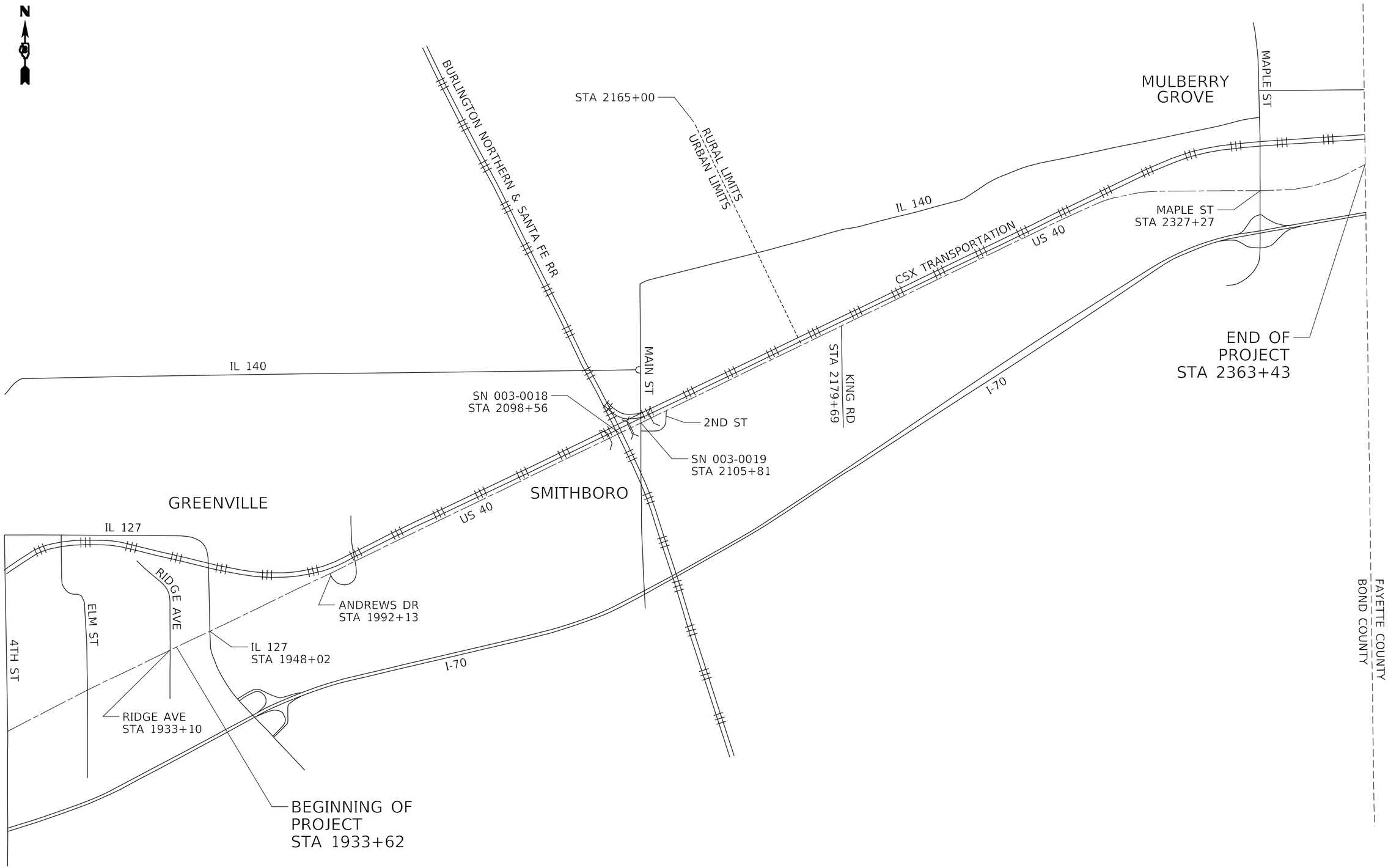


MODEL: Default
FILE NAME: pw:\\ildot-pw.bentley.com:PWIDOT\Documents\IDOT Offices\District 8\Projects\D876K46\CADData\CADsheets\D876K46-sht-details.dgn

| | | | |
|---|---|---|---|
| USER NAME = humphreysb | DESIGNED - | REVISED - | |
| | DRAWN - | REVISED - | |
| PLOT SCALE = 40.0000 ' / in. | CHECKED - | REVISED - | |
| PLOT DATE = 5/13/2022 | DATE - | REVISED - | |

**STATE OF ILLINOIS**
**DEPARTMENT OF TRANSPORTATION**

**LOCATION MAP**

SCALE: NTS | SHEET 1 OF 1 SHEETS | STA. 1933+62 TO STA. 2363+43

| **F.A. RTE. | SECTION | COUNTY | TOTAL SHEETS | SHEET NO. |
|---|---|---|---|---|
| ** | (Q-1,X-1,F-1)RS-2, Q-1VBDR-1 | BOND | 113 | 46 |
| **FAU 9832, FAS 1751 | | CONTRACT NO. 76K46 | | |
| | ILLINOIS FED. AID PROJECT | | | |

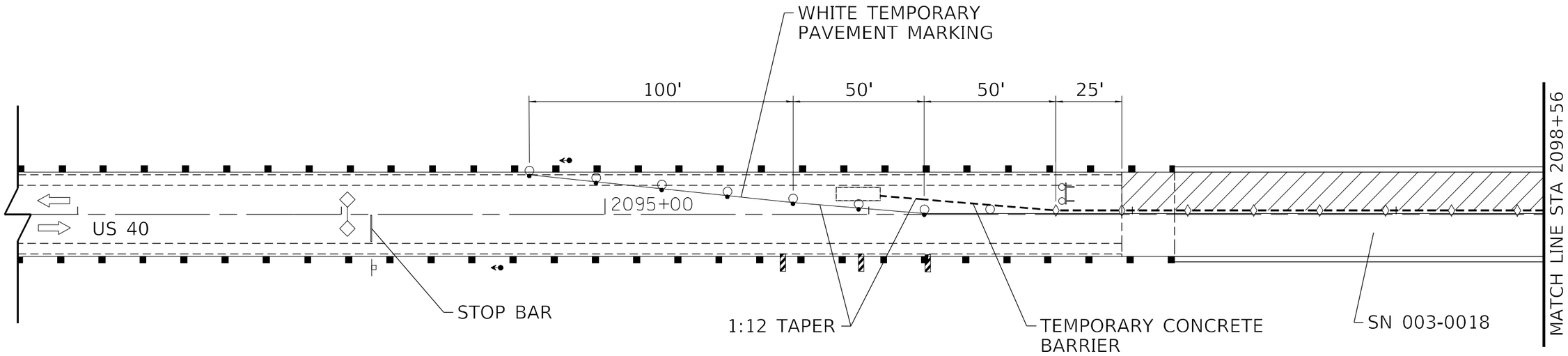


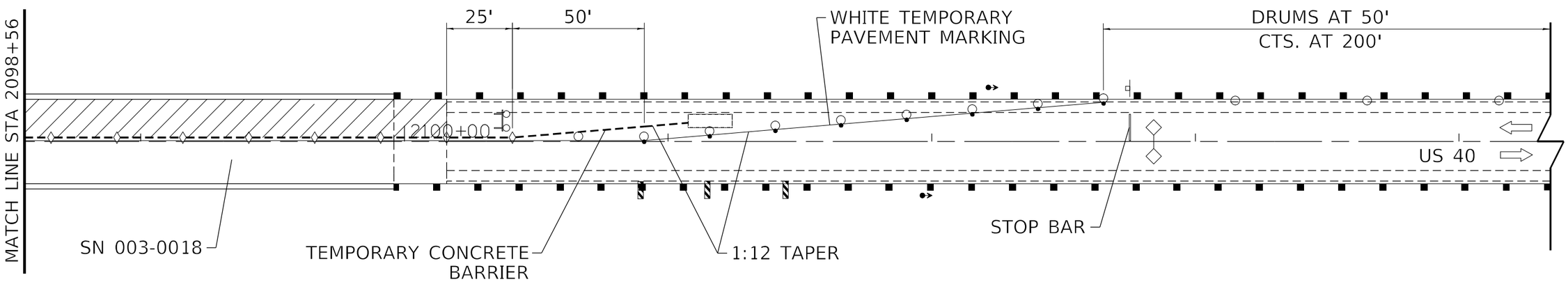


## LEGEND

- WORK AREA
- TEMPORARY CONCRETE BARRIER
- TYPE III BARRICADE WITH FLASHING LIGHTS
- IMPACT ATTENUATOR
- DRUM WITH STEADY BURNING BI-DIRECTIONAL LIGHT
- SIGN
- DOUBLE VERTICAL PANEL
- CRYSTAL, BIDIRECTIONAL GUARDRAIL/BARRIER WALL REFLECTOR
- DRUM

N

0 20 40 60
SCALE IN FEET

MODEL: Default
FILE NAME: pw://ildot-pw.bentley.com:PWIDOT/Documents/IDOT Offices/District 8/Projects/D876K46/CADData/CADsheets/D876K46-sht-plan.dgn

| | | | |
|---|---|---|---|
| USER NAME = humphreysb | DESIGNED - | REVISED - | STATE OF ILLINOIS DEPARTMENT OF TRANSPORTATION |
| | DRAWN - | REVISED - | |
| PLOT SCALE = 40.0000 ' / in. | CHECKED - | REVISED - | |
| PLOT DATE = 5/13/2022 | DATE - | REVISED - | |

**STAGE 1 CONSTRUCTION**
**SN 003–0018**

SCALE: 1" = 20' | SHEET 1 OF 2 SHEETS | STA. TO STA.

| **F.A. RTE. | SECTION | COUNTY | TOTAL SHEETS | SHEET NO. |
|---|---|---|---|---|
| ** | (Q-1,X-1,F-1)RS-2, Q-1VBDR-1 | BOND | 113 | 47 |
| **FAU 9832, FAS 1751 | | CONTRACT NO. 76K46 | | |
| | | ILLINOIS | FED. AID PROJECT | |

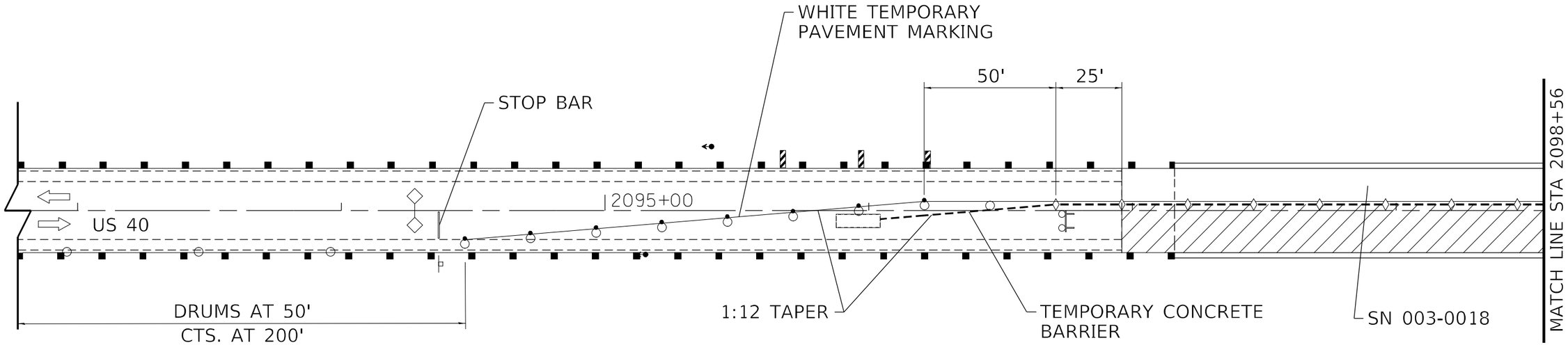


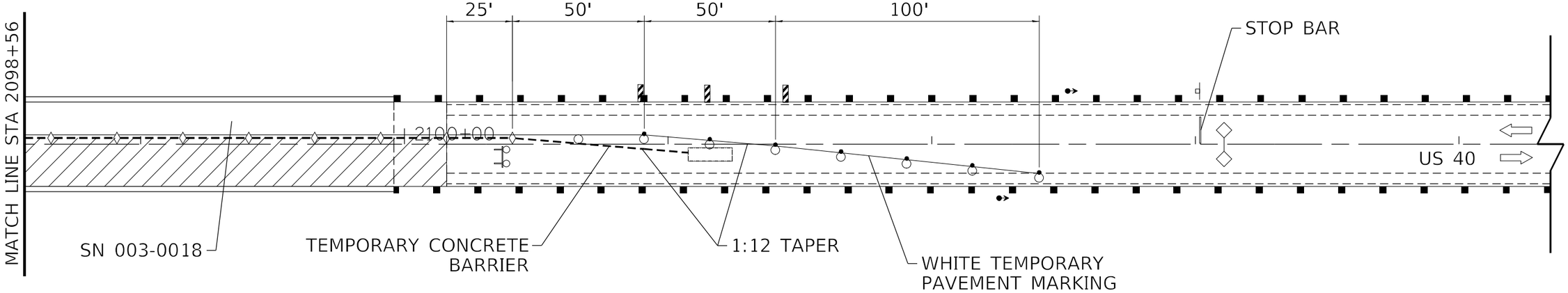


## LEGEND

- WORK AREA
- TEMPORARY CONCRETE BARRIER
- TYPE III BARRICADE WITH FLASHING LIGHTS
- IMPACT ATTENUATOR
- DRUM WITH STEADY BURNING BI-DIRECTIONAL LIGHT
- SIGN
- DOUBLE VERTICAL PANEL
- CRYSTAL, BIDIRECTIONAL GUARDRAIL/BARRIER WALL REFLECTOR
- DRUM

N

0 20 40 60
SCALE IN FEET

MODEL: Default
FILE NAME: pw:\\ildot-pw.bentley.com:PWIDOT\Documents\IDOT Offices\District 8\Projects\0876K46\CADsheets\0876K46-sht-plan.dgn

| | | | |
|---|---|---|---|
| USER NAME = humphreysb | DESIGNED - | REVISED - | |
| | DRAWN - | REVISED - | |
| PLOT SCALE = 40.0000 ' / in. | CHECKED - | REVISED - | |
| PLOT DATE = 5/13/2022 | DATE - | REVISED - | |

**STATE OF ILLINOIS**
**DEPARTMENT OF TRANSPORTATION**

**STAGE 2 CONSTRUCTION**
**SN 003–0018**

SCALE: 1" = 20' | SHEET 2 OF 2 SHEETS | STA. TO STA.

| **F.A. RTE. | SECTION | COUNTY | TOTAL SHEETS | SHEET NO. |
|---|---|---|---|---|
| ** | (Q-1,X-1,F-1)RS-2, Q-1VBDR-1 | BOND | 113 | 48 |
| **FAU 9832, FAS 1751 | | CONTRACT NO. 76K46 | | |
| | ILLINOIS | FED. AID PROJECT | | |

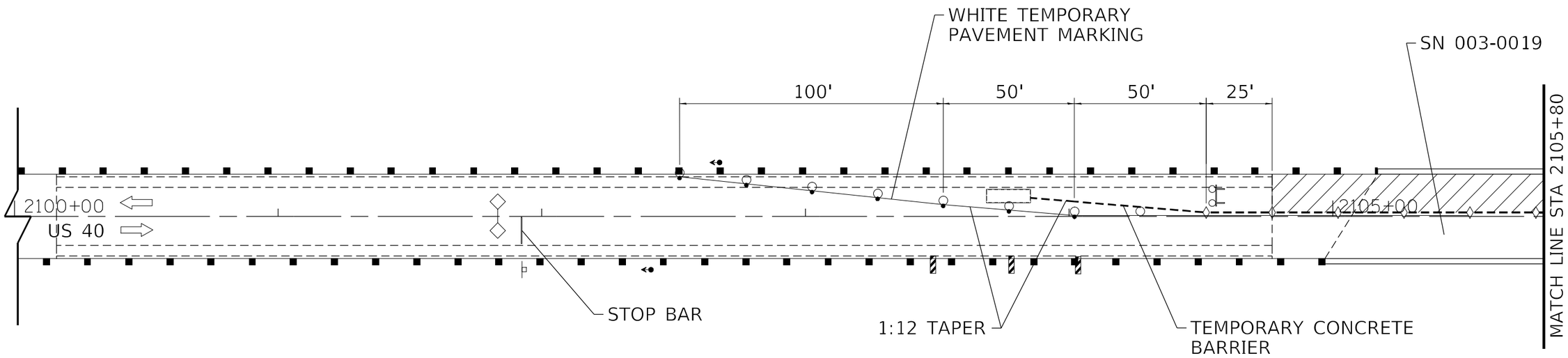


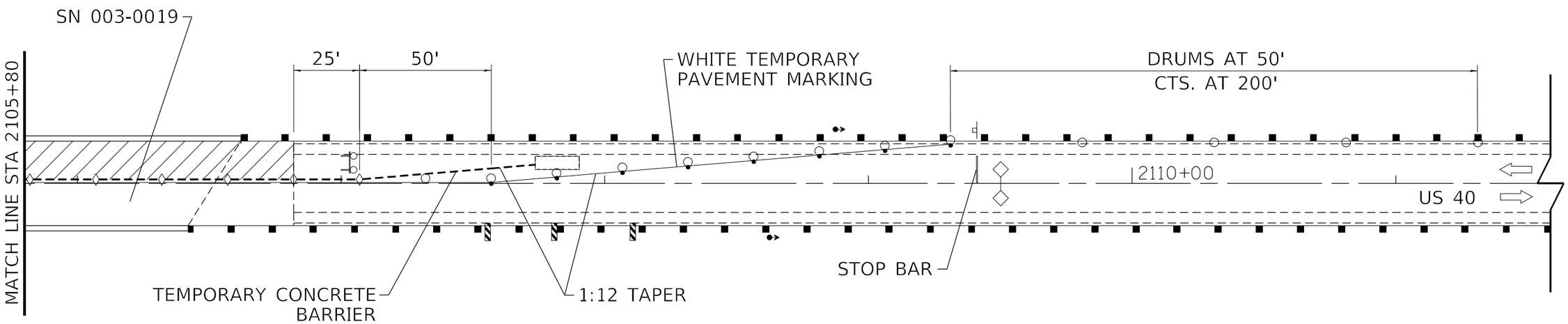


## LEGEND

- WORK AREA
- TEMPORARY CONCRETE BARRIER
- TYPE III BARRICADE WITH FLASHING LIGHTS
- IMPACT ATTENUATOR
- DRUM WITH STEADY BURNING BI-DIRECTIONAL LIGHT
- SIGN
- DOUBLE VERTICAL PANEL
- CRYSTAL, BIDIRECTIONAL GUARDRAIL/BARRIER WALL REFLECTOR
- DRUM

N

0 20 40 60
SCALE IN FEET

MODEL: Default
FILE NAME: pw://illdot-pw.bentley.com:PWIDOT\Documents\IDOT Offices\District 8\Projects\D876K46\CADData\CADsheets\D876K46-sht-plan.dgn

| | | | |
|---|---|---|---|
| USER NAME = humphreysb | DESIGNED - | REVISED - | |
| | DRAWN - | REVISED - | |
| PLOT SCALE = 40.0000 ' / in. | CHECKED - | REVISED - | |
| PLOT DATE = 5/13/2022 | DATE - | REVISED - | |

**STATE OF ILLINOIS**
**DEPARTMENT OF TRANSPORTATION**

**STAGE 1 CONSTRUCTION**
**SN 003–0019**

SCALE: 1" = 20' | SHEET 1 OF 2 SHEETS | STA. TO STA.

| **F.A. RTE. | SECTION | COUNTY | TOTAL SHEETS | SHEET NO. |
|---|---|---|---|---|
| ** | (Q-1,X-1,F-1)RS-2, Q-1VBDR-1 | BOND | 113 | 49 |
| **FAU 9832, FAS 1751 | | CONTRACT NO. 76K46 | | |
| | | ILLINOIS FED. AID PROJECT | | |

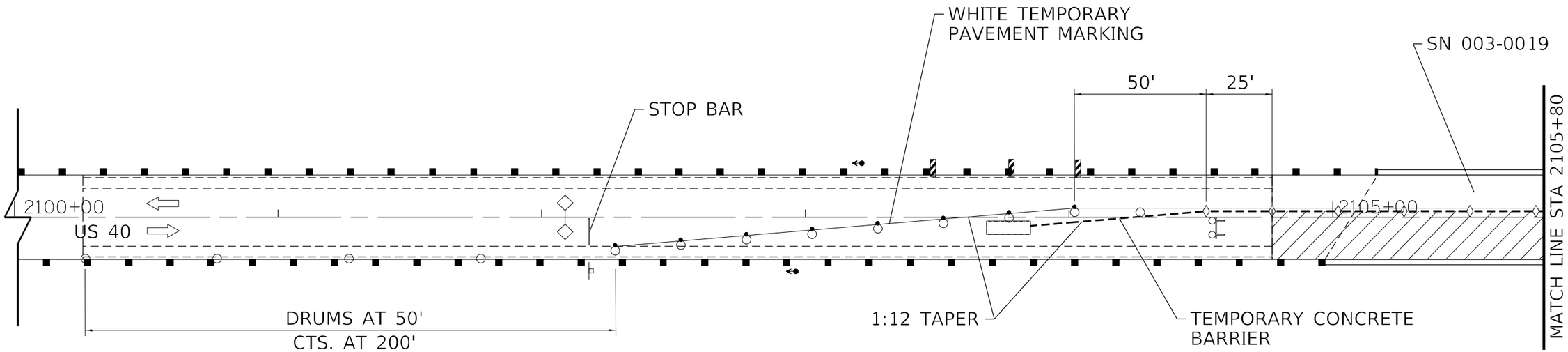


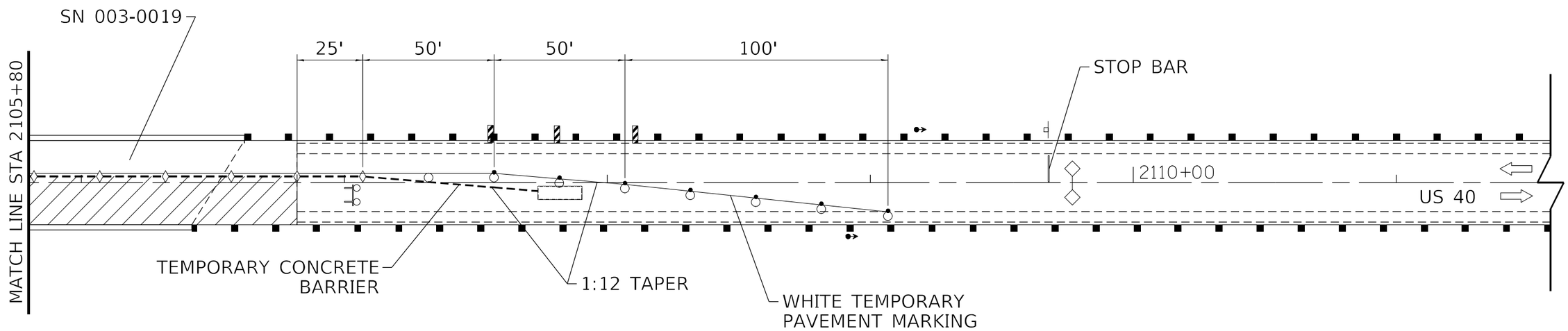


## LEGEND

- WORK AREA
- TEMPORARY CONCRETE BARRIER
- TYPE III BARRICADE WITH FLASHING LIGHTS
- IMPACT ATTENUATOR
- DRUM WITH STEADY BURNING BI-DIRECTIONAL LIGHT
- SIGN
- DOUBLE VERTICAL PANEL
- CRYSTAL, BIDIRECTIONAL GUARDRAIL/BARRIER WALL REFLECTOR
- DRUM

N

0 20 40 60
SCALE IN FEET

MODEL: Default
FILE NAME: pw:\\ildot-pw.bentley.com:PWIDOT\Documents\IDOT Offices\District 8\Projects\0876K46\CADData\CADsheets\0876K46-sht-bln.dgn

| | | | |
|---|---|---|---|
| USER NAME = humphreysb | DESIGNED - | REVISED - | |
| | DRAWN - | REVISED - | |
| PLOT SCALE = 40.0000 ' / in. | CHECKED - | REVISED - | |
| PLOT DATE = 5/13/2022 | DATE - | REVISED - | |

**STATE OF ILLINOIS**
**DEPARTMENT OF TRANSPORTATION**

**STAGE 2 CONSTRUCTION**
**SN 003-0019**

SCALE: 1" = 20' | SHEET 2 OF 2 SHEETS | STA. TO STA.

| **F.A. RTE. | SECTION | COUNTY | TOTAL SHEETS | SHEET NO. |
|---|---|---|---|---|
| ** | (Q-1,X-1,F-1)RS-2, Q-1VBDR-1 | BOND | 113 | 50 |
| **FAU 9832, FAS 1751 | | CONTRACT NO. 76K46 | | |
| | | ILLINOIS FED. AID PROJECT | | |

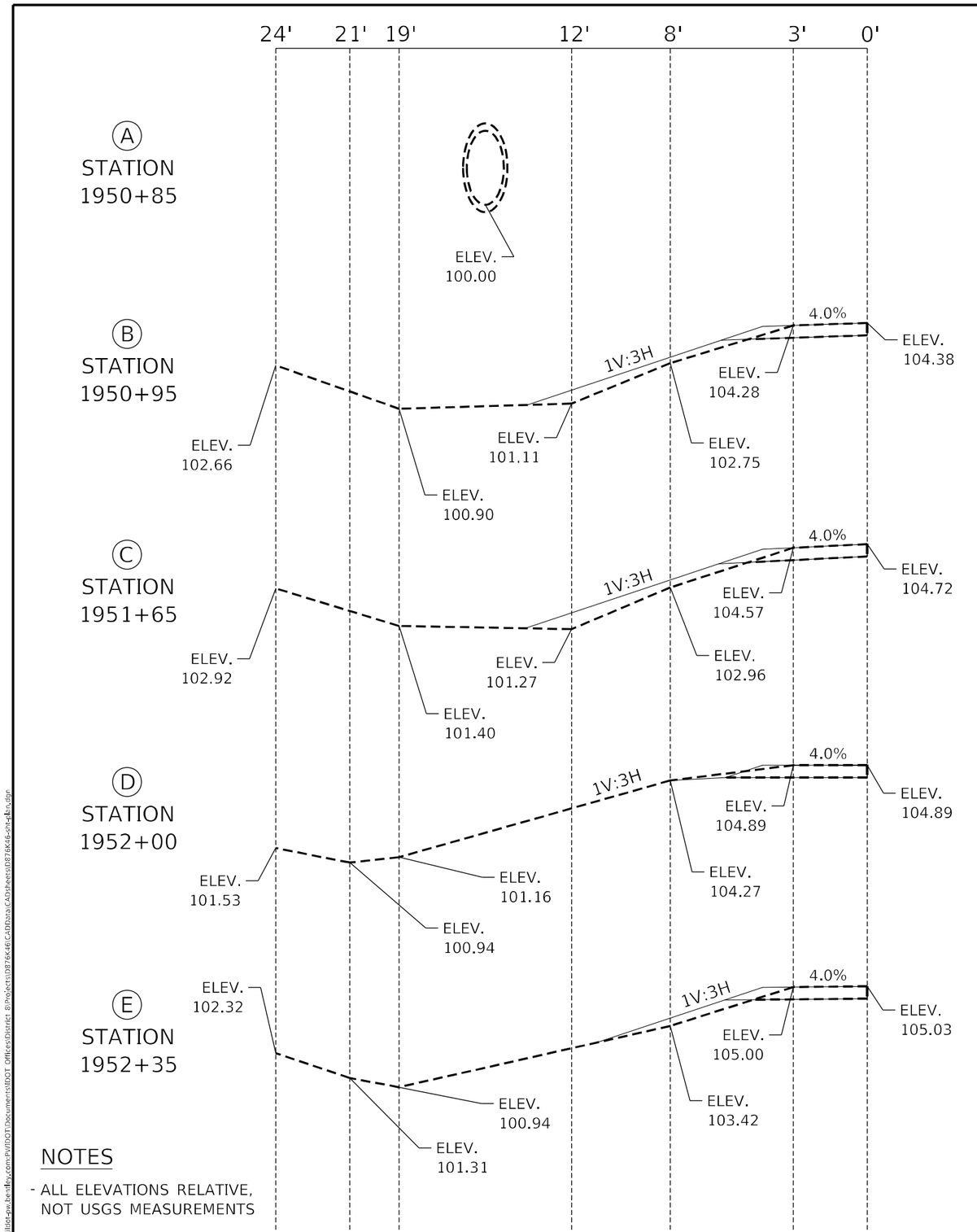


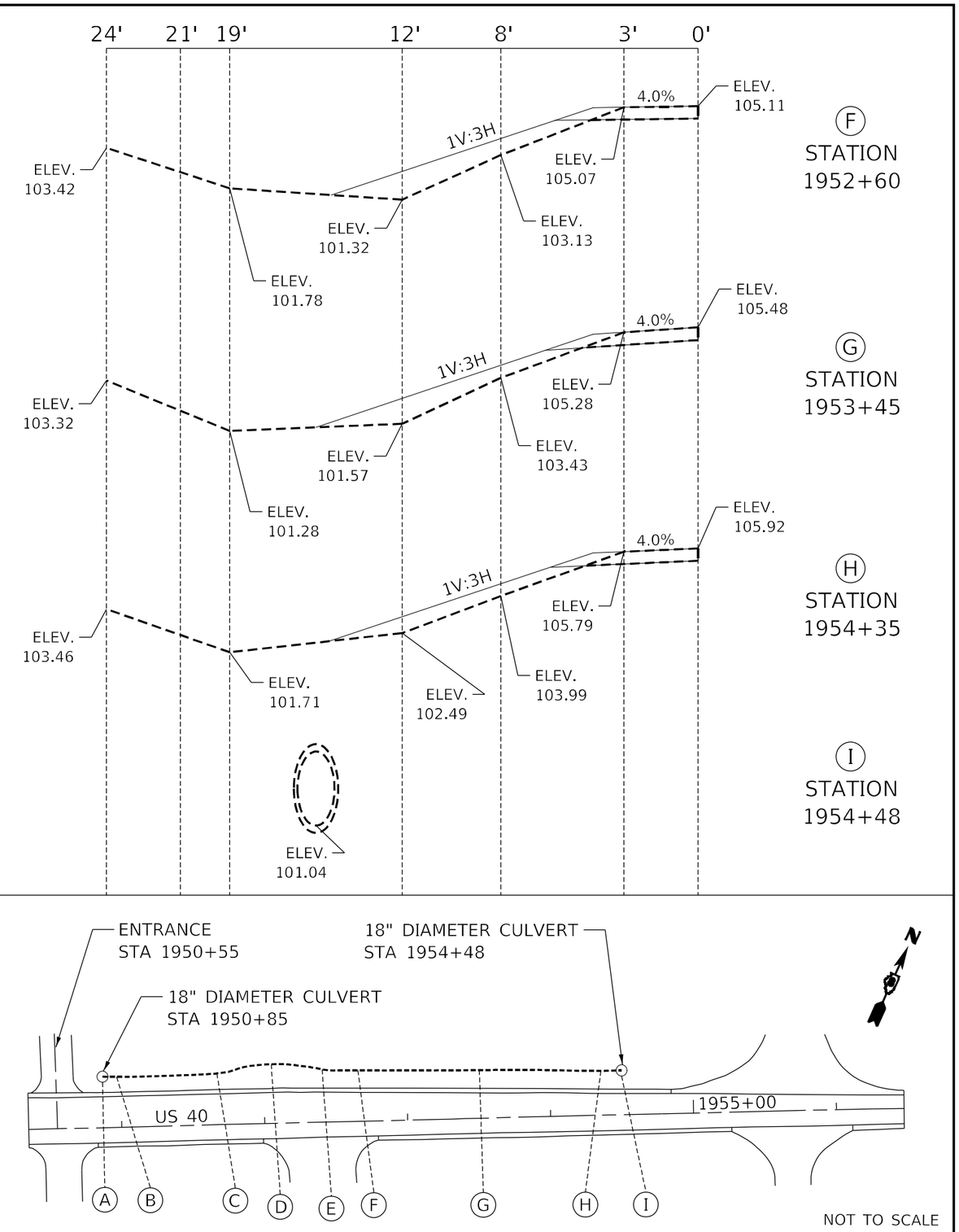





NOT TO SCALE

## NOTES

- ALL ELEVATIONS RELATIVE, NOT USGS MEASUREMENTS

| | | | |
|---|---|---|---|
| USER NAME = humphreysb | DESIGNED - | REVISED - | |
| | DRAWN - | REVISED - | |
| PLOT SCALE = 40.0000 ' / in. | CHECKED - | REVISED - | |
| PLOT DATE = 5/13/2022 | DATE - | REVISED - | |

**STATE OF ILLINOIS**
**DEPARTMENT OF TRANSPORTATION**

**DRAINAGE SHEET**
**STA 1950+85 TO STA 1954+48**

SCALE: NTS | SHEET 1 OF 1 SHEETS | STA. 1950+55 TO STA. 1954+48

| **F.A. RTE. | SECTION | COUNTY | TOTAL SHEETS | SHEET NO. |
|---|---|---|---|---|
| ** | (Q-1,X-1,F-1)RS-2, Q-1VBDR-1 | BOND | 113 | 51 |
| **FAU 9832, FAS 1751 | | CONTRACT NO. 76K46 | | |
| | | ILLINOIS FED. AID PROJECT | | |

MODEL: Default
FILE NAME: pw:\\ildot-pw.bentley.com:PWIDOT\Documents\IDOT Offices\District 8\Projects\0876K46\CADData\CADsheets\0876K46-sht-dsn.dgn

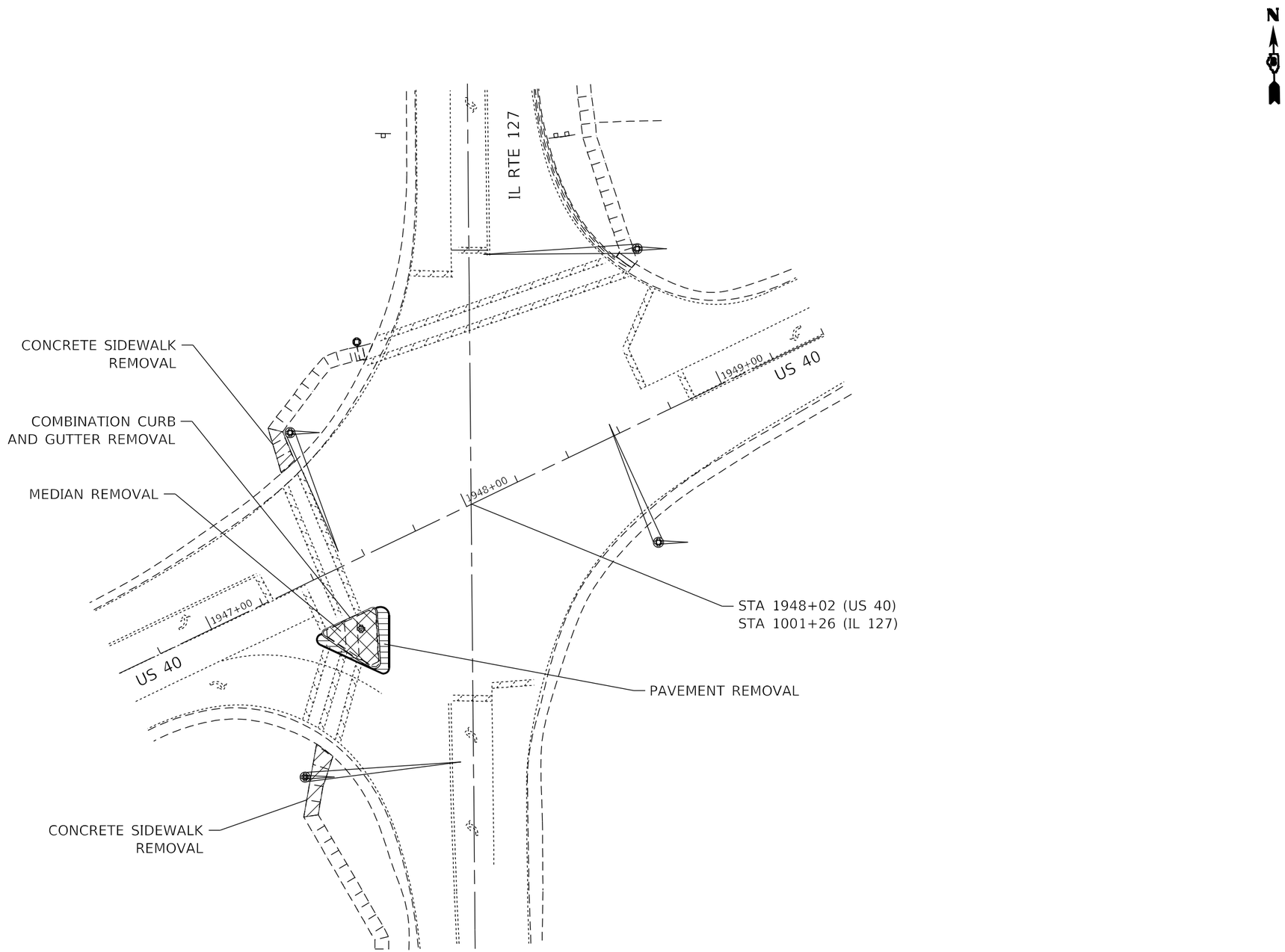


0 20 40 60
SCALE IN FEET

MODEL: Default
FILE NAME: pw:\\ildot-pw.bentley.com:PWIDOT\Documents\IDOT Offices\District 8\Projects\D876K46\CADData\CADsheets\D876K46-sht-plan.dgn

| | | | |
|---|---|---|---|
| USER NAME = humphreysb | DESIGNED - | REVISED - | |
| | DRAWN - | REVISED - | |
| PLOT SCALE = 40.0000 ' / in. | CHECKED - | REVISED - | |
| PLOT DATE = 5/13/2022 | DATE - | REVISED - | |

**STATE OF ILLINOIS**
**DEPARTMENT OF TRANSPORTATION**

**US 40 & IL 127 INTERSECTION**
**PROPOSED REMOVAL**

SCALE: 1" = 20' | SHEET 1 OF 2 SHEETS | STA. TO STA.

| **F.A. RTE. | SECTION | COUNTY | TOTAL SHEETS | SHEET NO. |
|---|---|---|---|---|
| ** | (Q-1,X-1,F-1)RS-2, Q-1VBDR-1 | BOND | 113 | 52 |
| **FAU 9832, FAS 1751 | | CONTRACT NO. 76K46 | | |
| | | ILLINOIS FED. AID PROJECT | | |

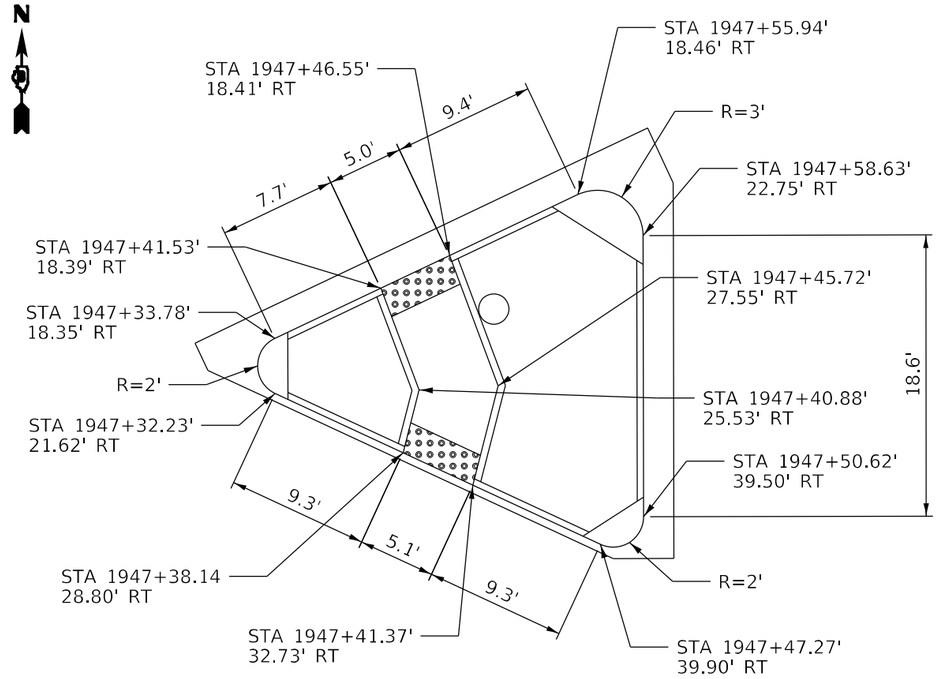


## SOUTHWEST QUADRANT ISLAND

0 5 10 15
SCALE IN FEET

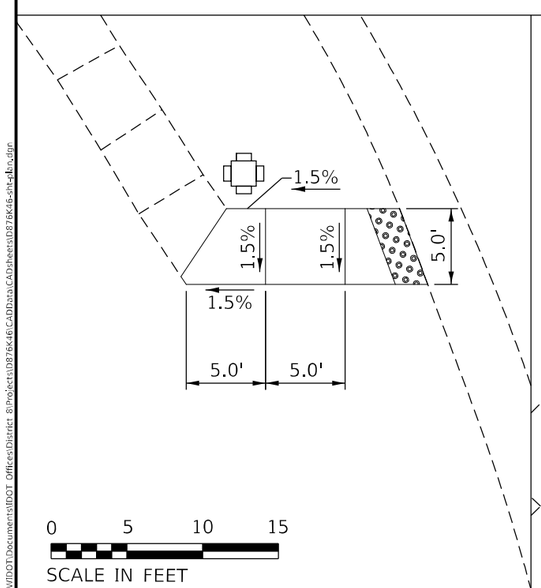


0 5 10 15
SCALE IN FEET

## NORTHWEST QUADRANT SIDEWALK

## SOUTHWEST QUADRANT SIDEWALK

0 5 10 15
SCALE IN FEET

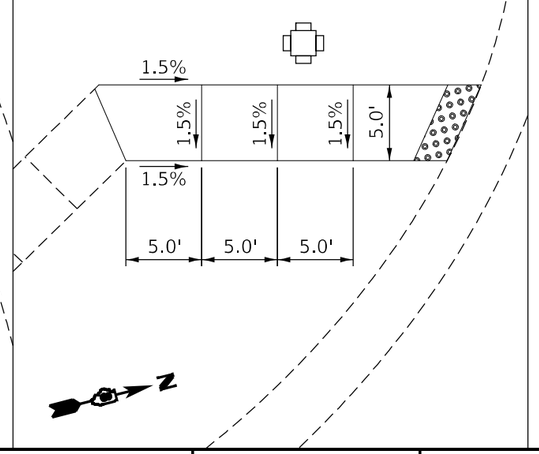


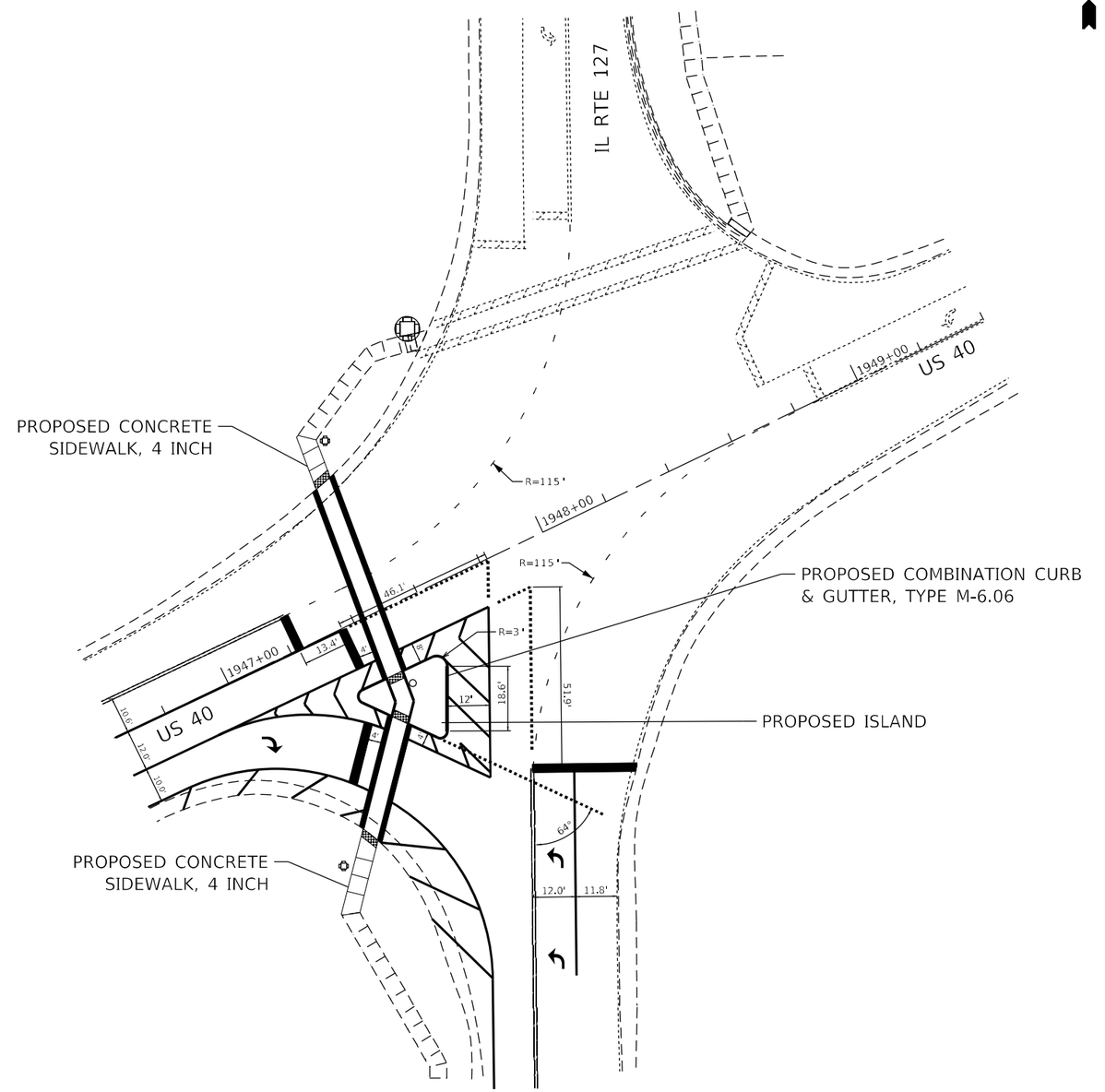


0 20 40 60
SCALE IN FEET

MODEL: Default
FILE NAME: pw:\\ildot-pw.bentley.com:PWIDOT\Documents\IDOT Offices\District 8\Projects\D876K46\CADData\CADsheets\D876K46-sht-plan.dgn

| | | | |
|---|---|---|---|
| USER NAME = humphreysb | DESIGNED - | REVISED - | |
| | DRAWN - | REVISED - | |
| PLOT SCALE = 40.0000 ' / in. | CHECKED - | REVISED - | |
| PLOT DATE = 5/13/2022 | DATE - | REVISED - | |

**STATE OF ILLINOIS**
**DEPARTMENT OF TRANSPORTATION**

**US 40 & IL 127 INTERSECTION**
**PROPOSED RECONSTRUCTION**

SCALE: VARIES | SHEET 2 OF 2 SHEETS | STA. TO STA.

| **F.A. RTE. | SECTION | COUNTY | TOTAL SHEETS | SHEET NO. |
|---|---|---|---|---|
| ** | (Q-1,X-1,F-1)RS-2, Q-1VBDR-1 | BOND | 113 | 53 |
| **FAU 9832, FAS 1751 | | CONTRACT NO. 76K46 | | |
| | | ILLINOIS FED. AID PROJECT | | |

## INTERSECTION IMPROVEMENTS
## INDEX OF SHEETS



## INTERSECTION IMPROVEMENTS
## GENERAL NOTES

1. THE CONTRACTOR SHALL VERIFY ALL DIMENSIONS AND CONDITION IN THE FIELD PRIOR TO CONSTRUCTION AND ORDERING OF MATERIALS.
2. THE CONTRACTOR SHALL PROVIDE POSITIVE AND ADEQUATE DRAINAGE AT ALL TIMES.
3. ALL ELEVATIONS REFER TO THE NAVD 88 DATUM.

## HIGHWAY STANDARDS

| | |
|---|---|
| 000001-08 | STANDARD SYMBOLS, ABBREVIATIONS AND PATTERS |
| 001006 | DECIMAL OF AN INCH AND OF A FOOT |
| 280001-07 | TEMPORARY EROSION CONTROL SYSTEMS |
| 701001-02 | OFF-RD OPERATIONS, 2L, 2W, MORE THAN 15' AWAY |
| 701006-05 | OFF-RD OPERATIONS, 2L, 2W, 15' TO 24" FROM PAVEMENT EDGE |
| 701201-05 | LANE CLOSURE, 2L, 2W, DAY ONLY, FOR SPEEDS ≥ 45 MPH |
| 701901-08 | TRAFFIC CONTROL DEVICES |
| 720006-04 | SIGN PANEL ERECTION DETAILS |
| 728001-01 | TELESCOPING STEEL SIGN SUPPORTS |

LICENSED PROFESSIONAL ENGINEER
DREW S. RUHOLL
062-070688
OF ILLINOIS

05/12/2022
EXPIRES 11-30-2023

BENTON & ASSOCIATES INC

BILL OF MATERIALS

| CODE NO. | ITEM | UNIT | MAPLE ST. INTERSECTION IMPROVEMENTS QUANTITIES |
|---|---|---|---|
| 20200100 | EARTH EXCAVATION | CU YD | 195 |
| 25000210 | SEEDING, CLASS 2A | ACRE | 0.5 |
| 25000400 | NITROGEN FERTILIZER NUTRIENT | POUND | 41 |
| 25000500 | PHOSPHORUS FERTILIZER NUTRIENT | POUND | 41 |
| 25000600 | POTASSIUM FERTILIZER NUTRIENT | POUND | 41 |
| 25100115 | MULCH, METHOD 2 | ACRE | 0.5 |
| 28000250 | TEMPORARY EROSION CONTROL SEEDING | POUND | 133 |
| 28000305 | TEMPORARY DITCH CHECKS | FOOT | 15 |
| 28000400 | PERIMETER EROSION BARRIER | FOOT | 592 |
| 28000500 | INLET AND PIPE PROTECTION | EACH | 2 |
| 31101900 | SUBBASE GRANULAR MATERIAL, TYPE C | TON | 108 |
| 35400400 | PORTLAND CEMENT CONCRETE BASE COURSE WIDENING 9" | SQ YD | 40 |
| 40600290 | BITUMINOUS MATERIALS (TACK COAT) | POUND | 1327 |
| 40600370 | LONGITUDINAL JOINT SEALANT | FOOT | 545 |
| 40600982 | HOT-MIX ASPHALT SURFACE REMOVAL - BUTT JOINT | SQ YD | 33 |
| 40600990 | TEMPORARY RAMP | SQ YD | 114 |
| 40603085 | HOT-MIX ASPHALT BINDER COURSE, IL-19.0, N70 | TON | 255 |
| 40604052 | HOT-MIX ASPHALT SURFACE COURSE, IL-9.5, MIX "C", N70 | TON | 164 |
| 44000100 | PAVEMENT REMOVAL | SQ YD | 149 |
| 44000164 | HOT-MIX ASPHALT SURFACE REMOVAL, 3 3/4" | SQ YD | 1661 |
| 44000500 | COMBINATION CURB AND GUTTER REMOVAL | FOOT | 671 |
| 48102100 | AGGREGATE WEDGE SHOULDER, TYPE B | TON | 43 |
| 48203029 | HOT-MIX ASPHALT SHOULDERS, 8" | SQ YD | 378 |
| 50105220 | PIPE CULVERT REMOVAL | FOOT | 82 |
| 60500060 | REMOVING INLETS | EACH | 3 |
| 70103815 | TRAFFIC CONTROL SURVEILLANCE | CAL DA | 5 |
| 70300211 | TEMPORARY PAVEMENT MARKING LETTERS AND SYMBOLS - PAINT | SQ FT | 42 |
| 70300221 | TEMPORARY PAVEMENT MARKING - LINE 4" - PAINT | FOOT | 1006 |
| 70300251 | TEMPORARY PAVEMENT MARKING - LINE 8" - PAINT | FOOT | 322 |
| 70300261 | TEMPORARY PAVEMENT MARKING - LINE 12" - PAINT | FOOT | 69 |
| 70300281 | TEMPORARY PAVEMENT MARKING - LINE 24" - PAINT | FOOT | 101 |
| 72000100 | SIGN PANEL - TYPE 1 | SQ FT | 82 |
| 72400100 | REMOVE SIGN PANEL ASSEMBLY - TYPE A | EACH | 6 |
| 72400200 | REMOVE SIGN PANEL ASSEMBLY - TYPE B | EACH | 2 |
| 72800100 | TELESCOPING STEEL SIGN SUPPORT | FOOT | 13 |
| 73000100 | WOOD SIGN SUPPORT | FOOT | 145 |
| 78000100 | THERMOPLASTIC PAVEMENT MARKING - LETTERS AND SYMBOLS | SQ FT | 42 |
| 78000200 | THERMOPLASTIC PAVEMENT MARKING - LINE 4" | FOOT | 1006 |
| 78000500 | THERMOPLASTIC PAVEMENT MARKING - LINE 8" | FOOT | 322 |
| 78000600 | THERMOPLASTIC PAVEMENT MARKING - LINE 12" | FOOT | 69 |
| 78000650 | THERMOPLASTIC PAVEMENT MARKING - LINE 24" | FOOT | 101 |
| 78300202 | PAVEMENT MARKING REMOVAL - WATER BLASTING | SQ FT | 862 |
| X4403700 | MEDIAN REMOVAL (SPECIAL) | SQ FT | 356 |
| Z0013798 | CONSTRUCTION LAYOUT | L SUM | 0.4 |
| Z0042200 | PORTLAND CEMENT CONCRETE PAVEMENT SURFACE REMOVAL | SQ YD | 252 |

REV. - MS

MODEL: Default
FILE NAME: P:\9832340-67\76K46\Section 78R-1\CADD Sheets\76K46-sht-gennote.dgn


BENTON & ASSOCIATES, INC.
CONSULTING ENGINEERS / LAND SURVEYORS
1970 WEST LAFAYETTE AVE.
JACKSONVILLE, IL 62650
PHONE: 217-245-4146 FAX: 217-245-4149
IL DESIGN FIRM REGISTRATION NO. 184-000852


| | | | |
|---|---|---|---|
| USER NAME = druholl | DESIGNED - DSR | REVISED - | |
| | DRAWN - DSR | REVISED - | |
| PLOT SCALE = 100.0000 ' / in. | CHECKED - WJS | REVISED - | |
| PLOT DATE = 5/12/2022 | DATE - 03-16-2022 | REVISED - | |

STATE OF ILLINOIS
DEPARTMENT OF TRANSPORTATION

INTERSECTION IMPROVEMENTS BILL OF MATERIALS AND NOTES
FAU 9832/FAS 1751 (US 40)

SCALE: | SHEET 1 OF 18 SHEETS | STA. TO STA.

| F.A.U. RTE. | SECTION | COUNTY | TOTAL SHEETS | SHEET NO. |
|---|---|---|---|---|
| * | (Q-1,X-1,F-1)RS-2,Q-1VBDR-1 | BOND | 108 | 54 |
| * F.A.U. 9832/ F.A.S. 1751 | | CONTRACT NO. 76K46 | | |
| | | ILLINOIS | FED. AID PROJECT | |

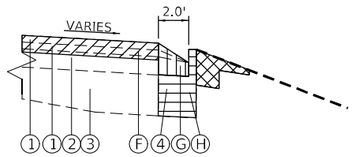


**EXISTING TYPICAL SECTION**
**US 40/MAPLE LN INTERSECTION**
(NOT TO SCALE)

NE QUADRANT
NW QUADRANT
SE QUADRANT

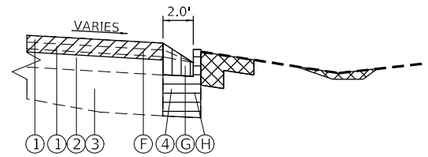


**EXISTING TYPICAL SECTION**
**US 40/MAPLE LN INTERSECTION**
(NOT TO SCALE)

SW QUADRANT

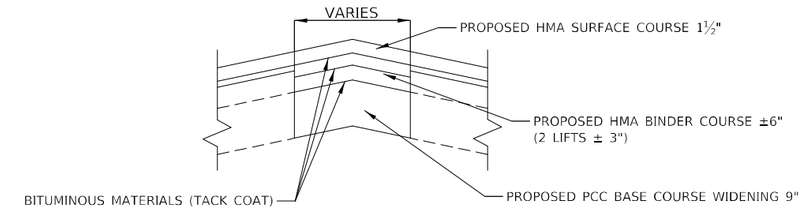


**PROPOSED MEDIAN DETAIL**
**US 40/MAPLE LN INTERSECTION**
(NOT TO SCALE)

SE QUADRANT

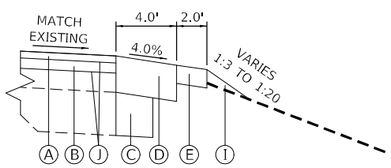


**PROPOSED TYPICAL SECTION**
**US 40/MAPLE LN INTERSECTION**
(NOT TO SCALE)

NE QUADRANT
NW QUADRANT
SE QUADRANT

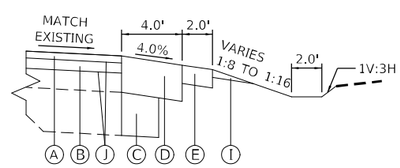


**PROPOSED TYPICAL SECTION**
**US 40/MAPLE LN INTERSECTION**
(NOT TO SCALE)

SW QUADRANT

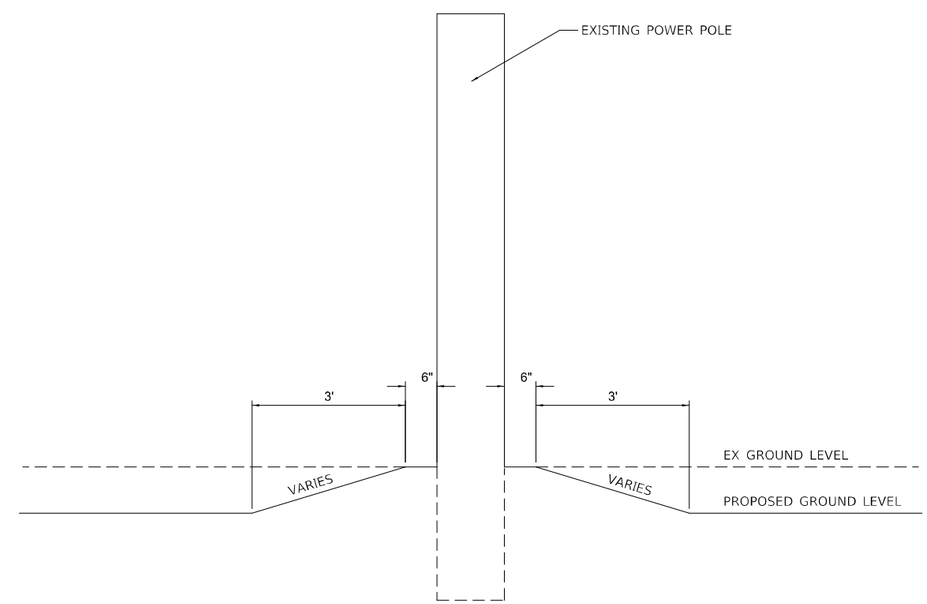


**GRADING NEAR EXISTING POWER POLES**

(NOT TO SCALE)
NW, SE, & SW QUADRANTS

## LEGEND

1. EXISTING BITUMINOUS SURFACE COURSE, 1½"
2. EXISTING BITUMINOUS SURFACE COURSE, 4"
3. EXISTING PCC PAVEMENT, 9"-7"-9"
4. EXISTING PARTIAL REMAINING CONCRETE CURB AND GUTTER

A. PROPOSED HOT-MIX ASPHALT SURFACE COURSE, 1½"
B. PROPOSED HOT-MIX ASPHALT BINDER COURSE, 2¼"
C. PROPOSED GRANULAR MATERIAL, TYPE C
D. PROPOSED HOT-MIX ASPHALT SHOULDER, 8"
E. PROPOSED AGGREGATE WEDGE SHOULDER, TYPE B
F. PROPOSED HOT-MIX ASPHALT SURFACE REMOVAL, 3¾"
G. PROPOSED PAVEMENT REMOVAL
H. PROPOSED COMBINATION CURB AND GUTTER REMOVAL
I. PROPOSED EMBANKMENT
J. PROPOSED BITUMINOUS MATERIALS (TACK COAT)

HMA SURFACE COURSE REMOVAL

PAVEMENT REMOVAL

CURB & GUTTER/ GUTTER REMOVAL

EARTH EXCAVATION



BENTON & ASSOCIATES, INC.
CONSULTING ENGINEERS / LAND SURVEYORS
1970 WEST LAFAYETTE AVE.
JACKSONVILLE, IL 62650
PHONE: 217-245-4146 FAX: 217-245-4149
IL DESIGN FIRM REGISTRATION NO. 184-000852

| | | | |
|---|---|---|---|
| USER NAME = Brandon.Humphreys | DESIGNED - DSR | REVISED - | |
| | DRAWN - DSR | REVISED - | |
| PLOT SCALE = 100.0000 ' / in. | CHECKED - WJS | REVISED - | |
| PLOT DATE = 9/7/2022 | DATE - 03-16-2022 | REVISED - | |

**STATE OF ILLINOIS**
**DEPARTMENT OF TRANSPORTATION**

**PAVEMENT DETAILS**
**(MAPLE ST. & US 40)**

SCALE: | SHEET 2 OF 18 SHEETS | STA. | TO STA.

| F.A.U. RTE. | SECTION | COUNTY | TOTAL SHEETS | SHEET NO. |
|---|---|---|---|---|
| * | (Q-1,X-1,F-1)RS-2,Q-1VBDR-1 | BOND | 108 | 55 |
| * F.A.U. 9832/ F.A.S. 1751 | | CONTRACT NO. 76K46 | | |
| | | ILLINOIS | FED. AID PROJECT | |

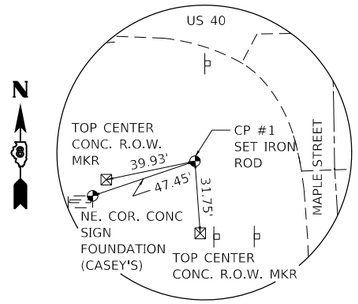


CONTROL POINT #1
SET 5/8" IRON ROD

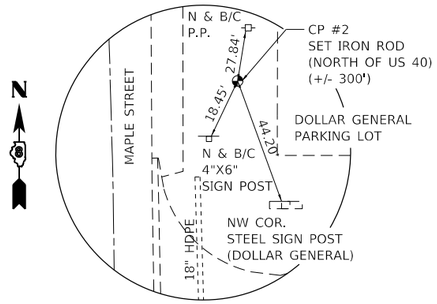


CONTROL POINT #2
SET 5/8" IRON ROD

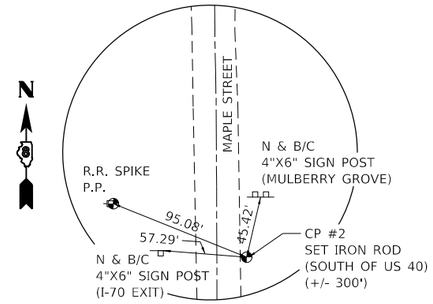


CONTROL POINT #3
SET 5/8" IRON ROD

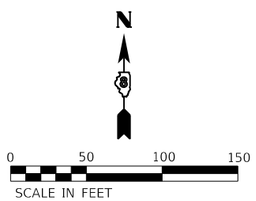


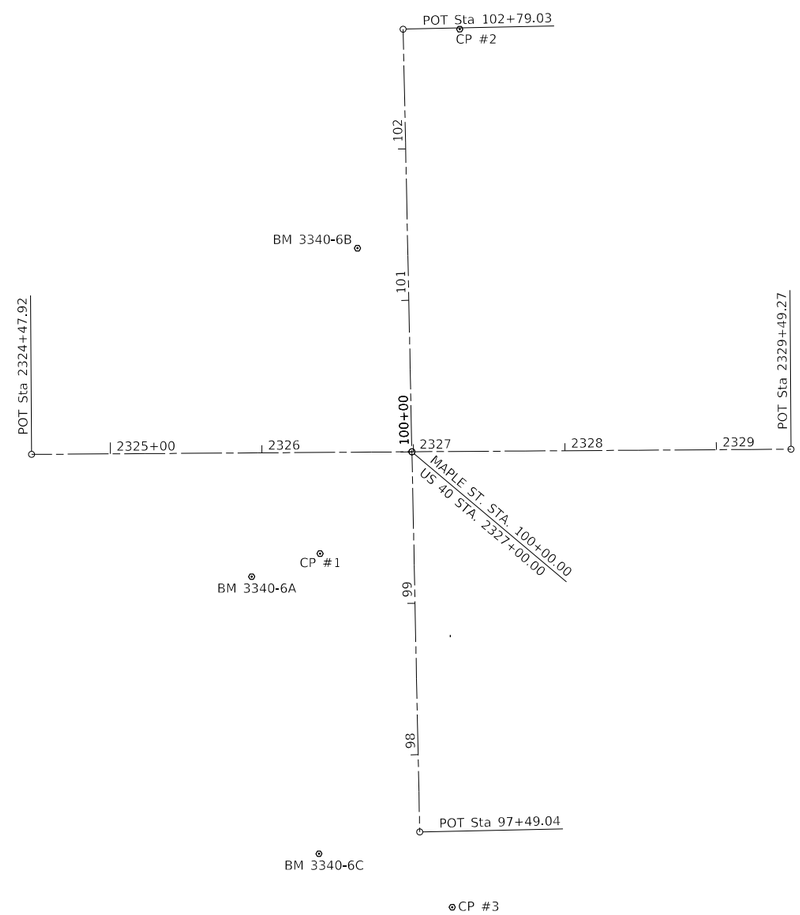


BM #3340-6A
CHISELED "□" TOP NORTHEAST CONER OF CONCRETE SIGN FOUNDATION FOR "CASEY'S" AT THE SOUTHWEST CORNER OF U.S. 40 AND MAPLE STREET.
ELEV= 562.96

BM #3340-6B
"M" IN "MUELLER" TOP FLANGE OF FIRE HYDRANT ON THE WEST SIDE OF MAPLE STREET AND 140 FEET +/- NORTH OF THE CENTERLINE OF U.S. 4O.
ELEV= 562.75

BM #3340-6C
RAILROAD SPIKE IN POWER POLE ON THE WEST SIDE OF MAPLE STREET AND 270 FEET +/- SOUTH OF U.S. 40.
ELEV= 562.66

| POINT | STATION | NORTHING | EASTING |
|---|---|---|---|
| P.O.T. | 97+49.04 | 820957.544 | 2552008.226 |
| P.O.T. | 102+79.03 | 821487.417 | 2551997.302 |
| P.O.T. | 2324+47.92 | 821206.720 | 2551751.984 |
| P.O.T. | 2329+49.27 | 821209.995 | 2552253.323 |
| | 100+00.00 | 821208.451 | 2552003.053 |
| | 2326+99.17 | | |

MODEL: Default
FILE NAME: P:\19E3340-6\76K46 (Section 78R-1)\CADD Sheets\76K46-sht-ATB-Revised 7-25-2022.dgn

BENTON & ASSOCIATES, INC.
CONSULTING ENGINEERS / LAND SURVEYORS
1970 WEST LAFAYETTE AVE.
JACKSONVILLE, IL 62650
PHONE: 217-245-6146 FAX: 217-245-6149
IL DESIGN FIRM REGISTRATION NO. 184-000852

| | | | |
|---|---|---|---|
| USER NAME = druholl | DESIGNED - DSR | REVISED - 07-25-2022 | |
| | DRAWN - DSR | REVISED - _____ | |
| PLOT SCALE = 100.0000 ' / in. | CHECKED - WJS | REVISED - _____ | |
| PLOT DATE = 7/25/2022 | DATE - 03-16-2022 | REVISED - _____ | |

**STATE OF ILLINOIS**
**DEPARTMENT OF TRANSPORTATION**

**ALIGNMENT, TIES, AND BENCHMARKS**
**(MAPLE ST. & US 40)**

SCALE: _____ SHEET 3 OF 18 SHEETS STA. _____ TO STA. _____

| F.A.U. RTE. | SECTION | COUNTY | TOTAL SHEETS | SHEET NO. |
|---|---|---|---|---|
| * | (Q-1,X-1,F-1)RS-2,Q-1VBDR-1 | BOND | 108 | 56 |
| * F.A.U. 9832/ F.A.S. 1751 | | CONTRACT NO. 76K46 | | |
| | | ILLINOIS | FED. AID PROJECT | |

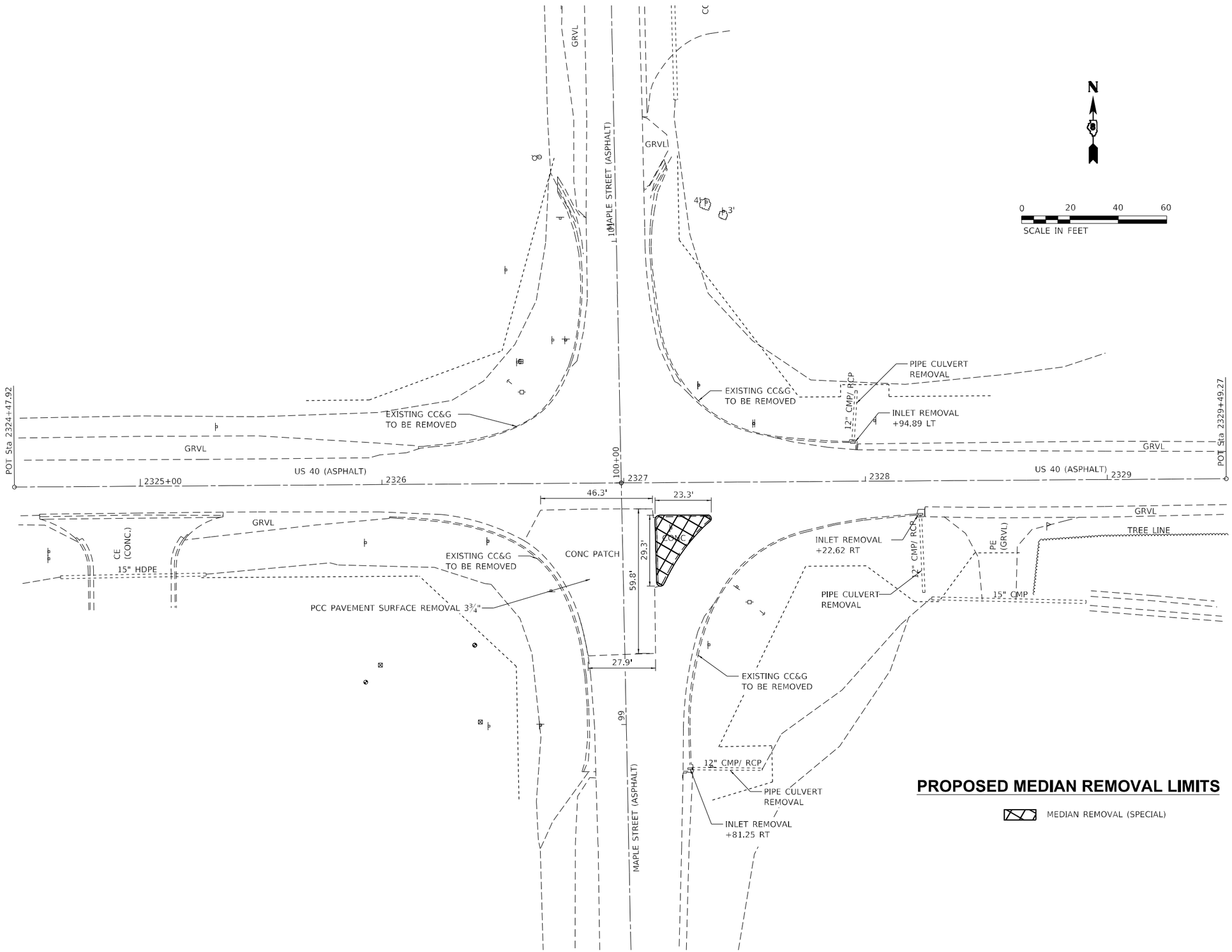


MODEL: Default
FILE NAME: P:\19F3340-6\76K46 (Section 7BR-1)\CADD Sheets\76K46-0H-removal.dgn

BENTON & ASSOCIATES, INC.
CONSULTING ENGINEERS / LAND SURVEYORS
1910 WEST LAFAYETTE AVE.
JACKSONVILLE, IL 62650
PHONE: 217-245-4146 FAX: 217-245-4149
IL DESIGN FIRM REGISTRATION NO. 184-000852

| | | | |
|---|---|---|---|
| USER NAME = druholl | DESIGNED - DSR | REVISED - | |
| | DRAWN - DSR | REVISED - | |
| PLOT SCALE = 40.0000 ' / in. | CHECKED - WJS | REVISED - | |
| PLOT DATE = 5/12/2022 | DATE - 03-16-2022 | REVISED - | |

**STATE OF ILLINOIS**
**DEPARTMENT OF TRANSPORTATION**

**REMOVAL DETAILS**
**(MAPLE ST. & US 40)**

SCALE: | SHEET 4 OF 18 SHEETS | STA. | TO STA.

| F.A.U. RTE. | SECTION | COUNTY | TOTAL SHEETS | SHEET NO. |
|---|---|---|---|---|
| * | (Q-1,X-1,F-1)RS-2,Q-1VBDR-1 | BOND | 108 | 57 |
| * F.A.U. 9832/ F.A.S. 1751 | | CONTRACT NO. 76K46 | | |
| | | ILLINOIS | FED. AID PROJECT | |

| NW QUADRANT | |
|---|---|
| LOCATION | GRADING TRANSITIONS (V:H) |
| STA. | FRONT SLOPE |
| 0+00.00 | 1:4 |
| 0+35.00 | 1:20 |
| 1+10.00 | 1:20 |
| 1+60.00 | 1:10 |
| 1+87.13 | 1:10 |

| NE QUADRANT | |
|---|---|
| LOCATION | GRADING TRANSITIONS (V:H) |
| STA. | FRONT SLOPE |
| 0+00.00 | 1:3 |
| 0+42.00 | 1:3 |
| 0+95.00 | 1:10 |
| 1+80.00 | 1:10 |
| 1+95.00 | 1:20 |
| 2+15.00 | 1:20 |
| 2+34.98 | 1:4 |

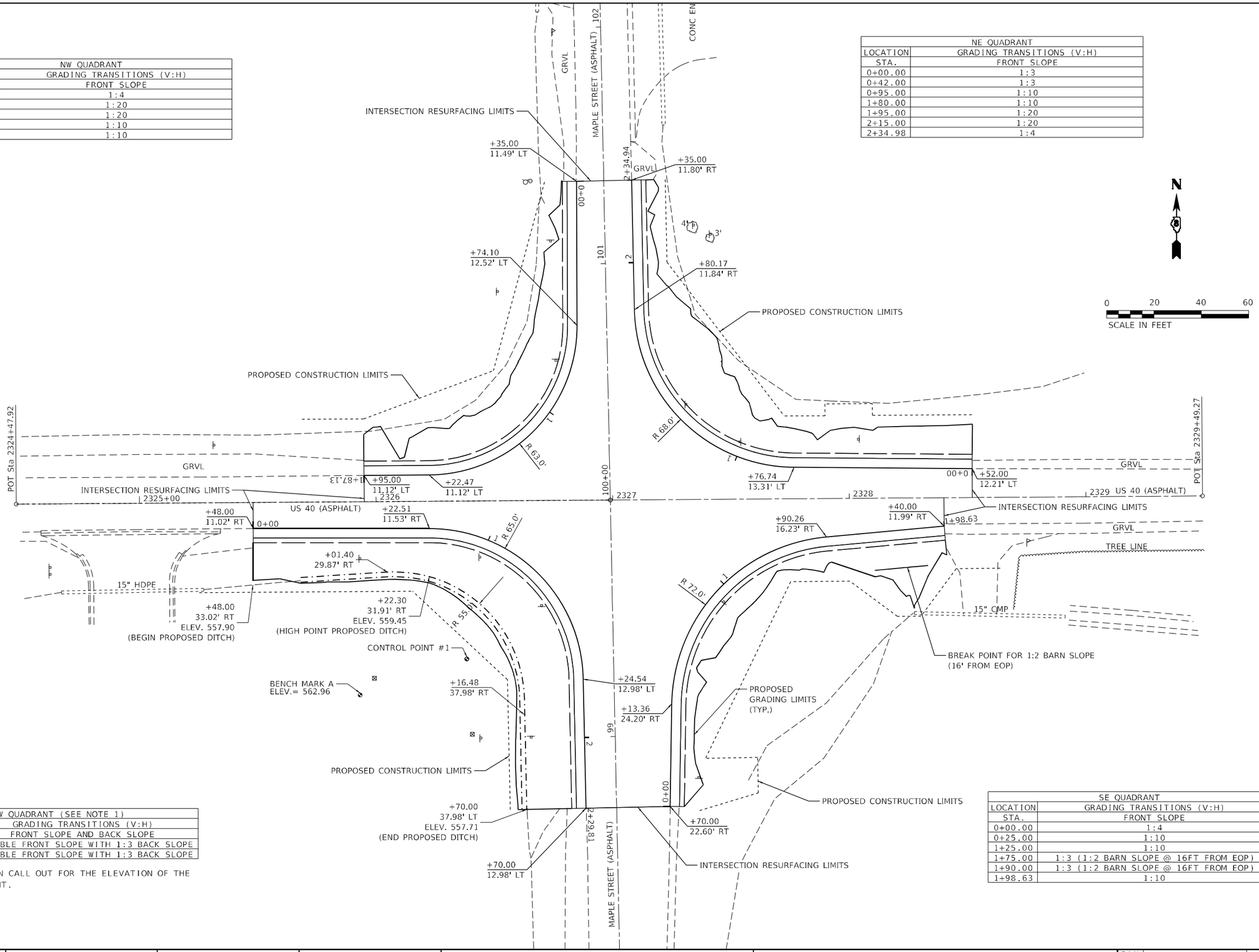


| SW QUADRANT (SEE NOTE 1) | |
|---|---|
| LOCATION | GRADING TRANSITIONS (V:H) |
| STA. | FRONT SLOPE AND BACK SLOPE |
| 0+00.00 | VARIABLE FRONT SLOPE WITH 1:3 BACK SLOPE |
| 2+29.81 | VARIABLE FRONT SLOPE WITH 1:3 BACK SLOPE |

NOTE 1: SEE PLAN CALL OUT FOR THE ELEVATION OF THE DITCH HIGH POINT.

| SE QUADRANT | |
|---|---|
| LOCATION | GRADING TRANSITIONS (V:H) |
| STA. | FRONT SLOPE |
| 0+00.00 | 1:4 |
| 0+25.00 | 1:10 |
| 1+25.00 | 1:10 |
| 1+75.00 | 1:3 (1:2 BARN SLOPE @ 16FT FROM EOP) |
| 1+90.00 | 1:3 (1:2 BARN SLOPE @ 16FT FROM EOP) |
| 1+98.63 | 1:10 |

MODEL: Default
FILE NAME: P:\9F3340-676K46 (Section 78P-1)\CADD Sheets\76K46-ohl-pll.dgn

BENTON & ASSOCIATES, INC.
CONSULTING ENGINEERS / LAND SURVEYORS
1970 WEST LAFAYETTE AVE.
JACKSONVILLE, IL 62650
PHONE: 217-245-4148 FAX: 217-245-4149
IL DESIGN FIRM REGISTRATION NO. 184-000852

| | | | |
|---|---|---|---|
| USER NAME = druhell | DESIGNED - DSR | REVISED - | |
| | DRAWN - DSR | REVISED - | |
| PLOT SCALE = 40.0000 ' / in. | CHECKED - WJS | REVISED - | |
| PLOT DATE = 5/12/2022 | DATE - 03-16-2022 | REVISED - | |

**STATE OF ILLINOIS**
**DEPARTMENT OF TRANSPORTATION**

**INTERSECTION IMPROVEMENT PLAN**
**(MAPLE ST. & US 40)**

SCALE: | SHEET 5 OF 18 SHEETS | STA. TO STA.

| F.A.U. RTE. | SECTION | COUNTY | TOTAL SHEETS | SHEET NO. |
|---|---|---|---|---|
| * | (Q-1, X-1, F-1)RS-2,Q-1VBDR-1 | BOND | 108 | 58 |
| ~ F.A.U. 9832/ F.A.S. 1751 | | CONTRACT NO. 76K46 | | |
| | | ILLINOIS | FED. AID PROJECT | |

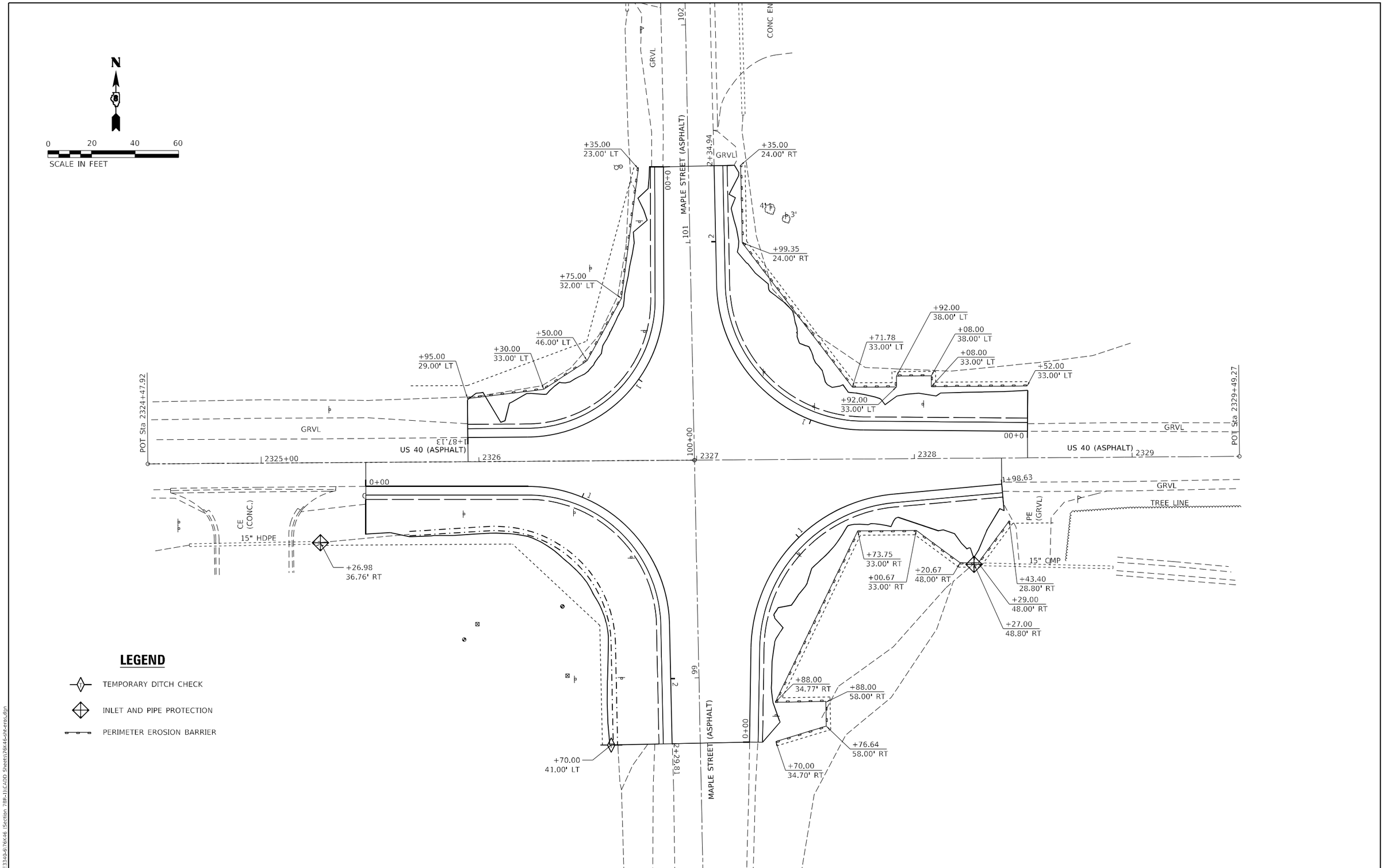


MODEL: Default
FILE NAME: P:\19E3340-76K46 (Section 78R-1)\CADD Sheets\78K46-sht-eros.dgn

BENTON & ASSOCIATES, INC.
CONSULTING ENGINEERS / LAND SURVEYORS
1970 WEST LAFAYETTE AVE.
JACKSONVILLE, IL 62650
PHONE: 217-243-8140 FAX: 217-243-8149
IL DESIGN FIRM REGISTRATION NO. 184-000852

| | | | |
|---|---|---|---|
| USER NAME = druholl | DESIGNED - DSR | REVISED - | |
| | DRAWN - DSR | REVISED - | |
| PLOT SCALE = 40.0000 ' / in. | CHECKED - WJS | REVISED - | |
| PLOT DATE = 5/12/2022 | DATE - 03-16-2022 | REVISED - | |

**STATE OF ILLINOIS**
**DEPARTMENT OF TRANSPORTATION**

**EROSION CONTROL DETAILS**
**(MAPLE ST. & US 40)**

SCALE: | SHEET 6 OF 18 SHEETS | STA. | TO STA.

| F.A.U. RTE. | SECTION | COUNTY | TOTAL SHEETS | SHEET NO. |
|---|---|---|---|---|
| * | (Q-1, X-1, F-1)RS-2,Q-1VBDR-1 | BOND | 108 | 59 |
| * F.A.U. 9832/ F.A.S. 1751 | | CONTRACT NO. 76K46 | | |
| | ILLINOIS | FED. AID PROJECT | | |

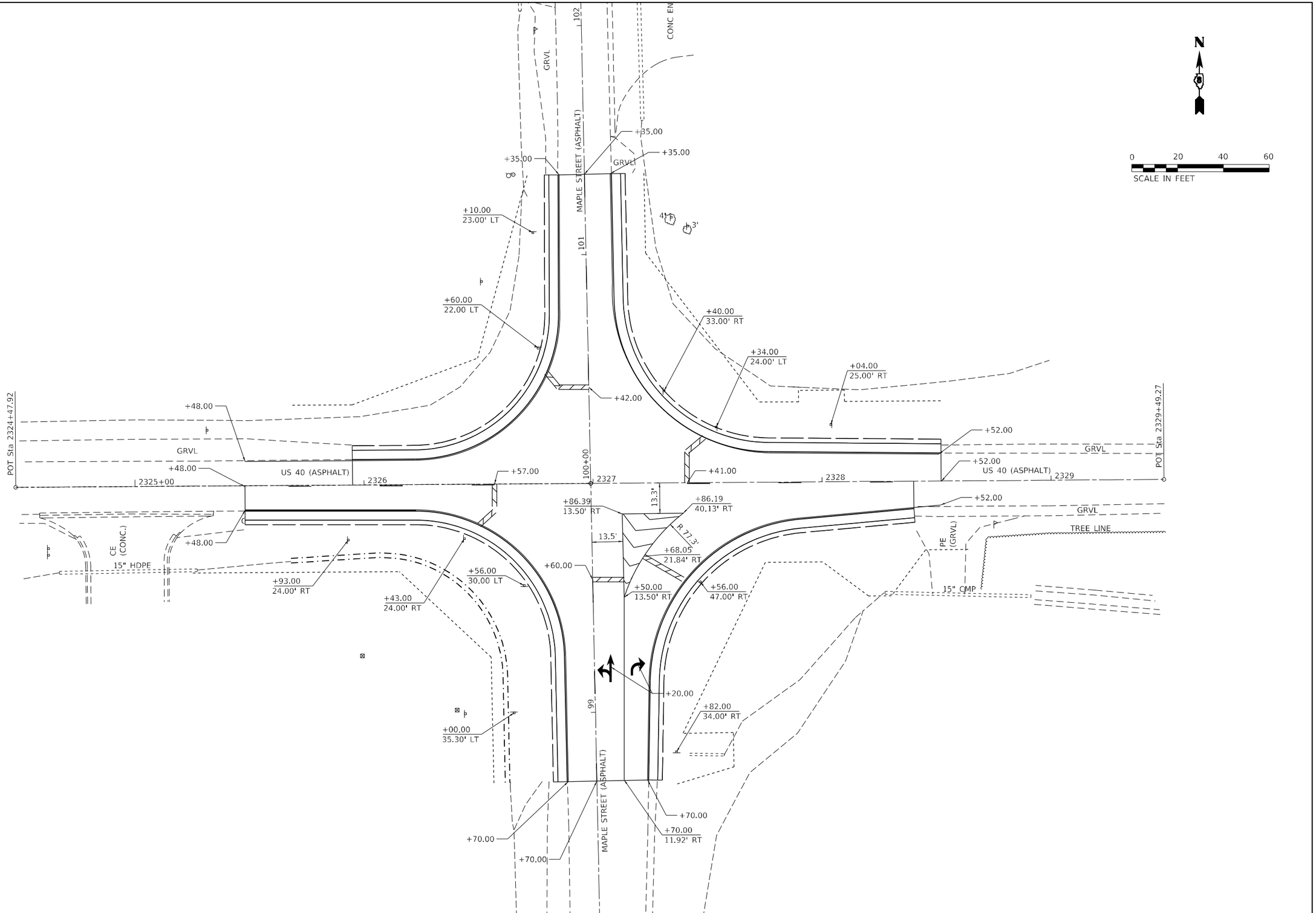


MODEL: Default
FILE NAME: P:\19E3340-76K46 (Section 78R-1)\CADD Sheets\78K46-sht-pmk.dgn

BENTON & ASSOCIATES, INC.
CONSULTING ENGINEERS / LAND SURVEYORS
1970 WEST LAFAYETTE AVE.
JACKSONVILLE, IL 62650
PHONE: 217-243-8140 FAX: 217-243-8149
IL DESIGN FIRM REGISTRATION NO. 184-000852

| | | | |
|---|---|---|---|
| USER NAME = druholl | DESIGNED - DSR | REVISED - | |
| | DRAWN - DSR | REVISED - | |
| PLOT SCALE = 40.0000 ' / in. | CHECKED - WJS | REVISED - | |
| PLOT DATE = 5/12/2022 | DATE - 03-16-2022 | REVISED - | |

**STATE OF ILLINOIS**
**DEPARTMENT OF TRANSPORTATION**

**PAVEMENT MARKING DETAILS**
**(MAPLE ST. & US 40)**

SCALE: | SHEET 7 OF 18 SHEETS | STA. | TO STA.

| F.A.U. RTE. | SECTION | COUNTY | TOTAL SHEETS | SHEET NO. |
|---|---|---|---|---|
| * | (Q-1, X-1, F-1)RS-2,Q-1VBDR-1 | BOND | 108 | 60 |
| * F.A.U. 9832/ F.A.S. 1751 | | CONTRACT NO. 76K46 | | |
| | ILLINOIS | FED. AID PROJECT | | |

| FINAL SURVEY | SURVEYED | BY | DATE |
|---|---|---|---|
| | PLOTTED | | |
| NOTE BOOK | TEMPLATE | | |
| | AREAS | | |
| NO. | AREAS CHECKED | | |

| ORIGINAL SURVEY | SURVEYED | BY | DATE |
|---|---|---|---|
| | PLOTTED | | |
| NOTE BOOK | TEMPLATE | | |
| | AREAS | | |
| NO. | AREAS CHECKED | | |

C = 5.24 Sq. Ft.
F = 0.00 Sq. Ft.

**0 + 80.00**

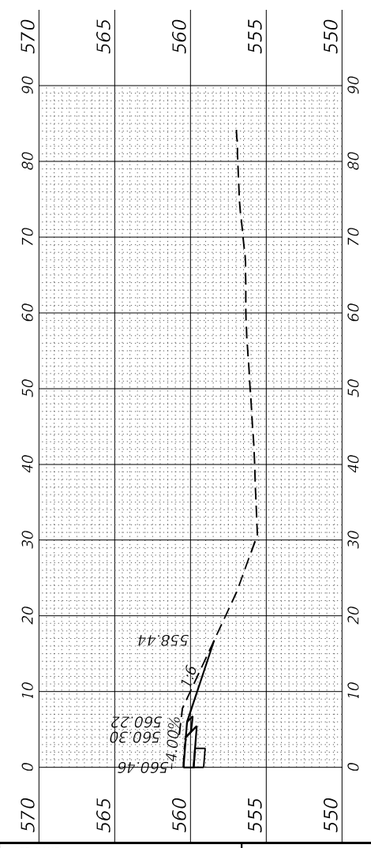


C = 1.61 Sq. Ft.
F = 0.61 Sq. Ft.

**0 + 60.00**

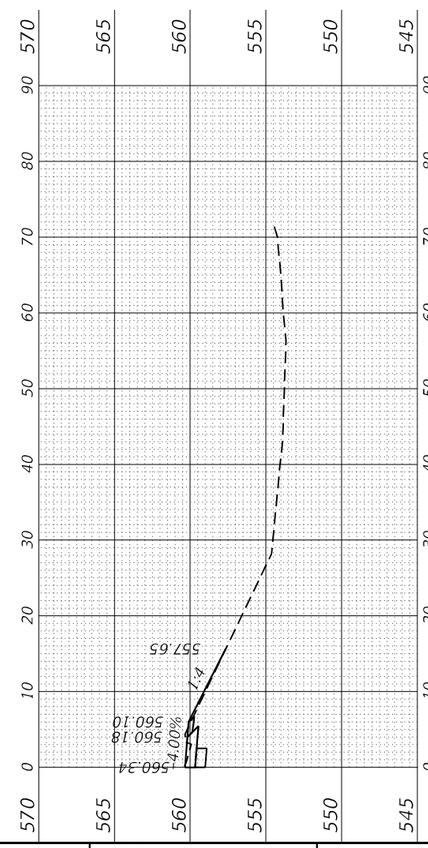


C = 3.20 Sq. Ft.
F = 3.93 Sq. Ft.

**0 + 40.00**

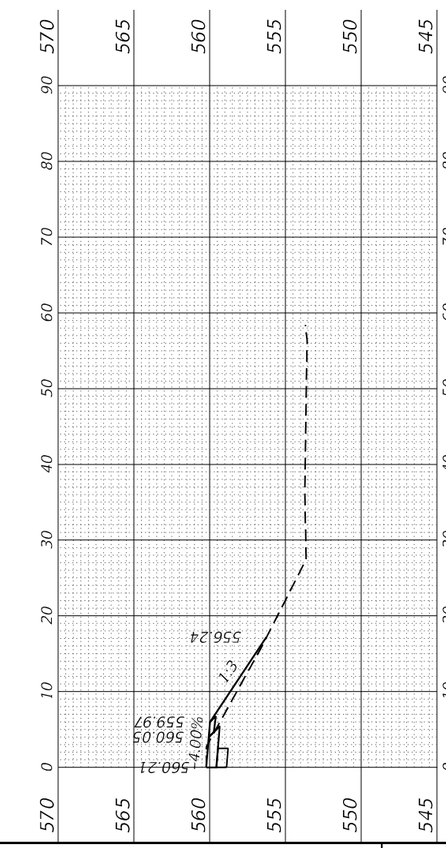


C = 3.15 Sq. Ft.
F = 3.80 Sq. Ft.

**0 + 20.00**

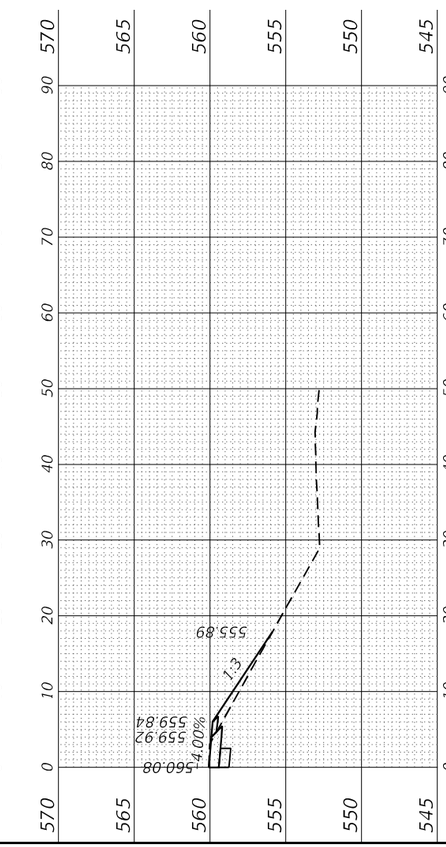


C = 3.13 Sq. Ft.
F = 3.95 Sq. Ft.

**0 + 00.00**

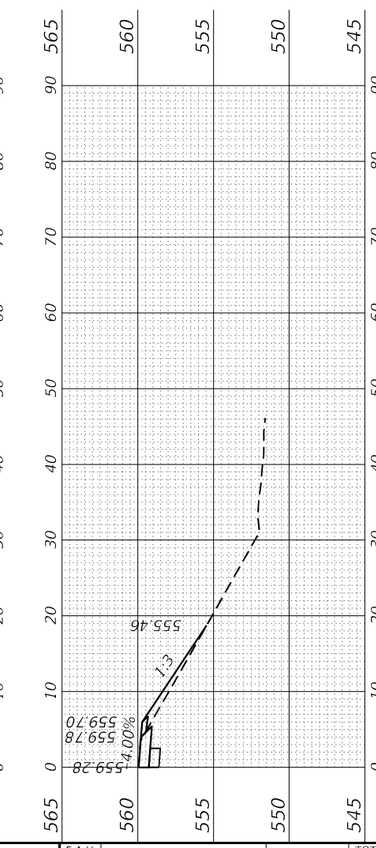


MODEL: Default
FILE NAME: P:\19E3340\76K46 (Section 78R-1)(CADD Sheets\76K46-sht-xs.dgn)

BENTON & ASSOCIATES, INC.
CONSULTING ENGINEERS / LAND SURVEYORS
1970 WEST LAFAYETTE AVE.
JACKSONVILLE, IL 62650
PHONE: 217-245-4146 FAX: 217-245-4149
IL DESIGN FIRM REGISTRATION NO. 184-000852

| | | |
|---|---|---|
| USER NAME = druholl | DESIGNED - DSR | REVISED - |
| | DRAWN - DSR | REVISED - |
| PLOT SCALE = 20.0000 ' / in. | CHECKED - WJS | REVISED - |
| PLOT DATE = 5/12/2022 | DATE - 03-16-2022 | REVISED - |

**STATE OF ILLINOIS**
**DEPARTMENT OF TRANSPORTATION**

**CROSS SECTIONS**
**(NE QUADRANT OF MAPLE ST. & US 40)**

SCALE: | SHEET 8 OF 18 SHEETS | STA. 0+00.00 TO STA. 0+80.00

| F.A.U. RTE. | SECTION | COUNTY | TOTAL SHEETS | SHEET NO. |
|---|---|---|---|---|
| * | (Q-1,X-1,F-1)RS-2, Q-1VBDR-1 | BOND | 108 | 61 |
| *FAU 9832/ FAS 1751 | | CONTRACT NO. 76K46 | | |
| | | ILLINOIS | FED. AID PROJECT | |

| FINAL SURVEY | | BY | DATE |
|---|---|---|---|
| NOTE BOOK NO. | SURVEYED | | |
| | PLOTTED | | |
| | TEMPLATE | | |
| | AREAS | | |
| | AREAS CHECKED | | |

| ORIGINAL SURVEY | | BY | DATE |
|---|---|---|---|
| NOTE BOOK NO. | SURVEYED | | |
| | PLOTTED | | |
| | TEMPLATE | | |
| | AREAS | | |
| | AREAS CHECKED | | |

C = 3.65 Sq. Ft.
F = 0.00 Sq. Ft.

**2 + 00.00**

C = 9.57 Sq. Ft.
F = 0.00 Sq. Ft.

**1 + 80.00**

C = 15.50 Sq. Ft.
F = 0.00 Sq. Ft.

**1 + 60.00**

C = 14.77 Sq. Ft.
F = 0.00 Sq. Ft.

**1 + 40.00**

C = 14.17 Sq. Ft.
F = 0.00 Sq. Ft.

**1 + 20.00**

C = 7.69 Sq. Ft.
F = 0.00 Sq. Ft.

**1 + 00.00**

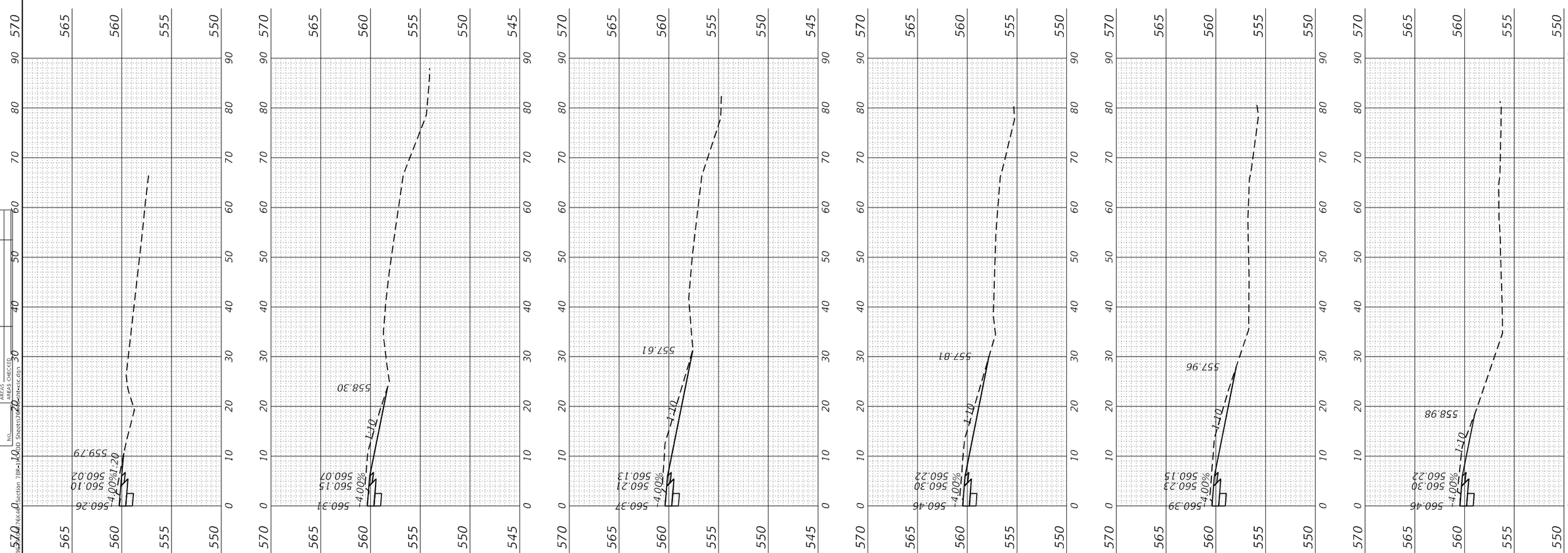


MODEL: Default
FILE NAME: P:\19\76K46\Section 78B+1K0D Sheets\76K46_01xsc.dgn

BENTON & ASSOCIATES, INC.
CONSULTING ENGINEERS / LAND SURVEYORS
1970 WEST LAFAYETTE AVE.
JACKSONVILLE, IL 62650
PHONE: 217-245-4146 FAX: 217-245-4149
IL DESIGN FIRM REGISTRATION NO. 184-000832

| | | |
|---|---|---|
| USER NAME = druholl | DESIGNED - DSR | REVISED - |
| | DRAWN - DSR | REVISED - |
| PLOT SCALE = 20.0000 ' / in. | CHECKED - WJS | REVISED - |
| PLOT DATE = 5/12/2022 | DATE - 03-16-2022 | REVISED - |

**STATE OF ILLINOIS**
**DEPARTMENT OF TRANSPORTATION**

**CROSS SECTIONS**
**(NE QUADRANT OF MAPLE ST. & US 40)**

SCALE: | SHEET 9 OF 18 SHEETS | STA. 1+00.00 TO STA. 2+00.00

| F.A.U. RTE. | SECTION | COUNTY | TOTAL SHEETS | SHEET NO. |
|---|---|---|---|---|
| ~ | (Q-1,X-1,F-1)RS-2, Q-1VBDR-1 | BOND | 108 | 62 |
| *FAU 9832/ FAS 1751 | | CONTRACT NO. 76K46 | | |
| | | ILLINOIS | FED. AID PROJECT | |

| FINAL SURVEY | | BY | DATE |
|---|---|---|---|
| NOTE BOOK NO. | SURVEYED<br>PLOTTED<br>TEMPLATE<br>AREAS<br>AREAS CHECKED | | |

| ORIGINAL SURVEY | | BY | DATE |
|---|---|---|---|
| NOTE BOOK NO. | SURVEYED<br>PLOTTED<br>TEMPLATE<br>AREAS<br>AREAS CHECKED | | |

C = 2.30 Sq. Ft.
F = 1.12 Sq. Ft.

**2+34.94**

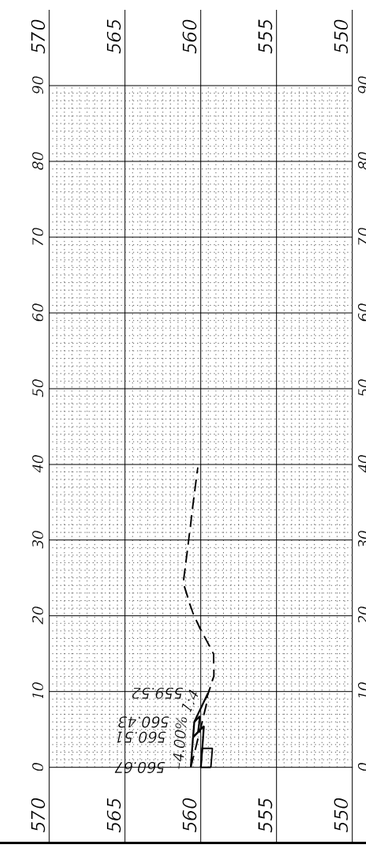


C = 0.27 Sq. Ft.
F = 0.00 Sq. Ft.

**2+20.00**

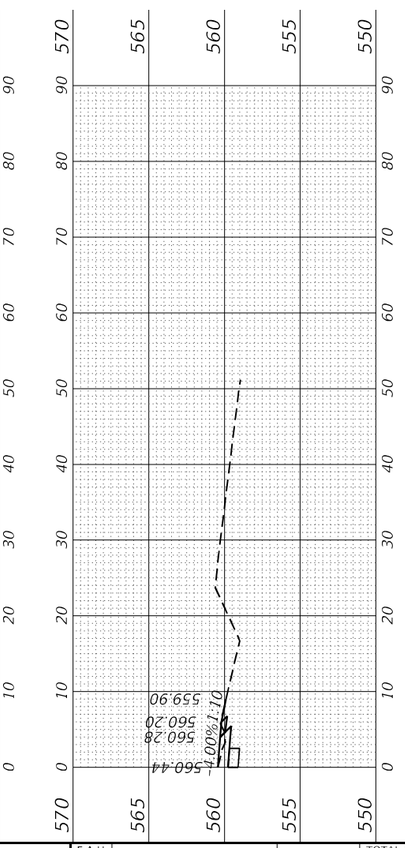


MODEL: Default
FILE NAME: P:\19E334\76K46 (Section 78R-1)\CADD Sheets\76K46-sht-xs.dgn

BENTON & ASSOCIATES, INC.
CONSULTING ENGINEERS / LAND SURVEYORS
1970 WEST LAFAYETTE AVE.
JACKSONVILLE, IL 62650
PHONE: 217-245-4146 FAX: 217-245-4149
IL DESIGN FIRM REGISTRATION NO. 184-000832

| | | | |
|---|---|---|---|
| USER NAME = druholl | DESIGNED - DSR | REVISED - | |
| | DRAWN - DSR | REVISED - | |
| PLOT SCALE = 20.0000 ' / in. | CHECKED - WJS | REVISED - | |
| PLOT DATE = 5/12/2022 | DATE - 03-16-2022 | REVISED - | |

**STATE OF ILLINOIS**
**DEPARTMENT OF TRANSPORTATION**

**CROSS SECTIONS**
**(NE QUADRANT OF MAPLE ST. & US 40)**

SCALE: | SHEET 10 OF 18 SHEETS | STA. 2+20.00 TO STA. 2+34.94

| F.A.U. RTE. | SECTION | COUNTY | TOTAL SHEETS | SHEET NO. |
|---|---|---|---|---|
| - | (Q-1,X-1,F-1)RS-2, Q-1VBDR-1 | BOND | 108 | 63 |
| *FAU 9832/ FAS 1751 | | CONTRACT NO. 76K46 | | |
| | | ILLINOIS | FED. AID PROJECT | |

| FINAL SURVEY | | BY | DATE |
|---|---|---|---|
| NOTE BOOK NO. | SURVEYED | | |
| | PLOTTED | | |
| | TEMPLATE | | |
| | AREAS | | |
| | AREAS CHECKED | | |

| ORIGINAL SURVEY | | BY | DATE |
|---|---|---|---|
| NOTE BOOK NO. | SURVEYED | | |
| | PLOTTED | | |
| | TEMPLATE | | |
| | AREAS | | |
| | AREAS CHECKED | | |

C = 10.16 Sq. Ft.
F = 0.00 Sq. Ft.

**1+00.00**

C = 9.55 Sq. Ft.
F = 0.00 Sq. Ft.

**0+80.00**

C = 8.53 Sq. Ft.
F = 0.00 Sq. Ft.

**0+60.00**

C = 4.65 Sq. Ft.
F = 0.00 Sq. Ft.

**0+40.00**

C = 0.00 Sq. Ft.
F = 1.33 Sq. Ft.

**0+20.00**

C = 3.56 Sq. Ft.
F = 0.00 Sq. Ft.

**0+00.00**

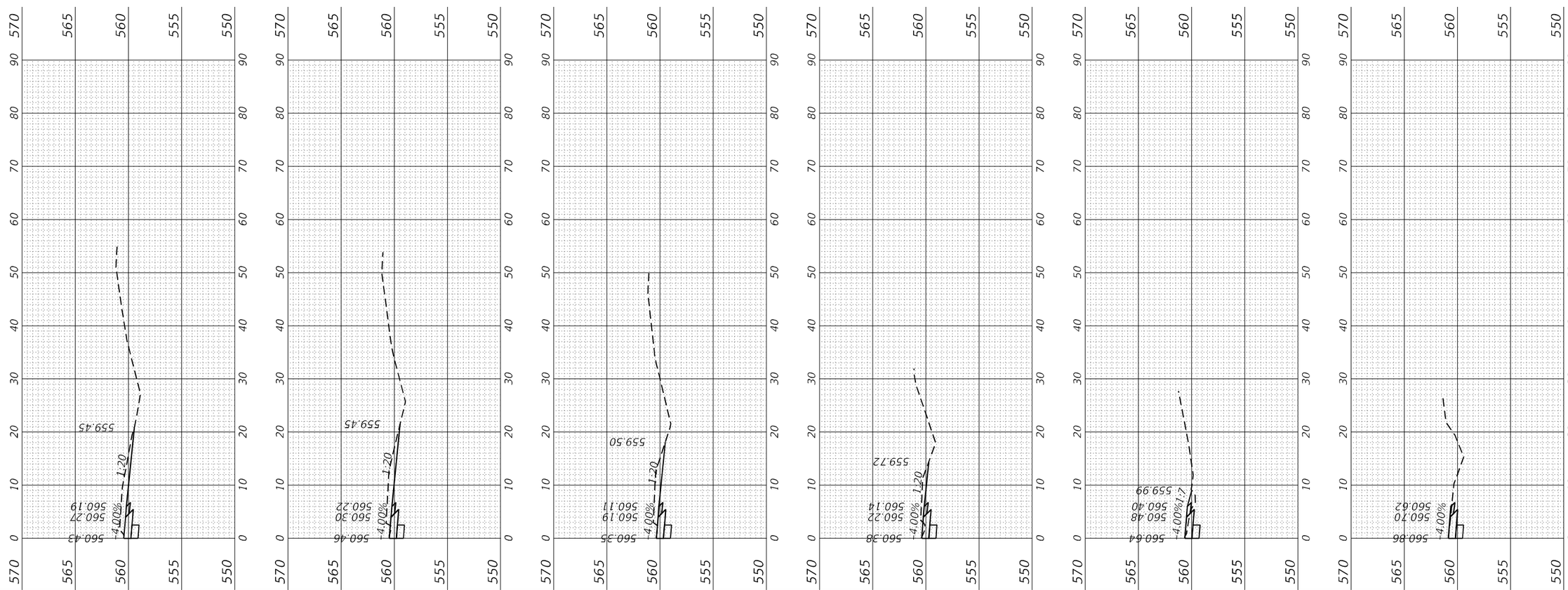


MODEL: Default
FILE NAME: P:\19E3340\76K46 (Section 78R-1)\CADD Sheets\76K46-sht-xs.dgn


BENTON & ASSOCIATES, INC.
CONSULTING ENGINEERS / LAND SURVEYORS
1970 WEST LAFAYETTE AVE.
JACKSONVILLE, IL 62650
PHONE: 217-245-4146 FAX: 217-245-4149
IL DESIGN FIRM REGISTRATION NO. 184-000832


| | | |
|---|---|---|
| USER NAME = druholl | DESIGNED - DSR | REVISED - |
| | DRAWN - DSR | REVISED - |
| PLOT SCALE = 20.0000 ' / in. | CHECKED - WJS | REVISED - |
| PLOT DATE = 5/12/2022 | DATE - 03-16-2022 | REVISED - |

**STATE OF ILLINOIS**
**DEPARTMENT OF TRANSPORTATION**

**CROSS SECTIONS**
**(NW QUADRANT OF MAPLE ST. & US 40)**

SCALE: | SHEET 11 OF 18 SHEETS | STA. 0+00.00 TO STA. 1+00.00

| F.A.U. RTE. | SECTION | COUNTY | TOTAL SHEETS | SHEET NO. |
|---|---|---|---|---|
| * | (Q-1,X-1,F-1)RS-2, Q-1VBDR-1 | BOND | 108 | 64 |
| *FAU 9832/ FAS 1751 | | CONTRACT NO. 76K46 | | |
| | | ILLINOIS | FED. AID PROJECT | |

| FINAL SURVEY | | BY | DATE |
|---|---|---|---|
| NOTE BOOK NO. | SURVEYED | | |
| | PLOTTED | | |
| | TEMPLATE | | |
| | AREAS | | |
| | AREAS CHECKED | | |

| ORIGINAL SURVEY | | BY | DATE |
|---|---|---|---|
| NOTE BOOK NO. | SURVEYED | | |
| | PLOTTED | | |
| | TEMPLATE | | |
| | AREAS | | |
| | AREAS CHECKED | | |

C = 7.13 Sq. Ft.
F = 0.00 Sq. Ft.

**1+87.13**

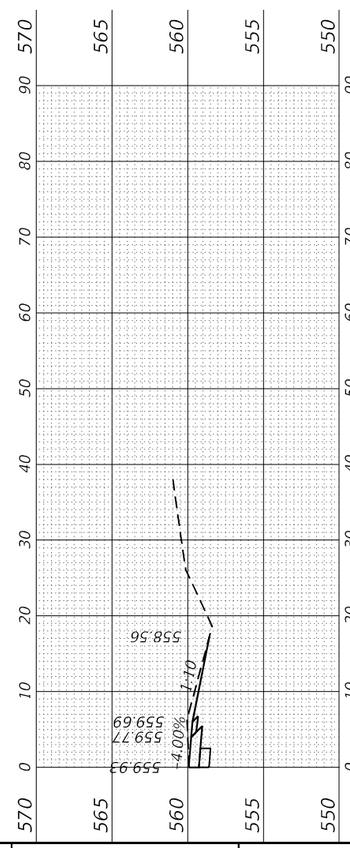


C = 3.93 Sq. Ft.
F = 3.46 Sq. Ft.

**1+80.00**

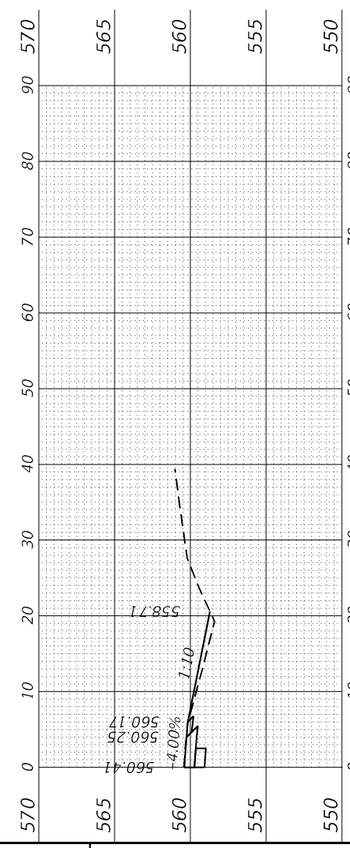


C = 5.32 Sq. Ft.
F = 0.00 Sq. Ft.

**1+60.00**

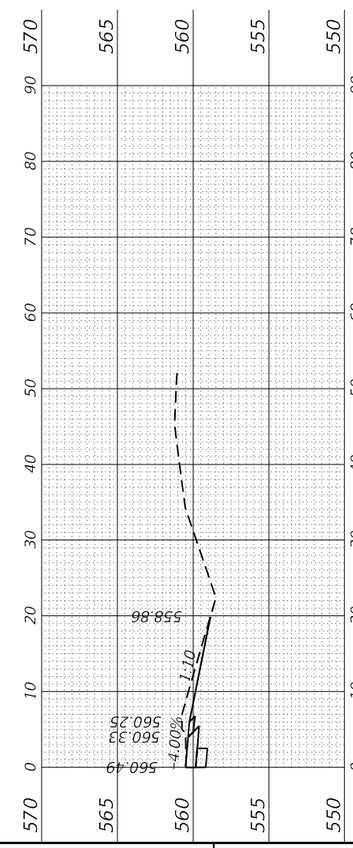


C = 6.87 Sq. Ft.
F = 0.00 Sq. Ft.

**1+40.00**

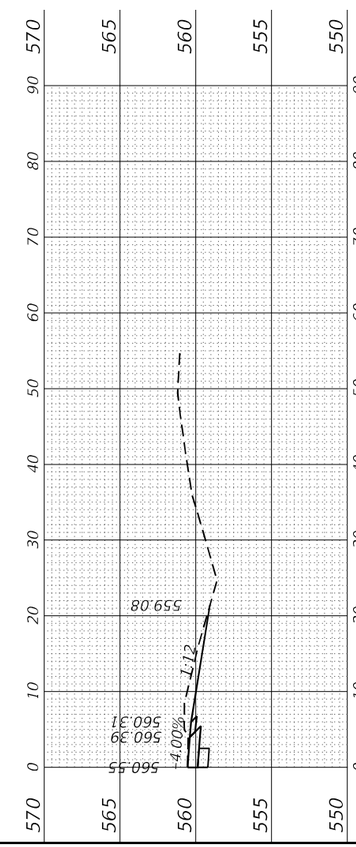


C = 8.59 Sq. Ft.
F = 0.00 Sq. Ft.

**1+20.00**

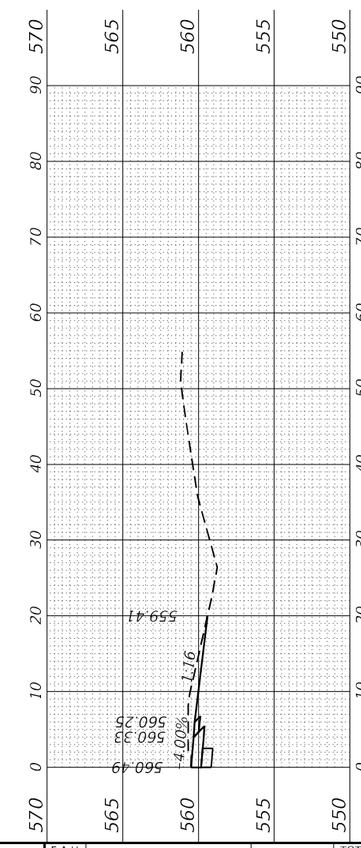


MODEL: Default
FILE NAME: P:\19E3340\76K46 (Section 78R-1)\CADD Sheets\76K46-sht-xs.dgn


BENTON & ASSOCIATES, INC.
CONSULTING ENGINEERS / LAND SURVEYORS
1970 WEST LAFAYETTE AVE.
JACKSONVILLE, IL 62650
PHONE: 217-243-4146 FAX: 217-243-4149
IL DESIGN FIRM REGISTRATION NO. 184-000832


| | | |
|---|---|---|
| USER NAME = druholl | DESIGNED - DSR | REVISED - |
| | DRAWN - DSR | REVISED - |
| PLOT SCALE = 20.0000 ' / in. | CHECKED - WJS | REVISED - |
| PLOT DATE = 5/12/2022 | DATE - 03-16-2022 | REVISED - |

**STATE OF ILLINOIS**
**DEPARTMENT OF TRANSPORTATION**

**CROSS SECTIONS**
**(NW QUADRANT OF MAPLE ST. & US 40)**

SCALE: | SHEET 12 OF 18 SHEETS | STA. 1+20.00 TO STA. 1+87.13

| F.A.U. RTE. | SECTION | COUNTY | TOTAL SHEETS | SHEET NO. |
|---|---|---|---|---|
| * | (Q-1,X-1,F-1)RS-2, Q-1VBDR-1 | BOND | 108 | 65 |
| *FAU 9832/ FAS 1751 | | CONTRACT NO. 76K46 | | |
| | | ILLINOIS | FED. AID PROJECT | |

| FINAL SURVEY | | BY | DATE |
|---|---|---|---|
| NOTE BOOK | SURVEYED | | |
| | PLOTTED | | |
| | TEMPLATE | | |
| | AREAS | | |
| NO. | AREAS CHECKED | | |

| ORIGINAL SURVEY | | BY | DATE |
|---|---|---|---|
| NOTE BOOK | SURVEYED | | |
| | PLOTTED | | |
| | TEMPLATE | | |
| | AREAS | | |
| NO. | AREAS CHECKED | | |

C = 6.33 Sq. Ft.
F = 0.00 Sq. Ft.

**0+80.00**

C = 2.54 Sq. Ft.
F = 0.00 Sq. Ft.

**0+60.00**

C = 3.67 Sq. Ft.
F = 0.00 Sq. Ft.

**0+40.00**

C = 2.34 Sq. Ft.
F = 0.00 Sq. Ft.

**0+20.00**

C = 3.72 Sq. Ft.
F = 0.00 Sq. Ft.

**0+00.00**

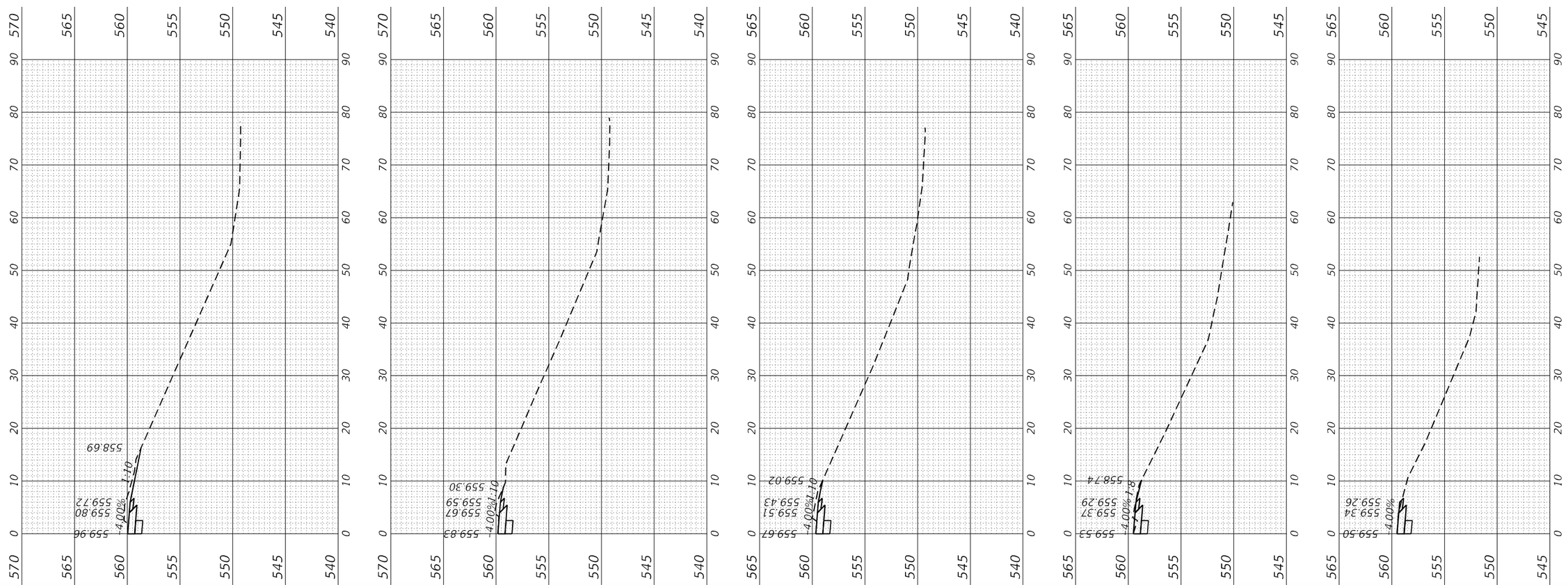


MODEL: Default
FILE NAME: P:\19E3340\76K46 (Section 78R-1)\CADD Sheets\76K46-sht-xs.dgn

BENTON & ASSOCIATES, INC.
CONSULTING ENGINEERS / LAND SURVEYORS
1970 WEST LAFAYETTE AVE.
JACKSONVILLE, IL 62650
PHONE: 217-245-4146 FAX: 217-245-4149
IL DESIGN FIRM REGISTRATION NO. 184-000832

| | | |
|---|---|---|
| USER NAME = druholl | DESIGNED - DSR | REVISED - |
| | DRAWN - DSR | REVISED - |
| PLOT SCALE = 20.0000 ' / in. | CHECKED - WJS | REVISED - |
| PLOT DATE = 5/12/2022 | DATE - 03-16-2022 | REVISED - |

**STATE OF ILLINOIS**
**DEPARTMENT OF TRANSPORTATION**

**CROSS SECTIONS**
**(SE QUADRANT OF MAPLE ST. & US 40)**

SCALE: | SHEET 13 OF 18 SHEETS | STA. 0+00.00 TO STA. 0+80.00

| F.A.U. RTE. | SECTION | COUNTY | TOTAL SHEETS | SHEET NO. |
|---|---|---|---|---|
| * | (Q-1,X-1,F-1)RS-2, Q-1VBDR-1 | BOND | 108 | 66 |
| *FAU 9832/ FAS 1751 | | CONTRACT NO. 76K46 | | |
| | | ILLINOIS | FED. AID PROJECT | |

| FINAL SURVEY | | BY | DATE |
|---|---|---|---|
| NOTE BOOK NO. | SURVEYED | | |
| | PLOTTED | | |
| | TEMPLATE | | |
| | AREAS | | |
| | AREAS CHECKED | | |

| ORIGINAL SURVEY | | BY | DATE |
|---|---|---|---|
| NOTE BOOK NO. | SURVEYED | | |
| | PLOTTED | | |
| | TEMPLATE | | |
| | AREAS | | |
| | AREAS CHECKED | | |

C = 4.11 Sq. Ft.
F = 0.00 Sq. Ft.

**1+60.00**

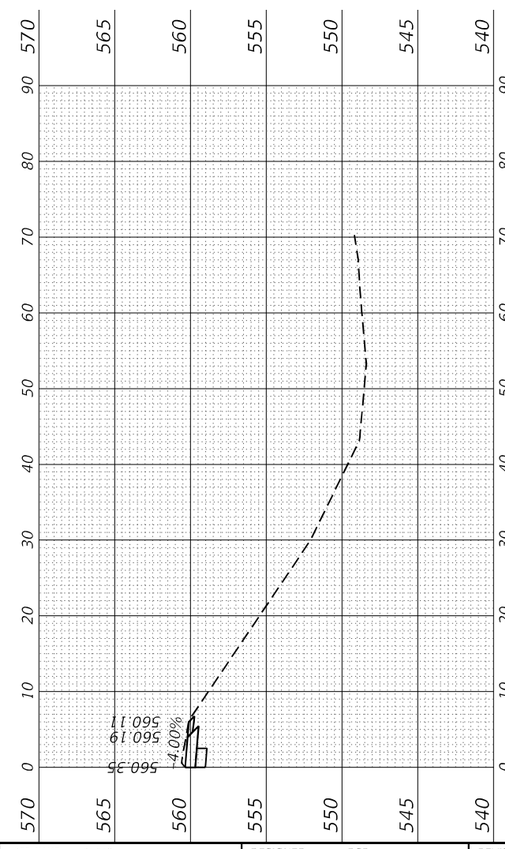


C = 5.32 Sq. Ft.
F = 0.00 Sq. Ft.

**1+40.00**

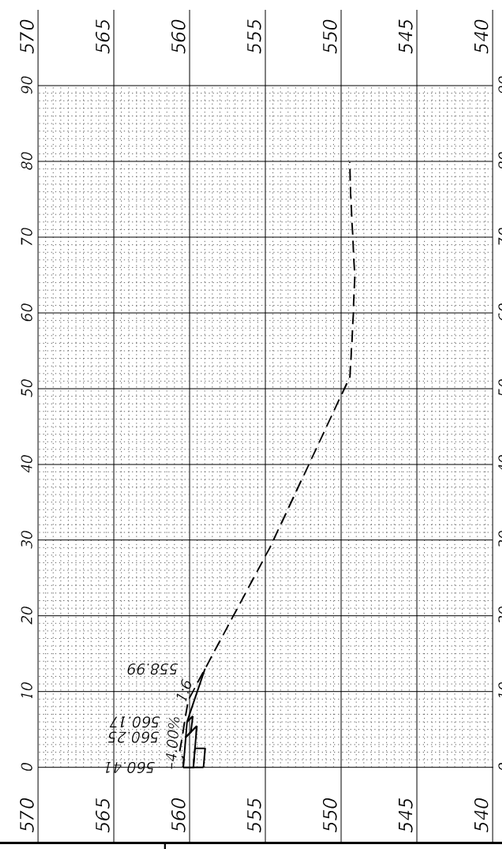


C = 4.79 Sq. Ft.
F = 0.00 Sq. Ft.

**1+20.00**

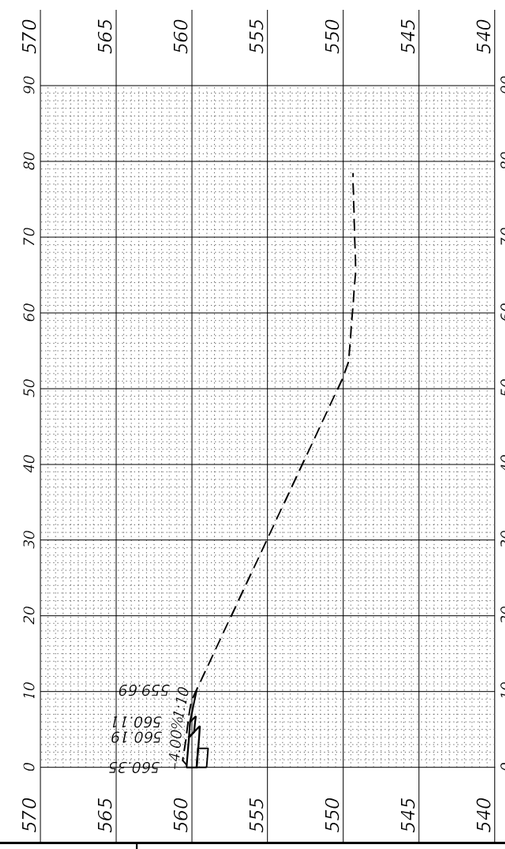


C = 6.17 Sq. Ft.
F = 0.00 Sq. Ft.

**1+00.00**

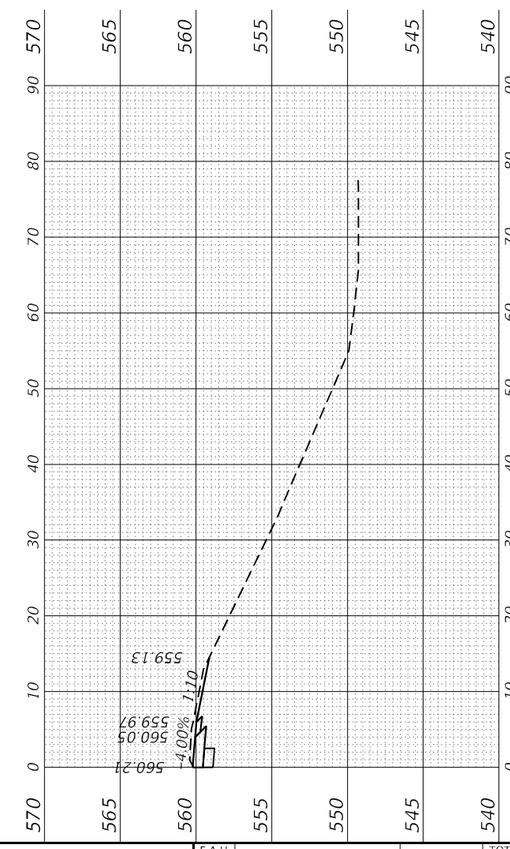


MODEL: Default
FILE NAME: P:\19E3340\76K46 (Section 78R-1)\CADD Sheets\76K46-sht-xsc.dgn


BENTON & ASSOCIATES, INC.
CONSULTING ENGINEERS / LAND SURVEYORS
1970 WEST LAFAYETTE AVE.
JACKSONVILLE, IL 62650
PHONE: 217-245-4146 FAX: 217-245-4149
IL DESIGN FIRM REGISTRATION NO. 184-000852


| | | |
|---|---|---|
| USER NAME = druholl | DESIGNED - DSR | REVISED - |
| | DRAWN - DSR | REVISED - |
| PLOT SCALE = 20.0000 ' / in. | CHECKED - WJS | REVISED - |
| PLOT DATE = 5/12/2022 | DATE - 03-16-2022 | REVISED - |

**STATE OF ILLINOIS**
**DEPARTMENT OF TRANSPORTATION**

**CROSS SECTIONS**
**(SE QUADRANT OF MAPLE ST. & US 40)**

SCALE: | SHEET 14 OF 18 SHEETS | STA. 1+00.00 TO STA. 1+60.00

| F.A.U. RTE. | SECTION | COUNTY | TOTAL SHEETS | SHEET NO. |
|---|---|---|---|---|
| * | (Q-1,X-1,F-1)RS-2, Q-1VBDR-1 | BOND | 108 | 67 |
| *FAU 9832/ FAS 1751 | | CONTRACT NO. 76K46 | | |
| | | ILLINOIS | FED. AID PROJECT | |

| FINAL SURVEY | | BY | DATE |
|---|---|---|---|
| NOTE BOOK NO. | SURVEYED ____ PLOTTED ____ TEMPLATE ____ AREAS ____ AREAS CHECKED ____ | | |

| ORIGINAL SURVEY | | BY | DATE |
|---|---|---|---|
| NOTE BOOK NO. | SURVEYED ____ PLOTTED ____ TEMPLATE ____ AREAS ____ AREAS CHECKED ____ | | |

C = 2.74 Sq. Ft.
F = 1.37 Sq. Ft.

**1+98.63**

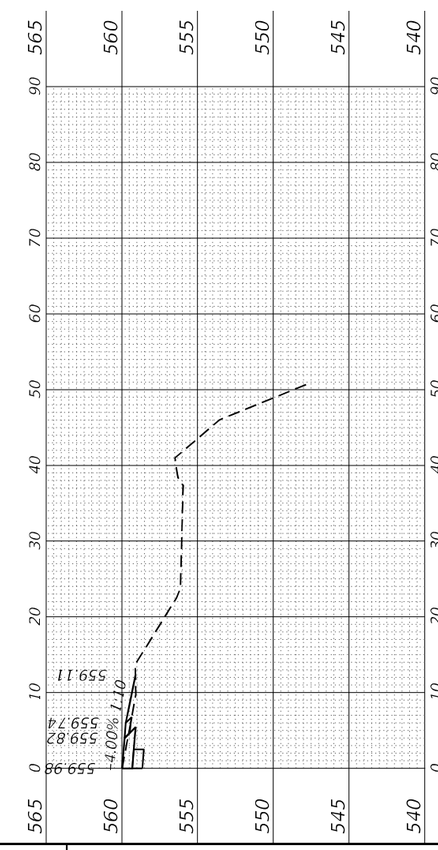


C = 4.65 Sq. Ft.
F = 7.61 Sq. Ft.

**1+80.00**

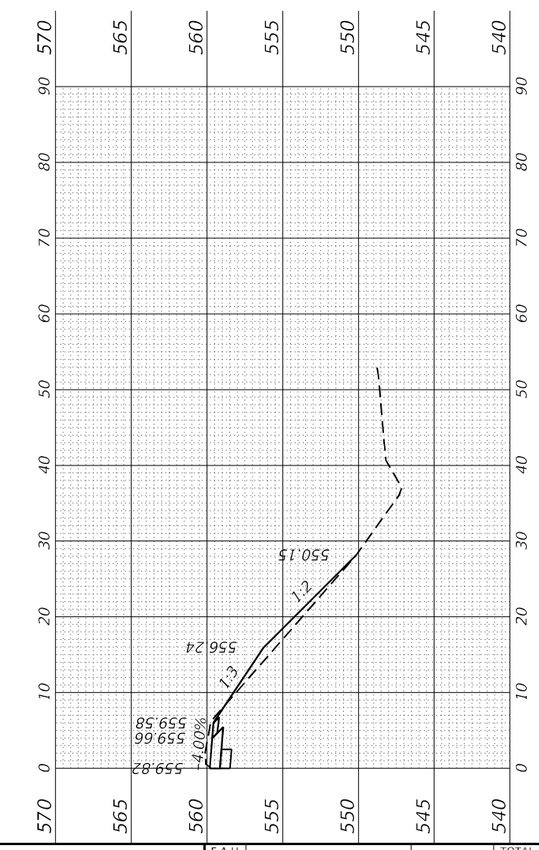


MODEL: Default
FILE NAME: P:\19E3340\76K46 (Section 78R-1)\CADD Sheets\76K46-sht-xs.dgn

| | | | |
|---|---|---|---|
| BENTON & ASSOCIATES, INC. CONSULTING ENGINEERS / LAND SURVEYORS 1970 WEST LAFAYETTE AVE. JACKSONVILLE, IL 62650 PHONE: 217-245-4146 FAX: 217-245-4149 IL DESIGN FIRM REGISTRATION NO. 184-000832 | USER NAME = druholl | DESIGNED - DSR | REVISED - |
| | | DRAWN - DSR | REVISED - |
| | PLOT SCALE = 20.0000 ' / in. | CHECKED - WJS | REVISED - |
| | PLOT DATE = 5/12/2022 | DATE - 03-16-2022 | REVISED - |

**STATE OF ILLINOIS**
**DEPARTMENT OF TRANSPORTATION**

**CROSS SECTIONS**
**(SE QUADRANT OF MAPLE ST. & US 40)**

SCALE: | SHEET 15 OF 18 SHEETS | STA. 1+80.00 TO STA. 1+98.63

| F.A.U. RTE. | SECTION | COUNTY | TOTAL SHEETS | SHEET NO. |
|---|---|---|---|---|
| * | (Q-1,X-1,F-1)RS-2, Q-1VBDR-1 | BOND | 108 | 68 |
| *FAU 9832/ FAS 1751 | | CONTRACT NO. 76K46 | | |
| | | ILLINOIS | FED. AID PROJECT | |

| FINAL SURVEY | | BY | DATE |
|---|---|---|---|
| NOTE BOOK | SURVEYED | | |
| | PLOTTED | | |
| | TEMPLATE | | |
| | AREAS | | |
| | AREAS CHECKED | | |
| NO. | | | |

| ORIGINAL SURVEY | | BY | DATE |
|---|---|---|---|
| NOTE BOOK | SURVEYED | | |
| | PLOTTED | | |
| | TEMPLATE | | |
| | AREAS | | |
| | AREAS CHECKED | | |
| NO. | | | |

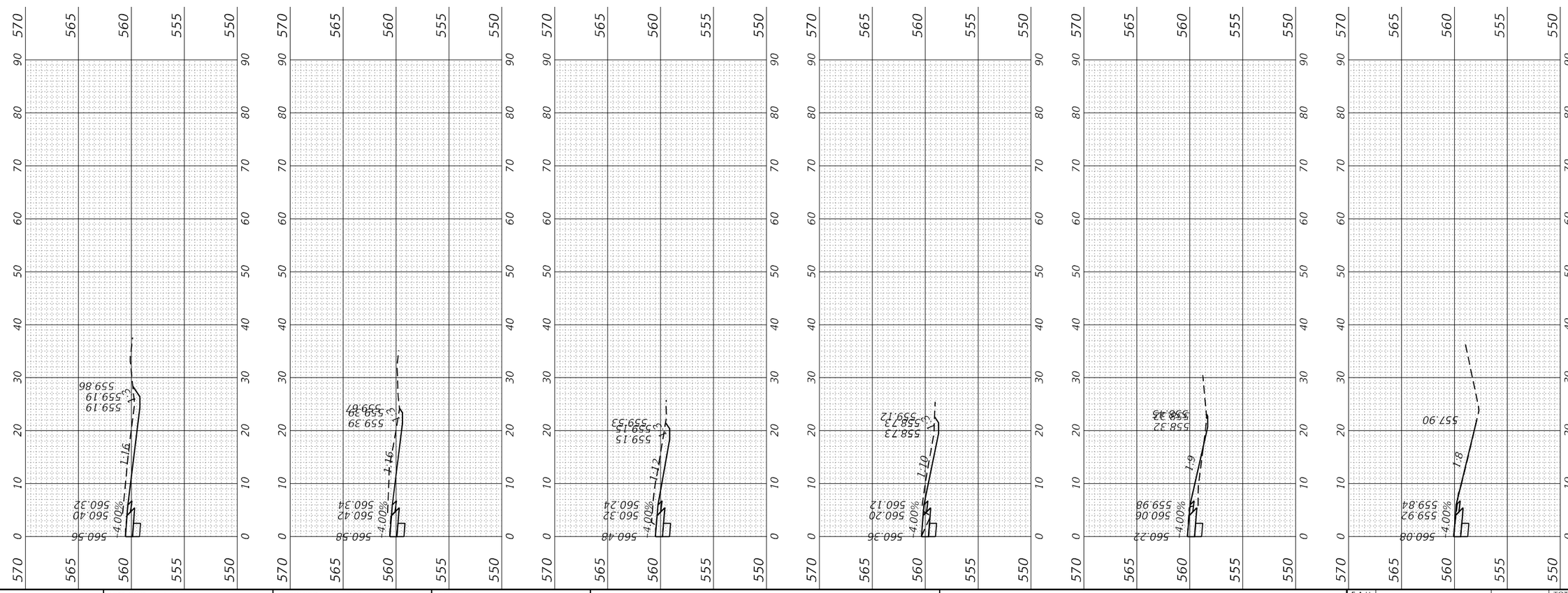


MODEL: Default
FILE NAME: P:\19E334\76K46 (Section 78R-1)\CADD Sheets\76K46-sht-xs.dgn

BENTON & ASSOCIATES, INC.
CONSULTING ENGINEERS / LAND SURVEYORS
1970 WEST LAFAYETTE AVE.
JACKSONVILLE, IL 62650
PHONE: 217-245-4146 FAX: 217-245-4149
IL DESIGN FIRM REGISTRATION NO. 184-000832

| | | |
|---|---|---|
| USER NAME = druholl | DESIGNED - DSR | REVISED - |
| | DRAWN - DSR | REVISED - |
| PLOT SCALE = 20.0000 ' / in. | CHECKED - WJS | REVISED - |
| PLOT DATE = 5/12/2022 | DATE - 03-16-2022 | REVISED - |

**STATE OF ILLINOIS**
**DEPARTMENT OF TRANSPORTATION**

**CROSS SECTIONS**
**(SW QUADRANT OF MAPLE ST. & US 40)**

SCALE: SHEET 16 OF 18 SHEETS STA. 0+00.00 TO STA. 1+00.00

| F.A.U. RTE. | SECTION | COUNTY | TOTAL SHEETS | SHEET NO. |
|---|---|---|---|---|
| * | (Q-1,X-1,F-1)RS-2, Q-1VBDR-1 | BOND | 108 | 69 |
| *FAU 9832/ FAS 1751 | | CONTRACT NO. 76K46 | | |
| | | ILLINOIS | FED. AID PROJECT | |

| FINAL SURVEY | | BY | DATE |
|---|---|---|---|
| NOTE BOOK NO. | SURVEYED | | |
| | PLOTTED | | |
| | TEMPLATE | | |
| | AREAS | | |
| | AREAS CHECKED | | |

| ORIGINAL SURVEY | | BY | DATE |
|---|---|---|---|
| NOTE BOOK NO. | SURVEYED | | |
| | PLOTTED | | |
| | TEMPLATE | | |
| | AREAS | | |
| | AREAS CHECKED | | |

C = 5.49 Sq. Ft.
F = 0.48 Sq. Ft.

**2+20.00**

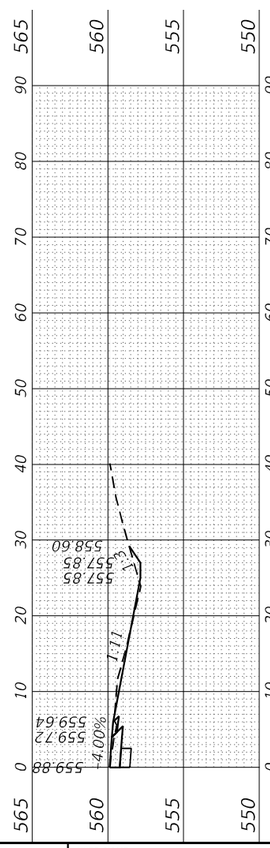


C = 8.58 Sq. Ft.
F = 0.80 Sq. Ft.

**2+00.00**

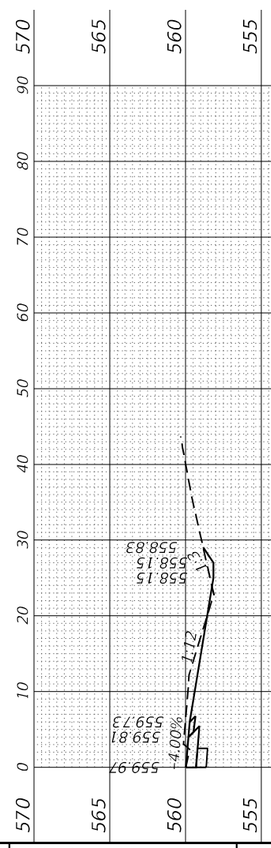


C = 10.54 Sq. Ft.
F = 0.04 Sq. Ft.

**1+80.00**

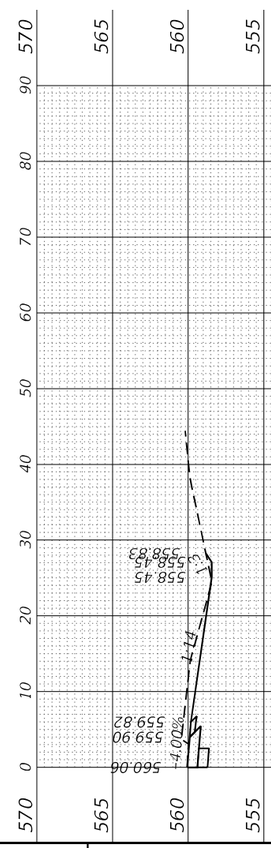


C = 11.66 Sq. Ft.
F = 0.00 Sq. Ft.

**1+60.00**


C = 13.68 Sq. Ft.
F = 0.00 Sq. Ft.

**1+40.00**

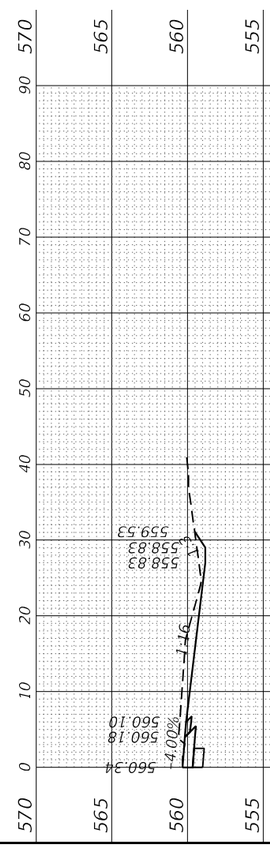


C = 13.95 Sq. Ft.
F = 0.00 Sq. Ft.

**1+20.00**

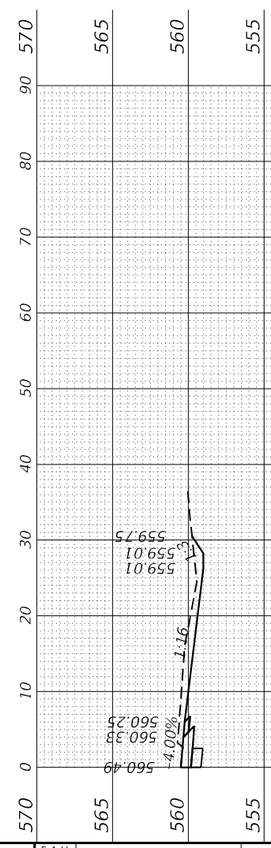


MODEL: Default
FILE NAME: P:\19E3340-6\76K46 (Section 78R-1)\CADD Sheets\76K46-plt-xsc.dgn

BENTON & ASSOCIATES, INC.
CONSULTING ENGINEERS / LAND SURVEYORS
1970 WEST LAFAYETTE AVE.
JACKSONVILLE, IL 62650
PHONE: 217-245-4146 FAX: 217-245-4149
IL DESIGN FIRM REGISTRATION NO. 184-000852

| | | |
|---|---|---|
| USER NAME = druholl | DESIGNED - DSR | REVISED - |
| | DRAWN - DSR | REVISED - |
| PLOT SCALE = 20.0000 ' / in. | CHECKED - WJS | REVISED - |
| PLOT DATE = 5/12/2022 | DATE - 03-16-2022 | REVISED - |

**STATE OF ILLINOIS**
**DEPARTMENT OF TRANSPORTATION**

**CROSS SECTIONS**
**(SW QUADRANT OF MAPLE ST. & US 40)**

SCALE: SHEET 17 OF 18 SHEETS STA. 1+20.00 TO STA. 2+20.00

| F.A.U. RTE. | SECTION | COUNTY | TOTAL SHEETS | SHEET NO. |
|---|---|---|---|---|
| * | (Q-1,X-1,F-1)RS-2, Q-1VBDR-1 | BOND | 108 | 70 |
| *FAU 9832/ FAS 1751 | | CONTRACT NO. 76K46 | | |
| | | ILLINOIS | FED. AID PROJECT | |

| FINAL SURVEY | | BY | DATE |
|---|---|---|---|
| NOTE BOOK NO. | SURVEYED ____ PLOTTED ____ TEMPLATE ____ AREAS ____ AREAS CHECKED ____ | | |

| ORIGINAL SURVEY | | BY | DATE |
|---|---|---|---|
| NOTE BOOK NO. | SURVEYED ____ PLOTTED ____ TEMPLATE ____ AREAS ____ AREAS CHECKED ____ | | |

C = 3.17 Sq. Ft.
F = 2.70 Sq. Ft.

**2 + 29.81**

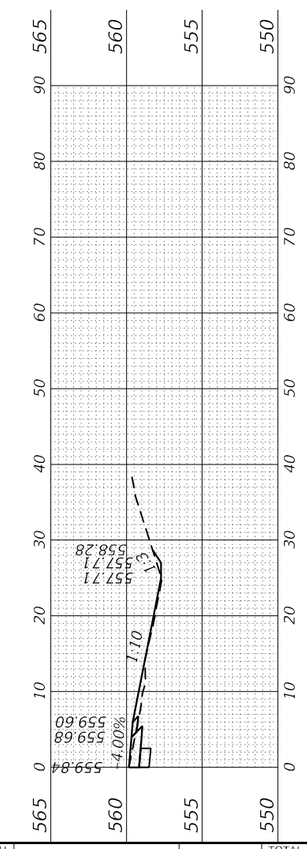


MODEL: Default
FILE NAME: P:\19E3340\76K46 (Section 78R-1)\CADD Sheets\76K46-sht-xs.dgn

BENTON & ASSOCIATES, INC.
CONSULTING ENGINEERS / LAND SURVEYORS
1970 WEST LAFAYETTE AVE.
JACKSONVILLE, IL 62650
PHONE: 217-245-4146 FAX: 217-245-4149
IL DESIGN FIRM REGISTRATION NO. 184-000832

| | | | |
|---|---|---|---|
| USER NAME = druholl | DESIGNED - DSR | REVISED - | |
| | DRAWN - DSR | REVISED - | |
| PLOT SCALE = 20.0000 ' / in. | CHECKED - WJS | REVISED - | |
| PLOT DATE = 5/12/2022 | DATE - 03-16-2022 | REVISED - | |

**STATE OF ILLINOIS**
**DEPARTMENT OF TRANSPORTATION**

**CROSS SECTIONS**
**(SW QUADRANT OF MAPLE ST. & US 40)**

SCALE: | SHEET 18 OF 18 SHEETS | STA. 2+29.81 TO STA. 2+29.81

| F.A.U. RTE. | SECTION | COUNTY | TOTAL SHEETS | SHEET NO. |
|---|---|---|---|---|
| * | (Q-1,X-1,F-1)RS-2, Q-1VBDR-1 | BOND | 108 | 71 |
| *FAU 9832/ FAS 1751 | | CONTRACT NO. 76K46 | | |
| | ILLINOIS | FED. AID PROJECT | | |

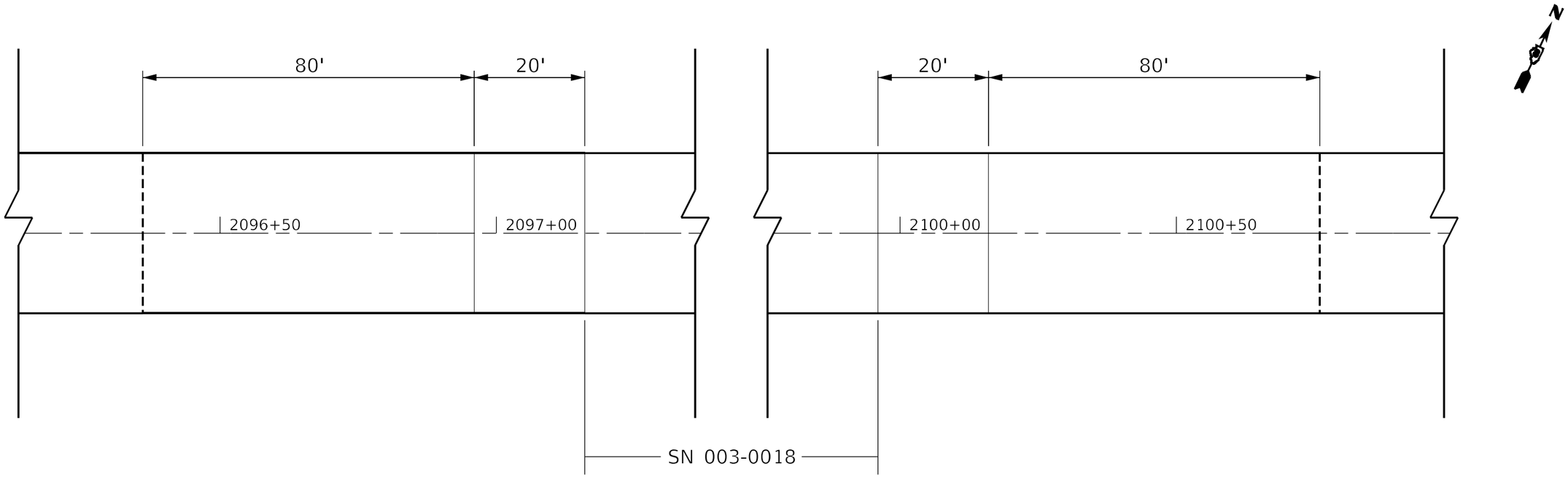


NOT TO SCALE

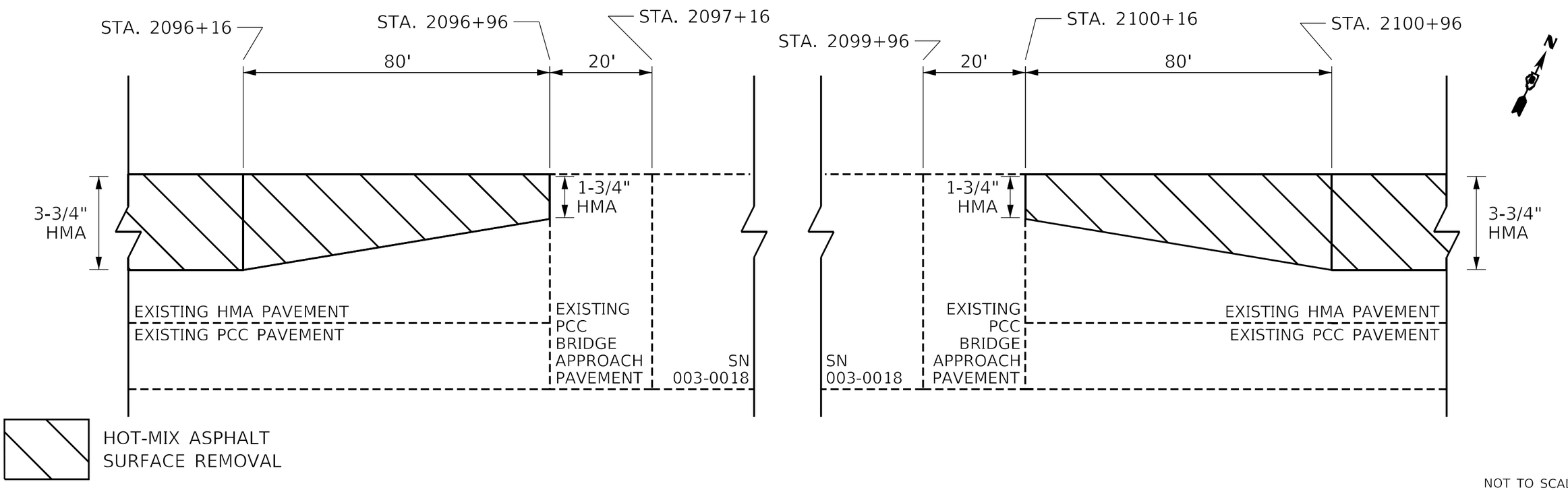


NOT TO SCALE

MODEL: Default
FILE NAME: pw:\\ildot-pw.bentley.com:PWIDOT\Documents\IDOT Offices\District 8\Projects\D87BK46\CADData\CADsheets\D876K46-sht-plan.dgn

| | | | |
|---|---|---|---|
| USER NAME = humphreysb | DESIGNED - | REVISED - | |
| | DRAWN - | REVISED - | |
| PLOT SCALE = 40.0000 ' / in. | CHECKED - | REVISED - | |
| PLOT DATE = 5/13/2022 | DATE - | REVISED - | |

**STATE OF ILLINOIS**
**DEPARTMENT OF TRANSPORTATION**

**BRIDGE APPROACH REMOVAL**
**DETAILS – SN 003–0018**

SCALE: NTS | SHEET 1 OF 2 SHEETS | STA. TO STA.

| **F.A. RTE. | SECTION | COUNTY | TOTAL SHEETS | SHEET NO. |
|---|---|---|---|---|
| ** | (Q-1,X-1,F-1)RS-2, Q-1VBDR-1 | BOND | 113 | 72 |
| **FAU 9832, FAS 1751 | | CONTRACT NO. 76K46 | | |
| | | ILLINOIS FED. AID PROJECT | | |

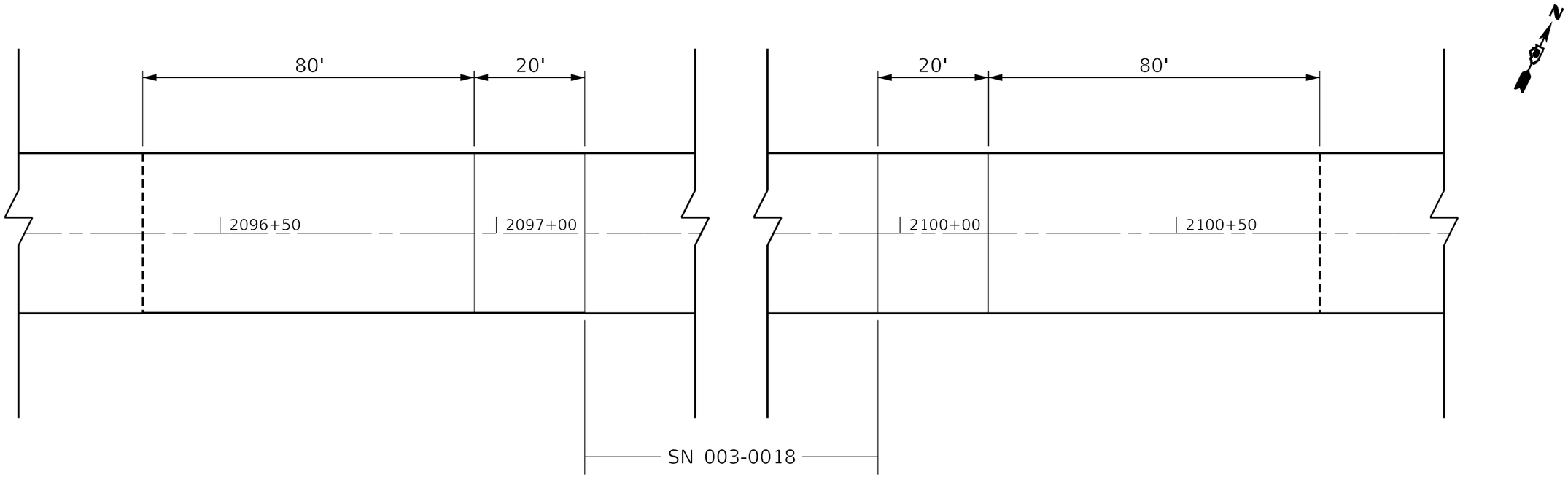


NOT TO SCALE

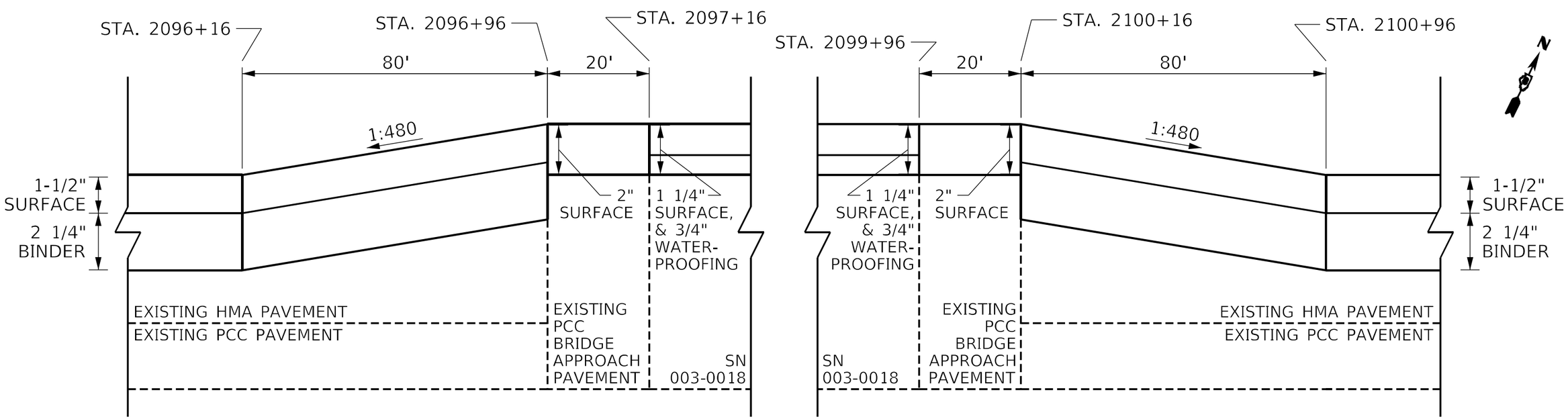


NOT TO SCALE

MODEL: Default
FILE NAME: pw:\\ildot-pw.bentley.com:PWIDOT\Documents\IDOT Offices\District 8\Projects\D8*76K46\CADData\CADsheets\D876K46-h-plan.dgn

| | | | | | |
|---|---|---|---|---|---|
| USER NAME = humphreysb | DESIGNED - | REVISED - | STATE OF ILLINOIS DEPARTMENT OF TRANSPORTATION | BRIDGE APPROACH DETAILS – SN 003–0018 | |
| | DRAWN - | REVISED - | | | |
| PLOT SCALE = 40.0000 ' / in. | CHECKED - | REVISED - | | | |
| PLOT DATE = 5/13/2022 | DATE - | REVISED - | | SCALE: NTS / SHEET 2 OF 2 SHEETS / STA. TO STA. | |

| **F.A. RTE. | SECTION | COUNTY | TOTAL SHEETS | SHEET NO. |
|---|---|---|---|---|
| ** | (Q-1,X-1,F-1)RS-2, Q-1VBDR-1 | BOND | 113 | 73 |
| **FAU 9832, FAS 1751 | | CONTRACT NO. 76K46 | | |
| | | ILLINOIS FED. AID PROJECT | | |

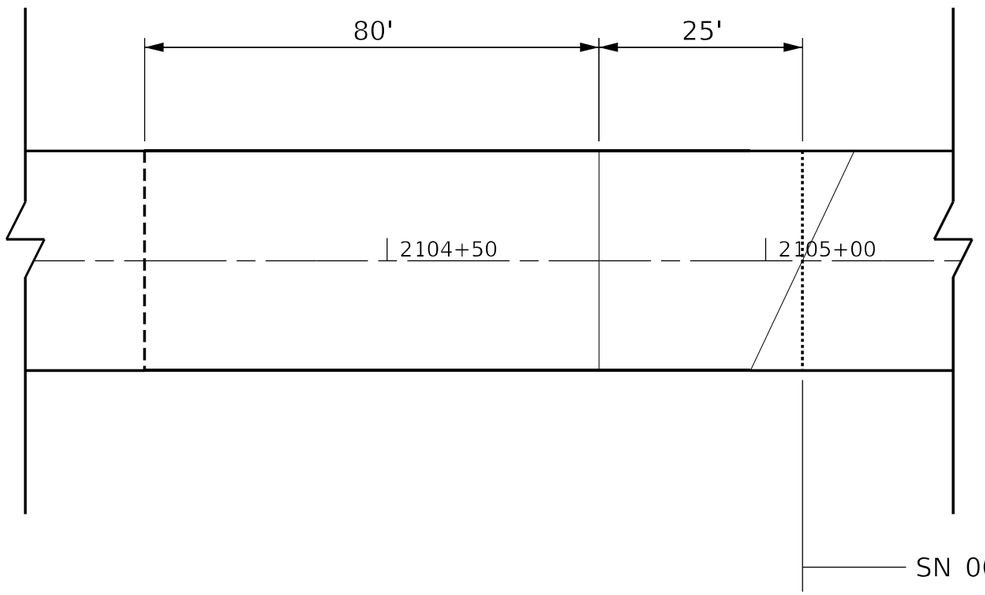


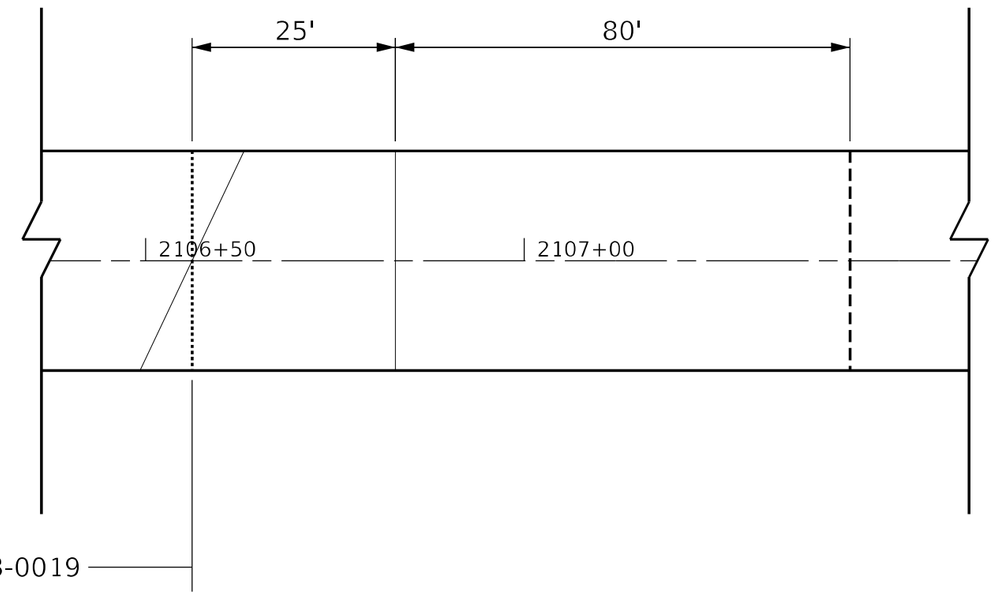


NOT TO SCALE

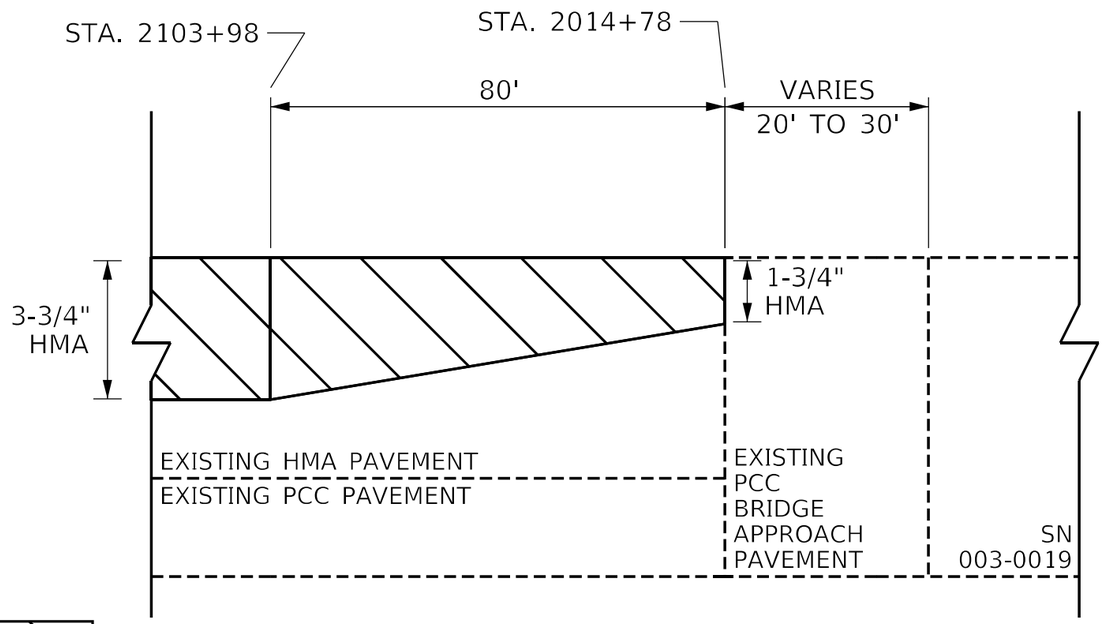


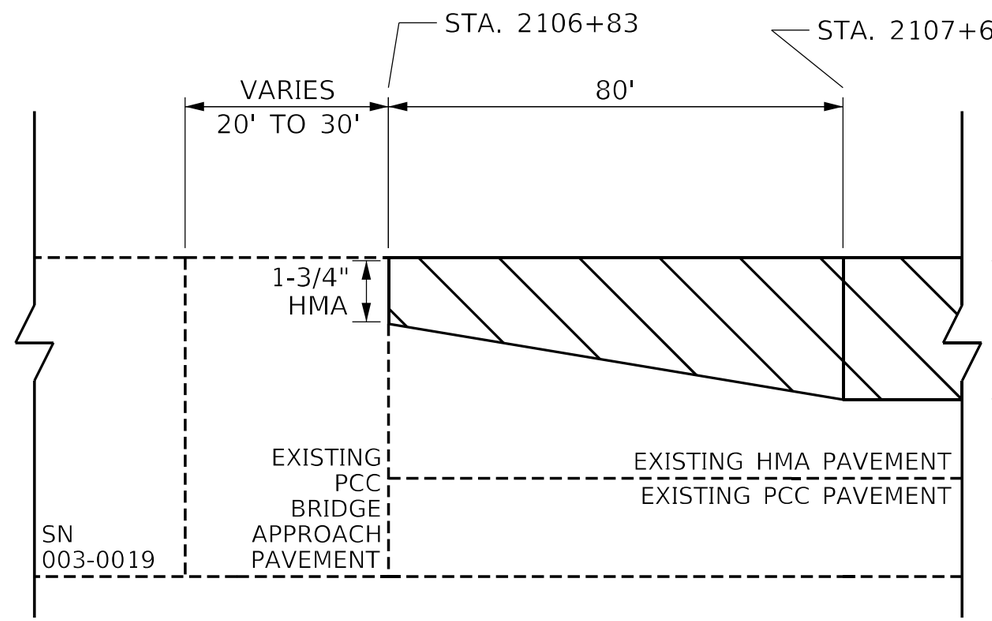


HOT-MIX ASPHALT
SURFACE REMOVAL

NOT TO SCALE

MODEL: Default
FILE NAME: pw:\\ildot-pw.bentley.com:PWIDOT\Documents\IDOT Offices\District 8\Projects\0876K46\CADData\CADsheets\0876K46-sht-bdr.dgn

| | | | |
|---|---|---|---|
| USER NAME = humphreysb | DESIGNED - | REVISED - | |
| | DRAWN - | REVISED - | |
| PLOT SCALE = 40.0000 ' / in. | CHECKED - | REVISED - | |
| PLOT DATE = 5/13/2022 | DATE - | REVISED - | |

**STATE OF ILLINOIS**
**DEPARTMENT OF TRANSPORTATION**

**BRIDGE APPROACH REMOVAL**
**DETAILS – SN 003–0019**

SCALE: NTS | SHEET 1 OF 2 SHEETS | STA. TO STA.

| **F.A. RTE. | SECTION | COUNTY | TOTAL SHEETS | SHEET NO. |
|---|---|---|---|---|
| ** | (Q-1,X-1,F-1)RS-2, Q-1VBDR-1 | BOND | 113 | 74 |
| **FAU 9832, FAS 1751 | | CONTRACT NO. 76K46 | | |
| | | ILLINOIS | FED. AID PROJECT | |

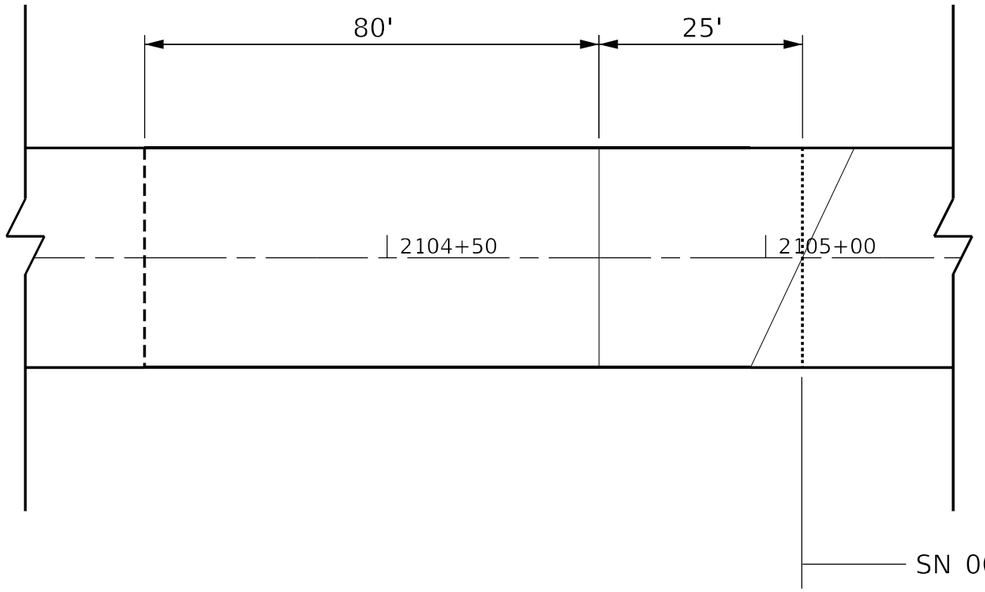


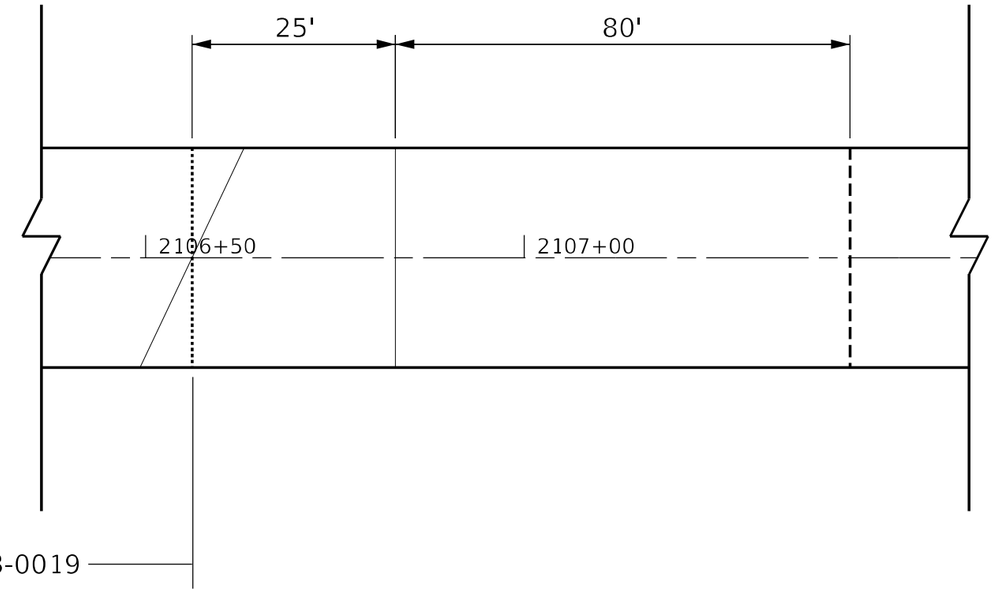


NOT TO SCALE

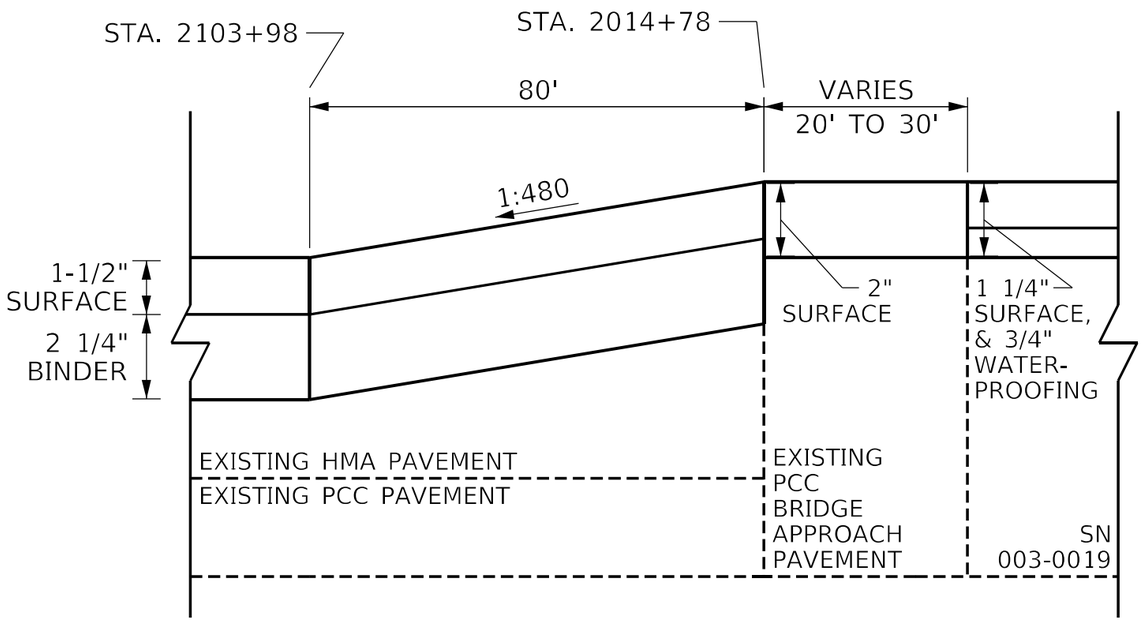


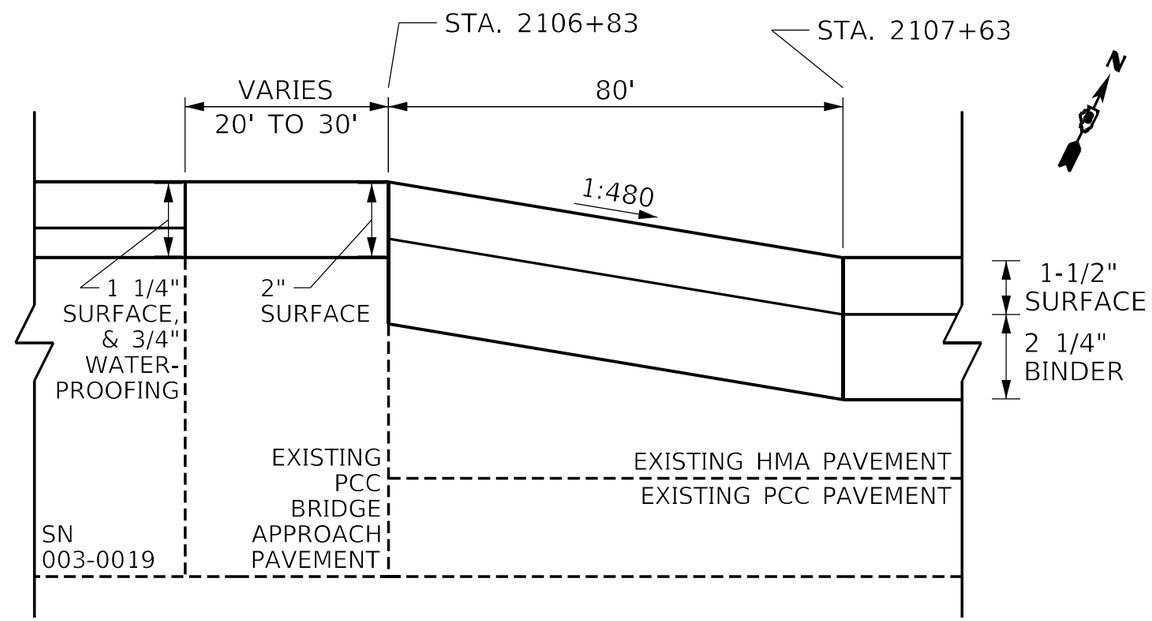


NOT TO SCALE

MODEL: Default
FILE NAME: pw:\\ildot-pw.bentley.com:PWIDOT\Documents\IDOT Offices\District 8\Projects\0876K46\CADData\CADsheets\0876K46-sht-bdx.dgn

| | | | | | | | | | |
|---|---|---|---|---|---|---|---|---|---|
| USER NAME = humphreysb | DESIGNED - | REVISED - | STATE OF ILLINOIS DEPARTMENT OF TRANSPORTATION | BRIDGE APPROACH DETAILS – SN 003–0019 | | | **F.A. RTE. | SECTION | COUNTY | TOTAL SHEETS | SHEET NO. |
| | DRAWN - | REVISED - | | | | | ** | (Q-1,X-1,F-1)RS-2, Q-1VBDR-1 | BOND | 113 | 75 |
| PLOT SCALE = 40.0000 ' / in. | CHECKED - | REVISED - | | | | | **FAU 9832, FAS 1751 | | CONTRACT NO. 76K46 | | |
| PLOT DATE = 5/13/2022 | DATE - | REVISED - | | SCALE: NTS | SHEET 2 OF 2 SHEETS | STA. TO STA. | | ILLINOIS | FED. AID PROJECT | | |

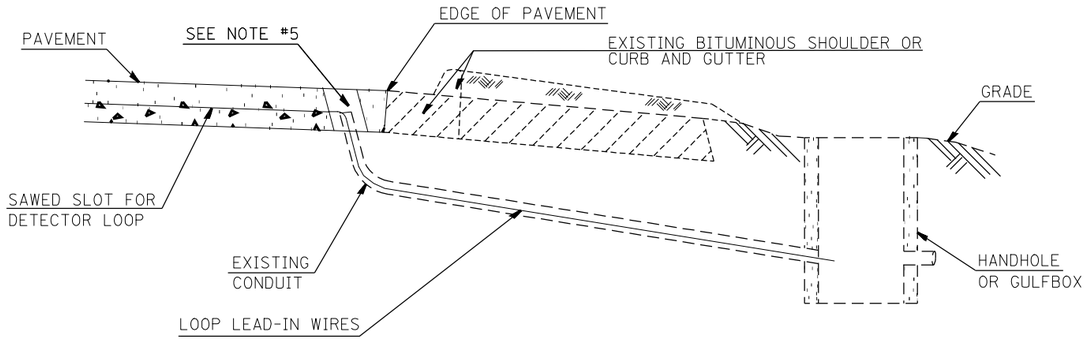


**DETAIL A**
(NO SCALE)

**INSTALLING DETECTOR LOOP WIRES IN EXISTING CONDUIT**

1. DRILL OUT PAVEMENT SEALANT AND CLEAN EXISTING CONDUIT.
2. REMOVE EXISTING DETECTOR LOOP WIRES TO HANDHOLE OR GULFBOX.
3. INSTALL NEW LOOP LEAD-IN WIRES IN EXISTING CONDUIT.
4. SPLICE NEW DETECTOR LOOP WIRES TO EXISTING LOOP LEAD-IN CABLE IN HANDHOLE OR GULFBOX.
5. FILL HOLE WITH APPROVED SEALER. PREVENT SEALER FROM ENTERING INTO CONDUIT.

NOT A PAY ITEM. THE COST OF THIS WORK SHALL BE INCLUDED IN THE PAY ITEM "DETECTOR LOOP REPLACEMENT"

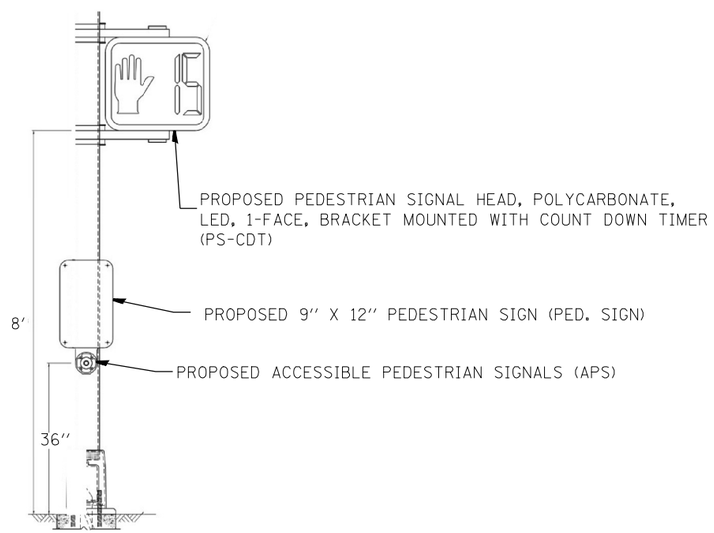


EXISTING SIGNAL POLE

## TRAFFIC SIGNALS LEGEND

EXISTING SIGNAL POST

EXISTING TRAFFIC SIGNAL MAST ARM

EXISTING HANDHOLE

EXISTING DOUBLE HANDHOLE

EXISTING DETECTOR LOOP

EXISTING CONTROLLER

EXISTING SERVICE INSTALLATION

EXISTING SIGNAL HEAD, PEDESTRIAN FOR REMOVAL

EXISTING PEDESTRIAN PUSHBUTTON DETECTOR FOR REMOVAL

EXISTING CONDUIT

EXISTING PEDESTRIAN SIGN FOR REMOVAL

PROPOSED DETECTOR LOOP

PROPOSED ACCESSIBLE PEDESTRIAN SIGNALS (APS)

PROPOSED PEDESTRIAN SIGNAL HEAD, POLYCARBONATE, LED, 1-FACE, BRACKET MOUNTED WITH COUNT DOWN TIMER (PS-CDT)

PROPOSED 9" X 12" PEDESTRIAN SIGN (PED. SIGN)

NOTES:

SEE TABLE "DETECTOR LOOP REQUIREMENTS AND CALCULATIONS" FOR LOOP SIZE AND CALCULATED NUMBER OF TURNS.
SEE "DETAIL A" FOR INSTALLING DETECTOR LOOP WIRES IN EXISTING CONDUITS.

**SCHEDULE OF QUANTITIES**

| PAY ITEM | ITEMS | UNIT | QUANTITY |
|---|---|---|---|
| 72000100 | SIGN PANEL - TYPE 1 | SQ FT | 3 |
| 88102825 | PEDESTRIAN SIGNAL HEAD, POLYCARBONATE, LED, 1-FACE, BRACKET MOUNTED WITH COUNT DOWN TIMER | EACH | 4 |
| 88600600 | DETECTOR LOOP REPLACEMENT | FOOT | 1711 |
| 89502375 | REMOVE EXISTING TRAFFIC SIGNAL EQUIPMENT | EACH | 12 |
| X8760200 | ACCESSIBLE PEDESTRIAN SIGNALS | EACH | 4 |

| DETECTOR LOOP 161 REQUIREMENTS AND CALCULATIONS FOR US 40 & IL 127 | | | | | |
|---|---|---|---|---|---|
| LOOP# | PHASE # (Φ) | LOOP SIZE (FT. X FT.) | REQUIRED # OF TURNS | CALCULATED INDUCTANCE MICROHENRIES (μH) | CALCULATED RESISTANCE OHMS (Ω) |
| 1. EB CCO | 4 | 6' x 6' | 7 | 519.81 | 3.92 |
| 2. EB LT CD | 7 | 6' x 50'(Q) | 3-6-3 | 882.58 | 3.79 |
| 3. EB THRU CD | 4 | 6' x 50'(Q) | 3-6-3 | 88.35 | 3.81 |
| 4. EB RT CD | 4 | 6' x 50'(Q) | 3-6-3 | 878.18 | 3.69 |
| 5. NB CCO | 6 | 6' x 6' | 6 | 365.98 | 3.89 |
| 6. NB LT CD | 1 | 6' x 50'(Q) | 3-6-3 | 849.58 | 3.04 |
| 7. NB THRU CD | 6 | 6' x 50'(Q) | 3-6-3 | 847.16 | 2.98 |
| 8. WB CCO | 8 | 6' x 6' | 6 | 317.58 | 1.79 |
| 9. WB LT CD | 3 | 6' x 50'(Q) | 3-6-3 | 802.50 | 1.97 |
| 10. WB THRU CD | 8 | 6' x 50'(Q) | 3-6-3 | 800.74 | 1.93 |
| 11. WB RT CD | 8 | 6' x 25'(Q) | 3-6-3 | 423.54 | 1.13 |
| 12. SB CCO | 2 | 6' x 6' | 6 | 342.66 | 2.36 |
| 13. SB LT CD | 5 | 6' x 50'(Q) | 3-6-3 | 824.50 | 2.47 |
| 14. SB THRU CD | 2 | 6' x 50'(Q) | 3-6-3 | 822.52 | 2.42 |

THE ABOVE VALUES ARE CALCULATED OF COMBINED LOOP AND LEAD-IN INDUCTANCE AND RESISTANCE. ACTUAL MEASURED VALUES SHOULD BE WITHIN +/- 20% OF THESE VALUES.

Q=QUADRAPOLE

(*) =SEE DETAIL "A"

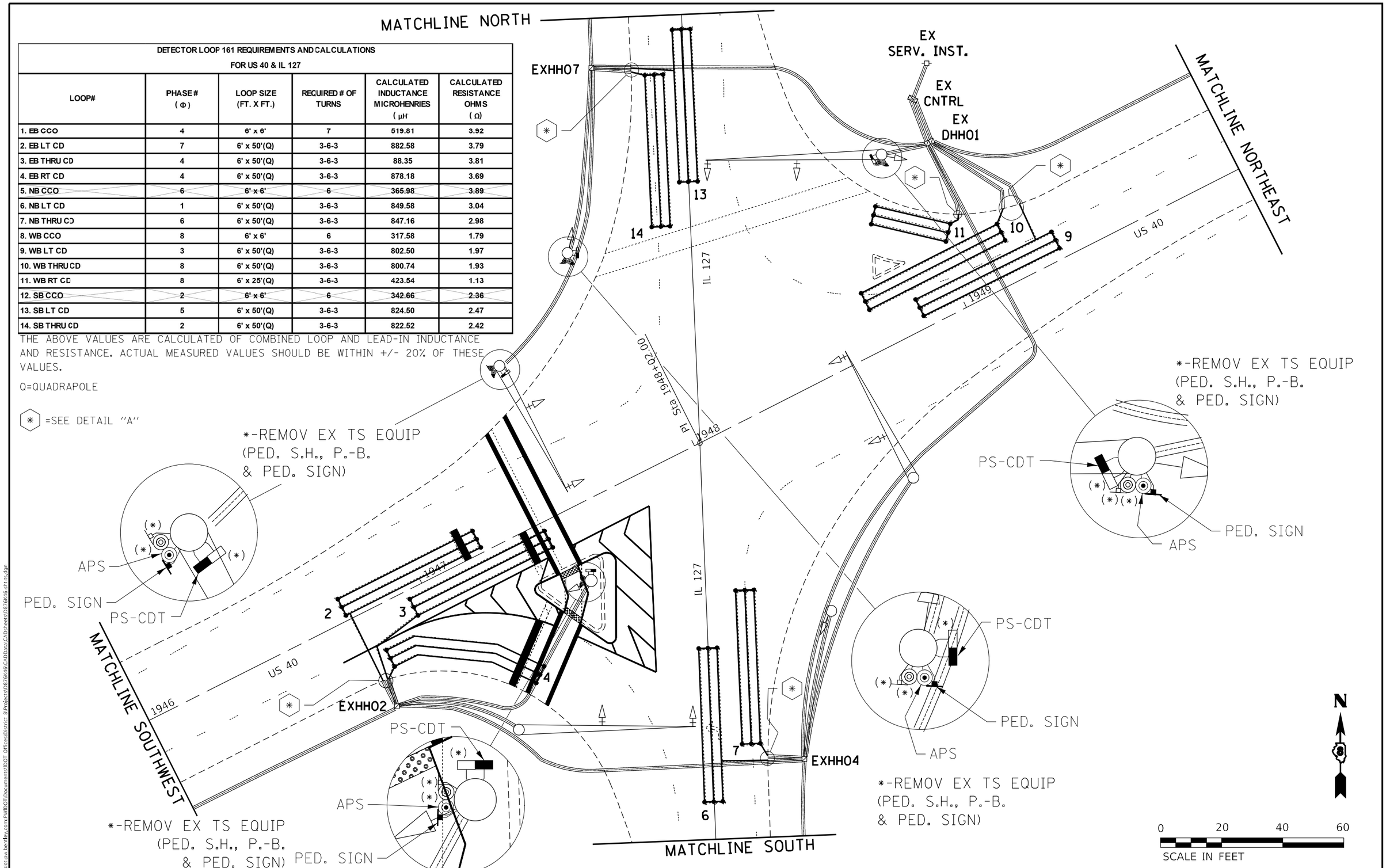


| | | | |
|---|---|---|---|
| USER NAME = humphreysb | DESIGNED - | REVISED - | STATE OF ILLINOIS DEPARTMENT OF TRANSPORTATION |
| | DRAWN - | REVISED - | |
| PLOT SCALE = 28.5560 ' / in. | CHECKED - | REVISED - | |
| PLOT DATE = 5/13/2022 | DATE - | REVISED - | |

TRAFFIC SIGNAL PLAN
US 40 AND IL 127
1 OF 2

SCALE: SHEET OF SHEETS STA. TO STA.

| RTE. | SECTION | COUNTY | TOTAL SHEETS | SHEET NO. |
|---|---|---|---|---|
| * | (Q-1,X-1,F-1)RS-2, Q-1VBDR-1 | BOND | 113 | 77 |
| *FAU 9832/FAS 1751 | | CONTRACT NO. 76K46 | | |
| | | ILLINOIS FED. AID PROJECT | | |

MODEL: Default
FILE NAME: pw:\\ildot-pw.bentley.com:PWIDOT\Documents\IDOT Offices\District 8\Projects\D876K46\CAD\data\CAD\sheets\D876K46-ph1-s.dgn

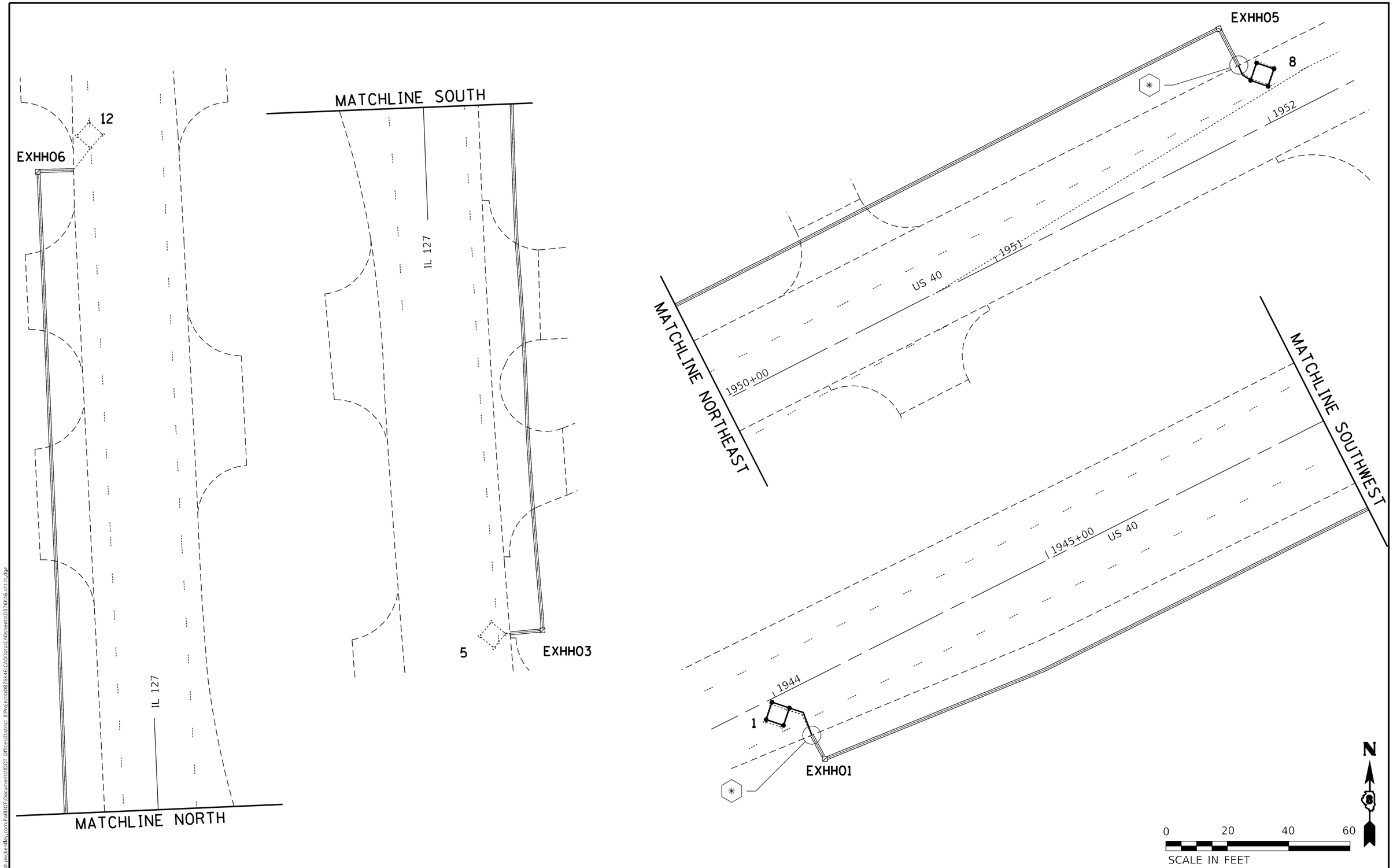


MODEL: Default
FILE NAME: pw:\\ildot-pw.bentley.com:PWIDOT\Documents\IDOT Offices\District 8\Projects\0876K46\CADData\CADsheets\0876K46-sht-ts.dgn

| | | | |
|---|---|---|---|
| USER NAME = humphreysb | DESIGNED - | REVISED - | |
| | DRAWN - | REVISED - | |
| PLOT SCALE = 28.5560 ' / in. | CHECKED - | REVISED - | |
| PLOT DATE = 5/13/2022 | DATE - | REVISED - | |

**STATE OF ILLINOIS**
**DEPARTMENT OF TRANSPORTATION**

**TRAFFIC SIGNAL PLAN**
**US 40 AND IL 127**
**2 OF 2**

SCALE: | SHEET OF SHEETS | STA. | TO STA.

| RTE. | SECTION | COUNTY | TOTAL SHEETS | SHEET NO. |
|---|---|---|---|---|
| * | (Q-1,X-1,F-1)RS-2, Q-1VBDR-1 | BOND | 113 | 78 |
| *FAU 9832/FAS 1751 | | CONTRACT NO. 76K46 | | |
| | ILLINOIS | FED. AID PROJECT | | |

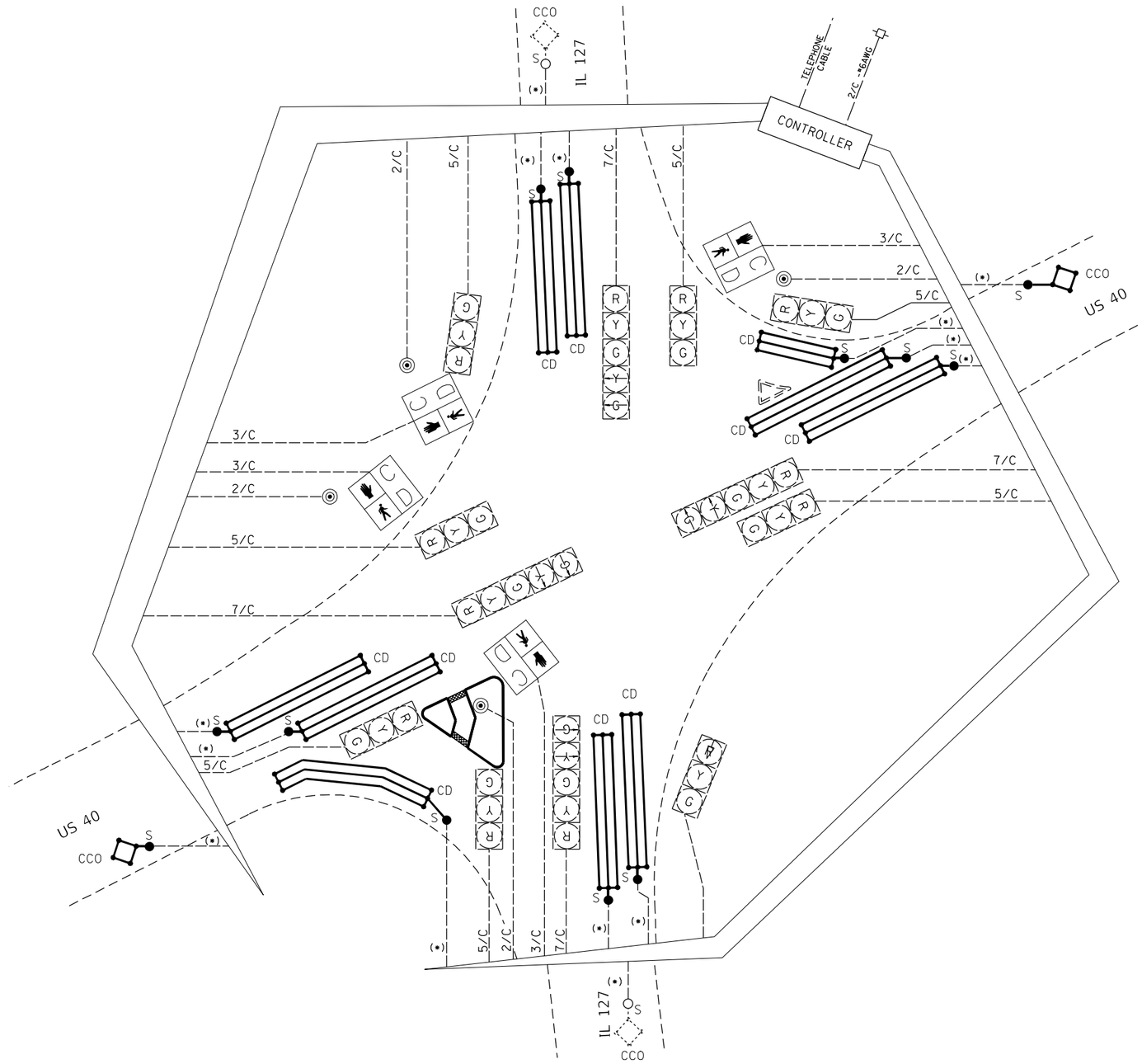


## CABLE DIAGRAM LEGEND

| | |
|---|---|
| ———— | EXISTING ELECTRIC CABLE IN CONDUIT |
| —●— | PROPOSED CABLE SPLICE |
| ------○— | EXISTING CABLE SPLICE |
| 2/C | INDICATES NUMBER OF CONDUCTORS IN CABLE |
| (•) | ELECTRIC CABLE LEAD-IN, 1 PAIR |
| CD | CALL DELAY |
| CCO | CALL CARRY OVER |
| -□- | EXISTING SERVICE INSTALLATION |
| C / D | PROPOSED PEDESTRIAN SIGNAL HEAD, POLYCARBONATE, LED, 1-FACE, BRACKET MOUNTED WITH COUNT DOWN TIMER |
| ◎ | PROPOSED ACCESSIBLE PEDESTRIAN SIGNALS (APS) |

MODEL: Default
FILE NAME: pw:\\ildot-pw.bentley.com:PWIDOT\Documents\IDOT Offices\District 8\Projects\D876K46\CADData\CADsheets\D876K46-sht25.dgn

| | | | |
|---|---|---|---|
| USER NAME = humphreysb | DESIGNED - | REVISED - | |
| | DRAWN - | REVISED - | |
| PLOT SCALE = 28.5560 ' / in. | CHECKED - | REVISED - | |
| PLOT DATE = 5/13/2022 | DATE - | REVISED - | |

**STATE OF ILLINOIS**
**DEPARTMENT OF TRANSPORTATION**

**CABLE DIAGRAM**
**US 40 AND IL 127**

SCALE: | SHEET OF SHEETS | STA. TO STA.

| RTE. | SECTION | COUNTY | TOTAL SHEETS | SHEET NO. |
|---|---|---|---|---|
| " | (Q-1,X-1,F-1)RS-2, Q-1VBDR-1 | BOND | 113 | 79 |
| "FAU 9832/FAS 1751 | | CONTRACT NO. 76K46 | | |
| | | ILLINOIS FED. AID PROJECT | | |

Bench Mark: National Geodetic Survey P-113: Monument on concrete base ±66' southeast of intersection of CSX and BNSF tracks. Elev. 553.194 (NGVD 29), 552.78 (NAVD 88). Elevations on plans are in NGVD 29.

Existing Structure: SN 003-0019 was originally constructed in 1942 as a 5 span wide flange beam bridge, 280.000' back-to-back of abutment, concrete deck width 33.4' out-to-out. The superstructure was removed and reconstructed in 1988 with continuous steel beams and a concrete deck, 35'-2" out-to-out. The bridge is supported by stub abutments on piles and concrete wall piers on pile cap footings.

Salvage: None.

## DESIGN STRESSES

Existing Structure (1988 Construction)

f'c = 3,500 psi
fy = 60,000 psi (Reinforcement)
fy = 50,000 psi (M223 Grade 50)
fy = 36,000 psi (M-183)

New Construction

fy = 60,000 psi (Reinforcement)
fy = 50,000 psi (M270 Grade 50)

## DESIGN SPECIFICATIONS

2002 AASHTO Standard Specifications for Highway Bridges

LOADING HS20-44

## INDEX OF SHEETS



## SCOPE OF WORK

To be completed under staged construction.

1. Repair bridge deck.
2. Seal joint between approach parapets and approach shoulders.
3. Repair abutment backwalls.
4. Reconstruct deck joints at each abutment with preformed joint strip seal.
5. Install new waterproofing and HMA overlay.
6. Clean and paint structural steel at designated locations.
7. Repair west abutment approach drain on north side.
8. Upgrade & reconnect guardrail transitions (See Roadway Plans).
9. Re-establish aggregate shoulders at approach ends at all four (4) quadrants (See Roadway Plans).

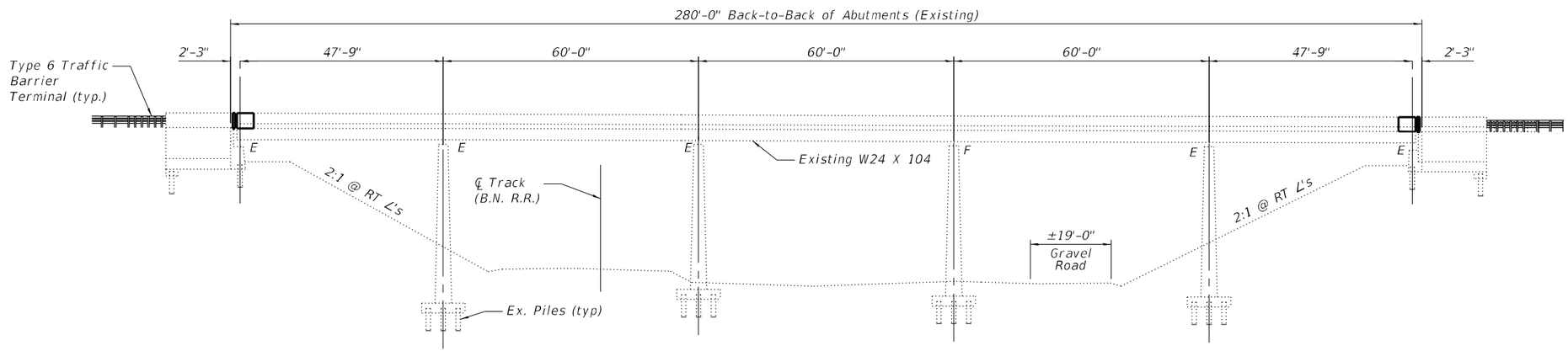


ELEVATION

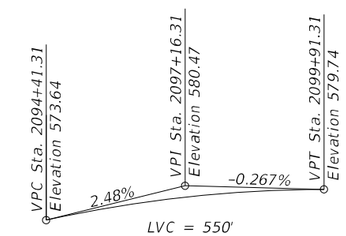


PROFILE GRADE

(Along ℄ US 40)

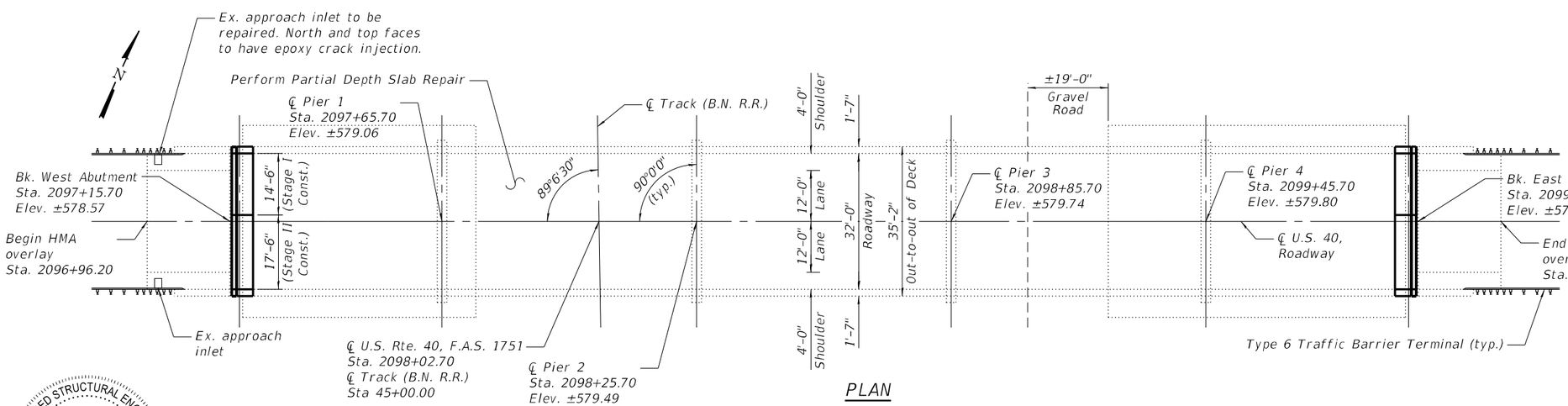


PLAN

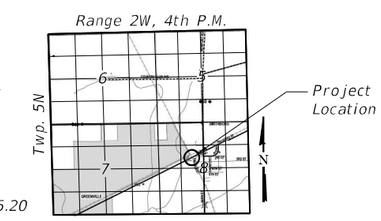


LOCATION SKETCH

LICENSED STRUCTURAL ENGINEER
MOSHE L. COHEN
081-008104
STATE OF ILLINOIS

Signed: Moshe L Cohen
Dated: 2022-12-02
Expires: November 30, 2024

GENERAL PLAN & ELEVATION
US 40 OVER B&N RAILROAD
F.A.U. 9832 - SEC. (Q-1,X-1,F-1)RS-2
BOND COUNTY
STATION 2098+55.70
STRUCTURE NO. 003-0018

## GENERAL NOTES

1. Reinforcement bars designated (E) shall be epoxy coated.
2. All heavy or loose rust, loose mill scale, and other loose or potentially detrimental foreign material shall be removed from the surfaces in contact with concrete. Tightly adhered paint may remain unless otherwise noted. Removal shall be accomplished by methods that will not damage the steel and the cost will be included in the pay item covering removal of the existing concrete.
3. Plan dimensions and details relative to existing plans are subject to nominal construction variations. The Contactor shall field verify existing dimensions and details affecting new construction and make necessary approved adjustments prior to construction or ordering of materials. Such variations shall not be cause for additional compensation for a change in scope of the work, however, the Contractor will be paid for the quantity actually furnished at the unit price bid for the work.
4. Joint openings shall be adjusted according to Article 520.04 of the Standard Specifications at ambient temperature other than 50°F.
5. Cleaning and painting of the existing structure steel shall be as specified in the special provisions for "Cleaning and Painting Existing Steel Structures". All beams, bearings and other structural steel within 5 ft. (measured along the beam), unless noted otherwise, of either side of the deck joints shall be cleaned per Near White Blast Cleaning - SSPC-SP-10.
6. The designated areas cleaned per Near White Blast Cleaning - SSPC-SP-10 shall be painted according to the requirements of Paint System 1 - OZ/E/U.
7. The color of the final finish coat for all steel surfaces shall be Blue, Munsell NO. 10B 3/6.
8. Containment and disposal of non-lead paint cleaning residues shall be as specified in special provisions for "Containment and Disposal of Non-Lead Paint Cleaning Residues".
9. The painting Contractor shall be SSPC-QP1 certified for this project and shall maintain certification throughout the duration of the project.
10. Quantity of Deck Slab Repair (Partial) shown on the plans is an estimate based on existing conditions at the time of the estimate. Final quantities shall be determined by the Engineer in the field.
11. All exposed concrete edges shall have a standard 3/4" chamfer unless noted otherwise.

## TOTAL BILL OF MATERIAL

| ITEM | UNIT | SUPER | SUB | TOTAL |
|---|---|---|---|---|
| Hot-Mix Asphalt Surface Course, IL-9.5FG, Mix "D", N70 | Ton | 71 | | 71 |
| Concrete Removal | Cu. Yd. | 7.7 | 4.4 | 12.1 |
| Concrete Structures | Cu. Yd. | | 4.4 | 4.4 |
| Concrete Superstructure | Cu. Yd. | 7.7 | | 7.7 |
| Reinforcement Bars, Epoxy Coated | Pound | 1,420 | 320 | 1,740 |
| Bar Splicers | Each | 28 | 8 | 36 |
| Preformed Joint Strip Seal | Foot | 68 | | 68 |
| Epoxy Crack Injection | Foot | 5 | | 5 |
| Replace Joint Filler | Foot | 56 | | 56 |
| Containment and Disposal of non-lead Paint Cleaning Residues No. 1 | L. Sum | 1 | | 1 |
| Cleaning and Painting Steel Bridge No. 1 | L. Sum | 1 | | 1 |
| Cleaning Existing Inlets | Each | 1 | | 1 |
| Deck Slab Repair (Partial) | Sq. Yd. | 20 | | 20 |
| Waterproofing Membrane System | Sq. Yd. | 961 | | 961 |

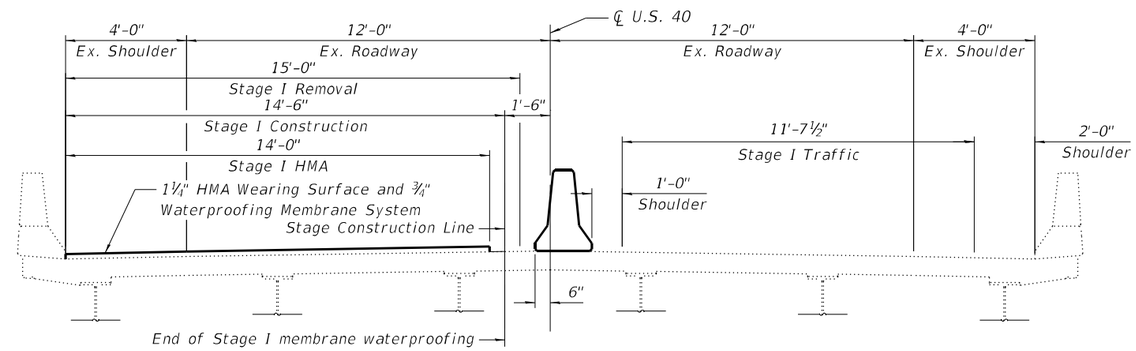


## STAGE 1 - TYPICAL SECTION

(Looking Upstation)

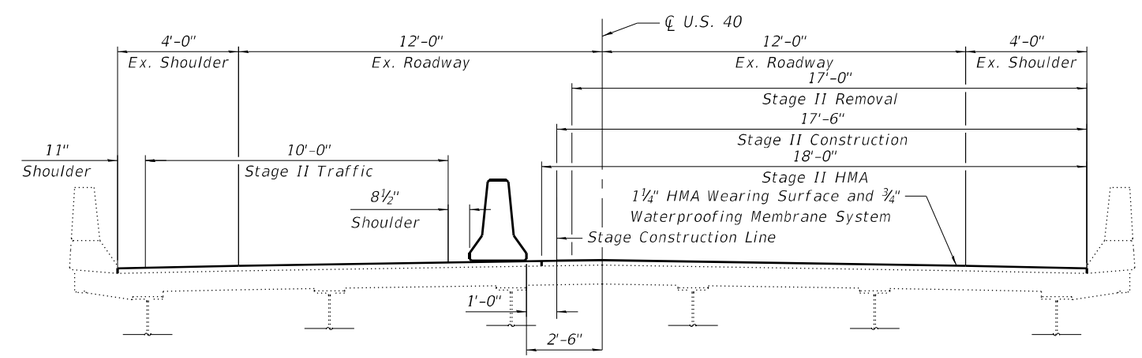


## STAGE - 2 TYPICAL SECTION

(Looking Upstation)

MODEL: Default
FILE NAME: P:\19-1141.01 IDOT 003-0018 003-0019 Rehabs\0_IDOT\Structures\003-0018\0030018-76K46-002-General Data.dgn

Kaskaskia Engineering Group, LLC
PROPRIETORSHIP/CORPORATION NO. 184.001773
Illinois Professional Design Firm
Professional Engineering Group
LICENSE NO. 20-3880101
200 E. Main St., Suite 100
Belleville, Illinois 62220
618.233.5677 phone
618.233.5677 fax
www.kaskaskiaeng.com

| | | | |
|---|---|---|---|
| USER NAME = | DESIGNED - MLC | REVISED - | |
| | CHECKED - JW | REVISED - | |
| PLOT SCALE = | DRAWN - MLC | REVISED - | |
| PLOT DATE = | CHECKED - JW | REVISED - | |

**STATE OF ILLINOIS**
**DEPARTMENT OF TRANSPORTATION**

**GENERAL DATA**
**STRUCTURE NO. 003-0018**

SHEET 2 OF 16 SHEETS

| F.A.S. RTE. | SECTION | COUNTY | TOTAL SHEETS | SHEET NO. |
|---|---|---|---|---|
| 1751 | (Q-1, X-1, F-1)RS-2, Q-1VBDR-1 | BOND | 113 | 81 |

CONTRACT NO. 76K46

ILLINOIS FED. AID PROJECT

05/12/22 3:19:42 PM

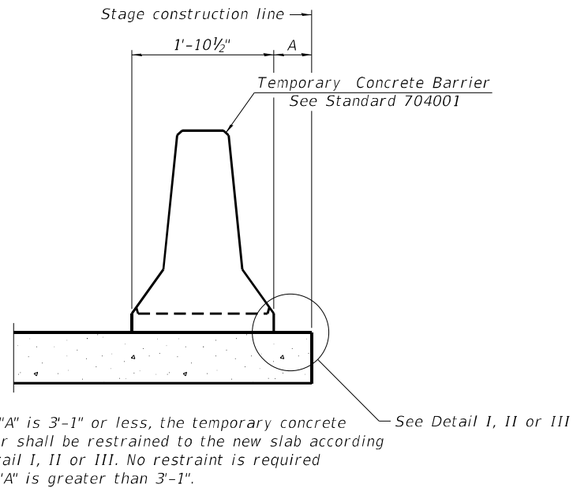


When "A" is 3'-1" or less, the temporary concrete barrier shall be restrained to the new slab according to Detail I, II or III. No restraint is required when "A" is greater than 3'-1".

NEW SLAB OR NEW DECK BEAM

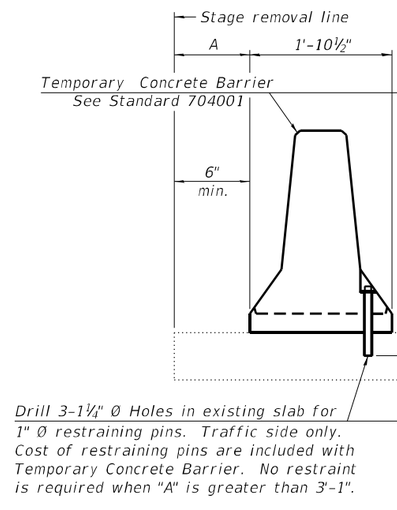


Drill 3-1¼" Ø Holes in existing slab for 1" Ø restraining pins. Traffic side only. Cost of restraining pins are included with Temporary Concrete Barrier. No restraint is required when "A" is greater than 3'-1".

EXISTING SLAB

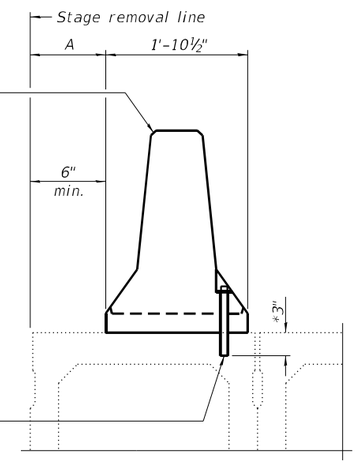


* When hot-mix asphalt wearng surface is present, embedment shall be 3" plus the wearing surface depth.

EXISTING DECK BEAM

## SECTIONS THRU SLAB OR DECK BEAM

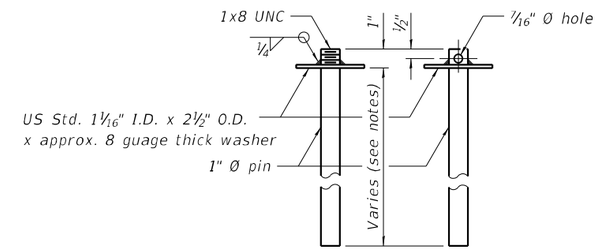


## RESTRAINING PIN

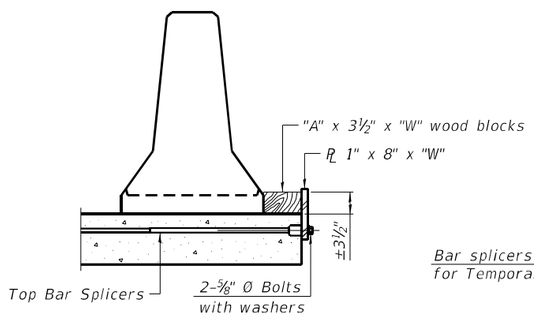


## DETAIL I

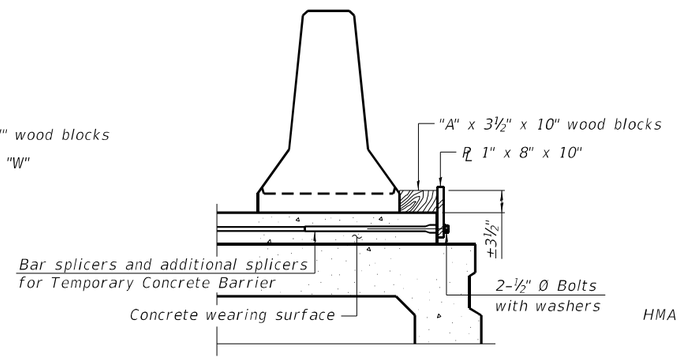


## DETAIL II

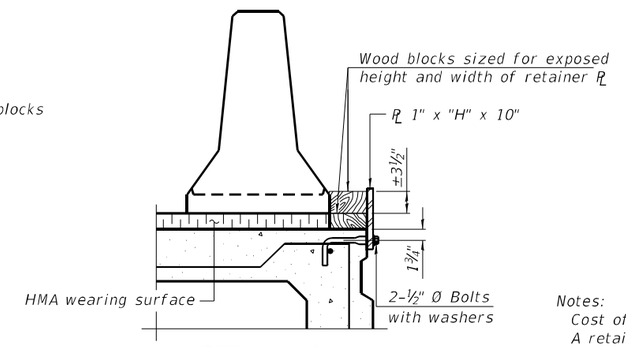


## DETAIL III

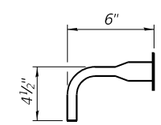


## BAR SPLICER FOR #4 BAR - DETAIL III

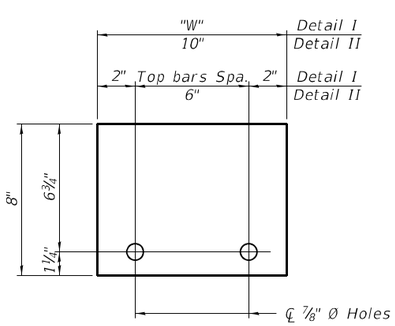


## STEEL RETAINER PL 1" x 8" x "W"

(Detail I and II)

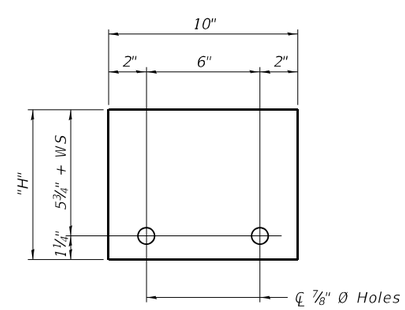


## STEEL RETAINER PL 1" x "H" x 10"

(Detail III)

Notes:

Cost of retainer assembly is included with Temporary Concrete Barrier.

A retainer assembly shall be located at the approximate ℄ of each temporary concrete barrier.

The retainer plate shall not be removed until the concrete on the adjacent stage is ready to be poured. For Detail III applications the retainer plate shall not be removed until just prior to placing the adjacent beam.

When the 'A' dimension is less than 1½", the wood block shall be omitted and the barrier shall be placed in direct contact with the steel retainer plate. For deck beam applications the minimum required 'A' distance is 6" to accommodate the shear key clamping device.

Detail I - Installation for a new bridge deck or bridge slab.

Detail II - Installation for a new deck beam with an initial concrete wearing surface. Additional bar splicers shall be provided at 6'-0" centers and paired with the bar splicers of the concrete wearing surface reinforcement to accommodate the installation of the retainer assemblies. The cost of the additional bar splicers is included with the concrete wearing surface.

Detail III - Installation for a new deck beam with no initial wearing surface or with an initial hot-mix asphalt (HMA) wearing surface present. The deck beam directly beneath the temporary concrete barrier shall be fabricated with bar splicer inserts in the side of the beam, as detailed, to accommodate the installation of the retainer assemblies. A pair of bar splicers, 6" apart, shall be placed at 6'-0" centers along the length of the beam. The cost of the bar splicers is included with the deck beam.

R-27

8-11-2017

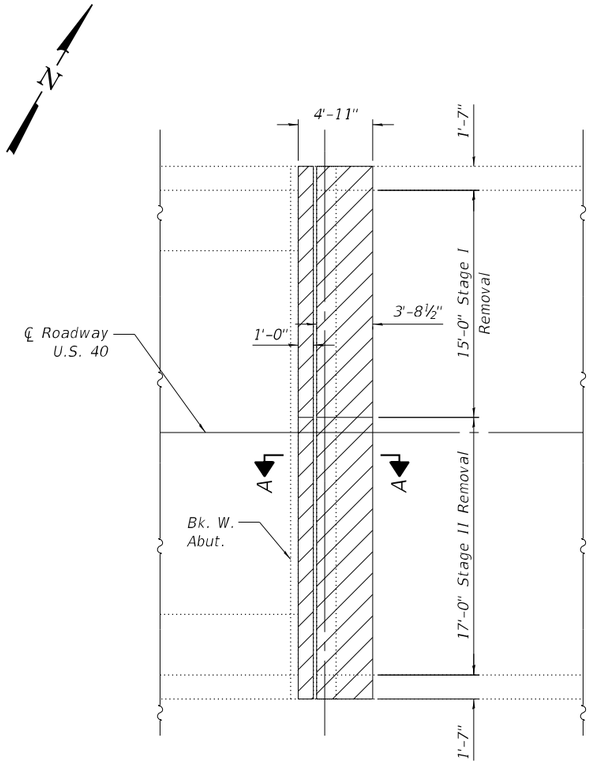


## PLAN
(West Abutment - Showing Concrete Removal)

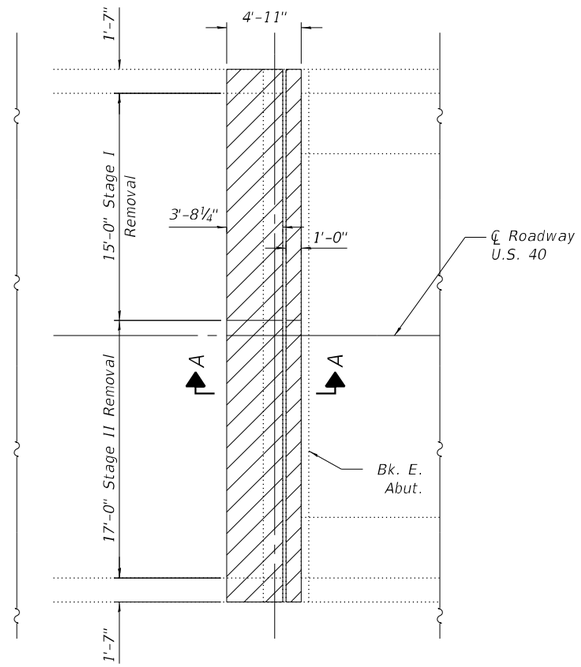


## PLAN
(East Abutment - Showing Concrete Removal)

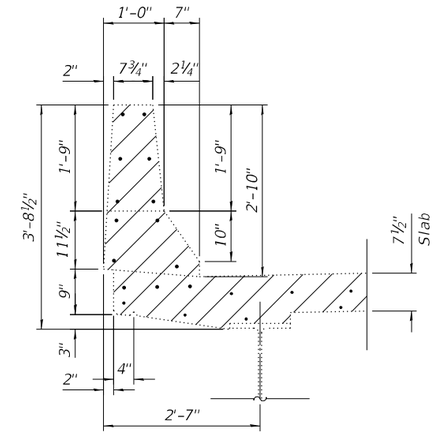


## SECTION THRU PARAPET

## BILL OF MATERIAL

| Item | Unit | Total |
|---|---|---|
| Concrete Removal | Cu. Yd. | 7.7 |
| | | |

Notes:

The Contractor shall use extreme care during concrete removal so as not to damage the existing steel beams. Any steel damaged during concrete removal operations shall be repaired at the Contractor's expense.

Removal of existing expansion joint and associated material shall not be paid for separately, but shall be included in the cost of Concrete Removal.

Existing reinforcement bars extending into the removal area shall be cleaned, straightened and incorporated into new construction. Any reinforcement bars that are damaged during concrete removal operations shall be replaced at the Contractor's expense.

Stud shear connectors damaged during concrete removal operations shall be removed and replaced per Section 505 of the Standard Specifications at the Contractor's expense.

Indicates Concrete Removal

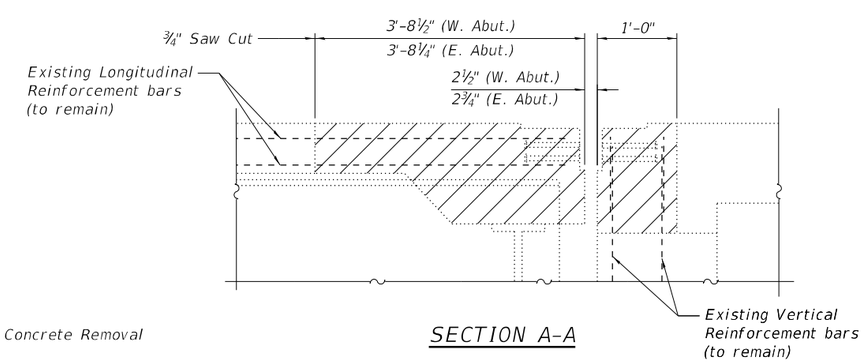


## SECTION A-A

MODEL: Default
FILE NAME: P:\19-1141.01 IDOT 003-0018 003-0019 Rehabs\0_IDOT\Structures\003-0018\0030018-76K46-004-Superstructure Concrete Removal.dgn
05/12/22 3:19:45 PM

Kaskaskia Engineering Group, LLC
PROFESSIONAL DESIGN FIRM
Illinois Professional Design Firm
Professional Engineering Group
200 E. Main St., Suite 100
Belleville, Illinois 62220
618.233.5877 phone
618.233.5877 fax
www.kaskaskiaeng.com
LICENSE NO.
184.001773
EXPIRES
25.500000

| | | | |
|---|---|---|---|
| USER NAME = | DESIGNED - MLC | REVISED - | |
| | CHECKED - JW | REVISED - | |
| PLOT SCALE = | DRAWN - MLC | REVISED - | |
| PLOT DATE = | CHECKED - JW | REVISED - | |

**STATE OF ILLINOIS**
**DEPARTMENT OF TRANSPORTATION**

**CONCRETE REMOVAL DETAILS**
**STRUCTURE NO. 003-0018**

SHEET 4 OF 16 SHEETS

| F.A.S. RTE. | SECTION | COUNTY | TOTAL SHEETS | SHEET NO. |
|---|---|---|---|---|
| 1751 | (Q-1, X-1, F-1)RS-2, Q-1VBDR-1 | BOND | 113 | 83 |
| | | CONTRACT NO. 76K46 | | |
| | ILLINOIS | FED. AID PROJECT | | |

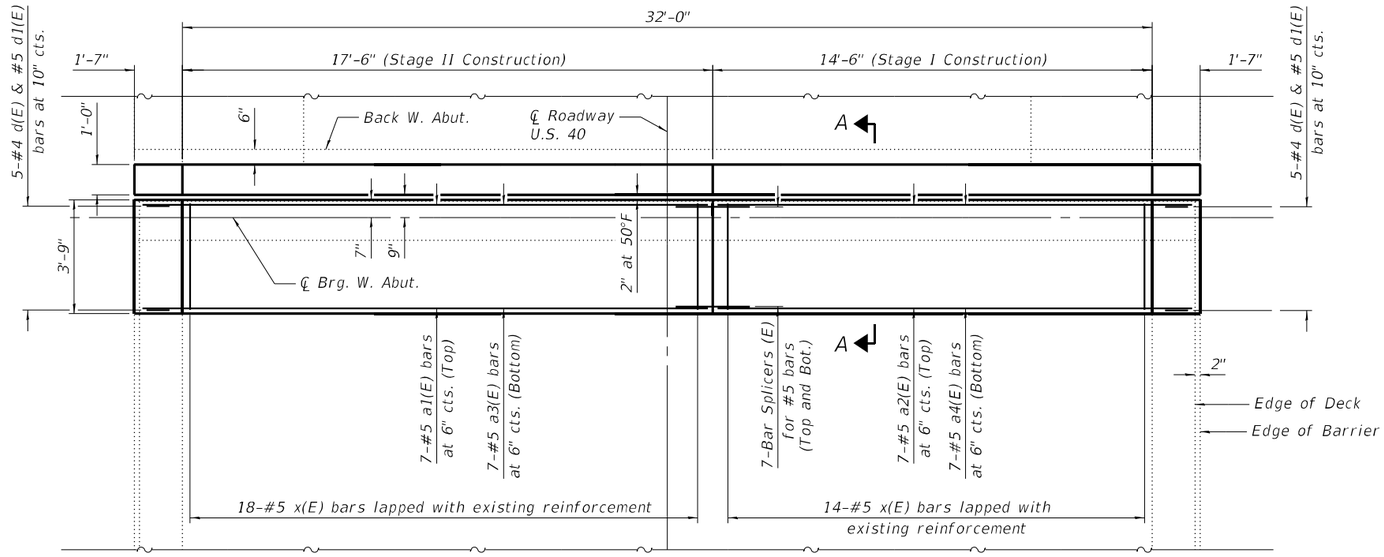


## PLAN

(Showing West Abutment)

## MINIMUM BAR LAP

#5 bar = 3'-6"

Notes:
See Sheet 6 of 16 for Section A-A.

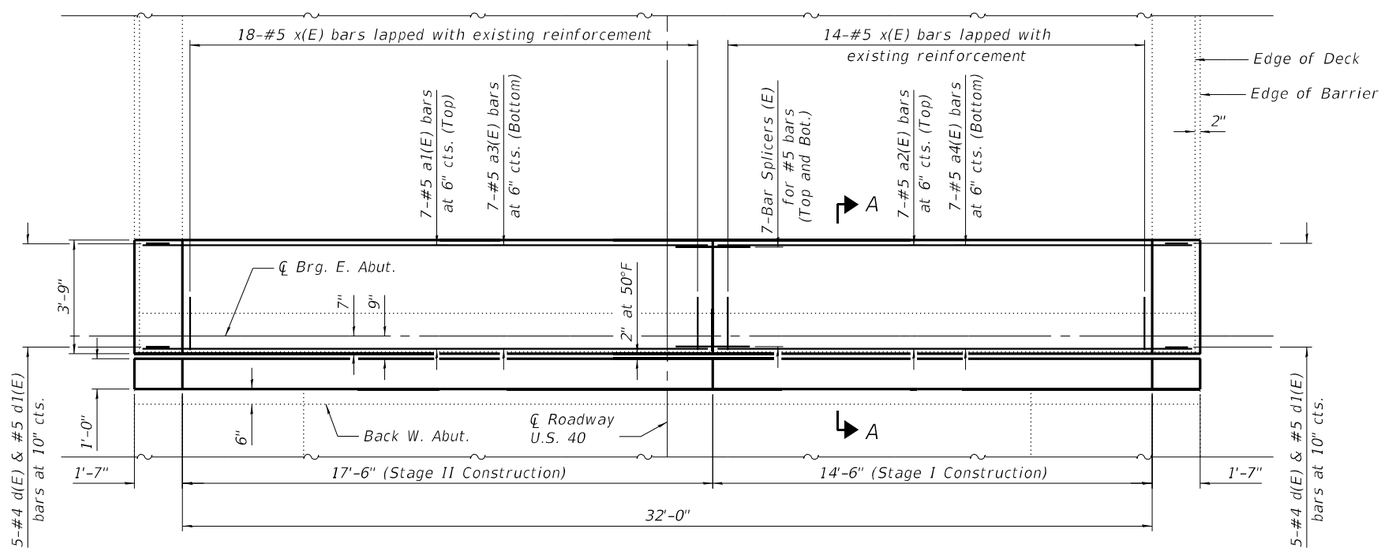


## PLAN

(Showing East Abutment)

MODEL: Default
FILE NAME: P:\19-1141.01 IDOT 003-0018 003-0019 Rehabs\0_IDOT\Structures\003-0018\0030018-76K46-005-Superstructure Plan.dgn

Kaskaskia Engineering Group, LLC
PROFESSIONAL DESIGN FIRM
Illinois Professional Design Firm
Professional Engineering Group
LICENSE No. 184.001773
20-3880566
200 E. Main St., Suite 100
Belleville, Illinois 62220
618.233.5677 phone
618.233.5677 fax
www.kaskaskiaeng.com

| | | | |
|---|---|---|---|
| USER NAME = | DESIGNED - MLC | REVISED - | |
| | CHECKED - JW | REVISED - | |
| PLOT SCALE = | DRAWN - MLC | REVISED - | |
| PLOT DATE = | CHECKED - JW | REVISED - | |

**STATE OF ILLINOIS**
**DEPARTMENT OF TRANSPORTATION**

**SUPERSTRUCTURE**
**STRUCTURE NO. 003-0018**

SHEET 5 OF 16 SHEETS

| F.A.S. RTE. | SECTION | COUNTY | TOTAL SHEETS | SHEET NO. |
|---|---|---|---|---|
| 1751 | (Q-1, X-1, F-1)RS-2, Q-1VBDR-1 | BOND | 113 | 84 |

CONTRACT NO. 76K46

ILLINOIS FED. AID PROJECT

05/12/22 3:19:46 PM

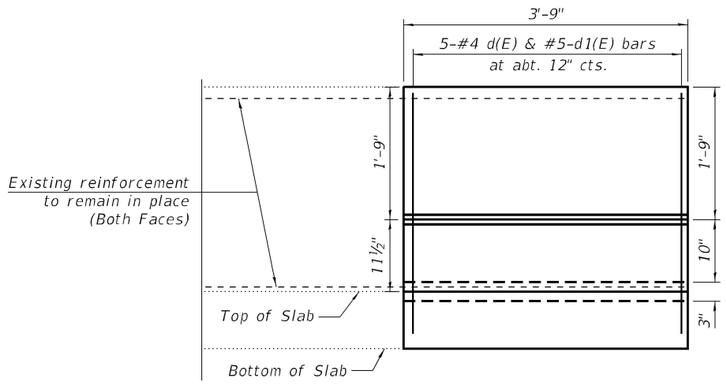


## Outside Elevation

(South Parapet - East Abutment shown, others similar)

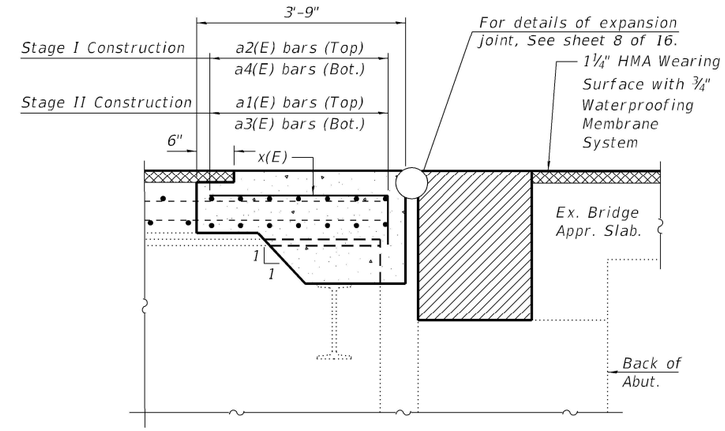


## SECTION A-A

(at right angle)

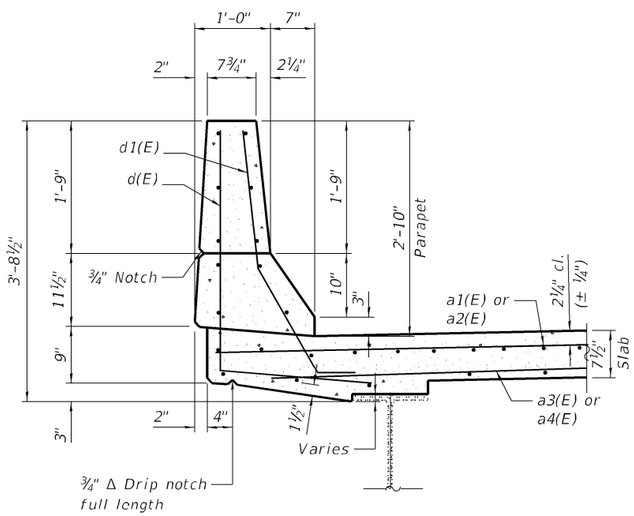


## SECTION THRU PARAPET

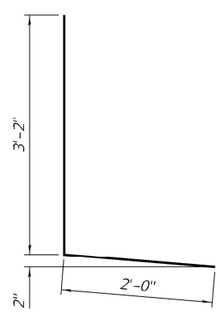


## BAR d(E)

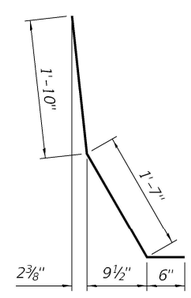


## BAR d1(E)

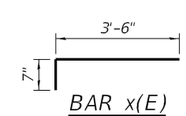


## BAR x(E)

## BILL OF MATERIAL

| Bar | No. | Size | Length | Shape |
|---|---|---|---|---|
| a1(E) | 14 | #5 | 18'-9" | |
| a2(E) | 14 | #5 | 15'-9" | |
| a3(E) | 14 | #5 | 18'-3" | |
| a4(E) | 14 | #5 | 15'-3" | |
| | | | | |
| d(E) | 20 | #4 | 5'-2" | |
| d1(E) | 20 | #5 | 3'-11" | |
| | | | | |
| x(E) | 64 | #5 | 4'-1" | |
| | | | | |
| Concrete Superstructure | | | Cu. Yd. | 7.7 |
| Reinforcement Bars, Epoxy Coated | | | Pound | 1420 |
| Hot-Mix Asphalt Surface Course, IL-9.5FG, Mix "D", N70 | | | Ton | 71 |

MODEL: Default
FILE NAME: P:\19-1141.01 IDOT 003-0018 003-0019 Rehab\0_IDOT\Structures\003-0018\030018-76K46-006-Superstructure Details.dgn
05/12/22 3:19:47 PM


Kaskaskia Engineering Group, LLC
PROFESSIONAL REGISTRATION
Illinois Professional Design Firm
Professional Engineering Group
LICENSE NO.
184.001751
20-5000586
300 E. Main St., Suite 100
Belleville, Illinois 62220
618.233.5977 phone
618.233.5977 fax
www.kaskaskiaeng.com


| | | | |
|---|---|---|---|
| USER NAME = | DESIGNED - MLC | REVISED - | |
| | CHECKED - JW | REVISED - | |
| PLOT SCALE = | DRAWN - MLC | REVISED - | |
| PLOT DATE = | CHECKED - JW | REVISED - | |

**STATE OF ILLINOIS**
**DEPARTMENT OF TRANSPORTATION**

**SUPERSTRUCTURE DETAILS**
**STRUCTURE NO. 003-0018**

SHEET 6 OF 16 SHEETS

| F.A.S. RTE. | SECTION | COUNTY | TOTAL SHEETS | SHEET NO. |
|---|---|---|---|---|
| 1751 | (Q-1, X-1, F-1)RS-2, Q-1VBDR-1 | BOND | 113 | 85 |
| | | CONTRACT NO. 76K46 | | |
| | ILLINOIS | FED. AID PROJECT | | |

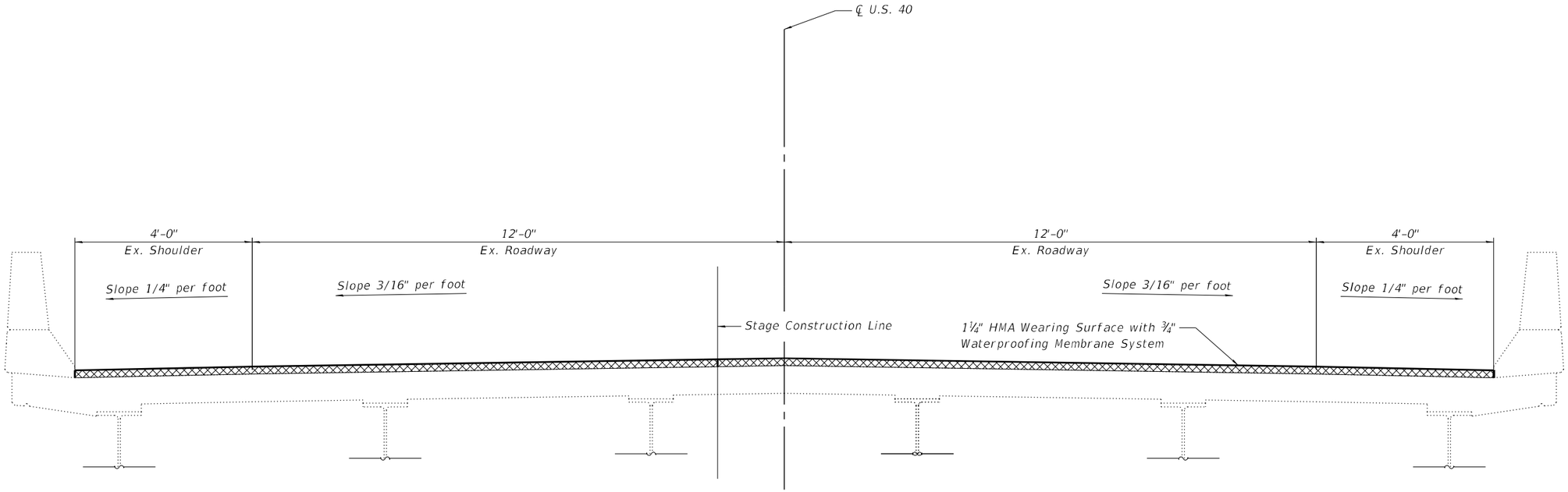


## SUPERSTRUCTURE TYPICAL SECTION

(Looking Upstation)

Notes:
See Roadway Plans for additional wearing surface details.

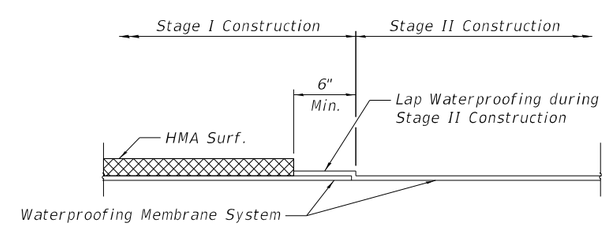


## WATERPROOFING TREATMENT AT STAGE CONSTRUCTION

MODEL: Default
FILE NAME: P:\19-1141.01 IDOT 003-0018 003-0019 Rehabs\0_IDOT\Structures\003-0018\0030018-76K46-007-Superstructure Typical Section.dgn
05/12/22 3:19:48 PM

Kaskaskia Engineering Group, LLC
PROFESSIONAL DESIGN FIRM: Illinois Professional Design Firm: Professional Engineering Group
LICENSE NO. 184.001773 20-5000166

| | | | |
|---|---|---|---|
| USER NAME = | DESIGNED - MLC | REVISED - | |
| | CHECKED - JW | REVISED - | |
| PLOT SCALE = | DRAWN - MLC | REVISED - | |
| PLOT DATE = | CHECKED - JW | REVISED - | |

**STATE OF ILLINOIS**
**DEPARTMENT OF TRANSPORTATION**

**SUPERSTRUCTURE TYPICAL SECTION**
**STRUCTURE NO. 003-0018**

SHEET 7 OF 16 SHEETS

| F.A.S. RTE. | SECTION | COUNTY | TOTAL SHEETS | SHEET NO. |
|---|---|---|---|---|
| 1751 | (Q-1, X-1, F-1)RS-2, Q-1VBDR-1 | BOND | 113 | 86 |
| | | CONTRACT NO. 76K46 | | |
| | ILLINOIS | FED. AID PROJECT | | |

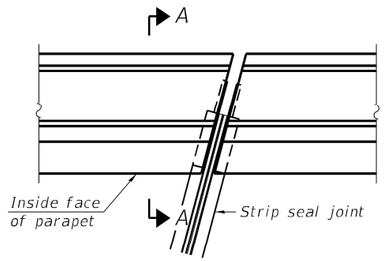


PLAN

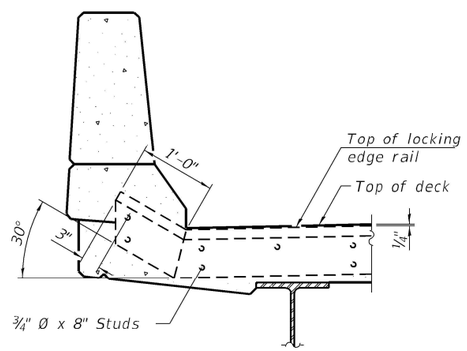


SECTION A-A

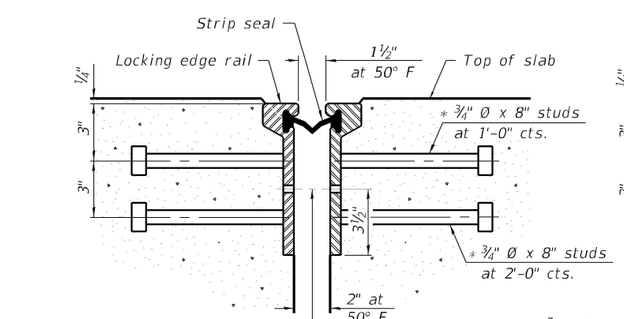


SECTION THRU
ROLLED RAIL JOINT

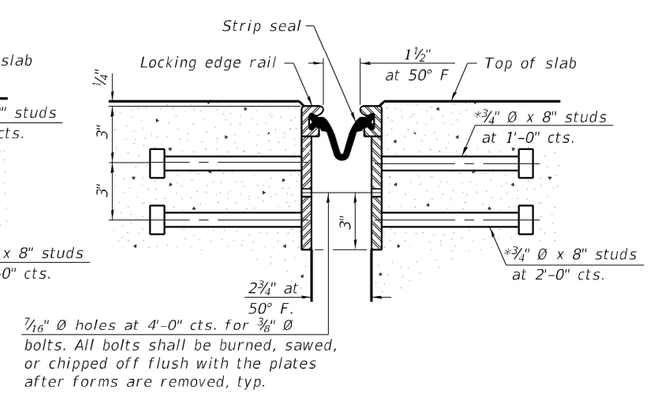


SECTION THRU
WELDED RAIL JOINT

* Granular or solid flux filled headed studs conforming to Article 1006.32 of the Std. Specs., automatically end welded.

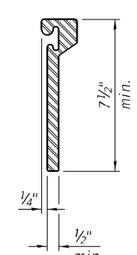


ROLLED
EXTRUDED RAIL

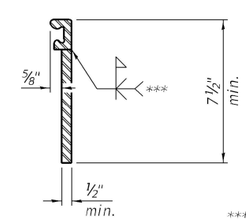


WELDED RAIL

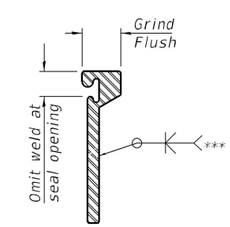


*** Back gouge not required if complete joint penetration is verified by mock-up.

LOCKING EDGE
RAIL SPLICE

The inside of the locking edge rail groove shall be free of weld residue.

Rolled rail shown, welded rail similar.

LOCKING EDGE RAILS

Notes:

The strip seal shall be made continuous and shall have a minimum thickness of 1/4". The configuration of the strip seal shall match the configuration of the Locking Edge Rails. Open or "webbed" strip seal gland configurations are not permitted. The gland shall be sized for a maximum rated movement of 4 inches.

The Locking Edge Rails depicted are conceptual only, except for the minimum dimensions shown. The actual configuration of the Locking Edge Rails and matching strip seal may vary from manufacturer to manufacturer. Flanged edge rails will not be allowed. Locking Edge Rails may be spliced at slope discontinuities.

The manufacturer's recommended installation methods shall be followed.

The joint opening and deck dimensions detailed on the superstructure are based on a rolled rail expansion joint. If the Contractor elects to use the welded rail expansion joint, the opening and deck dimensions shall be modified according to the dimensions detailed on this sheet. Required modifications shall be made at no additional cost to the State.

All steel components shall be galvanized after fabrication according to Article 520.03 of the Standard Specifications.

Maximum space between rail segments shall be 3/16", sealed with a suitable sealant. Joints in rails within 10 ft. of curbs shall be welded.

BILL OF MATERIAL

| Item | Unit | Total |
|---|---|---|
| Preformed Joint Strip Seal | Foot | 68 |
| | | |

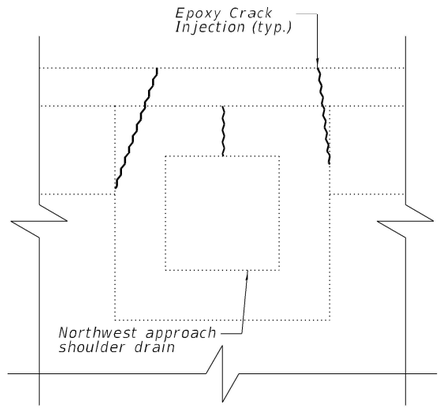


ELEVATION

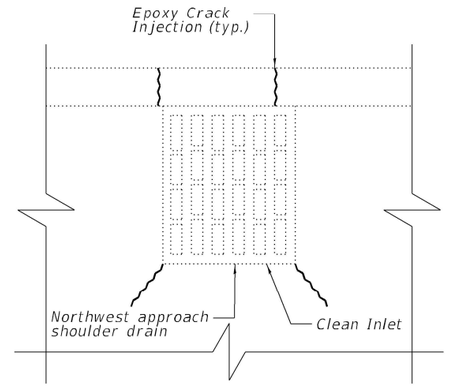


PLAN

## BILL OF MATERIAL

| ITEM | UNIT | TOTAL |
|---|---|---|
| Epoxy Crack Injection | FOOT | 5 |
| Cleaning Existing Inlets | EACH | 1 |
| | | |

MODEL: Default
FILE NAME: P:\19-1141.01 IDOT 003-0018 003-0019 Rehabs\0_IDOT\Structures\003-0018\0030018-76K46-009-West Approach Drain Repairs.dgn

Kaskaskia Engineering Group, LLC
PROFESSIONAL DESIGN FIRM
Illinois Professional Design Firm
Professional Engineering Group
200 E. Main St., Suite 100
Belleville, Illinois 62220
618.233.5877 phone
618.233.5877 fax
www.kaskaskiaeng.com
LICENSE No.
184.001773
20.5000505

| | | | |
|---|---|---|---|
| USER NAME = | DESIGNED - MMC | REVISED - | |
| | CHECKED - JW | REVISED - | |
| PLOT SCALE = | DRAWN - MMC | REVISED - | |
| PLOT DATE = | CHECKED - JW | REVISED - | |

**STATE OF ILLINOIS**
**DEPARTMENT OF TRANSPORTATION**

**WEST APPROACH DRAIN REPAIRS**
**STRUCTURE NO. 003-0018**

SHEET 9 OF 16 SHEETS

| F.A.S. RTE. | SECTION | COUNTY | TOTAL SHEETS | SHEET NO. |
|---|---|---|---|---|
| 1751 | (Q-1, X-1, F-1)RS-2, Q-1VBDR-1 | BOND | 113 | 88 |
| | | CONTRACT NO. 76K46 | | |
| | ILLINOIS | FED. AID PROJECT | | |

05/12/22 3:19:51 PM

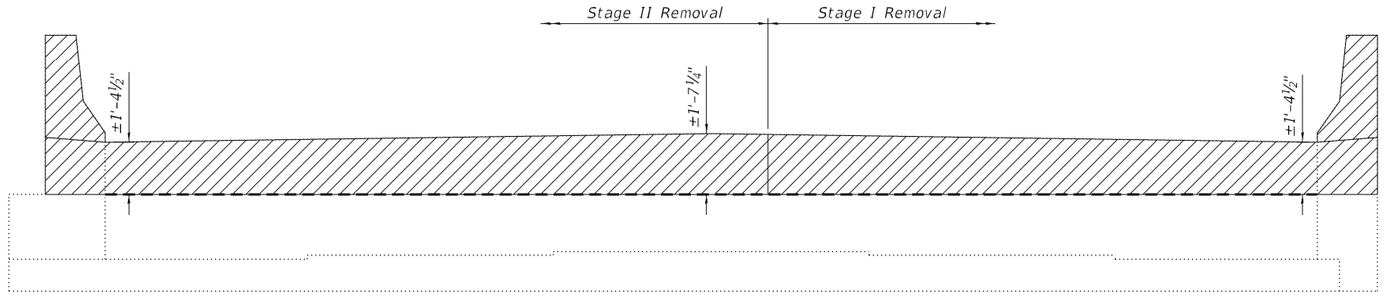


ELEVATION

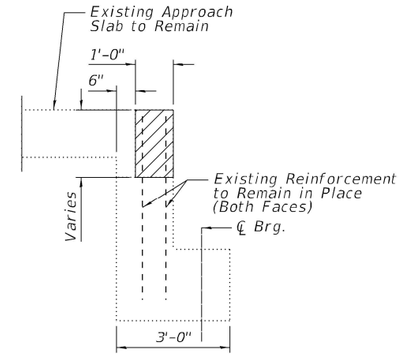


SECTION THRU ABUTMENT

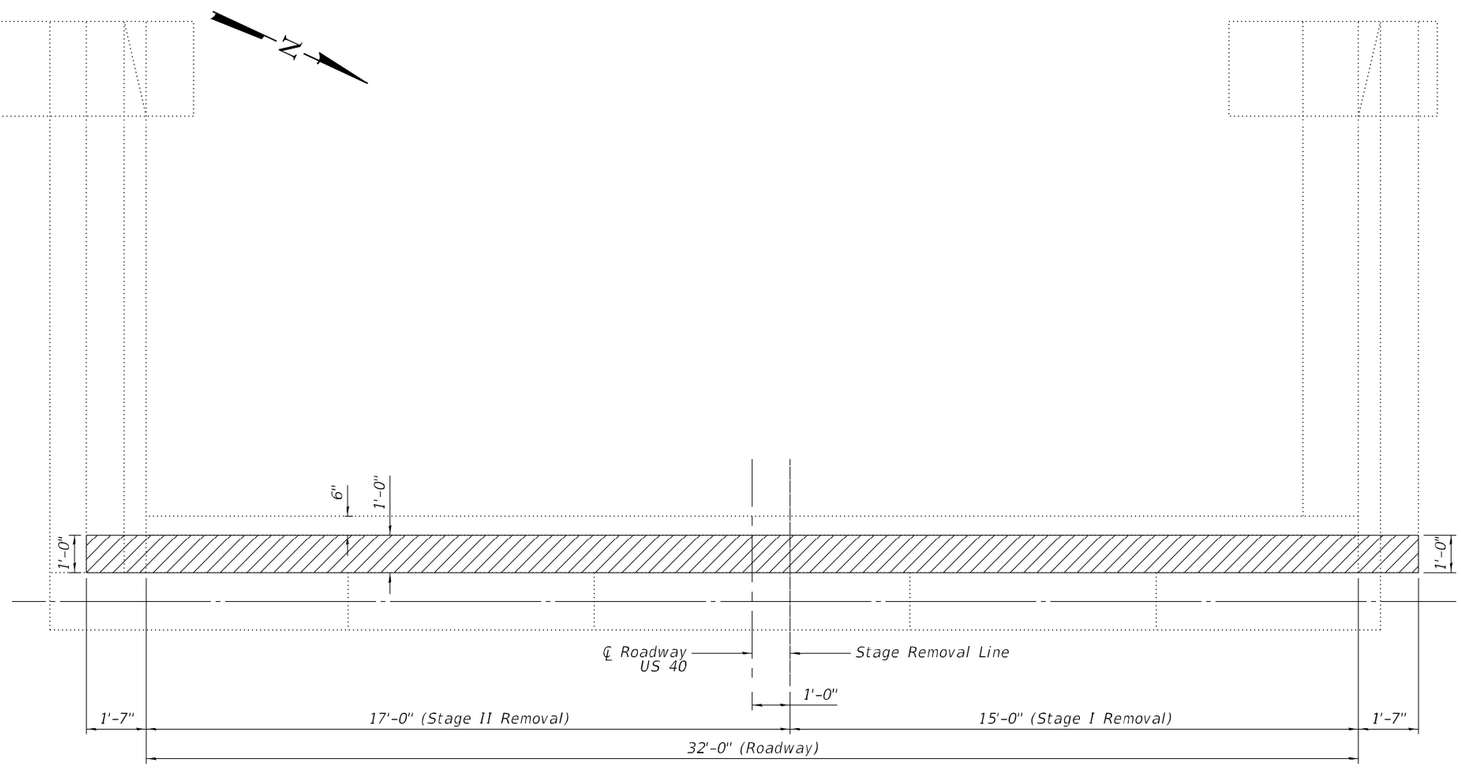


PLAN

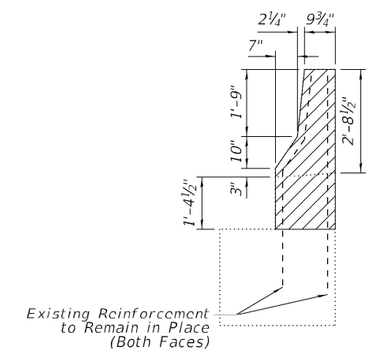


SECTIONS THRU WING WALL

(North Wing Wall Shown, South Similar)

- Indicates Limits of Concrete Removal

BILL OF MATERIAL

| ITEM | UNIT | TOTAL |
|---|---|---|
| Concrete Removal | CU YD | 2.2 |
| | | |
| | | |

MODEL: Default
FILE NAME: P:\19-1141.01 IDOT 003-0018 003-0019 Rehabs\0_IDOT\Structures\003-0018\0030018-76K46-010-West Abutment Concrete Removal.dgn
05/12/22 3:19:52 PM

Kaskaskia Engineering Group, LLC
PROFESSIONAL REGISTRATIONS
Illinois Professional Design Firm: 184.001753
Professional Engineering Group: 20-3000166
LICENSE NO.
300 E. Main St., Suite 100, Belleville, Illinois 62220
618.233.5077 phone
618.233.5077 fax
www.KaskaskiaEng.com

| | | | |
|---|---|---|---|
| USER NAME = | DESIGNED - MMC | REVISED - | |
| | CHECKED - JW | REVISED - | |
| PLOT SCALE = | DRAWN - MMC | REVISED - | |
| PLOT DATE = | CHECKED - JW | REVISED - | |

STATE OF ILLINOIS
DEPARTMENT OF TRANSPORTATION

WEST ABUTMENT CONCRETE REMOVAL
STRUCTURE NO. 003-0018

SHEET 10 OF 16 SHEETS

| F.A.S. RTE. | SECTION | COUNTY | TOTAL SHEETS | SHEET NO. |
|---|---|---|---|---|
| 1751 | (Q-1, X-1, F-1)RS-2, Q-1VBDR-1 | BOND | 113 | 89 |
| | | CONTRACT NO. 76K46 | | |
| | ILLINOIS | FED. AID PROJECT | | |

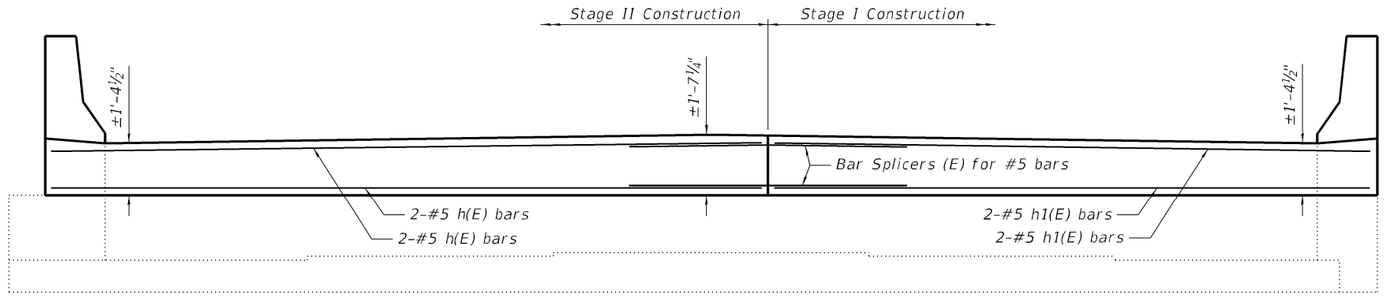


ELEVATION

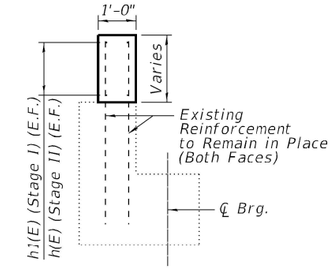


SECTION THRU ABUTMENT

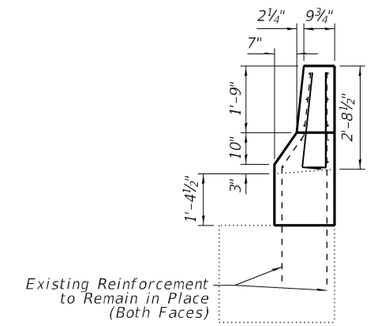


SECTIONS THRU WING WALL

(North Wing Wall Shown, South Similar)

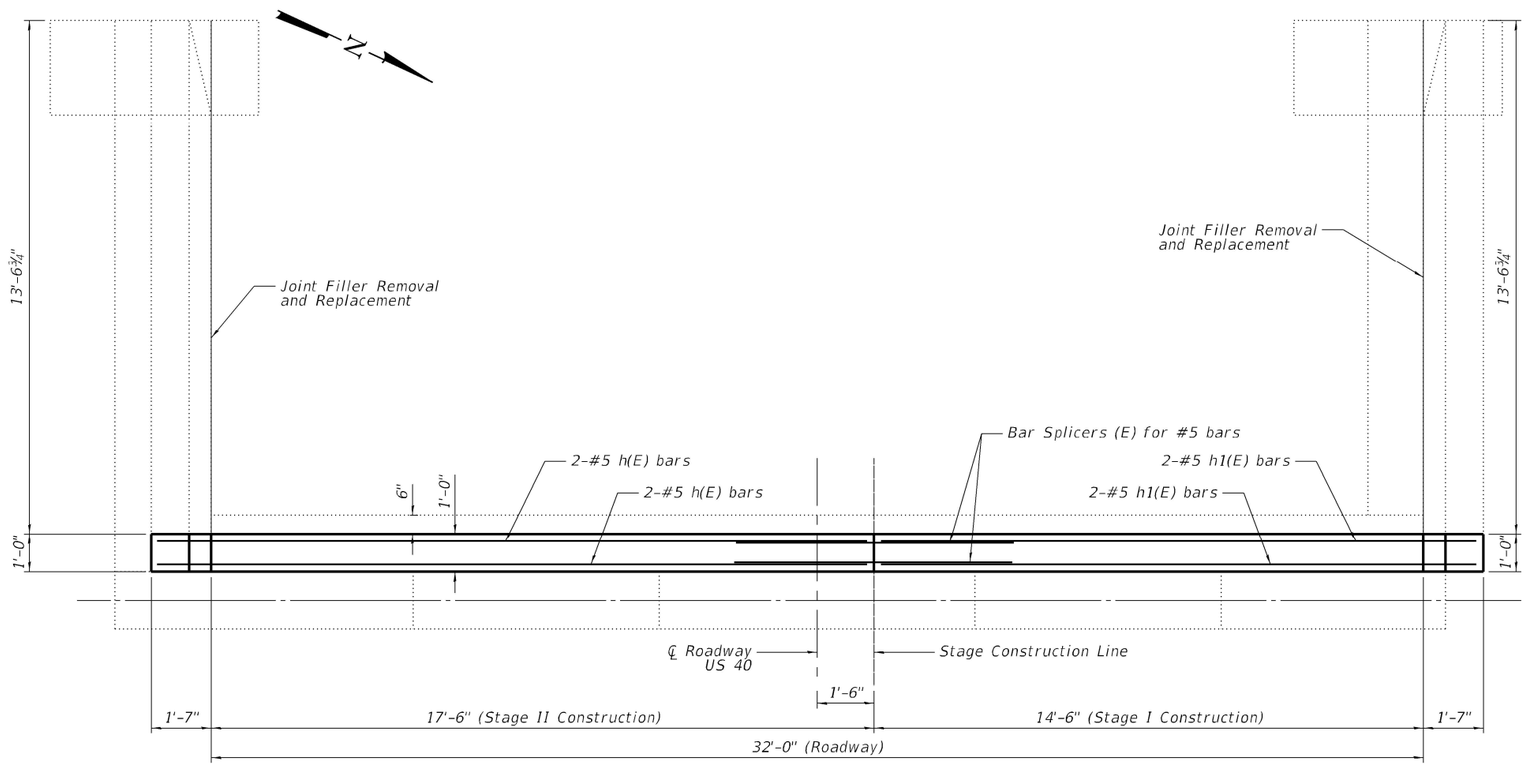


PLAN

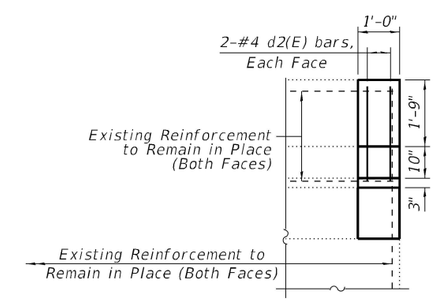


WING WALL ELEVATION

(North Wing Wall Shown, South Similar)

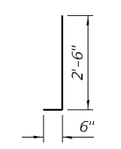


BAR d2(E)

WEST ABUTMENT BILL OF MATERIAL

| Bar | No. | Size | Length | Shape |
|---|---|---|---|---|
| d2(E) | 8 | #4 | 3'-0" | |
| | | | | |
| h(E) | 4 | #5 | 18'-9" | |
| h1(E) | 4 | #5 | 15'-9" | |
| | | | | |
| Concrete Structures | | | Cu. Yd. | 2.2 |
| Reinforcement Bars, Epoxy Coated | | | Pound | 160 |
| Replace Joint Filler | | | Foot | 28 |

MODEL: Default
FILE NAME: P:\19-1141.01 IDOT 003-0018 003-0019 Rehabs\0_IDOTStructures\003-0018\0030018-76K46-011-West Abutment Plan & Elevation.dgn
05/12/22 3:19:53 PM

Kaskaskia Engineering Group, LLC
PROFESSIONAL CERTIFICATIONS
Illinois Professional Design Firm
Professional Engineering Group
LICENSE NO.
184.001773
20-5000166

| | | | |
|---|---|---|---|
| USER NAME = | DESIGNED - MMC | REVISED - | |
| | CHECKED - JW | REVISED - | |
| PLOT SCALE = | DRAWN - MMC | REVISED - | |
| PLOT DATE = | CHECKED - JW | REVISED - | |

STATE OF ILLINOIS
DEPARTMENT OF TRANSPORTATION

WEST ABUTMENT PLAN & ELEVATION
STRUCTURE NO. 003-0018

SHEET 11 OF 16 SHEETS

| F.A.S. RTE. | SECTION | COUNTY | TOTAL SHEETS | SHEET NO. |
|---|---|---|---|---|
| 1751 | (Q-1, X-1, F-1)RS-2, Q-1VBDR-1 | BOND | 113 | 90 |
| | | CONTRACT NO. 76K46 | | |
| | | ILLINOIS FED. AID PROJECT | | |

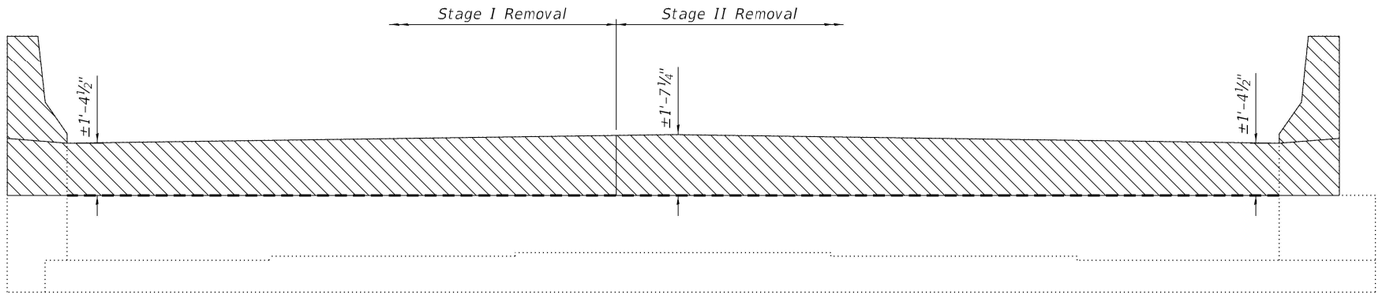


ELEVATION

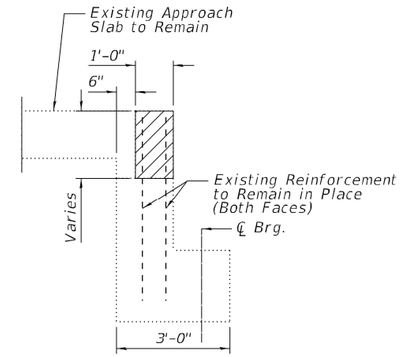


SECTION THRU ABUTMENT

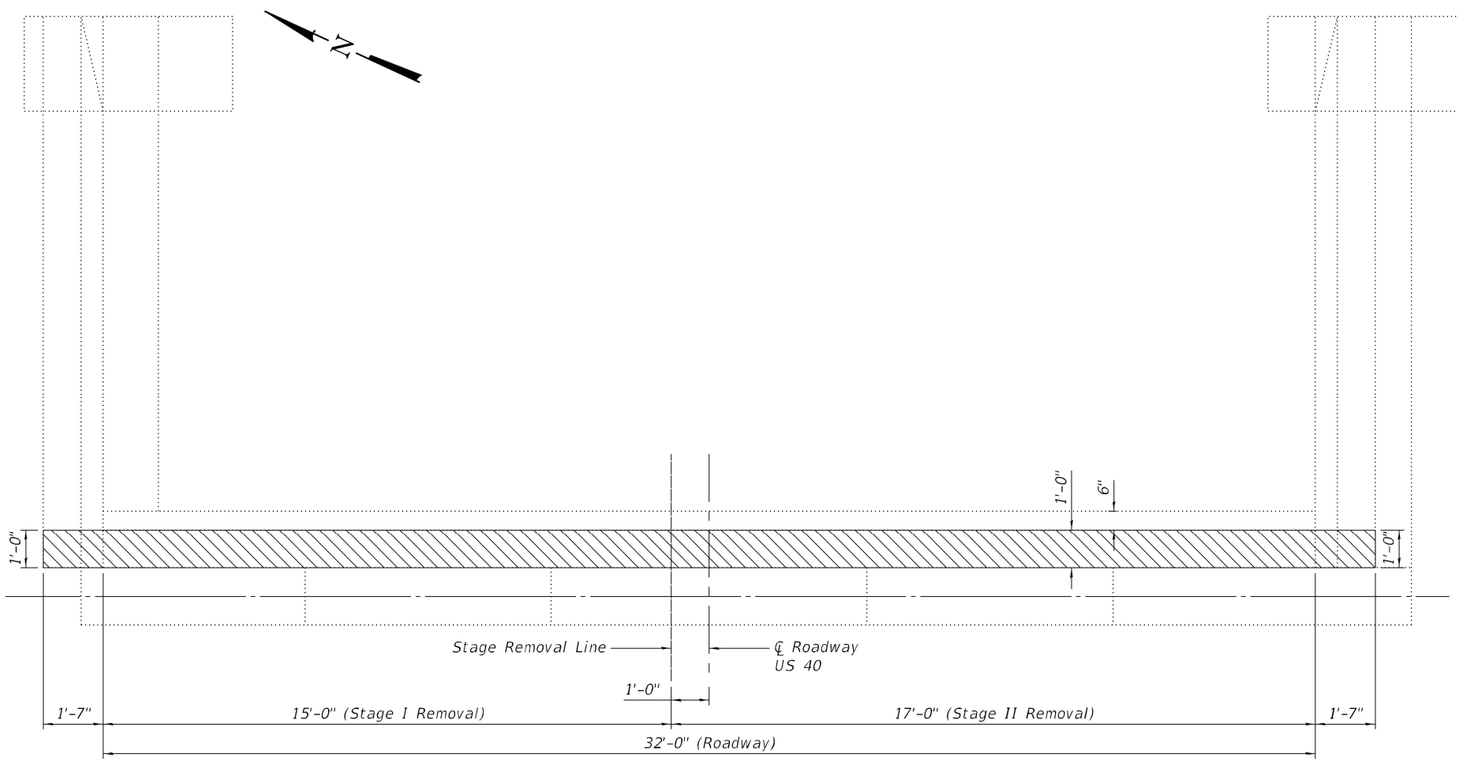


PLAN

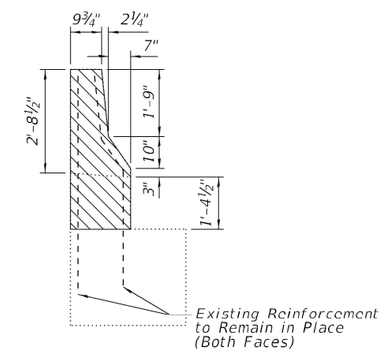


SECTIONS THRU WING WALL

(North Wing Wall Shown, South Similar)

- Indicates Limits of Concrete Removal

BILL OF MATERIAL

| ITEM | UNIT | TOTAL |
|---|---|---|
| Concrete Removal | CU YD | 2.2 |
| | | |
| | | |

MODEL: Default
FILE NAME: P:\19-1141.01 IDOT 003-0018 003-0019 Rehabs\0_IDOT\Structures\003-0018\0030018-76K46-012-East Abutment Concrete Removal.dgn

05/12/22 3:19:54 PM

Kaskaskia Engineering Group, LLC
PROFESSIONAL REGISTRATIONS: Illinois Professional Design Firm; Professional Engineering Group
LICENSE NO.: 184.001753; 20-3000165

| | | | |
|---|---|---|---|
| USER NAME = | DESIGNED - MMC | REVISED - | |
| | CHECKED - JW | REVISED - | |
| PLOT SCALE = | DRAWN - MMC | REVISED - | |
| PLOT DATE = | CHECKED - JW | REVISED - | |

STATE OF ILLINOIS
DEPARTMENT OF TRANSPORTATION

EAST ABUTMENT CONCRETE REMOVAL
STRUCTURE NO. 003-0018

SHEET 12 OF 16 SHEETS

| F.A.S. RTE. | SECTION | COUNTY | TOTAL SHEETS | SHEET NO. |
|---|---|---|---|---|
| 1751 | (Q-1, X-1, F-1)RS-2, Q-1VBDR-1 | BOND | 113 | 91 |
| | | CONTRACT NO. 76K46 | | |
| | ILLINOIS | FED. AID PROJECT | | |

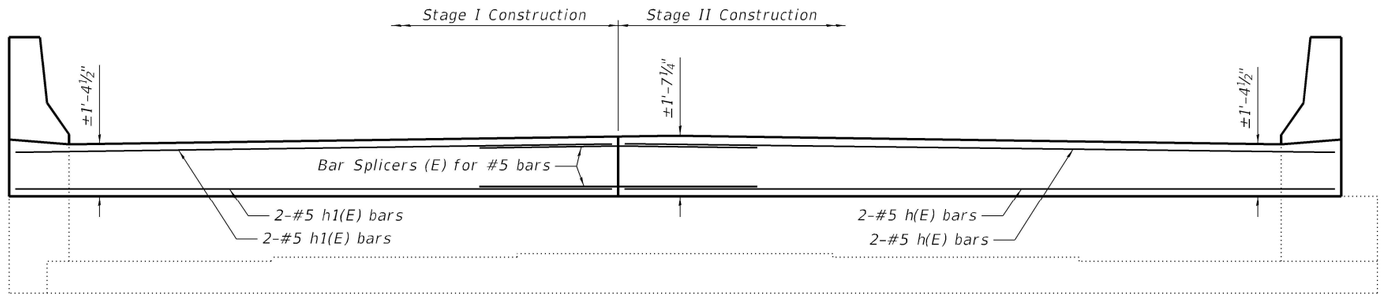


ELEVATION

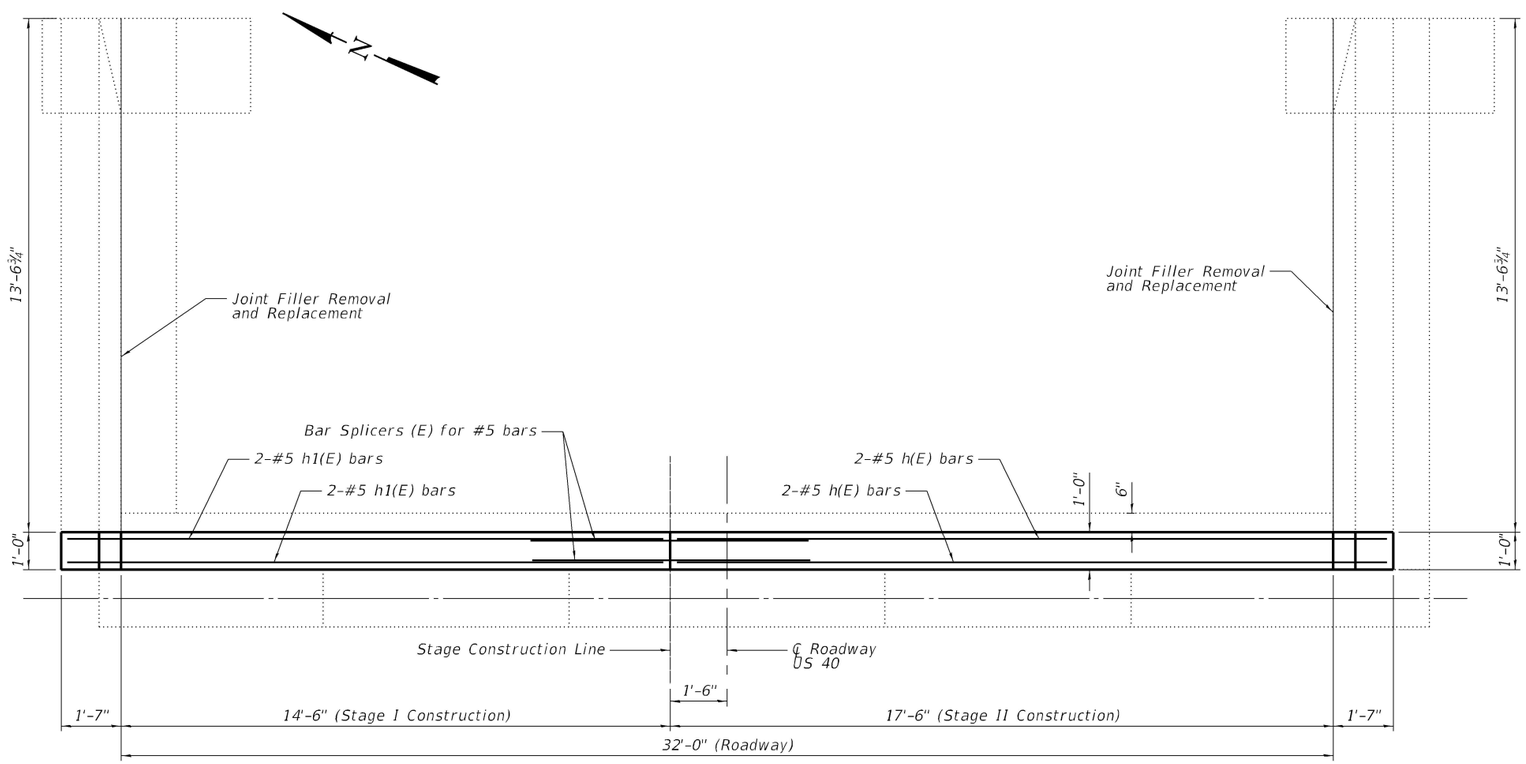


PLAN

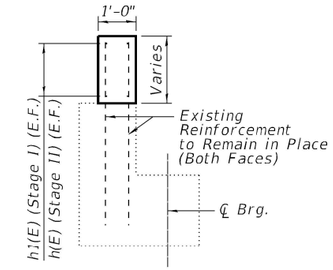


SECTION THRU ABUTMENT

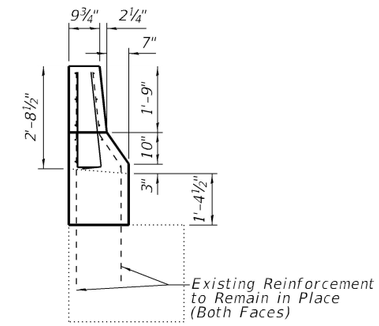


SECTIONS THRU WING WALL

(North Wing Wall Shown, South Similar)

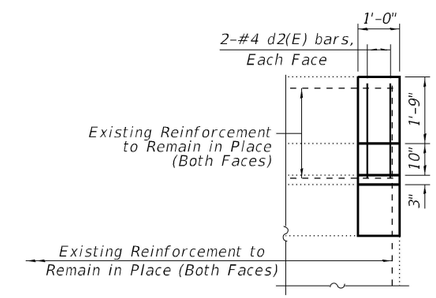


WING WALL ELEVATION

(North Wing Wall Shown, South Similar)

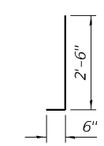


BAR d2(E)

EAST ABUTMENT BILL OF MATERIAL

| Bar | No. | Size | Length | Shape |
|---|---|---|---|---|
| d2(E) | 8 | #4 | 3'-0" | |
| | | | | |
| h(E) | 4 | #5 | 18'-9" | |
| h1(E) | 4 | #5 | 15'-9" | |
| | | | | |
| Concrete Structures | | | Cu. Yd. | 2.2 |
| Reinforcement Bars, Epoxy Coated | | | Pound | 160 |
| Replace Joint Filler | | | Foot | 28 |

MODEL: Default
FILE NAME: P:\19-1141.01 IDOT 003-0018 003-0019 Rehabs\0_IDOT\Structures\003-0018\0030018-76K46-013-East Abutment Plan & Elevation.dgn

Kaskaskia Engineering Group, LLC
PROFESSIONAL DESIGN FIRMS
Illinois Professional Design Firm: Professional Engineering Group
LICENSE NO. 184.001733
20-0000105

| | | | |
|---|---|---|---|
| USER NAME = | DESIGNED - MMC | REVISED - | |
| | CHECKED - JW | REVISED - | |
| PLOT SCALE = | DRAWN - MMC | REVISED - | |
| PLOT DATE = | CHECKED - JW | REVISED - | |

STATE OF ILLINOIS
DEPARTMENT OF TRANSPORTATION

EAST ABUTMENT PLAN & ELEVATION
STRUCTURE NO. 003-0018

SHEET 13 OF 16 SHEETS

| F.A.S. RTE. | SECTION | COUNTY | TOTAL SHEETS | SHEET NO. |
|---|---|---|---|---|
| 1751 | (Q-1, X-1, F-1)RS-2, Q-1VBDR-1 | BOND | 113 | 92 |

CONTRACT NO. 76K46

ILLINOIS FED. AID PROJECT

05/12/22 3:19:55 PM

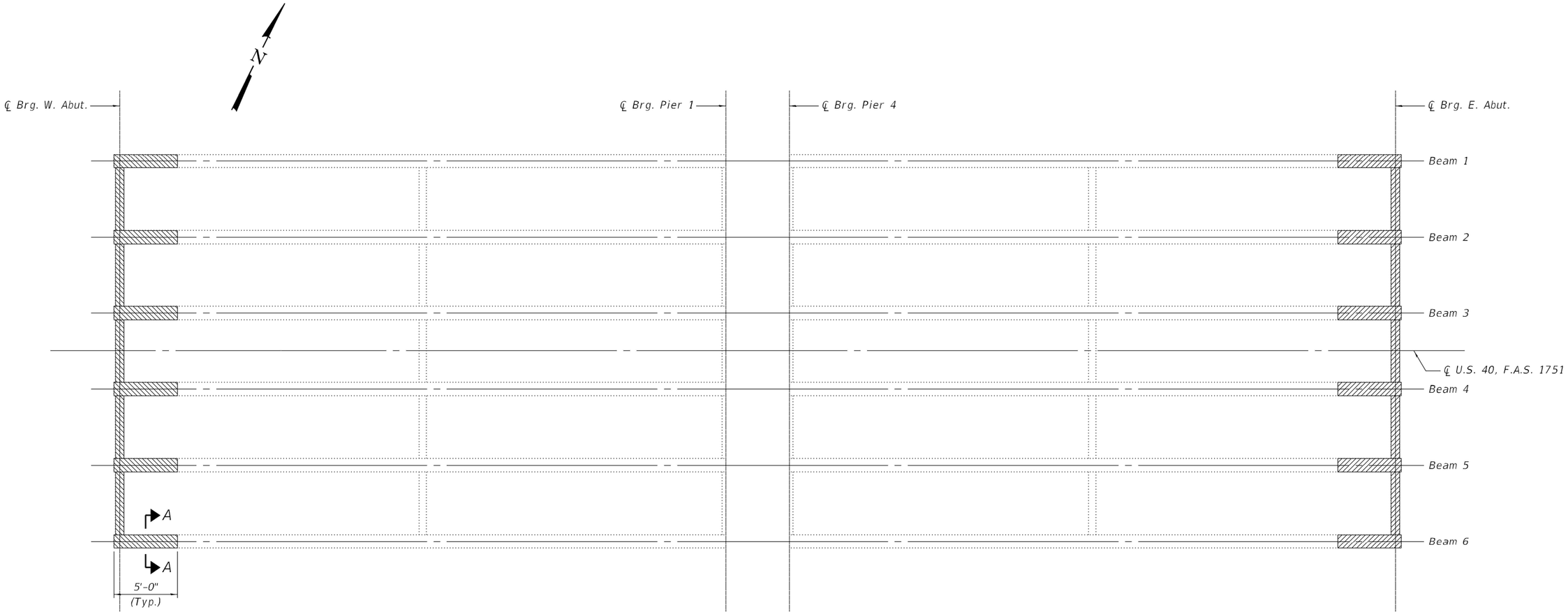


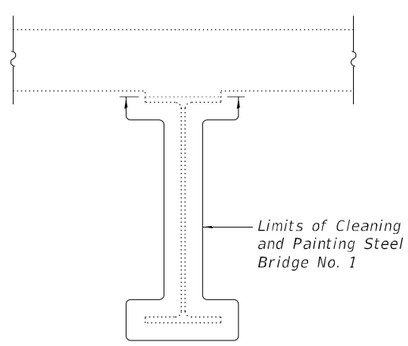


SECTION A-A

Indicates limits of Cleaning and Painting Steel Bridge No. 1.

Notes:

1. See General Notes on Sheet 2 of 16 for additional painting requirements.
2. Cleaning and Painting Steel Bridge No. 1 shall include the beam ends and end diaphragms.
3. The area of steel to be painted is approximately 800 square feet.
4. Existing plan of structural steel is shown on Sheet 16 of 16.

MODEL: Default
FILE NAME: P:\19-114101 IDOT 003-0018 003-0019 Rehabs\0_IDOT\Structures\003-0018\0030018-76K46-014-PAINT DETAILS.dgn

Kaskaskia Engineering Group, LLC
PROFESSIONAL DESIGN FIRM
Illinois Professional Design Firm
Professional Engineering Group
200 E. Main St., Suite 100
Belleville, Illinois 62220
618.233.5877 phone
618.233.5877 fax
www.kaskaskiaeng.com
LICENSE No.
184.007173
20.5000166

| | | | |
|---|---|---|---|
| USER NAME = | DESIGNED - MMC | REVISED - | |
| | CHECKED - JW | REVISED - | |
| PLOT SCALE = | DRAWN - MMC | REVISED - | |
| PLOT DATE = | CHECKED - JW | REVISED - | |

**STATE OF ILLINOIS**
**DEPARTMENT OF TRANSPORTATION**

**EXISTING STEEL CLEANING & PAINTING DETAILS**
**STRUCTURE NO. 003-0018**

SHEET 14 OF 16 SHEETS

| F.A.S. RTE. | SECTION | COUNTY | TOTAL SHEETS | SHEET NO. |
|---|---|---|---|---|
| 1751 | (Q-1, X-1, F-1)RS-2, Q-1VBDR-1 | BOND | 113 | 93 |
| | | CONTRACT NO. 76K46 | | |
| | ILLINOIS | FED. AID PROJECT | | |

05/12/22 3:19:56 PM

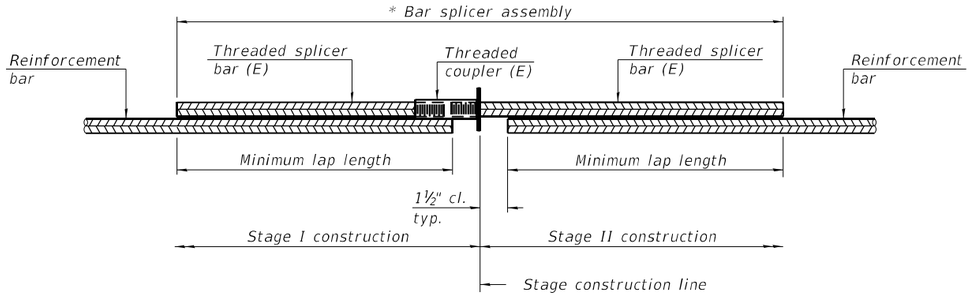


## STANDARD BAR SPLICER ASSEMBLY PLAN

(All components shall be provided from one supplier)

Threaded splicer bar length = min. lap length + 1½" + thread length

* Epoxy not required on Bar Splicer Assembly components used in conjunction with black bars.

| Location | Bar size | No. assemblies required | Minimum lap length |
|---|---|---|---|
| West Abutment | #5 | 4 | 3'-6" |
| East Abutment | #5 | 4 | 3'-6" |
| Deck | #5 | 28 | 3'-6" |
| | | | |
| | | | |

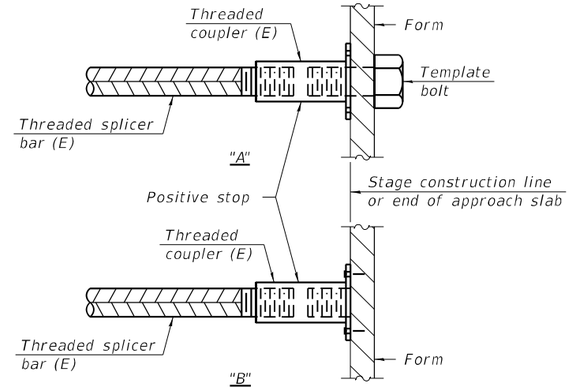


## INSTALLATION AND SETTING METHODS

"A" : Set bar splicer assembly by means of a template bolt.
"B" : Set bar splicer assembly by nailing to wood forms or cementing to steel forms.
(E) : Indicates epoxy coating.

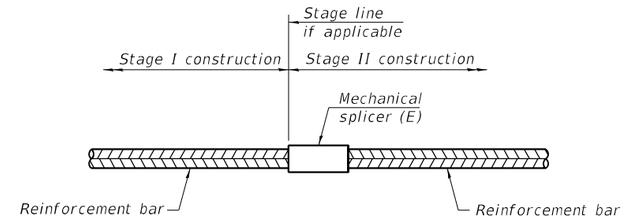


## STANDARD MECHANICAL SPLICER

| Location | Bar size | No. assemblies required |
|---|---|---|
| | | |
| | | |
| | | |
| | | |
| | | |

Notes:
Splicer bars shall be deformed with threaded ends and have a minimum 60 ksi yield strength.
All reinforcement shall be lapped and tied to the splicer bars.
Bar splicer assemblies shall be epoxy coated according to the requirements for reinforcement bars. See Section 508 of the Standard Specifications.
See approved list of bar splicer assemblies and mechanical splicers for alternatives.

BSD-1 1-1-2020

STATE OF ILLINOIS
DEPARTMENT OF TRANSPORTATION

| ROUTE NO. | SECTION | COUNTY | TOTAL SHEETS | SHEET NO. |
|---|---|---|---|---|
| FAS 1748 | Q-1VBR | BOND | 38 | 14 |
| FED. ROAD DIST. NO. | ILLINOIS | FED. AID PROJECT | | |

SHEET NO. 7 / 14 SHEETS

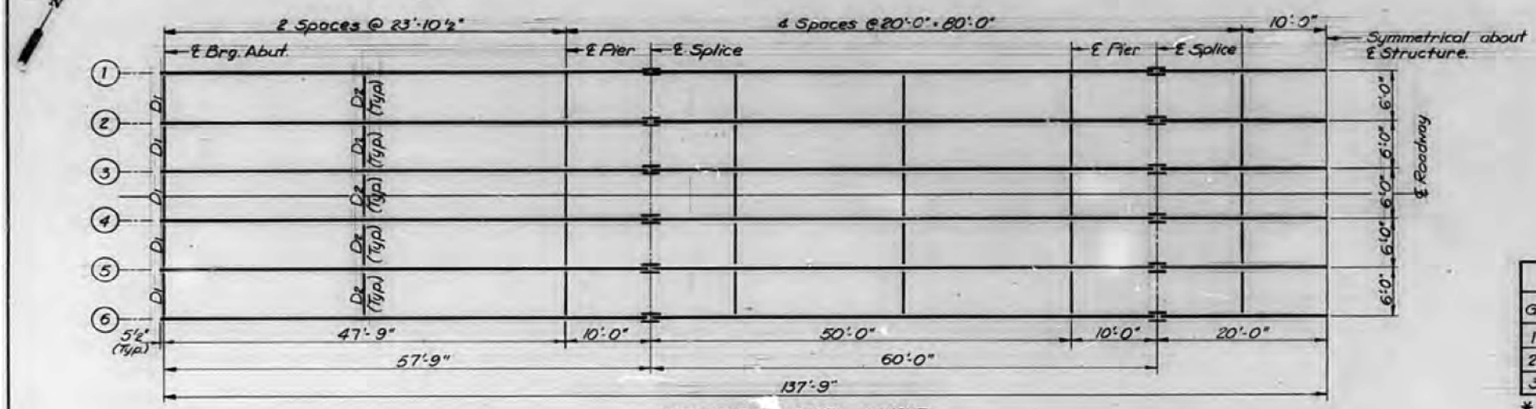


STRUCTURAL STEEL LAYOUT
Half Plan

| TOP OF GIRDER ELEVATIONS * | | | | | | | | | | |
|---|---|---|---|---|---|---|---|---|---|---|
| Girder | ℄ Brg. W. Abut. | ℄ Pier 1 | Span 2 Splice 1 | ℄ Pier 2 | Span 3 Splice 1 | Span 3 Splice 2 | ℄ Pier 3 | Span 4 Splice 1 | ℄ Pier 4 | ℄ Brg. E. Abut. |
| 1 & 6 | 577.510 | 577.917 | 577.999 | 578.332 | 578.395 | 578.539 | 578.579 | 578.656 | 578.656 | 578.643 |
| 2 & 5 | 577.620 | 578.026 | 578.109 | 578.442 | 578.504 | 578.669 | 578.688 | 578.765 | 578.766 | 578.752 |
| 3 & 4 | 577.714 | 578.120 | 578.202 | 578.535 | 578.598 | 578.762 | 578.812 | 578.859 | 578.860 | 578.846 |

* for fabrication only, does not include dead load deflection.

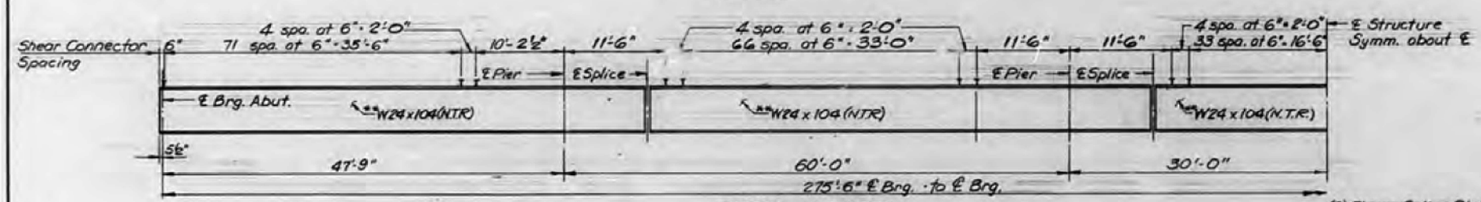


GIRDER ELEVATION
** M223 - Grade 50
Note: N.T.R. denotes members subject to Notch Toughness Requirements.

Is and Ss are the moment of inertia and section modulus of the steel section used in computing fs(Total).
Ic and Sc are the moment of inertia and section modulus of the composite section used in computing fs(Total).
VR is the maximum Live Load + impact shear range in span.
fs(Total) is the sum of the stresses due to 1.3[MDL + MSDL + ⅝(MLL + I)].

| INTERIOR GIRDER MOMENTS | | | | | |
|---|---|---|---|---|---|
| | 0.4 Span 1 0.6 Span 5 | Piers 1 & 4 | 0.5 Spans 2 & 4 | Piers 2 & 3 | 0.5 Span 3 |
| Is (in⁴) | 3100 | 3100 | 3100 | 3100 | 3100 |
| Ic (in⁴) | 8750 | — | 8750 | — | 8750 |
| Ss (in³) | 258 | 258 | 258 | 258 | 258 |
| Sc (in³) | 384 | — | 384 | — | 384 |
| DL (k/') | 0.720 | 1.013 | 0.720 | 1.013 | 0.720 |
| MDL ('k) | 112.6 | 282.3 | 110.0 | 293.8 | 107.0 |
| SDL (k/') | 0.293 | — | 0.293 | — | 0.293 |
| MSDL ('k) | 53.5 | — | 60.9 | — | 58.2 |
| MLL ('k) | 287.6 | 158.8 | 331.8 | 175.5 | 333.6 |
| MIMP ('k) | 79.9 | 44.1 | 92.2 | 47.4 | 90.2 |
| ⅝(ML+I) ('k) | 612.5 | 338.2 | 706.7 | 371.5 | 706.3 |
| Ma ('k) | 1012.2 | 806.7 | 1140.9 | 864.9 | 1133.0 |
| * Mu ('k) | 289 | — | 289 | — | 289 |
| fs ℄(non comp)(ksi) | 5.2 | 13.1 | 5.1 | 13.7 | 5.0 |
| fs ℄(comp)(ksi) | 1.7 | — | 1.9 | — | 1.8 |
| fs ⅝(L+I)(ksi) | 19.1 | 15.7 | 22.1 | 17.3 | 22.1 |
| fs(overhang)(ksi) | 26.0 | 28.8 | 29.1 | 31.0 | 28.9 |
| ** fs(Total)(ksi) | | 37.4 | | 40.3 | |
| VR (k) | 42.9 | — | 39.1 | — | 38.3 |

* Mu = Full Plastic Moment Capacity for Compact, Braced Section.
** Braced Non-Compacted Section
Ma (Applied Moment) = 1.3 [MDL + MSDL + ⅝ (ML + I)]

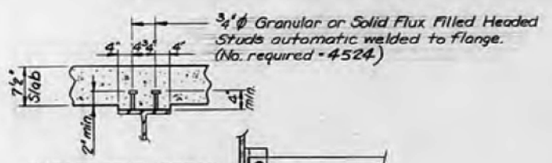


SHEAR STUD DETAIL

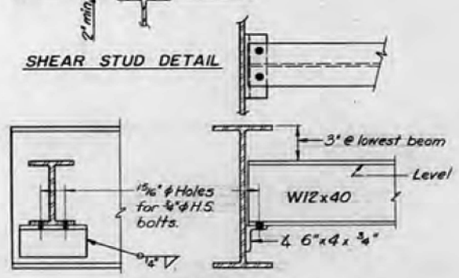


DIAPHRAGM D1
10 Required

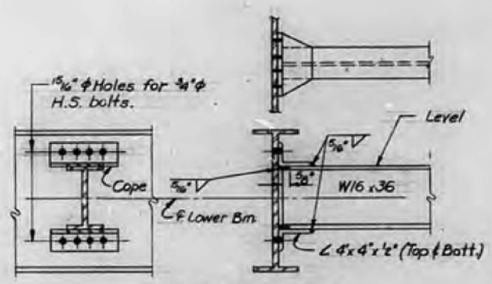


DIAPHRAGM D2
60 Required

Note:
Two hardened washers shall be required over all 15/16" ϕ holes in diaphragm connections.

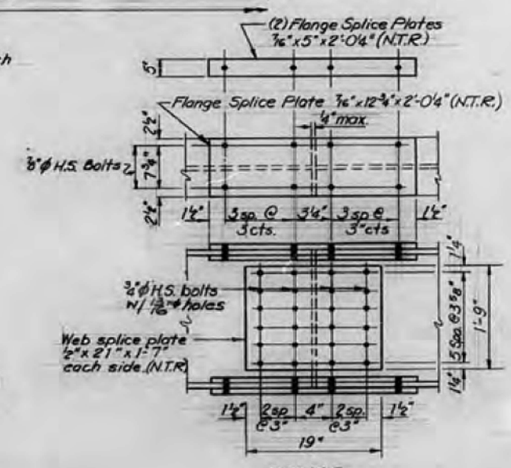


SPLICE

All structural steel fabricators performing work on the main load carrying components of steel structures shall be certified under Catagory I (A.I.S.C.) of the Quality Certification Program.

| INTERIOR GIRDER REACTIONS | | | |
|---|---|---|---|
| | Abutments | Pier 1 & 4 | Pier 2 & 3 |
| RDL (k) | 18.5 | 60.7 | 61.4 |
| RLL (k) | 30.5 | 42.2 | 42.4 |
| RIMP (k) | 8.9 | 12.1 | 12.1 |
| RTOT (k) | 57.9 | 115.0 | 115.9 |

Note:
All splice plate material shall be M223 (Gr. 50) steel and shall conform to notch toughness requirements.

DESIGNED C.L.M.W.
CHECKED R.A.B.
DRAWN K.B.F.
CHECKED

Note: This drawing is not to scale. Follow dimensions.

STRUCTURAL STEEL LAYOUT
FAS Rte. 1748 (U.S. Rte. 40)
over BURLINGTON NORTHERN R.R.
SECTION Q-1 VBR
BOND COUNTY
STA. 6+39.39
STRUCTURE NO. 003-0018

FOR INFORMATION ONLY

MODEL: Default
FILE NAME: P:\19-1141.01 IDOT 003-0018 003-0019 Rehabs\0_IDOT\Structures\003-0018\0030018-76K46-016-Exis. Plans.dgn

Kaskaskia Engineering Group, LLC
200 E. Main St., Suite 100
Belleville, Illinois 62220
618.233.5977 phone
618.233.5975 fax
www.kaskaskiaeng.com
PROFESSIONAL ENGINEERING
Illinois Professional Design Firm: 184.005773
Professional Engineering Group: 20-3880101

| | | | |
|---|---|---|---|
| USER NAME = | DESIGNED - MLC | REVISED - | |
| | CHECKED - JW | REVISED - | |
| PLOT SCALE = | DRAWN - MLC | REVISED - | |
| PLOT DATE = | CHECKED - JW | REVISED - | |

STATE OF ILLINOIS
DEPARTMENT OF TRANSPORTATION

EXISTING PLANS
STRUCTURE NO. 003-0018
SHEET 16 OF 16 SHEETS

| F.A.S. RTE. | SECTION | COUNTY | TOTAL SHEETS | SHEET NO. |
|---|---|---|---|---|
| 1751 | (Q-1, X-1, F-1)RS-2, Q-1VBDR-1 | BOND | 113 | 95 |
| | | CONTRACT NO. 76K46 | | |
| | | ILLINOIS | FED. AID PROJECT | |

05/12/22 3:19:58 PM

Bench Mark: National Geodetic Survey P-113: Monument on concrete base ±66' southeast of intersection of CSX and BNSF tracks. Elev. 553.194 (NGVD 29), 552.78 (NAVD 88). Elevations on plans are in NGVD 29.

Existing Structure: SN 003-0019 was originally constructed in 1942 as a 3 span continuous concrete girder bridge, 155.375' back-to-back of abutment, concrete deck width 35.5' out-to-out. The superstructure was removed and reconstructed in 1988 with continuous steel beams and a concrete deck, 35'-2" out-to-out. The bridge is supported by stub abutments on piles and concrete wall piers on spread footings.

Salvage: None.

## DESIGN STRESSES

Existing Structure (1988 Construction)

f'c = 3,500 psi
fy = 60,000 psi (Reinforcement)
fy = 50,000 psi (M223 Grade 50)
fy = 36,000 psi (M-183)

New Construction

fy = 60,000 psi (Reinforcement)
fy = 50,000 psi (M270 Grade 50)

## DESIGN SPECIFICATIONS

2002 AASHTO Standard Specifications for Highway Bridges

LOADING HS20-44

## INDEX OF SHEETS



## SCOPE OF WORK

To be completed under stage construction.

1. Repair bridge deck.
2. Seal joint between approach parapets and approach shoulders.
3. Repair abutment backwalls.
4. Reconstruct deck joints at each abutment with preformed joint strip seal.
5. Install new waterproofing and HMA overlay.
6. Clean and paint structural steel at designated locations.
7. Clean gutters at base of slope walls.
8. Upgrade & reconnect guardrail transitions (See Roadway Plans).
9. Re-establish aggregate shoulders at approach ends at all four (4) quadrants (See Roadway Plans).
10. Repair east abutment approach drain on north side.

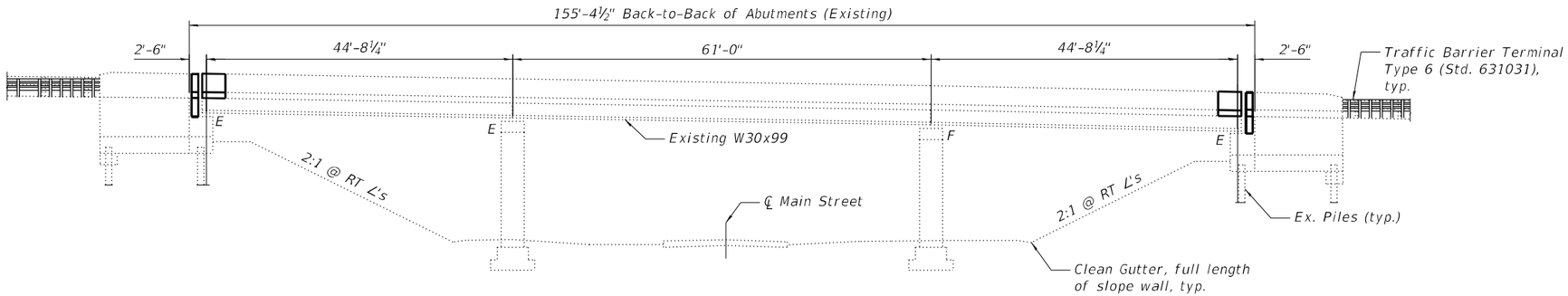


ELEVATION

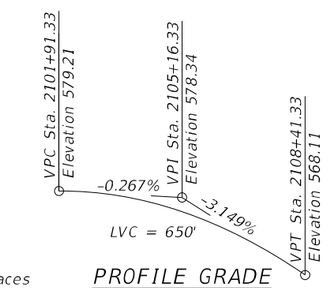


PROFILE GRADE
(Along ℄ US 40 F.A.S. 1751)

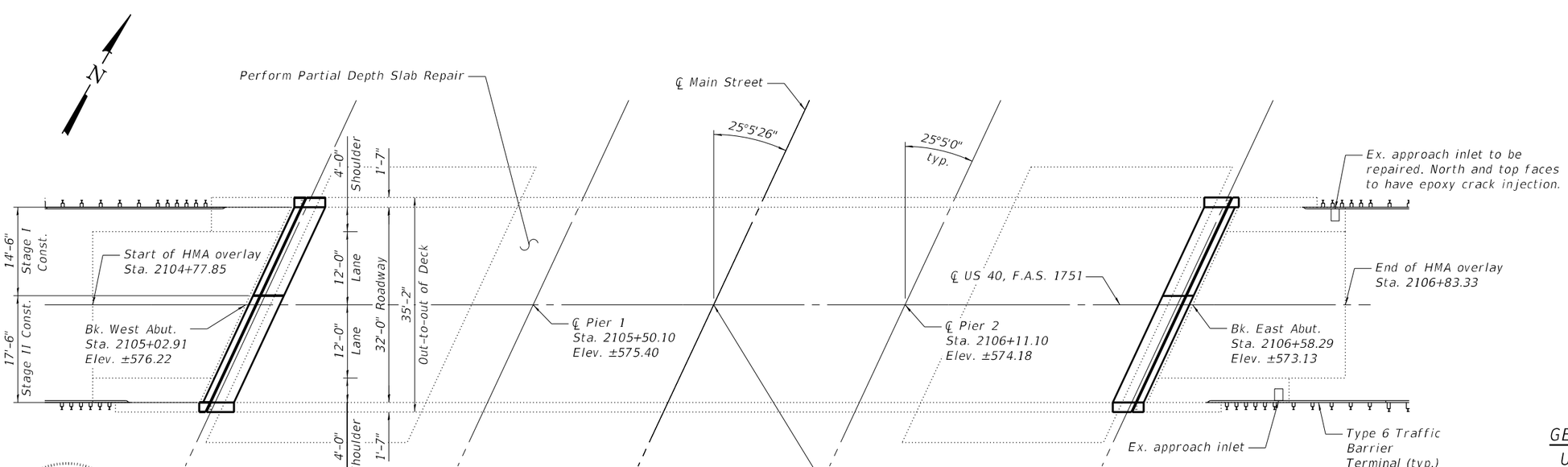


PLAN

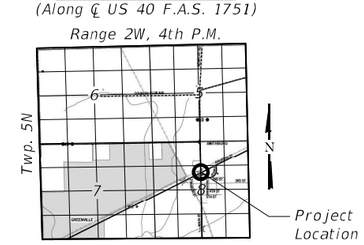


LOCATION SKETCH

LICENSED STRUCTURAL ENGINEER
MOSHE L. COHEN
081-008104
STATE OF ILLINOIS

Signed: Moshe L Cohen
Dated: 2022-12-02
Expires: November 30, 2024

# GENERAL PLAN & ELEVATION
# US 40 OVER MAIN STREET
# F.A.U. 9832 / FAS 1751
# SEC. (Q-1, X-1, F-1)RS-2, Q-1VBDR-1
# BOND COUNTY
# STATION 2105+79.71
# STRUCTURE NO. 003-0019

## GENERAL NOTES

1. Reinforcement bars designated (E) shall be epoxy coated.
2. All heavy or loose rust, loose mill scale, and other loose or potentially detrimental foreign material shall be removed from the surfaces in contact with concrete. Tightly adhered paint may remain unless otherwise noted. Removal shall be accomplished by methods that will not damage the steel and the cost will be included in the pay item covering removal of the existing concrete.
3. Plan dimensions and details relative to existing plans are subject to nominal construction variations. The Contactor shall field verify existing dimensions and details affecting new construction and make necessary approved adjustments prior to construction or ordering of materials. Such variations shall not be cause for additional compensation for a change in scope of the work, however, the Contractor will be paid for the quantity actually furnished at the unit price bid for the work.
4. Joint openings shall be adjusted according to Article 520.04 of the Standard Specifications at ambient temperature other than 50°F.
5. Cleaning and painting of the existing structure steel shall be as specified in the special provisions for "Cleaning and Painting Existing Steel Structures". All beams, bearings and other structural steel within 5 ft. (measured along the beam), unless noted otherwise, of either side of the deck joints shall be cleaned per Near White Blast Cleaning – SSPC-SP-10.
6. The designated areas cleaned per Near White Blast Cleaning – SSPC-SP-10 shall be painted according to the requirements of Paint System 1 – OZ/E/U.
7. The color of the final finish coat for all steel surfaces shall be Blue, Munsell NO. 10B 3/6.
8. Containment and disposal of non-lead paint cleaning residues shall be as specified in special provisions for "Containment and Disposal of Non-Lead Paint Cleaning Residues".
9. The painting Contractor shall be SSPC-QP1 certified for this project and shall maintain certification throughout the duration of the project.
10. Quantity of Deck Slab Repair (Partial) shown on the plans is an estimate based on existing conditions at the time of the estimate. Final quantities shall be determined by the Engineer in the field.
11. All exposed concrete edges shall have a standard 3/4" chamfer unless noted otherwise.

## TOTAL BILL OF MATERIAL

| ITEM | UNIT | SUPER | SUB | TOTAL |
|---|---|---|---|---|
| Hot-Mix Asphalt Surface Course, IL-9.5FG, Mix "D", N70 | Ton | 39 | | 39 |
| Concrete Removal | Cu. Yd. | 7.7 | 5.4 | 13.1 |
| Concrete Structures | Cu. Yd. | | 5.4 | 5.4 |
| Concrete Superstructure | Cu. Yd. | 7.7 | | 7.7 |
| Reinforcement Bars, Epoxy Coated | Pound | 1,560 | 440 | 2,000 |
| Bar Splicers | Each | 28 | 8 | 36 |
| Preformed Joint Strip Seal | Foot | 75 | | 75 |
| Gutters to be Cleaned | Foot | | 100 | 100 |
| Epoxy Crack Injection | Foot | 5 | | 5 |
| Replace Joint Filler | Foot | 55 | | 55 |
| Containment and Disposal of non-lead Paint Cleaning Residues No. 2 | L. Sum | 1 | | 1 |
| Cleaning and Painting Steel Bridge No. 2 | L. Sum | 1 | | 1 |
| Deck Slab Repair (Partial) | Sq. Yd. | 10 | | 10 |
| Cleaning Existing Inlets | Each | 1 | | 1 |
| Waterproofing Membrane System | Sq. Yd. | 517 | | 517 |

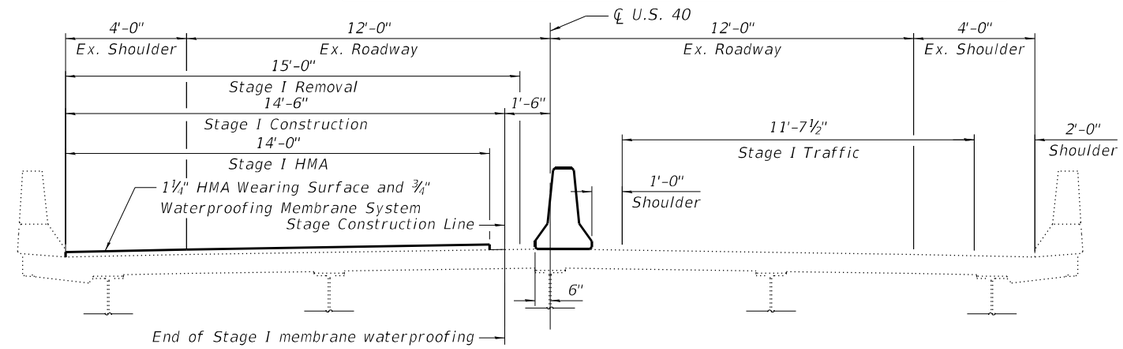


## STAGE 1 - TYPICAL SECTION

(Looking Upstation)

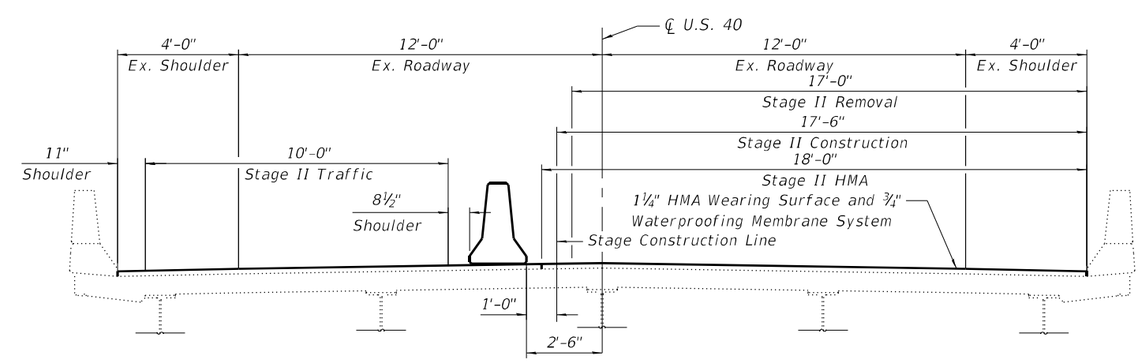


## STAGE 2 - TYPICAL SECTION

(Looking Upstation)

MODEL: Default
FILE NAME: P:\19-1141.01 IDOT 003-0018 003-0019 Rehabs\0_IDOT\Structures\003-0019\0030019-76K46-002-GENERAL DATA.dgn

Kaskaskia Engineering Group, LLC
PROFESSIONAL DESIGN FIRM
Illinois Professional Design Firm
Professional Engineering Group
200 E. Main St., Suite 100
Belleville, Illinois 62220
618.233.5677 phone
618.233.5677 fax
www.kaskaskiaeng.com
LICENSE NO.
184.001773
EXPIRATION
25.500000

| | | | |
|---|---|---|---|
| USER NAME = | DESIGNED - MLC | REVISED - | |
| | CHECKED - JW | REVISED - | |
| PLOT SCALE = | DRAWN - MLC | REVISED - | |
| PLOT DATE = | CHECKED - JW | REVISED - | |

**STATE OF ILLINOIS**
**DEPARTMENT OF TRANSPORTATION**

**GENERAL DATA**
**STRUCTURE NO. 003-0019**

SHEET 2 OF 16 SHEETS

| F.A.S. RTE. | SECTION | COUNTY | TOTAL SHEETS | SHEET NO. |
|---|---|---|---|---|
| 1751 | (Q-1, X-1, F-1)RS-2, Q-1VBDR-1 | BOND | 113 | 97 |

CONTRACT NO. 76K46

ILLINOIS FED. AID PROJECT

05/12/22 3:21:04 PM

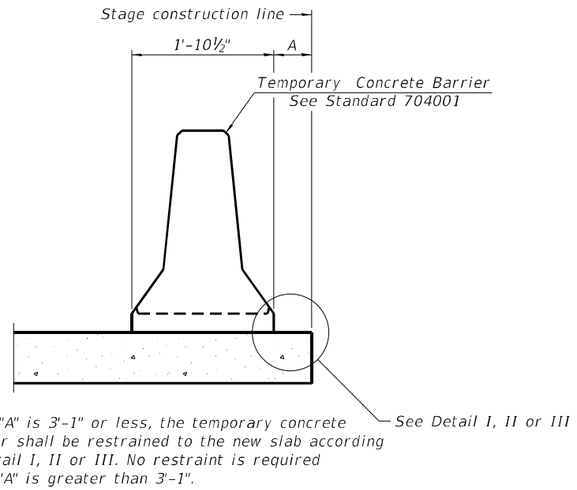


When "A" is 3'-1" or less, the temporary concrete barrier shall be restrained to the new slab according to Detail I, II or III. No restraint is required when "A" is greater than 3'-1".

NEW SLAB OR NEW DECK BEAM

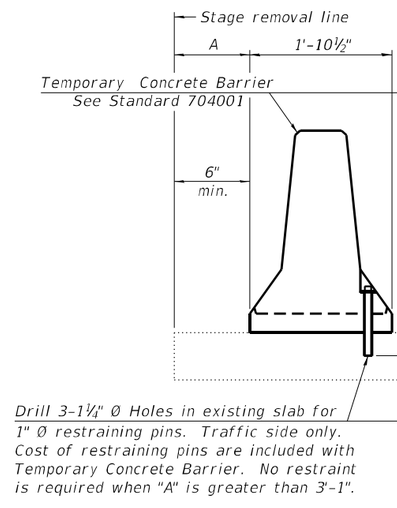


Drill 3-1¼" Ø Holes in existing slab for 1" Ø restraining pins. Traffic side only. Cost of restraining pins are included with Temporary Concrete Barrier. No restraint is required when "A" is greater than 3'-1".

EXISTING SLAB

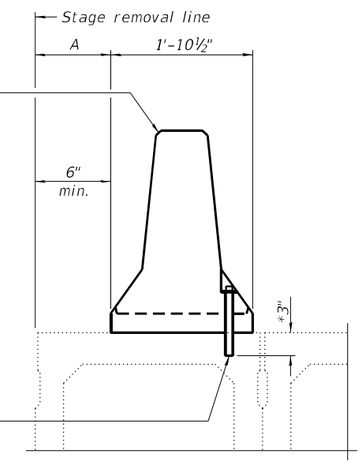


* When hot-mix asphalt wearng surface is present, embedment shall be 3" plus the wearing surface depth.

EXISTING DECK BEAM

## SECTIONS THRU SLAB OR DECK BEAM

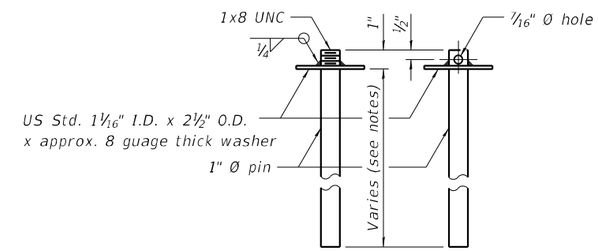


## RESTRAINING PIN

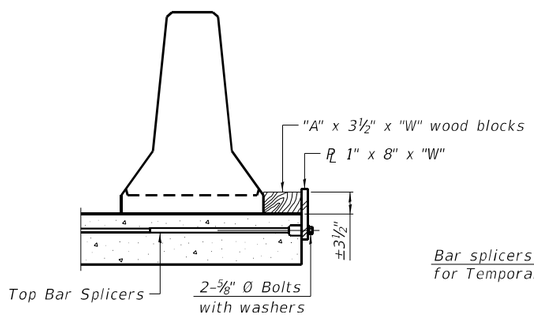


## DETAIL I

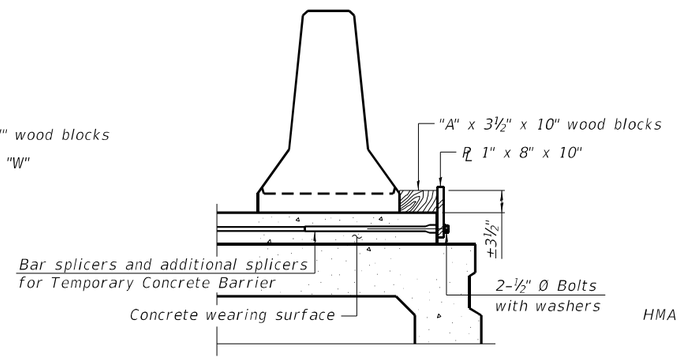


## DETAIL II

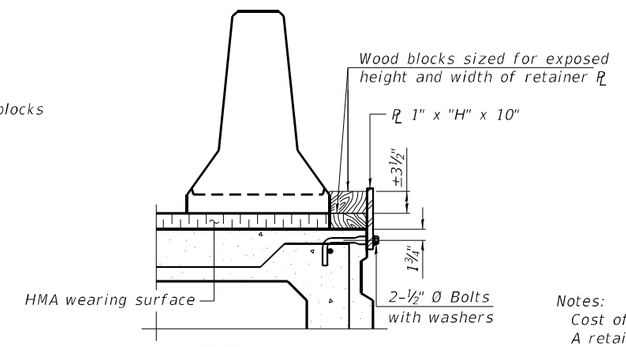


## DETAIL III

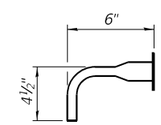


## BAR SPLICER FOR #4 BAR - DETAIL III

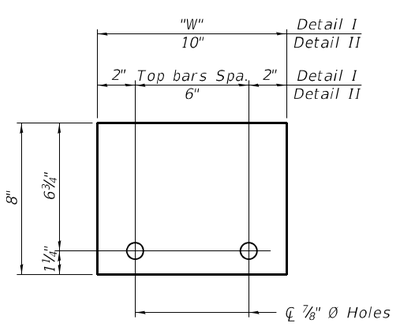


## STEEL RETAINER PL 1" x 8" x "W"

(Detail I and II)

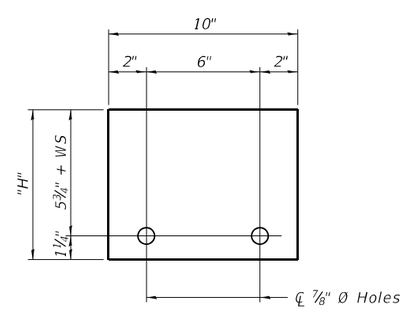


## STEEL RETAINER PL 1" x "H" x 10"

(Detail III)

Notes:

Cost of retainer assembly is included with Temporary Concrete Barrier.

A retainer assembly shall be located at the approximate ℄ of each temporary concrete barrier.

The retainer plate shall not be removed until the concrete on the adjacent stage is ready to be poured. For Detail III applications the retainer plate shall not be removed until just prior to placing the adjacent beam.

When the 'A' dimension is less than 1½", the wood block shall be omitted and the barrier shall be placed in direct contact with the steel retainer plate. For deck beam applications the minimum required 'A' distance is 6" to accommodate the shear key clamping device.

Detail I - Installation for a new bridge deck or bridge slab.

Detail II - Installation for a new deck beam with an initial concrete wearing surface. Additional bar splicers shall be provided at 6'-0" centers and paired with the bar splicers of the concrete wearing surface reinforcement to accommodate the installation of the retainer assemblies. The cost of the additional bar splicers is included with the concrete wearing surface.

Detail III - Installation for a new deck beam with no initial wearing surface or with an initial hot-mix asphalt (HMA) wearing surface present. The deck beam directly beneath the temporary concrete barrier shall be fabricated with bar splicer inserts in the side of the beam, as detailed, to accommodate the installation of the retainer assemblies. A pair of bar splicers, 6" apart, shall be placed at 6'-0" centers along the length of the beam. The cost of the bar splicers is included with the deck beam.

R-27

8-11-2017

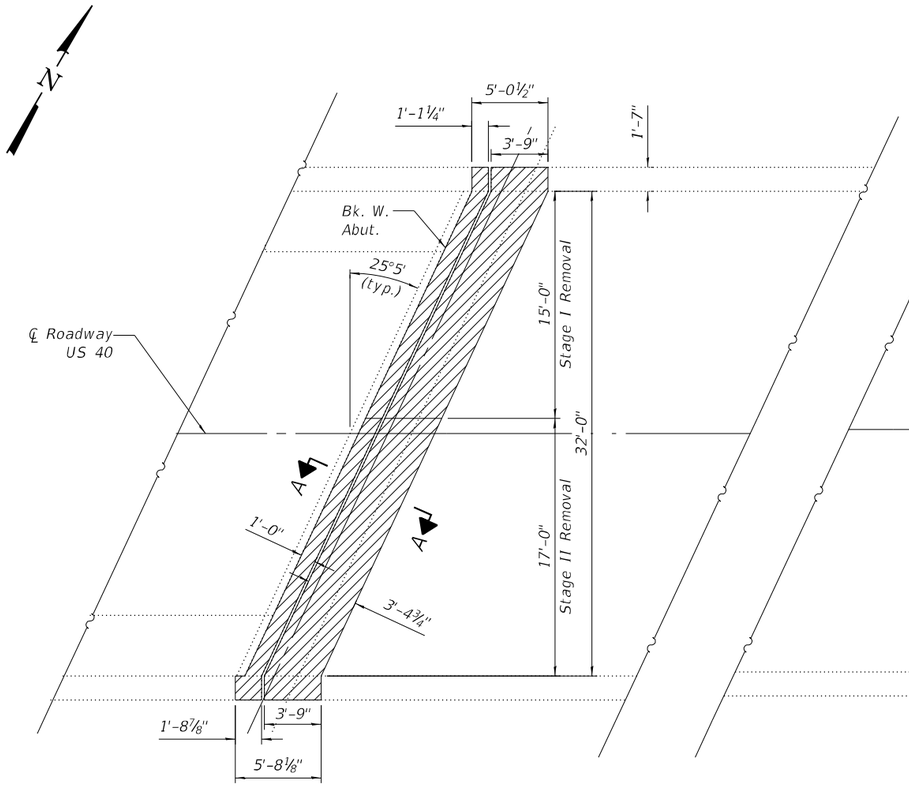


## PLAN
(West Abutment - Showing Concrete Removal)

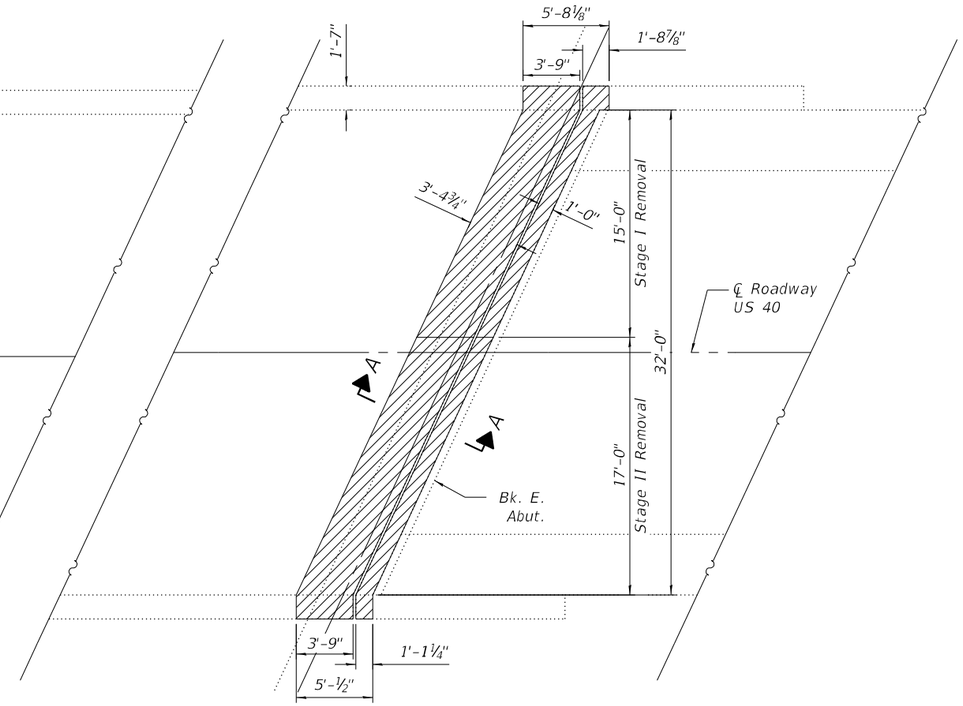


## PLAN
(East Abutment - Showing Concrete Removal)

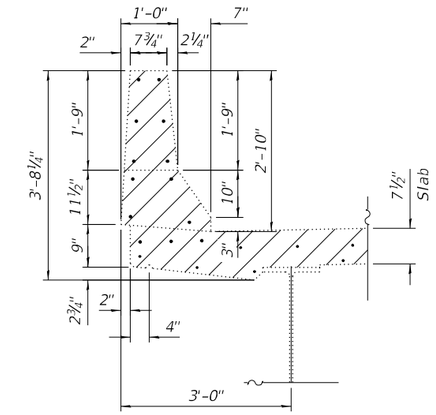


## SECTION THRU PARAPET

## BILL OF MATERIAL

| Item | Unit | Total |
|---|---|---|
| Concrete Removal | Cu. Yd. | 7.7 |
| | | |

Notes:

The Contractor shall use extreme care during concrete removal so as not to damage the existing steel beams. Any steel damaged during concrete removal operations shall be repaired at the Contractor's expense.

Removal of existing expansion joint and associated material shall not be paid for separately, but shall be included in the cost of Concrete Removal.

Existing reinforcement bars extending into the removal area shall be cleaned, straightened and incorporated into new construction. Any reinforcement bars that are damaged during concrete removal operations shall be replaced at the Contractor's expense.

Stud shear connectors damaged during concrete removal operations shall be removed and replaced per Section 505 of the Standard Specifications at the Contractor's expense.

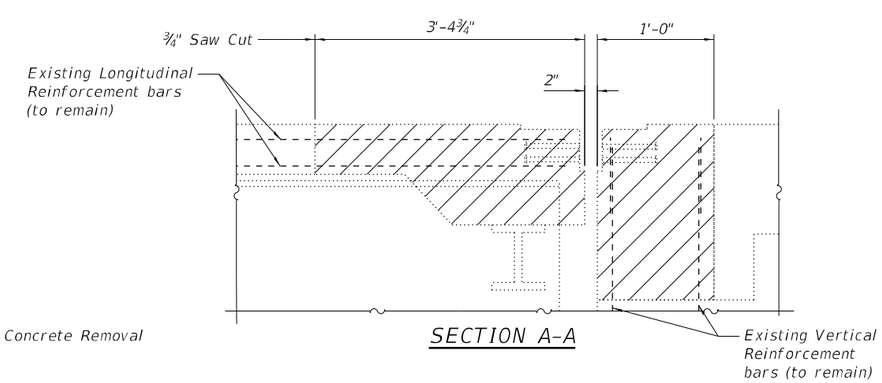


## SECTION A-A

Indicates Concrete Removal

MODEL: Default
FILE NAME: P:\19-1141.01 IDOT 003-0018 003-0019 Rehabs\0_IDOT\Structures\003-0019\0030019-76K46-004-Superstructure Concrete Removal.dgn

05/12/22 3:21:06 PM

Kaskaskia Engineering Group, LLC
200 E. Main St., Suite 100
Belleville, Illinois 62220
618.233.5877 phone
618.233.5975 fax
www.KaskaskiaEng.com
PROFESSIONAL ENGINEERING
Illinois Professional Design Firm
Professional Engineering Group
LICENSE NO.
184.001773
20-5880105

| | | | |
|---|---|---|---|
| USER NAME = | DESIGNED - MLC | REVISED - | |
| | CHECKED - JW | REVISED - | |
| PLOT SCALE = | DRAWN - MLC | REVISED - | |
| PLOT DATE = | CHECKED - JW | REVISED - | |

**STATE OF ILLINOIS**
**DEPARTMENT OF TRANSPORTATION**

**CONCRETE REMOVAL DETAILS**
**STRUCTURE NO. 003-0019**

SHEET 4 OF 16 SHEETS

| F.A.S. RTE. | SECTION | COUNTY | TOTAL SHEETS | SHEET NO. |
|---|---|---|---|---|
| 1751 | (Q-1, X-1, F-1)RS-2, Q-1VBDR-1 | BOND | 113 | 99 |
| | | CONTRACT NO. 76K46 | | |
| | | ILLINOIS | FED. AID PROJECT | |

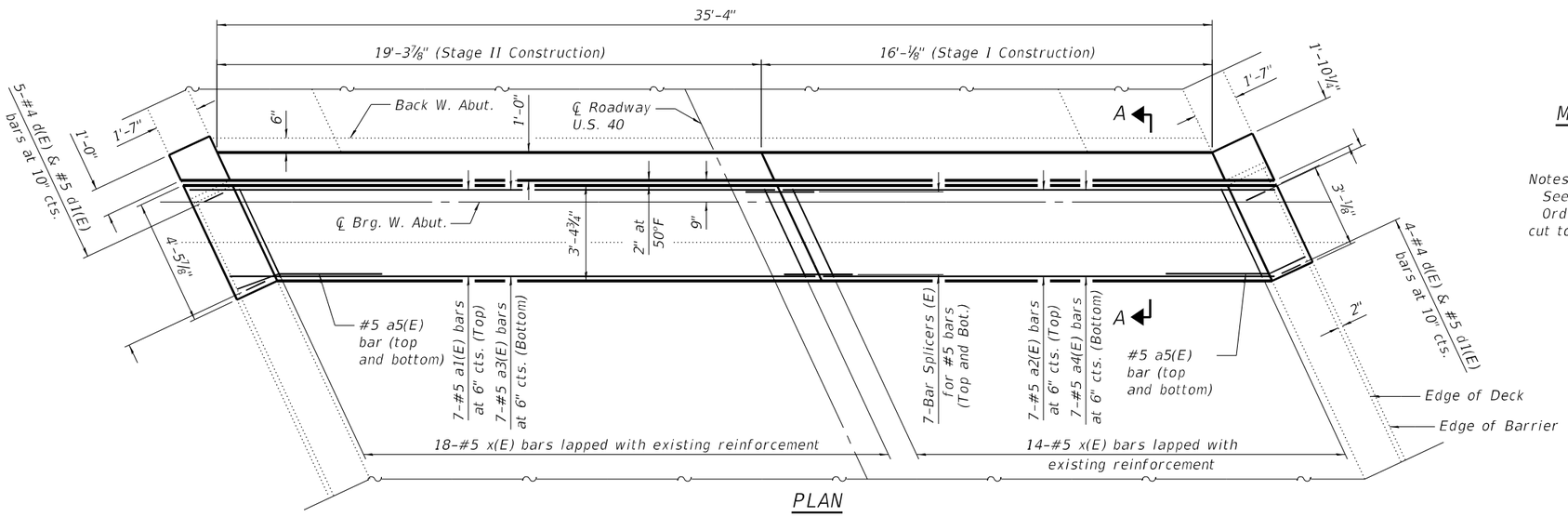


## PLAN

(Showing West Abutment)

## MINIMUM BAR LAP

#5 bar = 3'-6"

Notes:
See Sheet 6 of 16 for Section A-A.
Order a1(E) and a2(E) bars full-length and cut to fit in the field.

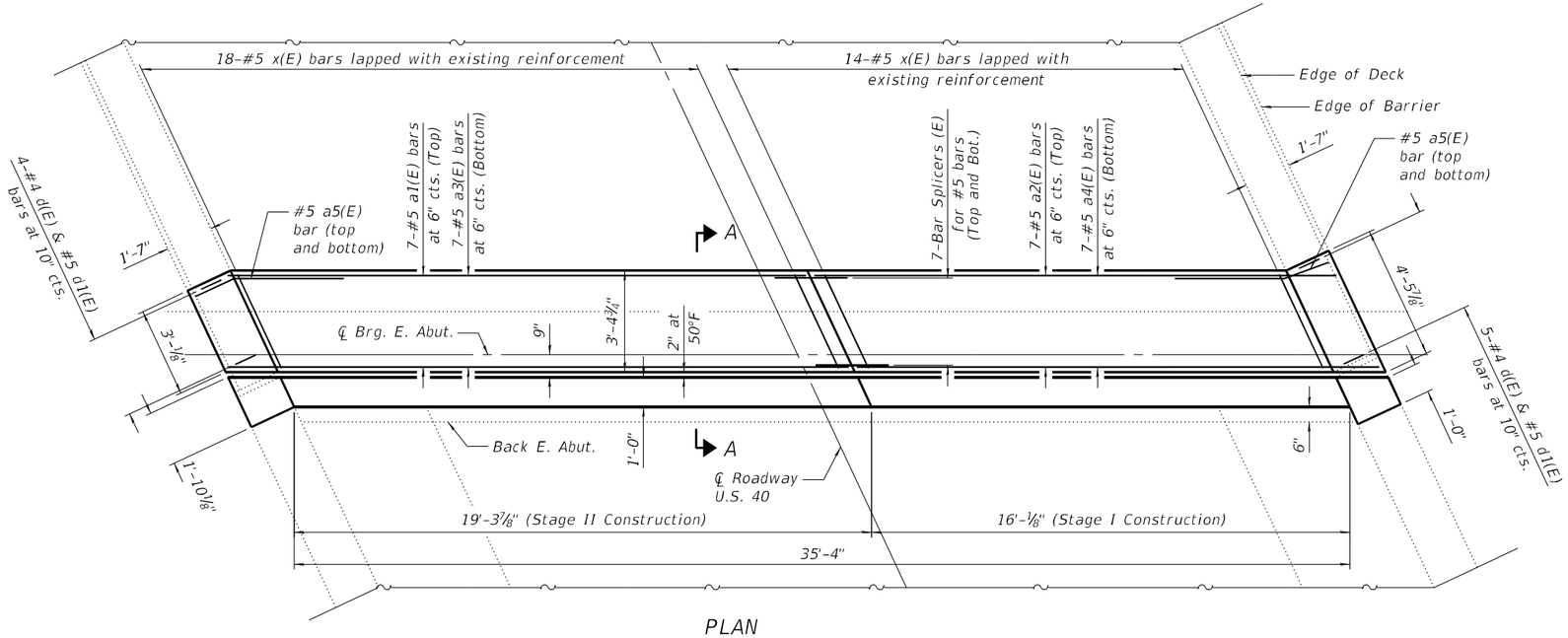


## PLAN

(Showing East Abutment)

MODEL: Default
FILE NAME: P:\19-1141.01 IDOT 003-0018 003-0019 Rehabs\0_IDOT\Structures\003-0019\0030019-76K46-005-Superstructure Plan.dgn
05/12/22 3:21:07 PM

Kaskaskia Engineering Group, LLC
PROFESSIONAL DESIGN FIRMS
Illinois Professional Design Firm: 184.001751
Professional Engineering Group LICENSE NO. 245: 20-5000166
200 E. Main St., Suite 100, Belleville, Illinois 62220
618.233.5977 phone
618.233.5977 fax
www.kaskaskiieng.com

| | | | |
|---|---|---|---|
| USER NAME = | DESIGNED - MLC | REVISED - | |
| | CHECKED - JW | REVISED - | |
| PLOT SCALE = | DRAWN - MLC | REVISED - | |
| PLOT DATE = | CHECKED - JW | REVISED - | |

**STATE OF ILLINOIS**
**DEPARTMENT OF TRANSPORTATION**

**SUPERSTRUCTURE**
**STRUCTURE NO. 003-0019**

SHEET 5 OF 16 SHEETS

| F.A.S. RTE. | SECTION | COUNTY | TOTAL SHEETS | SHEET NO. |
|---|---|---|---|---|
| 1751 | (Q-1, X-1, F-1)RS-2, Q-1VBDR-1 | BOND | 113 | 100 |
| | | CONTRACT NO. 76K46 | | |
| | ILLINOIS | FED. AID PROJECT | | |

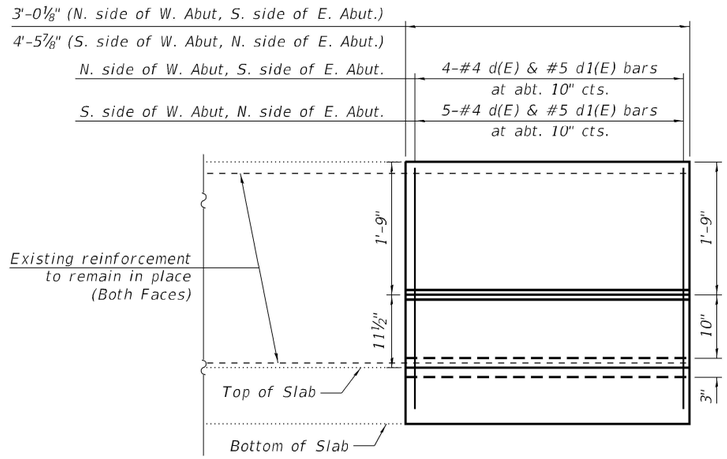


## Outside Elevation

(South Parapet - East Abutment shown, others similar)

## BILL OF MATERIAL

| Bar | No. | Size | Length | Shape |
|---|---|---|---|---|
| a1(E) | 14 | #5 | 20'-9" | |
| a2(E) | 14 | #5 | 17'-5" | |
| a3(E) | 14 | #5 | 20'-3" | |
| a4(E) | 14 | #5 | 16'-11" | |
| a5(E) | 8 | #5 | 5'-1" | |
| | | | | |
| d(E) | 18 | #4 | 5'-2" | |
| d1(E) | 18 | #5 | 3'-11" | |
| | | | | |
| x(E) | 64 | #5 | 4'-1" | |
| | | | | |
| Concrete Superstructure | | | Cu. Yd. | 7.7 |
| Reinforcement Bars, Epoxy Coated | | | Pound | 1,560 |
| Hot-Mix Asphalt Surface Course, IL-9.5FG, Mix "D", N70 | | | Ton | 39 |

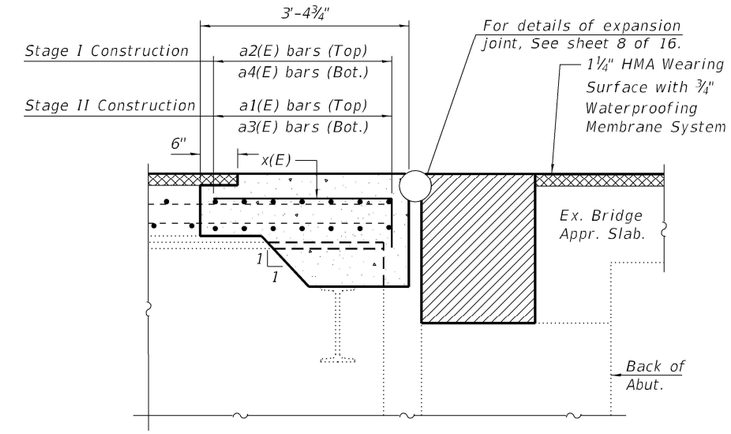


## SECTION A-A

(at right angle)

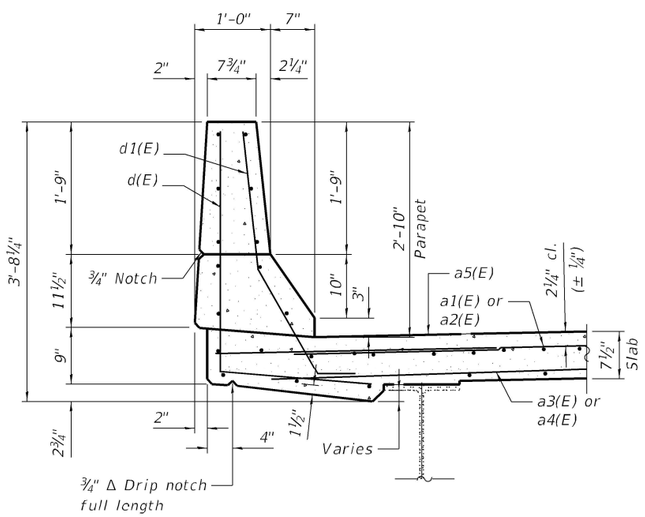


## SECTION THRU PARAPET

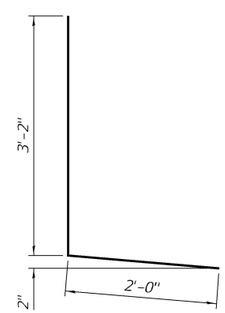


## BAR d(E)

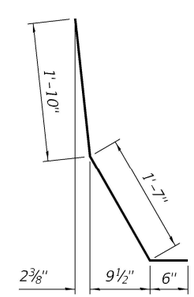


## BAR d1(E)

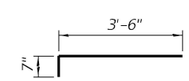


## BAR x(E)

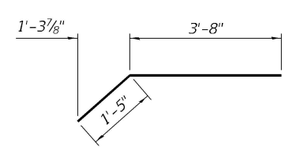


## BAR a5(E)

MODEL: Default
FILE NAME: P:\19-1141.01 IDOT 003-0018 003-0019 Rehabs\0_IDOT\Structures\003-0019\0030019-76K46-006-Superstructure Details.dgn
05/12/22 3:21:09 PM

Kaskaskia Engineering Group, LLC
PROFESSIONAL REGISTRATION: Illinois Professional Design Firm Professional Engineering Group
LICENSE NO. 184.001713 20-5000546

| | | | |
|---|---|---|---|
| USER NAME = | DESIGNED - MLC | REVISED - | |
| | CHECKED - JW | REVISED - | |
| PLOT SCALE = | DRAWN - MLC | REVISED - | |
| PLOT DATE = | CHECKED - JW | REVISED - | |

**STATE OF ILLINOIS**
**DEPARTMENT OF TRANSPORTATION**

**SUPERSTRUCTURE DETAILS**
**STRUCTURE NO. 003-0019**

SHEET 6 OF 16 SHEETS

| F.A.S. RTE. | SECTION | COUNTY | TOTAL SHEETS | SHEET NO. |
|---|---|---|---|---|
| 1751 | (Q-1, X-1, F-1)RS-2, Q-1VBDR-1 | BOND | 113 | 101 |
| | | CONTRACT NO. 76K46 | | |
| | ILLINOIS | FED. AID PROJECT | | |

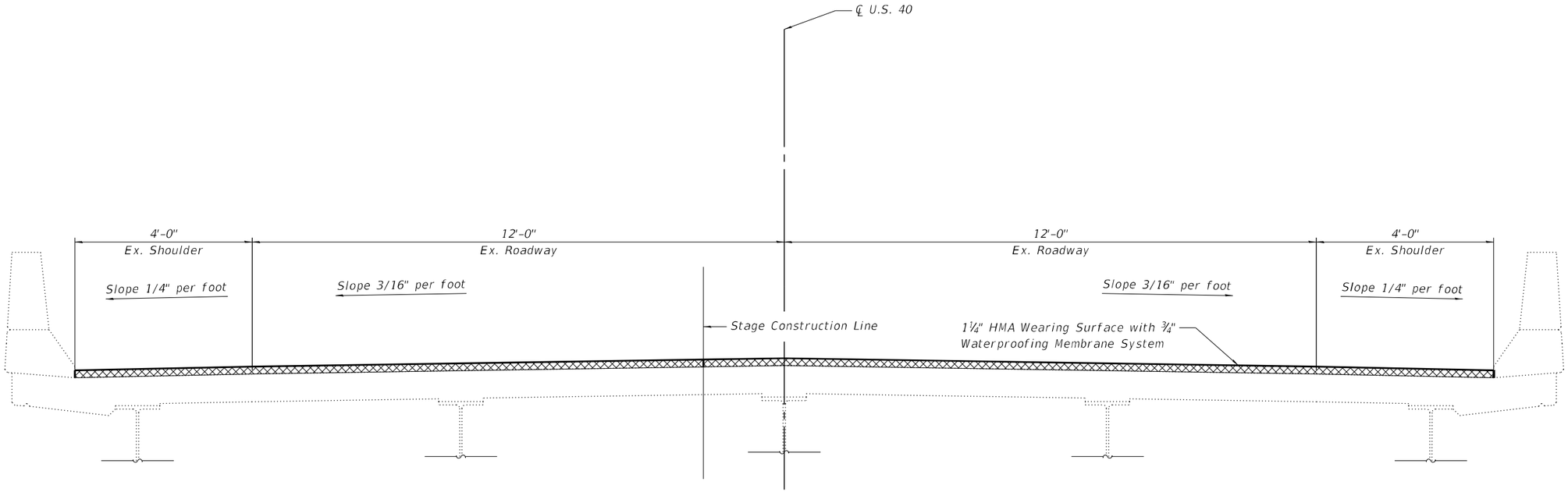


## SUPERSTRUCTURE TYPICAL SECTION

(Looking Upstation)

Notes:
See Roadway Plans for additional wearing surface details.

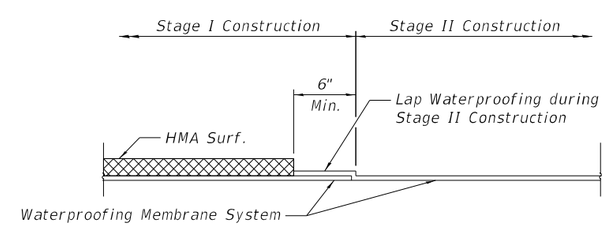


## WATERPROOFING TREATMENT AT STAGE CONSTRUCTION

MODEL: Default
FILE NAME: P:\19-1141.01 IDOT 003-0018 003-0019 Rehabs\0_IDOT\Structures\003-0019\0030019-76K46-007-Superstructure Typical Section.dgn
05/12/22 3:21:10 PM

Kaskaskia Engineering Group, LLC
PROFESSIONAL DESIGN FIRM: Illinois Professional Design Firm: Professional Engineering Group
LICENSE NO. 184.001773 20-5000186

| | | | |
|---|---|---|---|
| USER NAME = | DESIGNED - MLC | REVISED - | |
| | CHECKED - JW | REVISED - | |
| PLOT SCALE = | DRAWN - MLC | REVISED - | |
| PLOT DATE = | CHECKED - JW | REVISED - | |

**STATE OF ILLINOIS**
**DEPARTMENT OF TRANSPORTATION**

**SUPERSTRUCTURE TYPICAL SECTION**
**STRUCTURE NO. 003-0019**

SHEET 7 OF 16 SHEETS

| F.A.S. RTE. | SECTION | COUNTY | TOTAL SHEETS | SHEET NO. |
|---|---|---|---|---|
| 1751 | (Q-1, X-1, F-1)RS-2, Q-1VBDR-1 | BOND | 113 | 102 |
| | | CONTRACT NO. 76K46 | | |
| | ILLINOIS | FED. AID PROJECT | | |

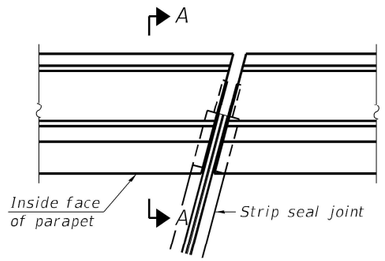


PLAN

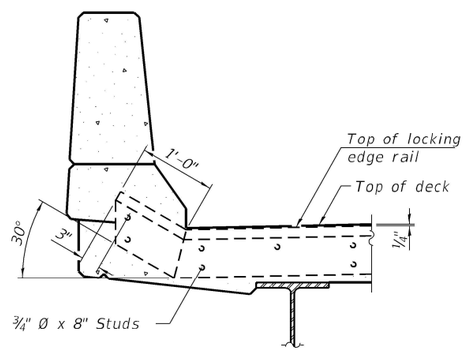


SECTION A-A

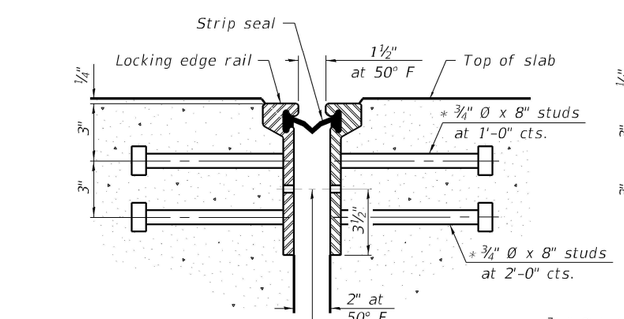


SECTION THRU
ROLLED RAIL JOINT

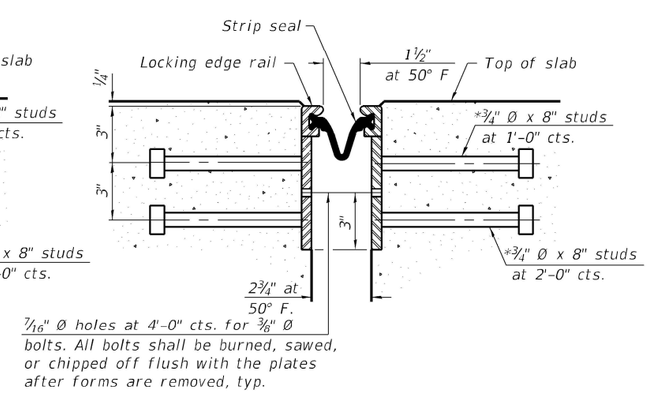


SECTION THRU
WELDED RAIL JOINT

* Granular or solid flux filled headed studs conforming to Article 1006.32 of the Std. Specs., automatically end welded.

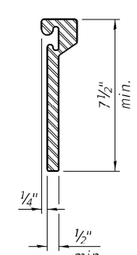


ROLLED
EXTRUDED RAIL

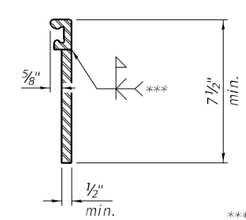


WELDED RAIL

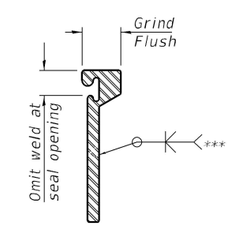


*** Back gouge not required if complete joint penetration is verified by mock-up.

LOCKING EDGE
RAIL SPLICE

The inside of the locking edge rail groove shall be free of weld residue.

Rolled rail shown, welded rail similar.

LOCKING EDGE RAILS

Notes:

The strip seal shall be made continuous and shall have a minimum thickness of ¼". The configuration of the strip seal shall match the configuration of the Locking Edge Rails. Open or "webbed" strip seal gland configurations are not permitted. The gland shall be sized for a maximum rated movement of 4 inches.

The Locking Edge Rails depicted are conceptual only, except for the minimum dimensions shown. The actual configuration of the Locking Edge Rails and matching strip seal may vary from manufacturer to manufacturer. Flanged edge rails will not be allowed. Locking Edge Rails may be spliced at slope discontinuities.

The manufacturer's recommended installation methods shall be followed.

The joint opening and deck dimensions detailed on the superstructure are based on a rolled rail expansion joint. If the Contractor elects to use the welded rail expansion joint, the opening and deck dimensions shall be modified according to the dimensions detailed on this sheet. Required modifications shall be made at no additional cost to the State.

All steel components shall be galvanized after fabrication according to Article 520.03 of the Standard Specifications.

Maximum space between rail segments shall be 3/16", sealed with a suitable sealant. Joints in rails within 10 ft. of curbs shall be welded.

BILL OF MATERIAL

| Item | Unit | Total |
|---|---|---|
| Preformed Joint Strip Seal | Foot | 75 |
| | | |

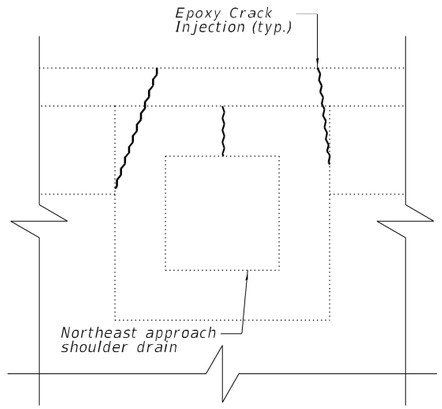


ELEVATION

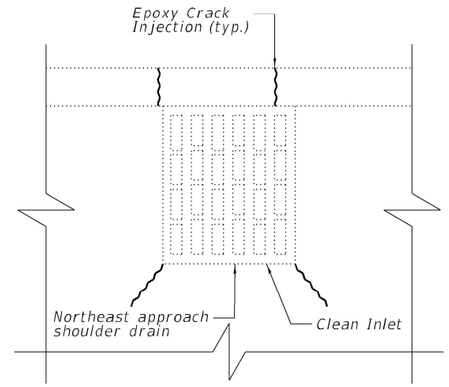


PLAN

## BILL OF MATERIAL

| ITEM | UNIT | TOTAL |
|---|---|---|
| Epoxy Crack Injection | FOOT | 5 |
| Cleaning Existing Inlets | EACH | 1 |
| | | |

Kaskaskia Engineering Group, LLC
PROFESSIONAL DESIGN FIRM
Illinois Professional Design Firm
Professional Engineering Group
LICENSE NO.
184.001773
20.5000505
200 E. Main St., Suite 100
Belleville, Illinois 62220
618.233.5877 phone
618.233.5877 fax
www.kaskaskieng.com

| | | | |
|---|---|---|---|
| USER NAME = | DESIGNED - MMC | REVISED - | |
| | CHECKED - JW | REVISED - | |
| PLOT SCALE = | DRAWN - MMC | REVISED - | |
| PLOT DATE = | CHECKED - JW | REVISED - | |

**STATE OF ILLINOIS**
**DEPARTMENT OF TRANSPORTATION**

**EAST APPROACH DRAIN REPAIRS**
**STRUCTURE NO. 003-0019**

SHEET 9 OF 16 SHEETS

| F.A.S. RTE. | SECTION | COUNTY | TOTAL SHEETS | SHEET NO. |
|---|---|---|---|---|
| 1751 | (Q-1, X-1, F-1)RS-2, Q-1VBDR-1 | BOND | 113 | 104 |
| | | CONTRACT NO. 76K46 | | |
| | ILLINOIS | FED. AID PROJECT | | |

MODEL: Default
FILE NAME: P:\19-1141.01 IDOT 003-0018 003-0019 Rehabs\0_IDOT\Structures\003-0019\0030019-76K46-009-East Approach Drain Repairs.dgn
05/12/22 3:21:12 PM

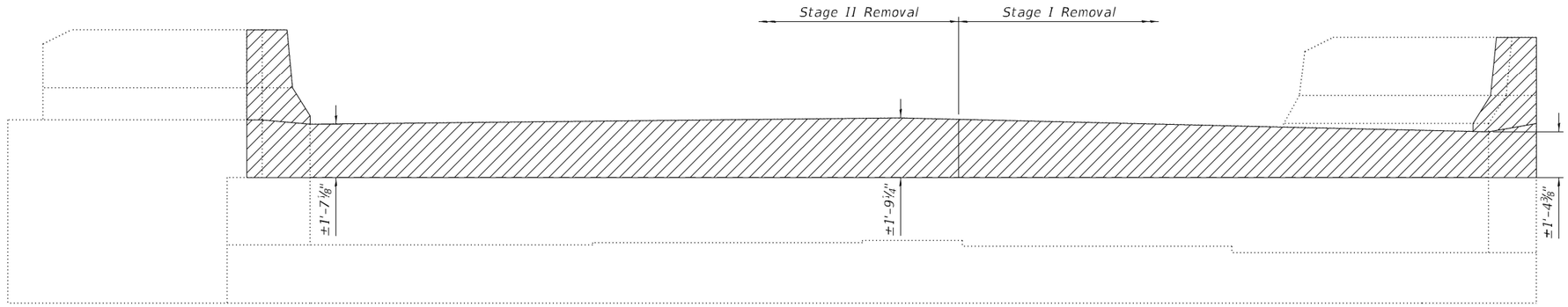


ELEVATION

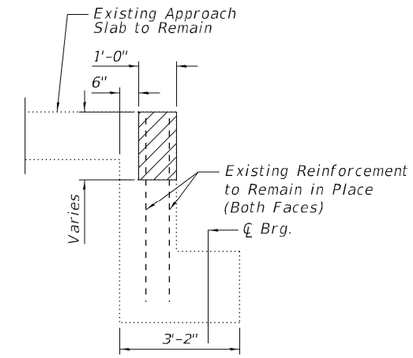


SECTION THRU ABUTMENT

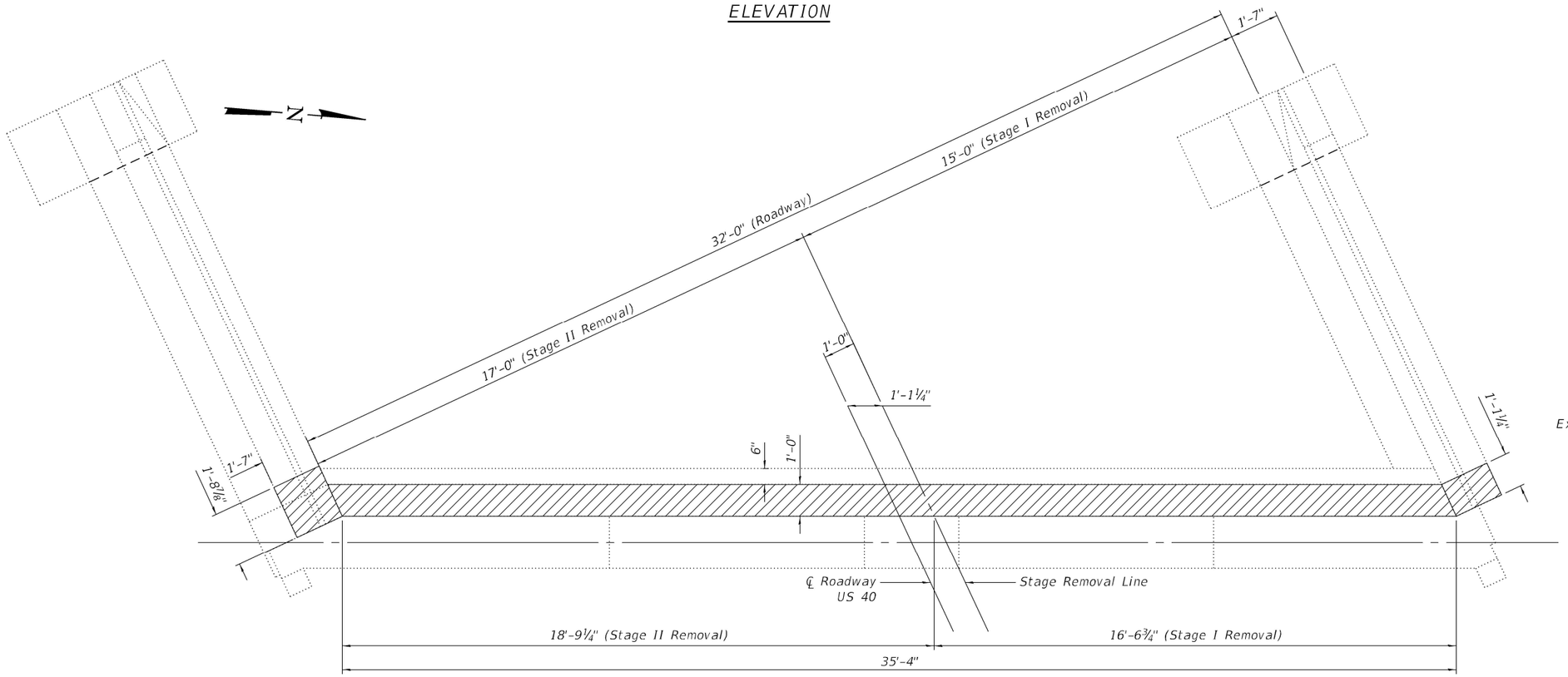


PLAN

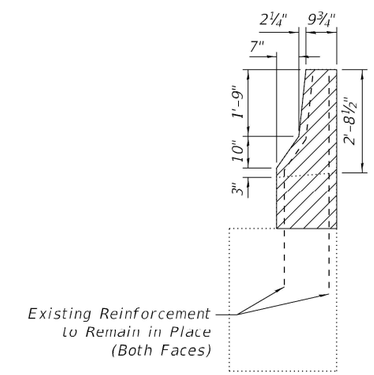


SECTIONS THRU WING WALL

(North Wing Wall Shown, South Similar)

- Indicates Limits of Concrete Removal

BILL OF MATERIAL

| ITEM | UNIT | TOTAL |
|---|---|---|
| Concrete Removal | Cu. Yd. | 2.7 |
| | | |
| | | |

MODEL: Default
FILE NAME: P:\19-1141.01 IDOT 003-0018 003-0019 Rehabs\0_IDOT\Structures\003-0019\0030019-76K46-010-West Abutment Concrete Removal.dgn

05/12/22 3:21:13 PM

Kaskaskia Engineering Group, LLC
PROFESSIONAL REGISTRATIONS: Illinois Professional Design Firm: Professional Engineering Group
LICENSE NO.: 184.006775 20.5880101

| | | | |
|---|---|---|---|
| USER NAME = | DESIGNED - MMC | REVISED - | |
| | CHECKED - JW | REVISED - | |
| PLOT SCALE = | DRAWN - MMC | REVISED - | |
| PLOT DATE = | CHECKED - JW | REVISED - | |

STATE OF ILLINOIS
DEPARTMENT OF TRANSPORTATION

WEST ABUTMENT CONCRETE REMOVAL
STRUCTURE NO. 003-0019

SHEET 10 OF 16 SHEETS

| F.A.S. RTE. | SECTION | COUNTY | TOTAL SHEETS | SHEET NO. |
|---|---|---|---|---|
| 1751 | (Q-1, X-1, F-1)RS-2, Q-1VBDR-1 | BOND | 113 | 105 |

CONTRACT NO. 76K46

ILLINOIS FED. AID PROJECT

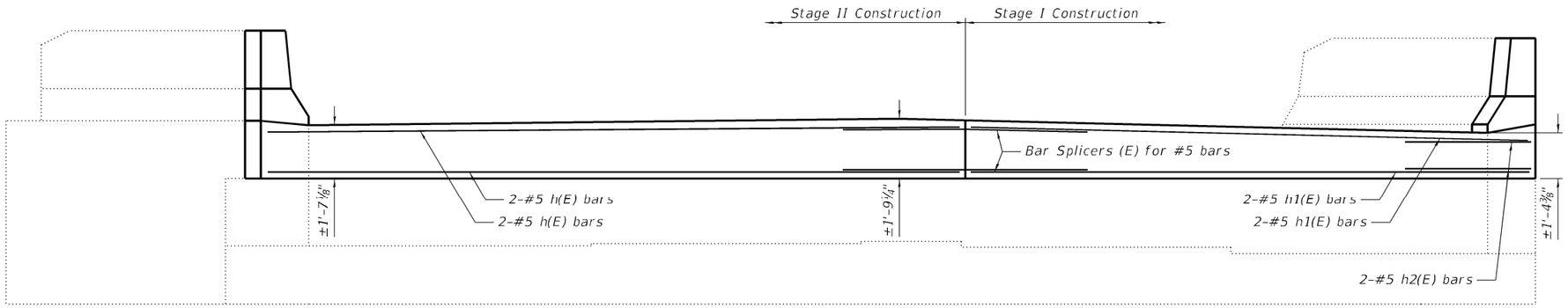


ELEVATION

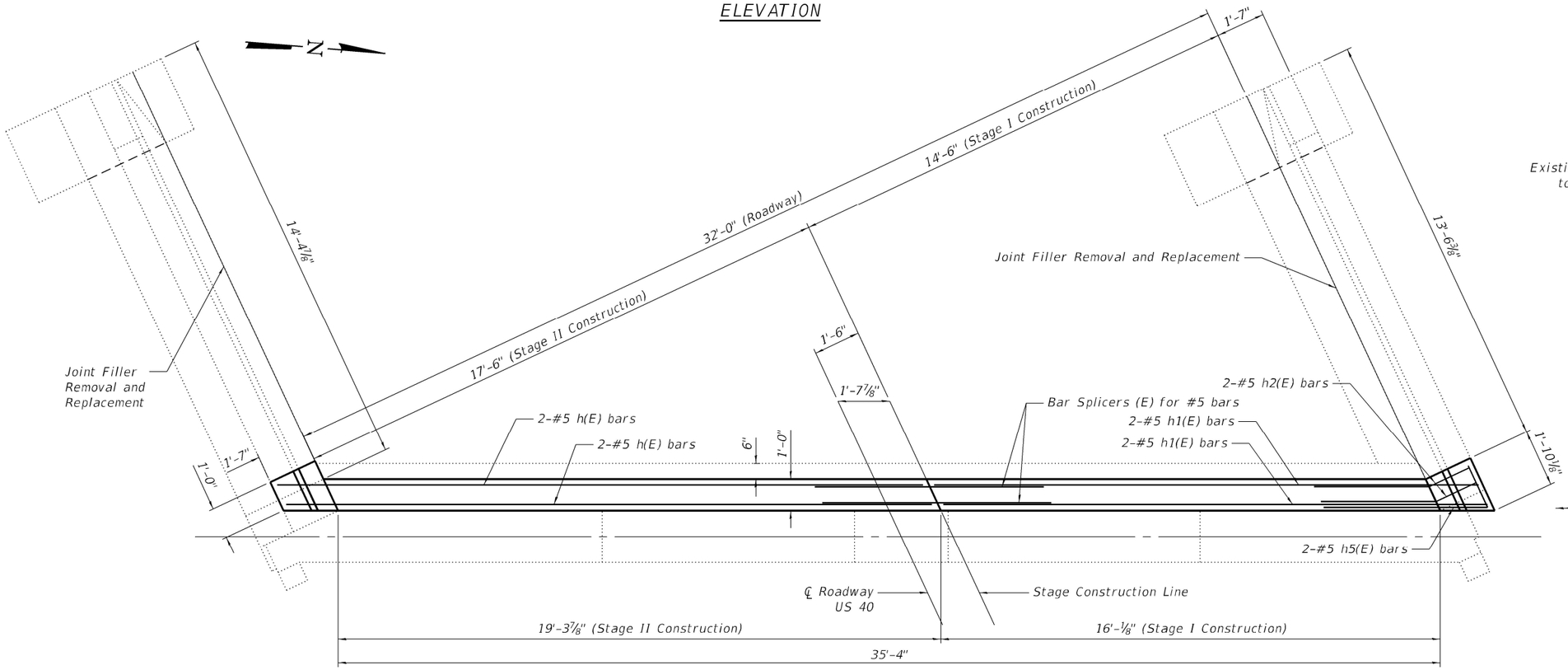


PLAN

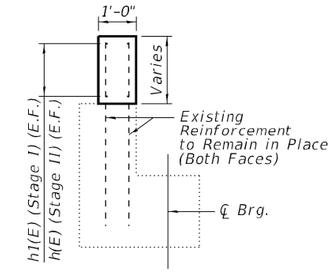


SECTION THRU ABUTMENT

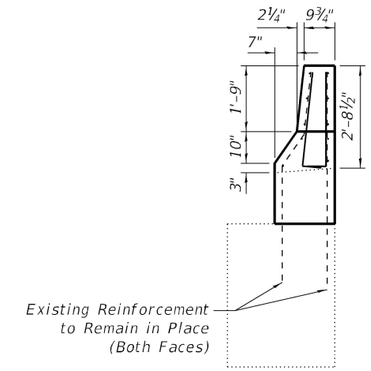


SECTIONS THRU WING WALL

(North Wing Wall Shown, South Similar)

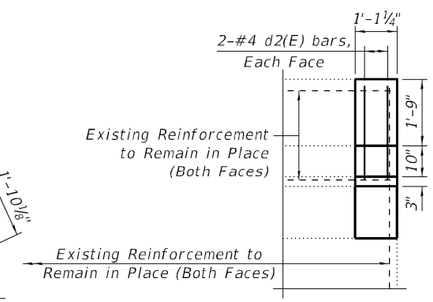


WING WALL ELEVATION

(North Wing Wall Shown, South Similar)

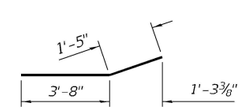


BAR h2(E)

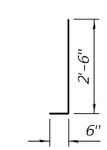


BAR d2(E)

## WEST ABUTMENT BILL OF MATERIAL

| Bar | No. | Size | Length | Shape |
|---|---|---|---|---|
| d2(E) | 8 | #4 | 3'-0" | |
| | | | | |
| h(E) | 4 | #5 | 20'-8" | |
| h1(E) | 4 | #5 | 17'-5" | |
| h2(E) | 4 | #5 | 5'-1" | |
| h5(E) | 2 | #5 | 6'-8" | |
| | | | | |
| Concrete Structures | | | Cu. Yd. | 2.7 |
| Reinforcement Bars, Epoxy Coated | | | Pound | 220 |
| Replace Joint Filler | | | Foot | 28 |

MODEL: Default
FILE NAME: P:\19-1141.01 IDOT 003-C018 003-0019 Rehabs\0_IDOT\Structures\003-0019\0030019-76K46-011-West Abutment Concrete Repair.dgn

05/12/22 3:21:14 PM

Kaskaskia Engineering Group, LLC
PROFESSIONAL REGISTRATIONS
Illinois Professional Design Firm 184.001773
Professional Engineering Group 20-5000185
LICENSE NO.
700 E. Morris St., Suite 100
Bethalto, Illinois 62010
618.258.0477 Voice
618.258.0477 Fax
www.kaskaskiaeng.com

| | | | |
|---|---|---|---|
| USER NAME = | DESIGNED - MMC | REVISED - | |
| | CHECKED - JW | REVISED - | |
| PLOT SCALE = | DRAWN - MMC | REVISED - | |
| PLOT DATE = | CHECKED - JW | REVISED - | |

**STATE OF ILLINOIS**
**DEPARTMENT OF TRANSPORTATION**

**WEST ABUTMENT PLAN & ELEVATION**
**STRUCTURE NO. 003-0019**

SHEET 11 OF 16 SHEETS

| F.A.S. RTE. | SECTION | COUNTY | TOTAL SHEETS | SHEET NO. |
|---|---|---|---|---|
| 1751 | (Q-1, X-1, F-1)RS-2, Q-1VBDR-1 | BOND | 113 | 106 |
| | | CONTRACT NO. 76K46 | | |
| | | ILLINOIS | FED. AID PROJECT | |

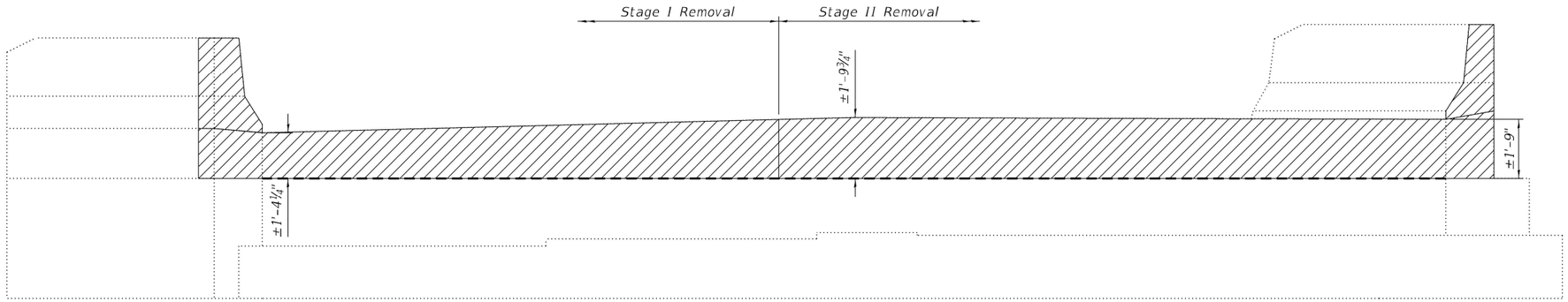


ELEVATION

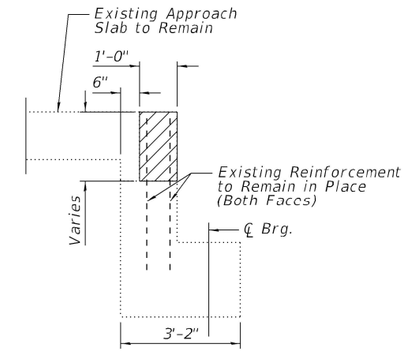


SECTION THRU ABUTMENT

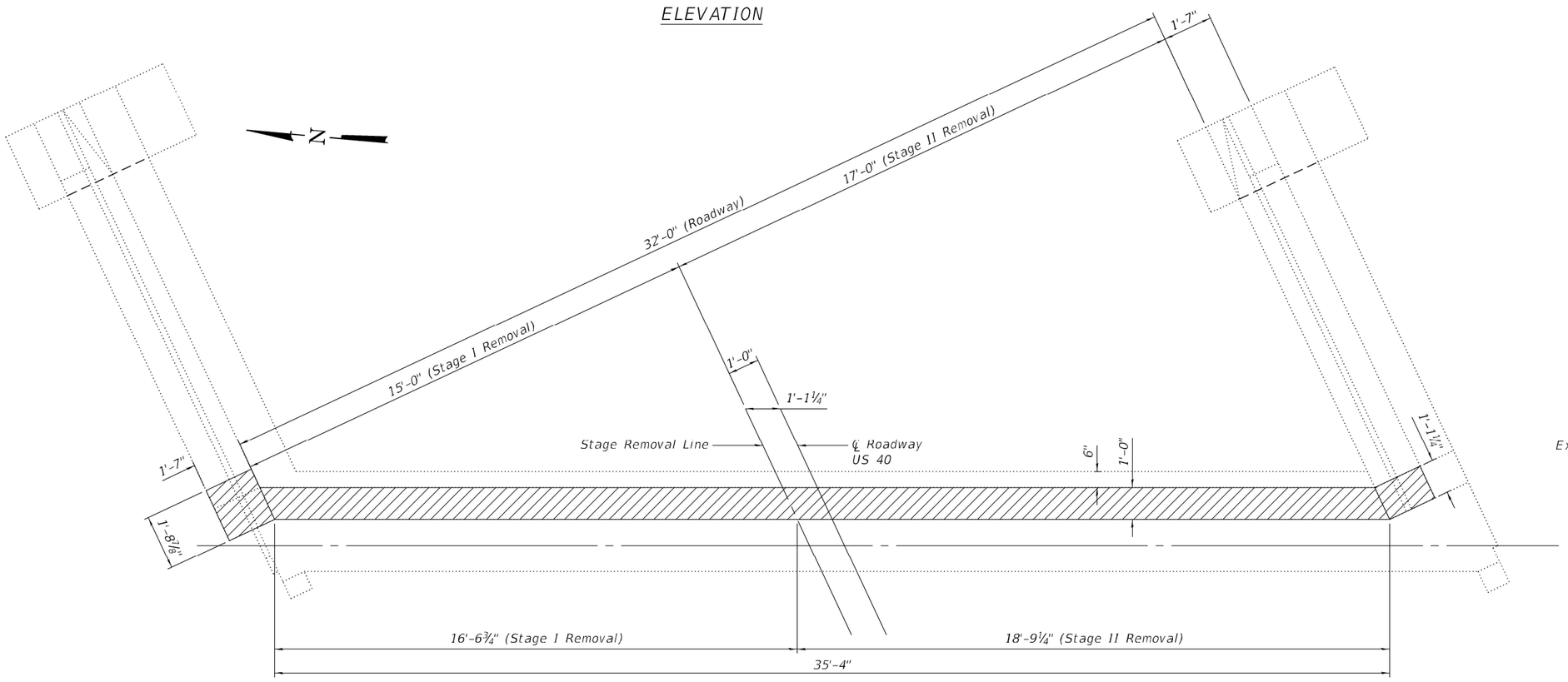


PLAN

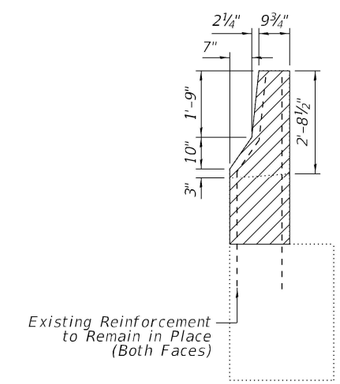


SECTIONS THRU WING WALL

(South Wing Wall Shown, North Similar)

– Indicates Limits of Concrete Removal

BILL OF MATERIAL

| ITEM | UNIT | TOTAL |
|---|---|---|
| Concrete Removal | Cu. Yd. | 2.7 |
| | | |
| | | |

MODEL: Default
FILE NAME: P:\19-1141.01 IDOT 003-0018 003-0019 Rehabs\0_IDOT\Structures\003-0019\0030019-76K46-012-East Abutment Concrete Removal.dgn

05/12/22 3:21:15 PM

Kaskaskia Engineering Group, LLC
200 E. Main St., Suite 100
Belleville, Illinois 62220
618.233.5877 phone
618.233.5877 fax
www.kaskaskiaeng.com
REGISTERED ILLINOIS CORPORATION
Illinois Professional Design Firm
Professional Engineering Group
LICENSE No.
184.001773
20.5000166

| | | | |
|---|---|---|---|
| USER NAME = | DESIGNED - MMC | REVISED - | |
| | CHECKED - JW | REVISED - | |
| PLOT SCALE = | DRAWN - MMC | REVISED - | |
| PLOT DATE = | CHECKED - JW | REVISED - | |

STATE OF ILLINOIS
DEPARTMENT OF TRANSPORTATION

EAST ABUTMENT CONCRETE REMOVAL
STRUCTURE NO. 003-0019

SHEET 12 OF 16 SHEETS

| F.A.S. RTE. | SECTION | COUNTY | TOTAL SHEETS | SHEET NO. |
|---|---|---|---|---|
| 1751 | (Q-1, X-1, F-1)RS-2, Q-1VBDR-1 | BOND | 113 | 107 |
| | | CONTRACT NO. 76K46 | | |
| | ILLINOIS | FED. AID PROJECT | | |

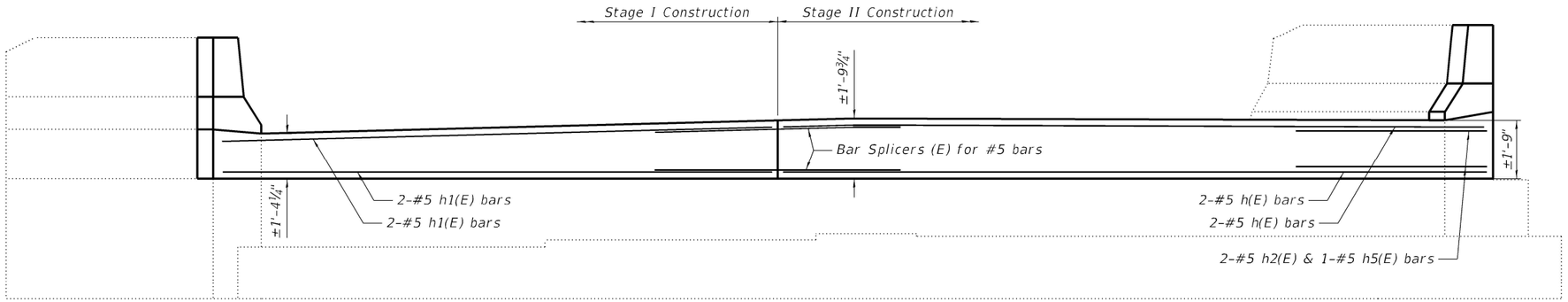


ELEVATION

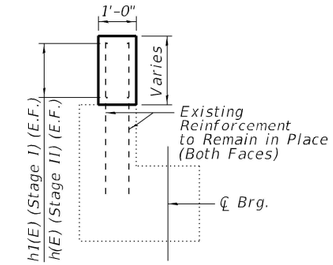


SECTION THRU ABUTMENT

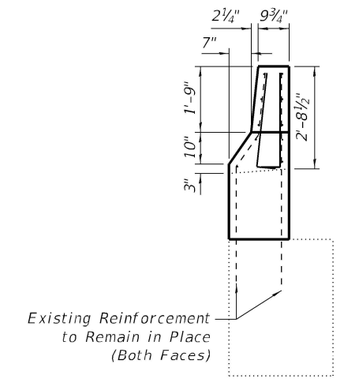


SECTIONS THRU WING WALL

(South Wing Wall Shown, North Similar)

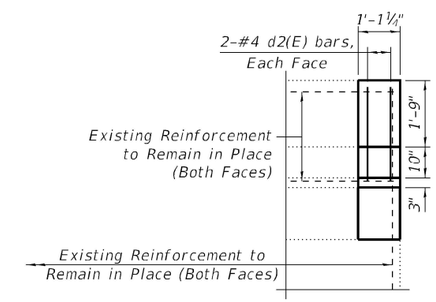


WING WALL ELEVATION

(South Wing Wall Shown, North Similar)

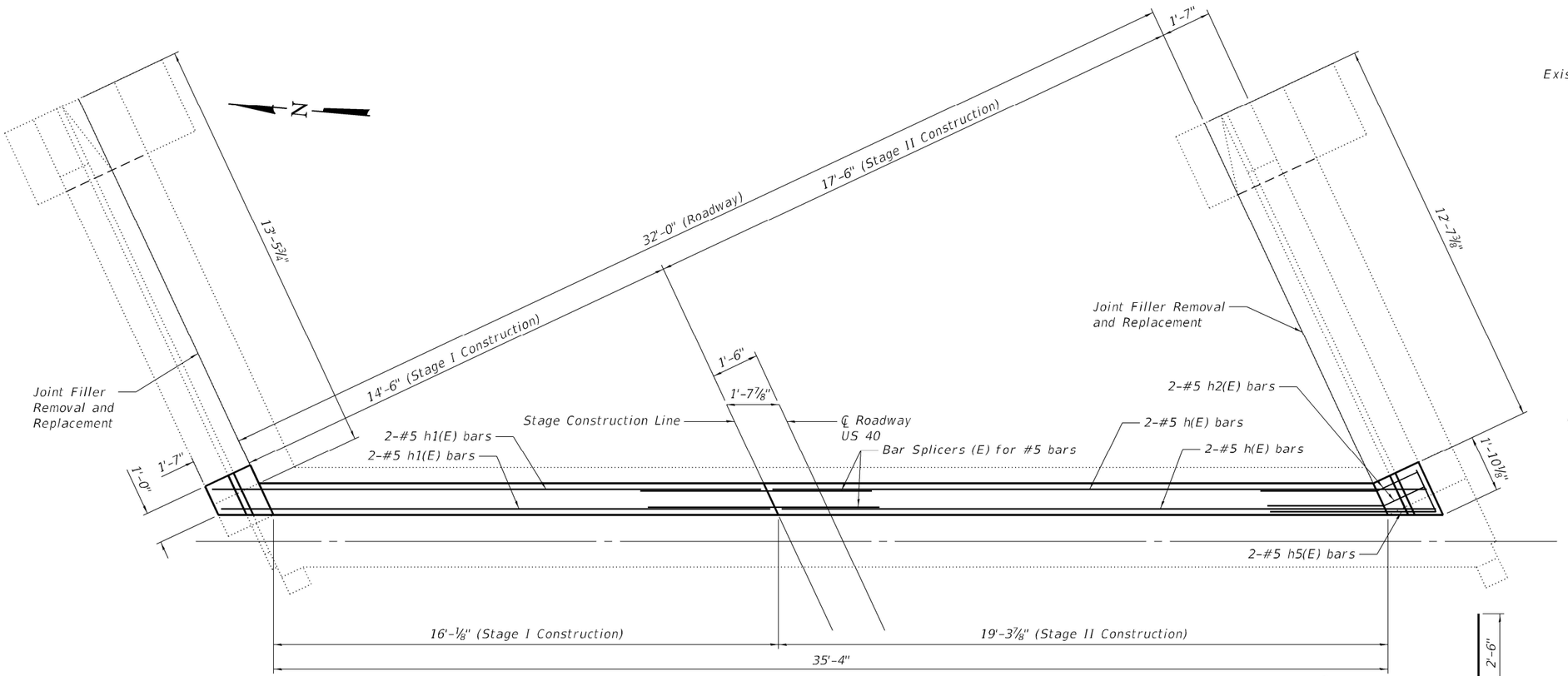


PLAN

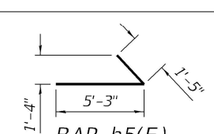


BAR h5(E)

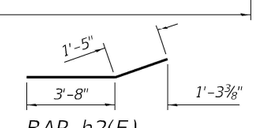


BAR h2(E)

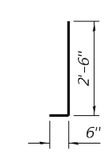


BAR d2(E)

## EAST ABUTMENT BILL OF MATERIAL

| Bar | No. | Size | Length | Shape |
|---|---|---|---|---|
| d2(E) | 8 | #4 | 3'-0" | |
| | | | | |
| h(E) | 4 | #5 | 20'-8" | |
| h1(E) | 4 | #5 | 17'-5" | |
| h2(E) | 4 | #5 | 5'-1" | |
| h5(E) | 2 | #5 | 6'-8" | |
| | | | | |
| Concrete Structures | | | Cu. Yd. | 2.7 |
| Reinforcement Bars, Epoxy Coated | | | Pound | 220 |
| Replace Joint Filler | | | Foot | 27 |

MODEL: Default
FILE NAME: P:\19-1141.01 IDOT 003-0018 003-0019 Rehabs\0_IDOT\Structures\003-0019\0030019-76K46-013-East Abutment Concrete Repair.dgn
05/12/22 3:21:16 PM

Kaskaskia Engineering Group, LLC
PROFESSIONAL DESIGN FIRMS
Illinois Professional Design Firm
Professional Engineering Group
LICENSE NO.
184.001753
20-5000586

| USER NAME = | DESIGNED - MMC | REVISED - |
|---|---|---|
| | CHECKED - JW | REVISED - |
| PLOT SCALE = | DRAWN - MMC | REVISED - |
| PLOT DATE = | CHECKED - JW | REVISED - |

**STATE OF ILLINOIS**
**DEPARTMENT OF TRANSPORTATION**

**EAST ABUTMENT PLAN & ELEVATION**
**STRUCTURE NO. 003-0019**

SHEET 13 OF 16 SHEETS

| F.A.S. RTE. | SECTION | COUNTY | TOTAL SHEETS | SHEET NO. |
|---|---|---|---|---|
| 1751 | (Q-1, X-1, F-1)RS-2, Q-1VBDR-1 | BOND | 113 | 108 |
| | | CONTRACT NO. 76K46 | | |
| | ILLINOIS | FED. AID PROJECT | | |

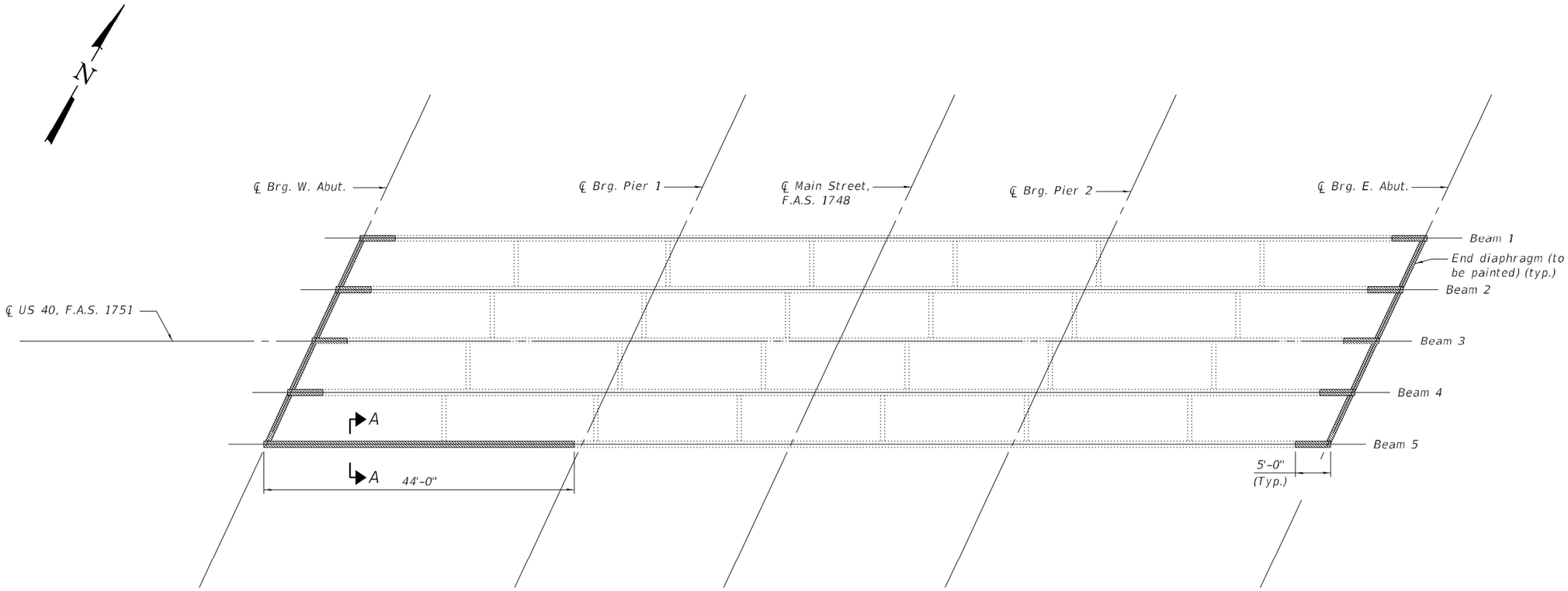


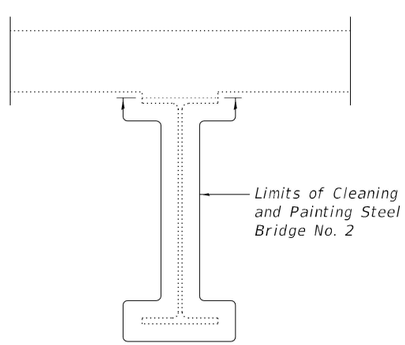


SECTION A-A

Indicates limits of Cleaning and Painting Steel Bridge No. 2

Notes:
1. See General Notes for additional painting requirements.
2. Cleaning and Painting Steel Bridge No. 2 shall include the beam ends and end diaphragms.
3. The area of steel to be painted is approximately 1,100 square feet.
4. For plan of existing steel, see Sheet 16 of 16.

MODEL: Default
FILE NAME: P:\19-1141.01 IDOT 003-0018 003-0019 Rehabs\0_IDOT\Structures\003-0019\0030019-76K46-014-PAINT DETAILS.dgn
05/12/22 3:21:17 PM

Kaskaskia Engineering Group, LLC
PROFESSIONAL SPECIFICATIONS
Illinois Professional Design Firm: 184.001910
Professional Engineering Group: 20-3000186
LICENSE NO.
200 E. Main St., Suite 100
Belleville, Illinois 62220
Phone: 618.233.5922
618.233.5977 fax
www.kaskaskiaeng.com

| | | | | | |
|---|---|---|---|---|---|
| USER NAME = | DESIGNED - MLC | REVISED - | STATE OF ILLINOIS DEPARTMENT OF TRANSPORTATION | EXISTING STEEL CLEANING & PAINTING DETAILS STRUCTURE NO. 003-0019 | |
| | CHECKED - JW | REVISED - | | | |
| PLOT SCALE = | DRAWN - MLC | REVISED - | | | |
| PLOT DATE = | CHECKED - JW | REVISED - | | SHEET 14 OF 16 SHEETS | |

| F.A.S. RTE. | SECTION | COUNTY | TOTAL SHEETS | SHEET NO. |
|---|---|---|---|---|
| 1751 | (Q-1, X-1, F-1)RS-2, Q-1VBDR-1 | BOND | 113 | 109 |
| | | CONTRACT NO. 76K46 | | |
| | ILLINOIS | FED. AID PROJECT | | |

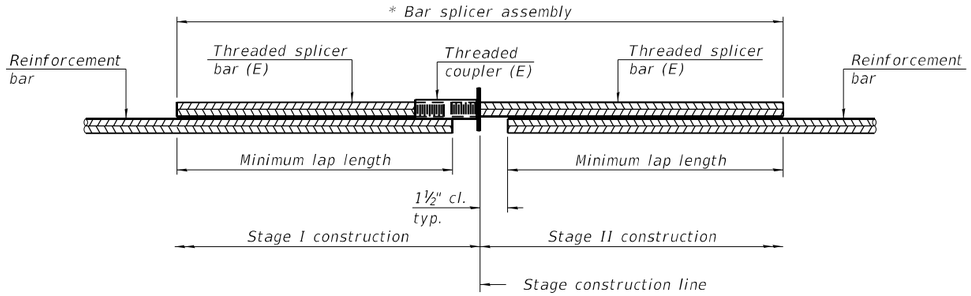


## STANDARD BAR SPLICER ASSEMBLY PLAN

(All components shall be provided from one supplier)

Threaded splicer bar length = min. lap length + 1½" + thread length

* Epoxy not required on Bar Splicer Assembly components used in conjunction with black bars.

| Location | Bar size | No. assemblies required | Minimum lap length |
|---|---|---|---|
| West Abutment | #5 | 4 | 3'-6" |
| East Abutment | #5 | 4 | 3'-6" |
| Deck | #5 | 28 | 3'-6" |
| | | | |
| | | | |

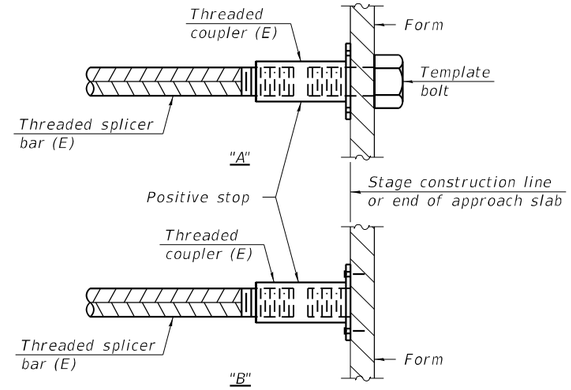


## INSTALLATION AND SETTING METHODS

"A" : Set bar splicer assembly by means of a template bolt.
"B" : Set bar splicer assembly by nailing to wood forms or cementing to steel forms.
(E) : Indicates epoxy coating.

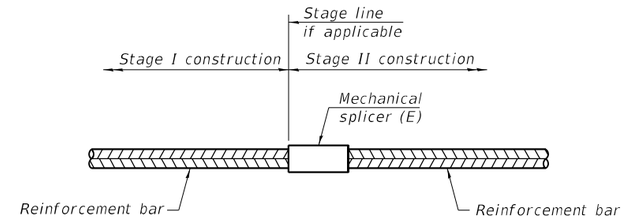


## STANDARD MECHANICAL SPLICER

| Location | Bar size | No. assemblies required |
|---|---|---|
| | | |
| | | |
| | | |
| | | |
| | | |

Notes:
Splicer bars shall be deformed with threaded ends and have a minimum 60 ksi yield strength.
All reinforcement shall be lapped and tied to the splicer bars.
Bar splicer assemblies shall be epoxy coated according to the requirements for reinforcement bars. See Section 508 of the Standard Specifications.
See approved list of bar splicer assemblies and mechanical splicers for alternatives.

BSD-1 1-1-2020

MODEL: Default
FILE NAME: P:\19-1141.01 IDOT 003-0018 003-0019 Rehabs\0_IDOT\Structures\003-0019\0030019-76K46-015-Bar-Splices.dgn

Kaskaskia Engineering Group, LLC
PROFESSIONAL DESIGN FIRM
Illinois Professional Design Firm
Professional Engineering Group
200 E. Main St., Suite 100
Belleville, Illinois 62220
618.233.5677 phone
618.233.5677 fax
www.kaskaskiaeng.com
LICENSE NO.
184.001773
EXPIRES
20.000000

| | | | |
|---|---|---|---|
| USER NAME = | DESIGNED - MLC | REVISED - | |
| | CHECKED - JW | REVISED - | |
| PLOT SCALE = | DRAWN - MLC | REVISED - | |
| PLOT DATE = | CHECKED - JW | REVISED - | |

STATE OF ILLINOIS
DEPARTMENT OF TRANSPORTATION

BAR SPLICER ASSEMBLY AND MECHANICAL SPLICER DETAILS
STRUCTURE NO. 003-0019

SHEET 15 OF 16 SHEETS

| F.A.S. RTE. | SECTION | COUNTY | TOTAL SHEETS | SHEET NO. |
|---|---|---|---|---|
| 1751 | (Q-1, X-1, F-1)RS-2, Q-1VBDR-1 | BOND | 113 | 110 |
| | | CONTRACT NO. 76K46 | | |
| | ILLINOIS | FED. AID PROJECT | | |

05/12/22 3:21:18 PM

STATE OF ILLINOIS
DEPARTMENT OF TRANSPORTATION

| ROUTE NO. | SECTION | COUNTY | TOTAL SHEETS | SHEET NO. |
|---|---|---|---|---|
| FAS 1748 | Q-1 HBR | BOND | 38 | 28 |

SHEET NO. 7 / 14 SHEETS

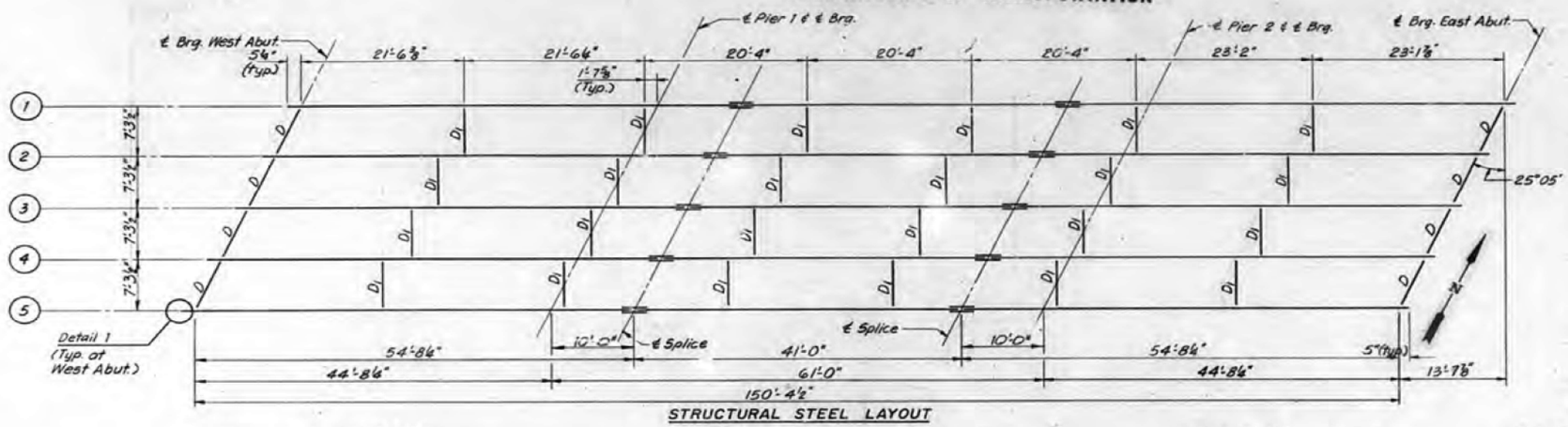


STRUCTURAL STEEL LAYOUT

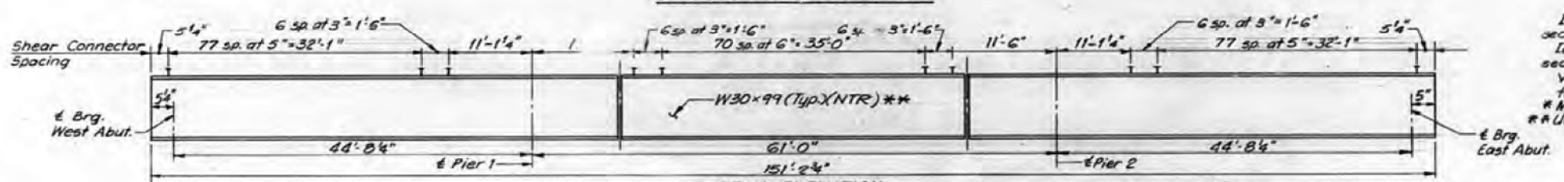


BEAM ELEVATION
** M223 - Grade 50
Note: N.T.R. denotes member subject to Notch Toughness Requirements.

Note:
All splice plate material shall be M223 (Grade 50) steel and shall conform to notch toughness requirements.

INTERIOR GIRDER MOMENTS

| | 0.4 Span 1 or 3 | Pier 1 or 2 | 0.5 Span 2 |
|---|---|---|---|
| $I_s$ (in.⁴) | 3990 | 3990 | 3990 |
| $I_c$ (in.⁴) | 11750 | — | 11750 |
| $S_s$ (in.³) | 269 | 269 | 269 |
| $S_c$ (in.³) | 413 | — | 413 |
| $D_L$ (k/′) | .810 | 1.174 | .810 |
| $M_{DL}$ ('k) | 97.4 | 316.6 | 140.4 |
| $S_{DL}$ ('k) | .364 | — | .364 |
| $M_{SDL}$ ('k) | 52.6 | — | 84.5 |
| $M_{LL}$ (k/′) | 302.6 | 177.6 | 393.0 |
| $M_{IMP}$ ('k) | 85.1 | 50.0 | 110.6 |
| 5/6(MLL+I)('k) | 646.2 | 379.3 | 839.3 |
| Ma ('k) | 1035.1 | 904.7 | 1383.5 |
| * Mu ('k) | 2475 | | 2475 |
| fs (for comp)(ksi) | 4.35 | 14.12 | 6.76 |
| fs (comp)(ksi) | 1.46 | — | 2.35 |
| fs (LL+I)(ksi) | 17.99 | 16.92 | 23.37 |
| fs (overload)(ksi) | 23.80 | 31.04 | 32.48 |
| ** fs (Total)(ksi) | | 40.38 | |
| VR (k) | 55.5 | — | 48.1 |

Is and Ss are the moment of inertia and section modulus of the steel section used in computing fs (Total and overload)
Ic and Sc are the moment of inertia and section modulus of the composite section used in computing fs (overload)
VR is the maximum Live Load + impact shear range in span.
fs (Total) is the sum of the stresses due to $1.3[M_{DL} + M_{SDL} + \frac{5}{6}(M_{LL} + I)]$.
* Moment capacity for unbraced section
** Unbraced section.

INTERIOR GIRDER REACTIONS

| | Abutments | Piers |
|---|---|---|
| $R_{DL}$ (k) | 18.8 | 68.5 |
| $R_{LL}$ (k) | 36.6 | 44.4 |
| $R_{IMP}$ (k) | 10.8 | 12.5 |
| $R_{TOT}$ (k) | 66.2 | 125.4 |

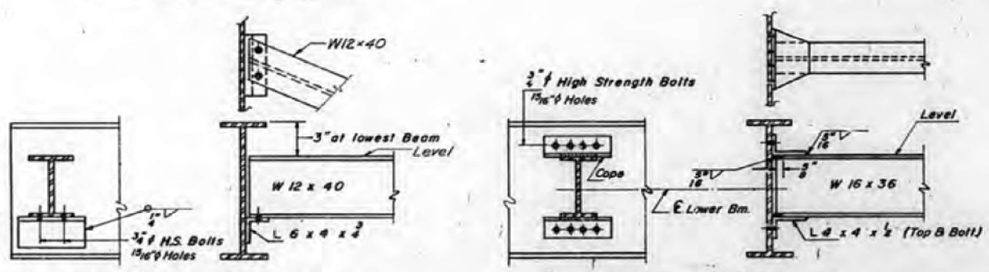


DIAPHRAGM D
8 Required

DIAPHRAGM D1
24 Required

Note: Two hardened washers shall be required over all 13/16" ϕ holes in diaphragm connections.

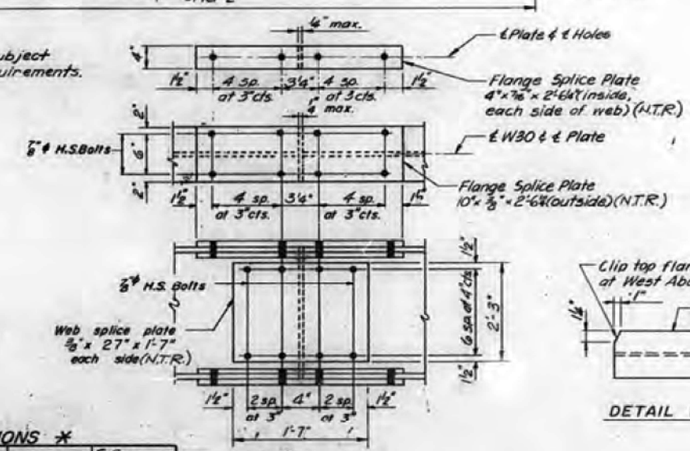


SPLICE

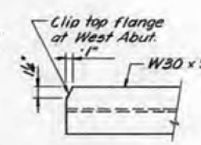


DETAIL 1

¾"ϕ Granular or solid flux filled headed studs automatically end welded to flange (No. req'd. = 2,510)

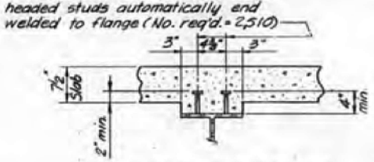


SHEAR STUD DETAILS

TOP OF GIRDER ELEVATIONS *

| Girder | ℄ Brg. W. Abut. | Pier 1 | Span 2 Splice 1 | Span 2 Splice 2 | Pier 2 | ℄ Brg. E. Abut. |
|---|---|---|---|---|---|---|
| 1 | 574.990 | 574.138 | 573.946 | 573.117 | 572.904 | 571.947 |
| 2 | 575.174 | 574.330 | 574.139 | 573.316 | 573.105 | 572.155 |
| 3 | 575.345 | 574.507 | 574.318 | 573.501 | 573.292 | 572.348 |
| 4 | 575.288 | 574.456 | 574.269 | 573.458 | 573.250 | 572.313 |
| 5 | 575.217 | 574.392 | 574.206 | 573.401 | 573.195 | 572.265 |

* for fabrication only - does not include dead load deflections.

All structural steel fabricators performing work on the main load carrying components of steel structures shall be certified under Category I (A.I.S.C.) of the Quality Certification Program.

| | |
|---|---|
| DESIGNED | C.L.M.W. |
| CHECKED | |
| DRAWN | R.G.Q. |
| CHECKED | |

I-2-D 8-30-80

STRUCTURAL STEEL LAYOUT
FAS Rte. 1748 (U.S. Rte. 40)
over MAIN STREET
SECTION Q-1 HBR
BOND COUNTY
STA. 13+64.27
STRUCTURE NO. 003-0019

FOR INFORMATION ONLY

MODEL: Default
FILE NAME: P:\19-1141.01 IDOT 003-0018 003-0019 Rehabs\0_IDOT\Structures\003-0019\0030019-76K46-016-Exis. Plans.dgn
05/12/22 3:21:19 PM

Kaskaskia Engineering Group, LLC
PROFESSIONAL REGISTRATIONS: Illinois Professional Design Firm; Professional Engineering Group
LICENSE NO. 184.001932; 20-3686886

| | | | |
|---|---|---|---|
| USER NAME = | DESIGNED - MLC | REVISED - | STATE OF ILLINOIS DEPARTMENT OF TRANSPORTATION |
| | CHECKED - JW | REVISED - | |
| PLOT SCALE = | DRAWN - MLC | REVISED - | |
| PLOT DATE = | CHECKED - JW | REVISED - | |

EXISTING PLANS
STRUCTURE NO. 003-0019
SHEET 16 OF 16 SHEETS

| F.A.S. RTE. | SECTION | COUNTY | TOTAL SHEETS | SHEET NO. |
|---|---|---|---|---|
| 1751 | (Q-1, X-1, F-1)RS-2, Q-1VBDR-1 | BOND | 113 | 111 |

CONTRACT NO. 76K46
ILLINOIS FED. AID PROJECT

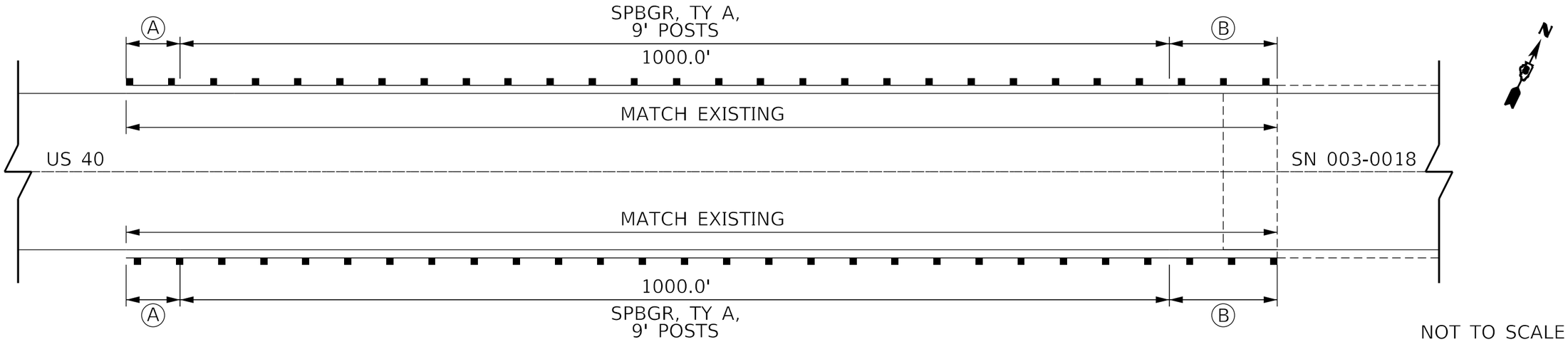


NOT TO SCALE

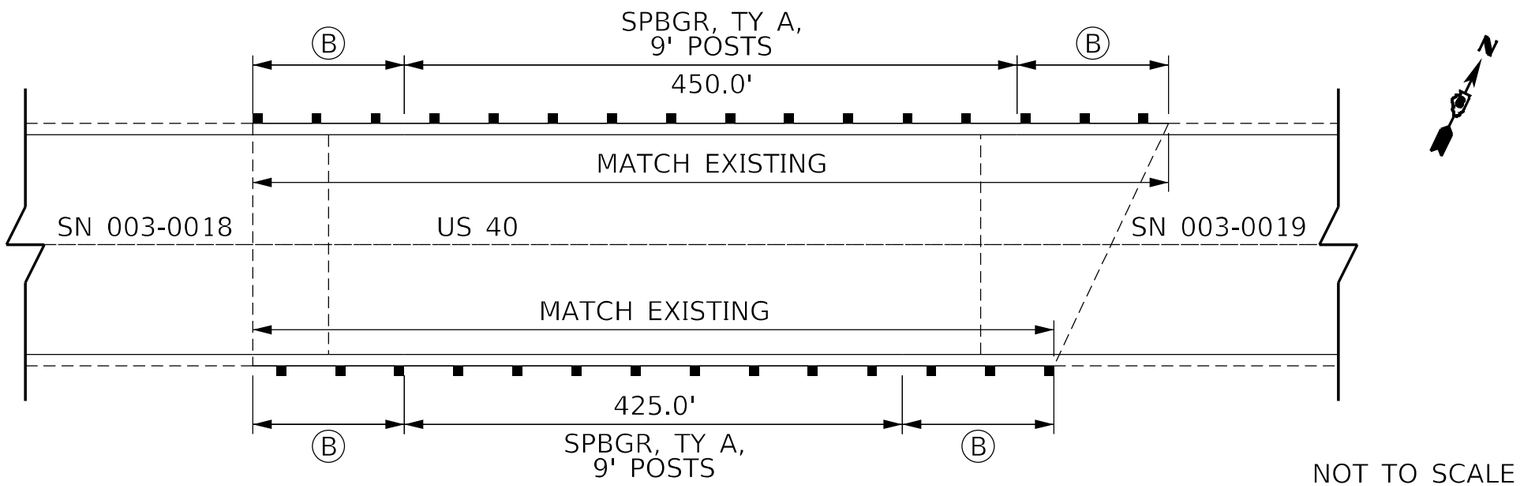


NOT TO SCALE

## LEGEND

Ⓐ TRAFFIC BARRIER TERMINAL, TYPE 1, (SPECIAL) TANGENT

Ⓑ TRAFFIC BARRIER TERMINAL, TYPE 6B

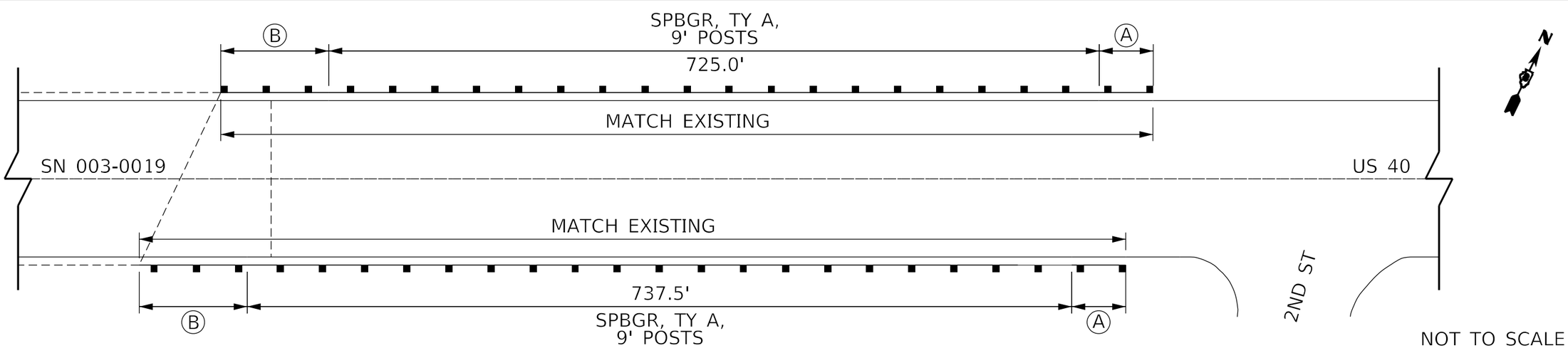


NOT TO SCALE

MODEL: Default
FILE NAME: pw:\\ildot-pw.bentley.com:PWIDOT\Documents\IDOT Offices\District 8\Projects\D876K46\CADData\CADsheets\D876K46-sht-dtls.dgn

| | | | |
|---|---|---|---|
| USER NAME = humphreysb | DESIGNED - | REVISED - | STATE OF ILLINOIS DEPARTMENT OF TRANSPORTATION |
| | DRAWN - | REVISED - | |
| PLOT SCALE = 40.0000 ' / in. | CHECKED - | REVISED - | |
| PLOT DATE = 5/13/2022 | DATE - | REVISED - | |

**GUARDRAIL DETAILS**

SCALE: NTS | SHEET 1 OF 1 SHEETS | STA. TO STA.

| **F.A. RTE. | SECTION | COUNTY | TOTAL SHEETS | SHEET NO. |
|---|---|---|---|---|
| ** | (Q-1,X-1,F-1)RS-2, Q-1VBDR-1 | BOND | 113 | 112 |
| **FAU 9832, FAS 1751 | | CONTRACT NO. 76K46 | | |
| | | ILLINOIS FED. AID PROJECT | | |

## NOTES

1. ALL SIGNS REQUIRED WILL BE SUPPLIED TO THE CONTRACTOR BY IDOT.
2. THE CONTRACTOR SHALL FURNISH THE POSTS AND ERECT SIGNS AT THE LOCATIONS SHOWN ON THIS SHEET, AS DIRECTED BY THE R.E./R.T. THE POSTS SHALL REMAIN THE PROPERTY OF THE CONTRACTOR.
3. THE CONTRACTOR SHALL GIVE ILLINOIS DEPARTMENT OF TRANSPORTATION, BUREAU OF OPERATIONS TWO WEEKS NOTICE FOR SIGNS. THE CONTRACTOR SHALL PICK UP THE SIGNS AT THE T.M. BUILDING IN FAIRVIEW HEIGHTS, AND RETURN THEM UPON COMPLETION OF THE CONTRACT. CONTACT JEAN SLAPE @ 394-2189.
4. THE ABOVE NOTED WORK SHALL BE PAID FOR AT THE CONTRACT UNIT PRICE, LUMP SUM, FOR WIDE LOAD SIGNING AND NO OTHER COMPENSATION WILL BE ALLOWED.
5. SIGN SPACING WILL BE 400 FEET OR TO FIT FIELD CONDITIONS.
6. THE HEIGHT TO THE BOTTOM OF THE LOWEST SIGN SHALL NOT BE LESS THAN 6 FEET.

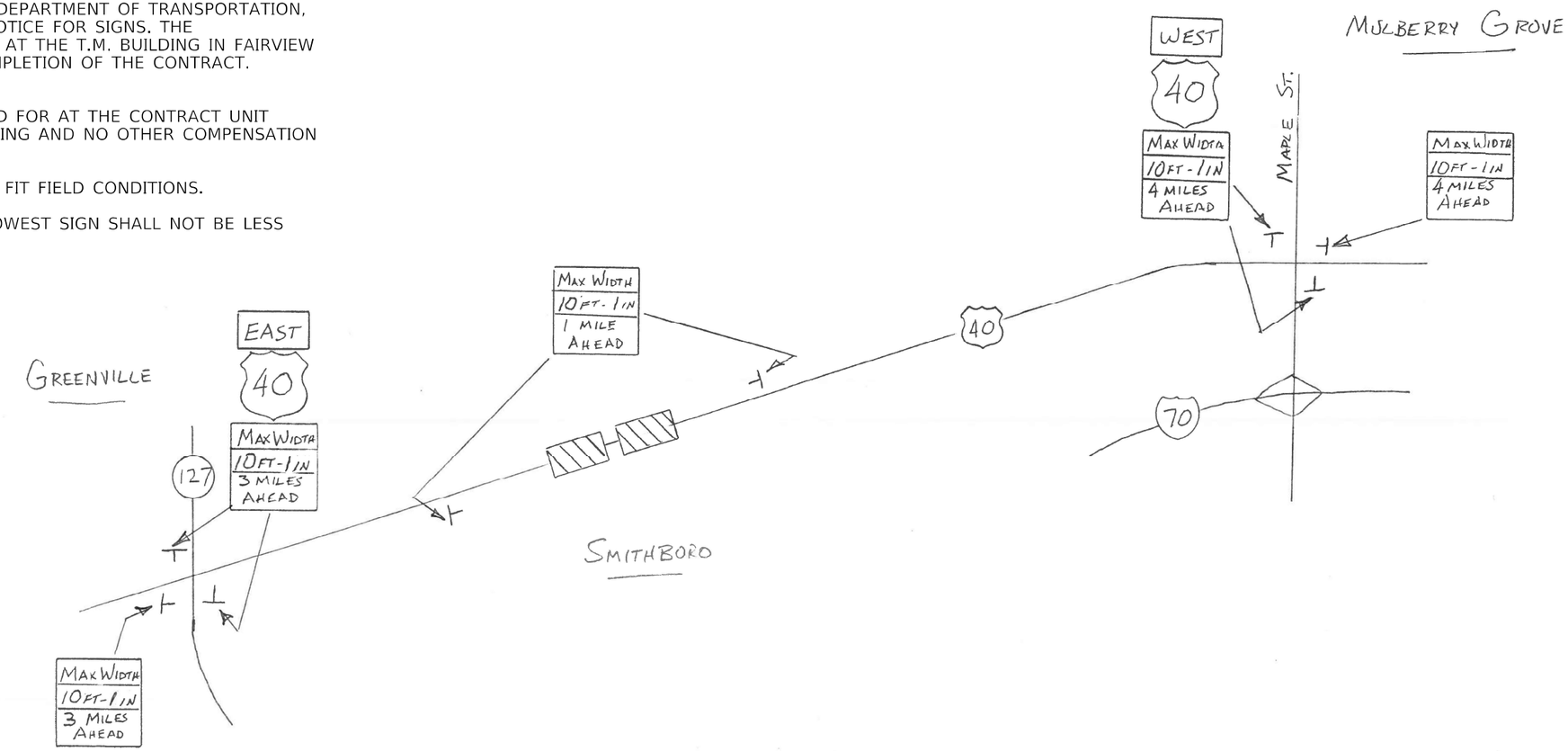


### SIGNS REQUIRED

| | |
|---|---|
| MAX WIDTH 10FT-1IN 1 MILE AHEAD | 2 |
| MAX WIDTH 10FT-1IN 3 MILES AHEAD | 3 |
| MAX WIDTH 10FT-1IN 4 MILES AHEAD | 3 |
| 40 | 4 |
| EAST | 2 |
| WEST | 2 |

## WIDE LOAD SIGNING

US 40 OVER BNSF RR & MAIN ST
SN 003-0018 & SN 003-0019

N

MODEL: Default
FILE NAME: pw:\\idot-pw.bentley.com:PWIDOT\Documents\IDOT Offices\District 8\Projects\D876K46\CADData\CADsheets\D876K46-sht-details.dgn

| | | | |
|---|---|---|---|
| USER NAME = humphreysb | DESIGNED - | REVISED - | STATE OF ILLINOIS DEPARTMENT OF TRANSPORTATION |
| | DRAWN - | REVISED - | |
| PLOT SCALE = 40.0000 ' / in. | CHECKED - | REVISED - | |
| PLOT DATE = 5/13/2022 | DATE - | REVISED - | |

**WIDE LOAD SIGNING DETAILS**

SCALE: NTS | SHEET 1 OF 1 SHEETS | STA. TO STA.

| **F.A. RTE. | SECTION | COUNTY | TOTAL SHEETS | SHEET NO. |
|---|---|---|---|---|
| ** | (Q-1,X-1,F-1)RS-2, Q-1VBDR-1 | BOND | 113 | 113 |
| **FAU 9832, FAS 1751 | | CONTRACT NO. 76K46 | | |
| | ILLINOIS | FED. AID PROJECT | | |