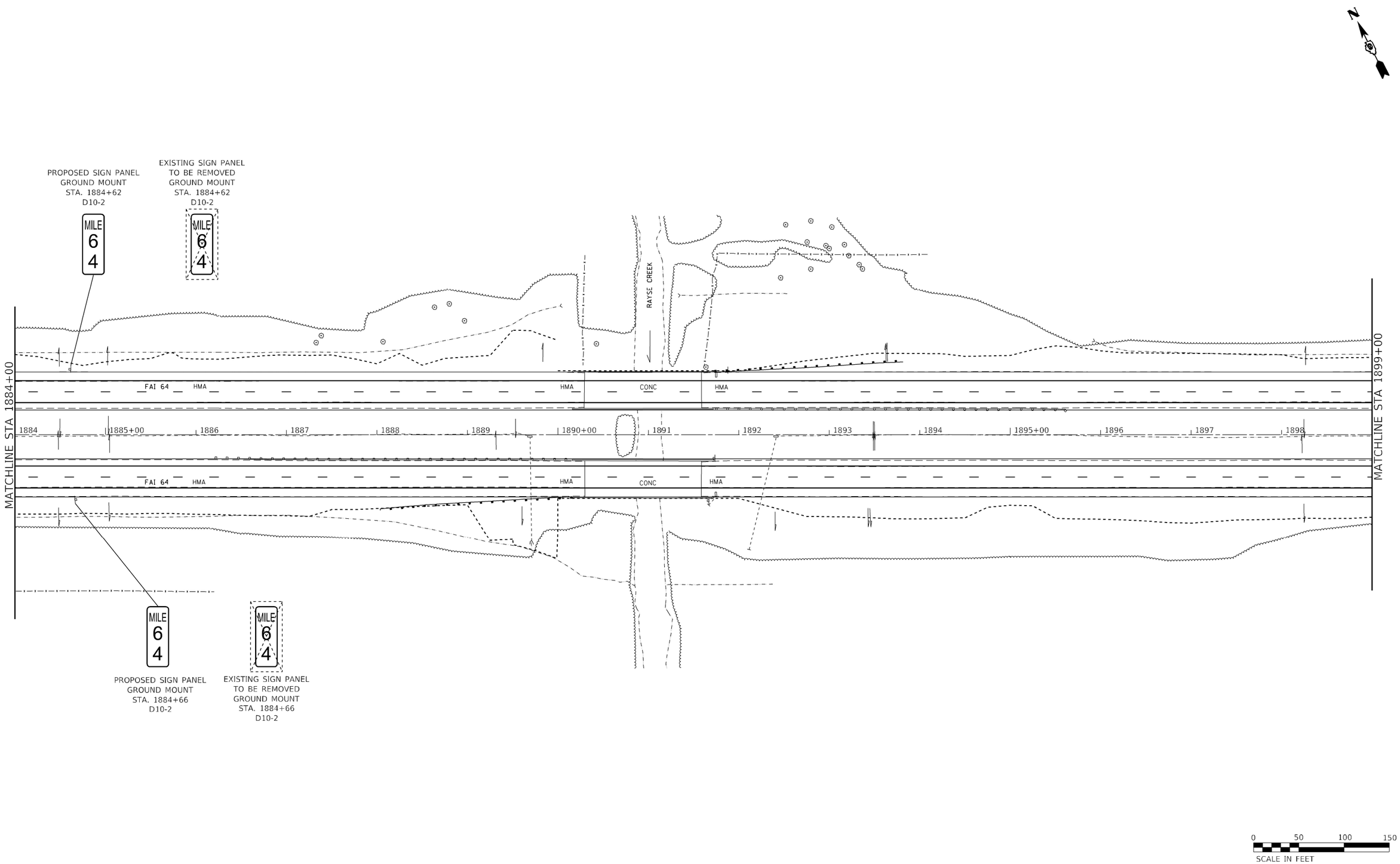

* (41-6,41-6-1,41-7)RS-2;BSMART 2023

MODEL: Default
FILE NAME: ...\D978604-sht-Signing Plan.dgn

Kaskaskia Engineering Group, LLC
PROFESSIONAL SPECIFICATIONS
Illinois Professional Design Firm
Professional Engineering Group
LICENSE NO.
184.004773
20-3880186

USER NAME = rjo	DESIGNED -	REVISED -	
	DRAWN -	REVISED -	
PLOT SCALE = 100.0000 ' / in.	CHECKED -	REVISED -	
PLOT DATE = 10/20/2022 - 4:09:12 PM	DATE -	REVISED -	

STATE OF ILLINOIS
DEPARTMENT OF TRANSPORTATION

INTERSTATE 64
SIGNING PLAN

SCALE:1"=50' | SHEET 8 OF 39 SHEETS | STA. 1884+00 TO STA. 1899+00

F.A.I. RTE.	SECTION	COUNTY	TOTAL SHEETS	SHEET NO.
64	*	JEFFERSON	1052	301
		CONTRACT NO. 78604		
		ILLINOIS	FED. AID PROJECT	

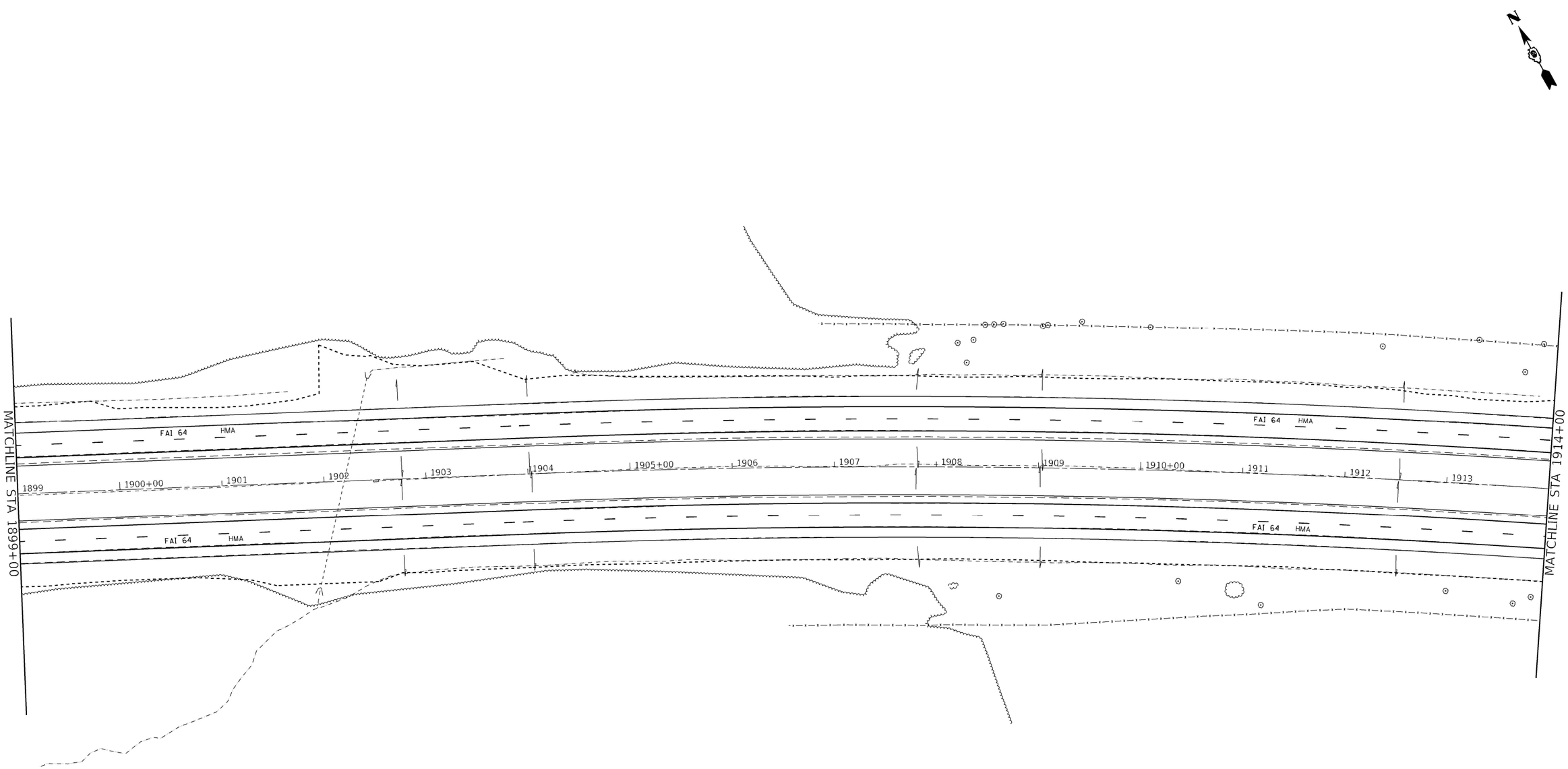

NO PROPOSED WORK SHOWN,
SHEET INCLUDED FOR INFORMATION.

0 50 100 150
SCALE IN FEET

* (41-6,41-6-1,41-7)RS-2;BSMART 2023

MODEL: Default
FILE NAME: ...\D978604-sht-Signing Plan.dgn

Kaskaskia Engineering Group, LLC
PROFESSIONAL REGISTRATIONS
Illinois Professional Design Firm
Professional Engineering Group
LICENSE NO.
184.004775
20-5000185

USER NAME = rjo	DESIGNED -	REVISED -	
	DRAWN -	REVISED -	
PLOT SCALE = 100.0000 ' / in.	CHECKED -	REVISED -	
PLOT DATE = 10/20/2022 - 4:09:13 PM	DATE -	REVISED -	

STATE OF ILLINOIS
DEPARTMENT OF TRANSPORTATION

INTERSTATE 64
SIGNING PLAN

SCALE: 1"=50' | SHEET 9 OF 39 SHEETS | STA. 1899+00 TO STA. 1914+00

F.A.I. RTE.	SECTION	COUNTY	TOTAL SHEETS	SHEET NO.
64	*	JEFFERSON	1052	302
		CONTRACT NO. 78604		
		ILLINOIS	FED. AID PROJECT	

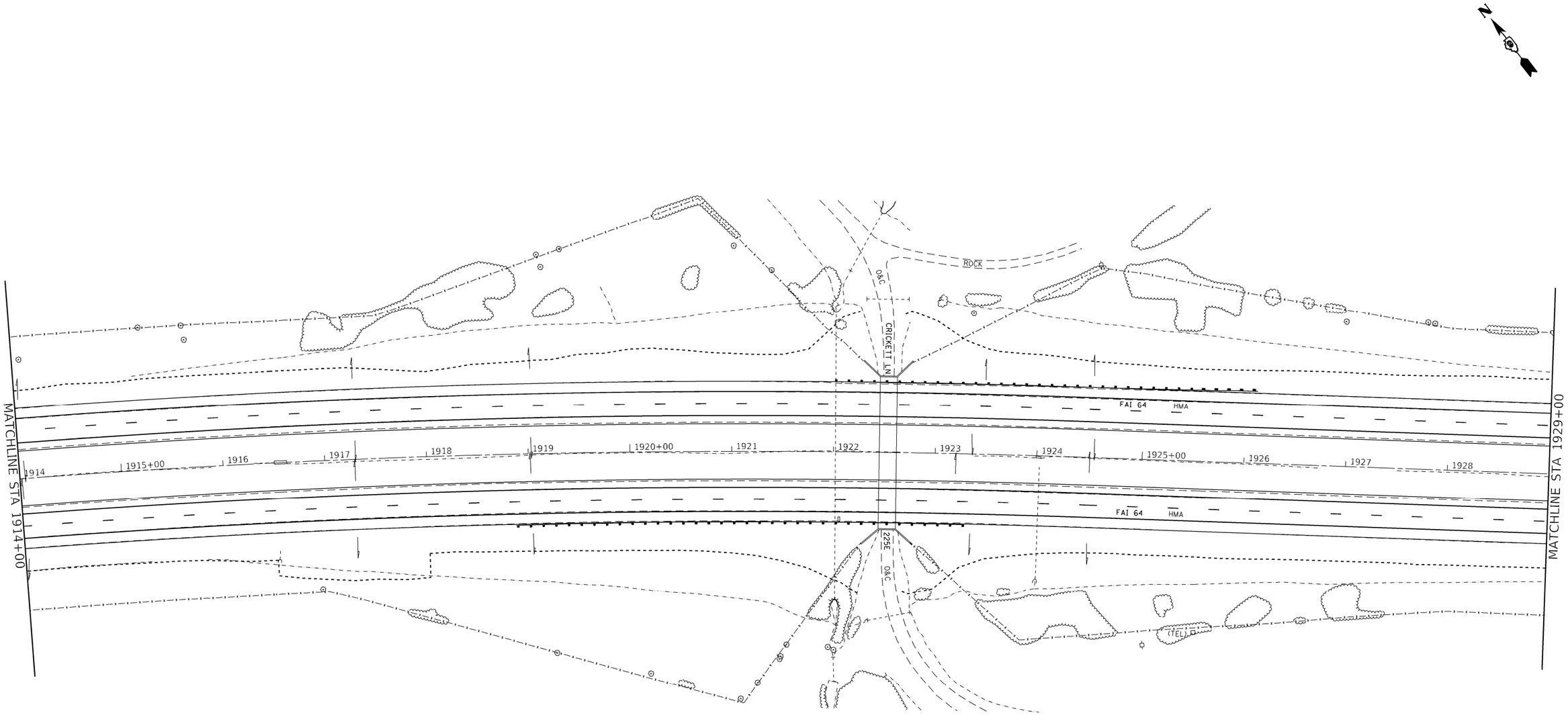

NO PROPOSED WORK SHOWN,
SHEET INCLUDED FOR INFORMATION.

0 50 100 150
SCALE IN FEET

* (41-6,41-6-1,41-7)RS-2;BSMART 2023

MODEL: Default
FILE NAME: ...\D978604-sht-Signing Plan.dgn

Kaskaskia Engineering Group, LLC
PROFESSIONAL REGISTRATIONS
Illinois Professional Design Firm
Professional Engineering Group
LICENSE NO.
184.004773
20-5000165

USER NAME = rjo	DESIGNED -	REVISED -	
	DRAWN -	REVISED -	
PLOT SCALE = 100.0000 ' / in.	CHECKED -	REVISED -	
PLOT DATE = 10/20/2022 - 4:09:14 PM	DATE -	REVISED -	

STATE OF ILLINOIS
DEPARTMENT OF TRANSPORTATION

INTERSTATE 64
SIGNING PLAN

SCALE: 1"=50' | SHEET 10 OF 39 SHEETS | STA. 1914+00 TO STA. 1929+00

F.A.I. RTE.	SECTION	COUNTY	TOTAL SHEETS	SHEET NO.
64	*	JEFFERSON	1052	303
		CONTRACT NO. 78604		
		ILLINOIS	FED. AID PROJECT	

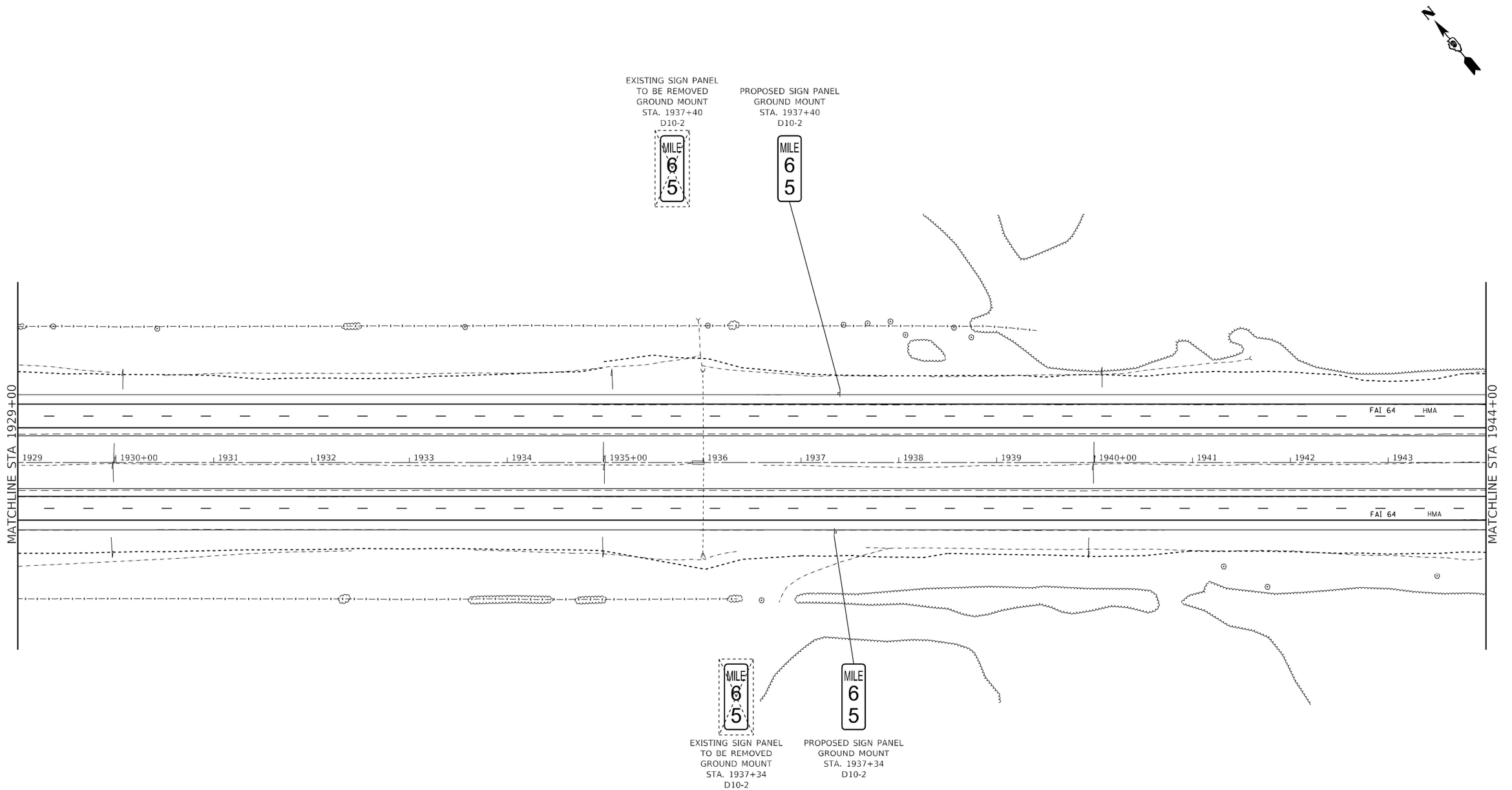

* (41-6,41-6-1,41-7)RS-2;BSMART 2023

MODEL: Default
FILE NAME: ...\D978604-sht-Signing Plan.dgn

Kaskaskia Engineering Group, LLC
200 E. Main St., Suite 100
Belleville, Illinois 62220
618.233.5977 phone
618.233.5977 fax
www.kaskaskiaeng.com
PROFESSIONAL SPECIFICATIONS
Illinois Professional Design Firm
Professional Engineering Group
LICENSE NO.
184.004773
20-5000165

USER NAME = rjo	DESIGNED -	REVISED -	
	DRAWN -	REVISED -	
PLOT SCALE = 100.0000 ' / in.	CHECKED -	REVISED -	
PLOT DATE = 10/20/2022 - 4:09:15 PM	DATE -	REVISED -	

STATE OF ILLINOIS
DEPARTMENT OF TRANSPORTATION

INTERSTATE 64
SIGNING PLAN

SCALE: 1"=50' | SHEET 11 OF 39 SHEETS | STA. 1929+00 TO STA. 1944+00

F.A.I. RTE.	SECTION	COUNTY	TOTAL SHEETS	SHEET NO.
64	*	JEFFERSON	1052	304
		CONTRACT NO. 78604		
		ILLINOIS	FED. AID PROJECT	

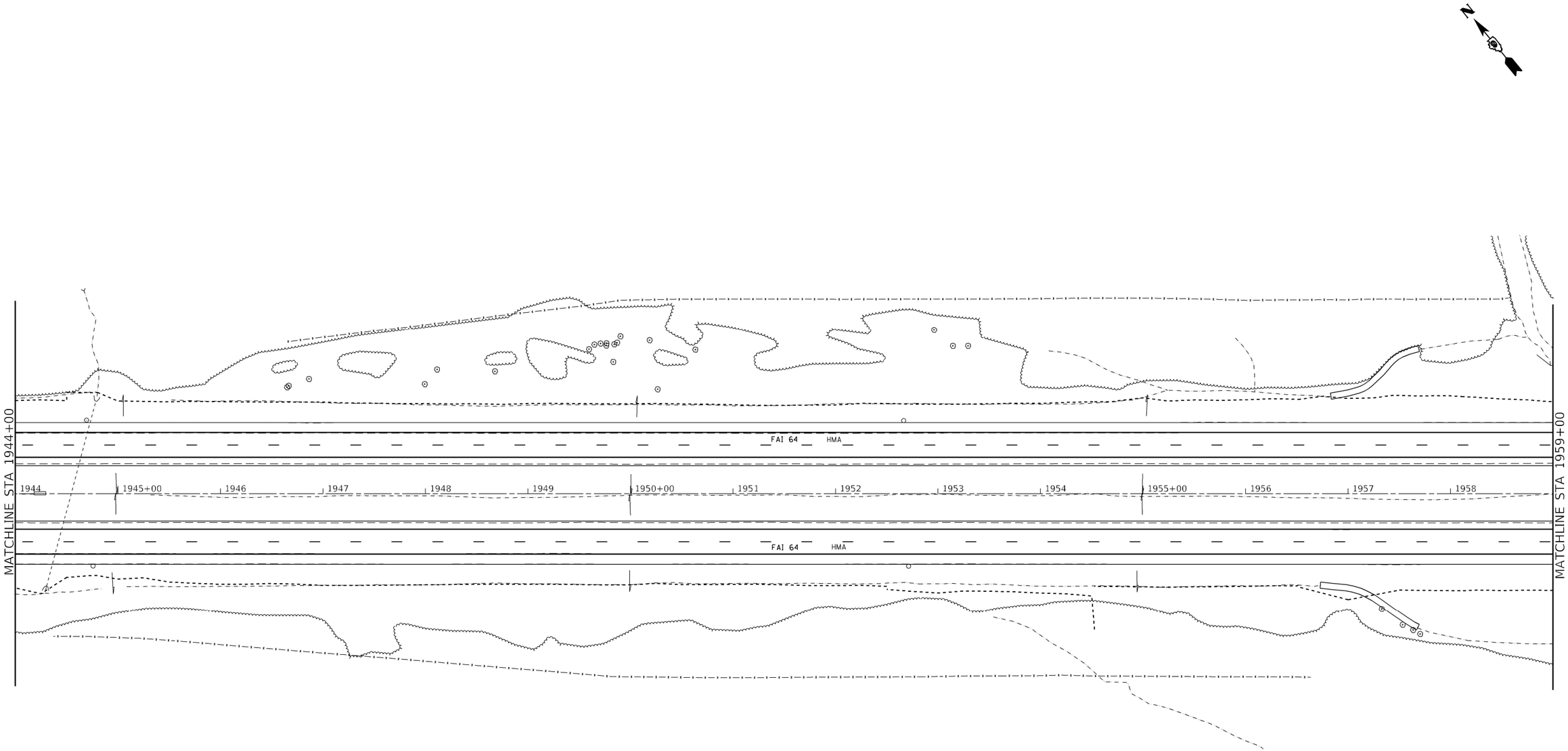

NO PROPOSED WORK SHOWN,
SHEET INCLUDED FOR INFORMATION.

0 50 100 150
SCALE IN FEET

* (41-6,41-6-1,41-7)RS-2;BSMART 2023

MODEL: Default
FILE NAME: ...\D978604-sht-Signing Plan.dgn

Kaskaskia Engineering Group, LLC
200 E. Main St., Suite 100
Belleville, Illinois 62220
618.433.5877 phone
618.433.5977 fax
www.kaskaskiaeng.com
PROFESSIONAL REGISTRATIONS
Illinois Professional Design Firm
Professional Engineering Group
LICENSE NO.
184.004773
20-5000185

USER NAME = rjo	DESIGNED -	REVISED -	
	DRAWN -	REVISED -	
PLOT SCALE = 100.0000 ' / in.	CHECKED -	REVISED -	
PLOT DATE = 10/20/2022 - 4:09:16 PM	DATE -	REVISED -	

STATE OF ILLINOIS
DEPARTMENT OF TRANSPORTATION

INTERSTATE 64
SIGNING PLAN

SCALE: 1"=50' | SHEET 12 OF 39 SHEETS | STA. 1944+00 TO STA. 1959+00

F.A.I. RTE.	SECTION	COUNTY	TOTAL SHEETS	SHEET NO.
64	*	JEFFERSON	1052	305
		CONTRACT NO. 78604		
		ILLINOIS	FED. AID PROJECT	

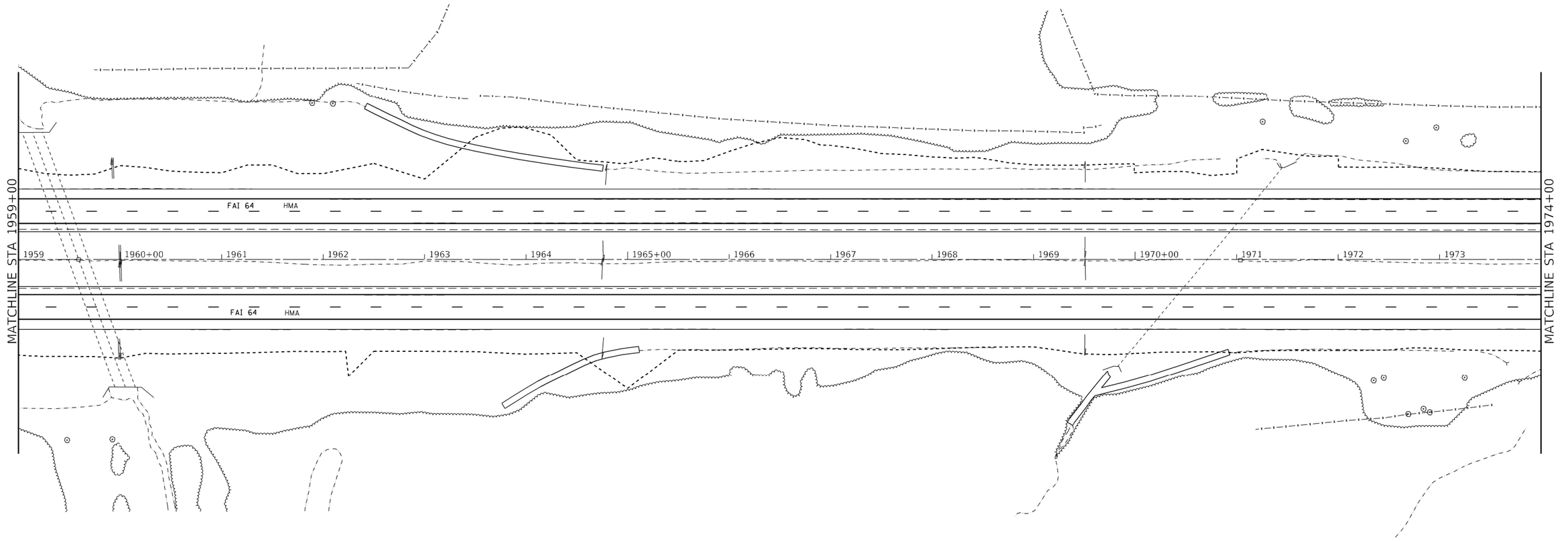

NO PROPOSED WORK SHOWN,
SHEET INCLUDED FOR INFORMATION.

0 50 100 150
SCALE IN FEET

* (41-6,41-6-1,41-7)RS-2;BSMART 2023

MODEL: Default
FILE NAME: ...\D978604-sht-Signing Plan.dgn

Kaskaskia Engineering Group, LLC
PROFESSIONAL REGISTRATIONS
Illinois Professional Design Firm
Professional Engineering Group
LICENSE NO.
184.007172
20-3860565

USER NAME = rjo	DESIGNED -	REVISED -
	DRAWN -	REVISED -
PLOT SCALE = 100.0000 ' / in.	CHECKED -	REVISED -
PLOT DATE = 10/20/2022 - 4:09:16 PM	DATE -	REVISED -

STATE OF ILLINOIS
DEPARTMENT OF TRANSPORTATION

INTERSTATE 64
SIGNING PLAN

SCALE: 1"=50' | SHEET 13 OF 39 SHEETS | STA. 1959+00 | TO STA. 1974+00

F.A.I. RTE.	SECTION	COUNTY	TOTAL SHEETS	SHEET NO.
64	*	JEFFERSON	1052	306
		CONTRACT NO. 78604		
	ILLINOIS FED. AID PROJECT			

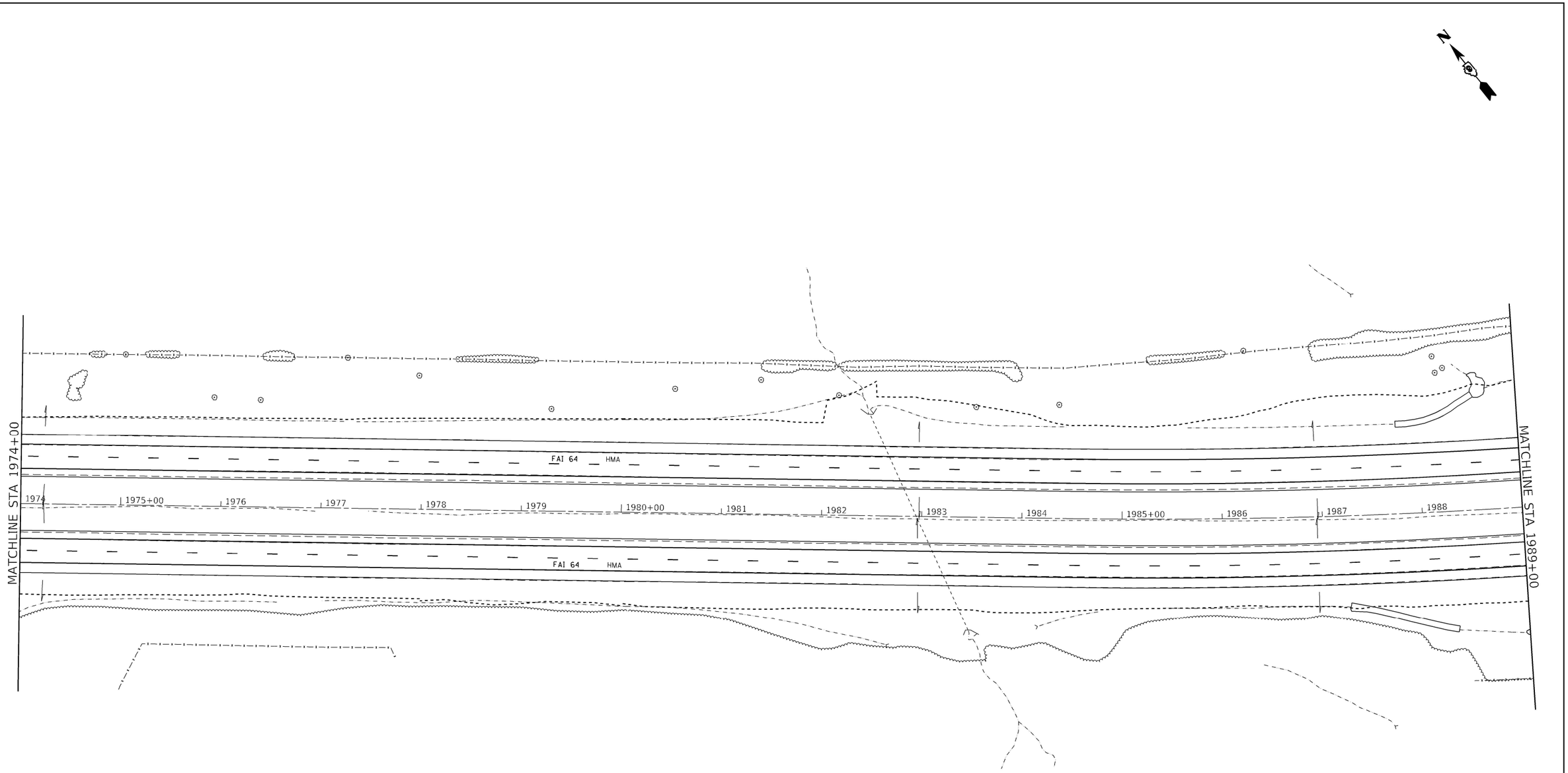

NO PROPOSED WORK SHOWN,
SHEET INCLUDED FOR INFORMATION.

0 50 100 150
SCALE IN FEET

* (41-6,41-6-1,41-7)RS-2;BSMART 2023

MODEL: Default
FILE NAME: ...\D978604-sht-Signing Plan.dgn

Kaskaskia Engineering Group, LLC
PROFESSIONAL SERVICES LICENSE NO.
Illinois Professional Design Firm
Professional Engineering Group
LICENSE NO.
184.004773
20-5000185

USER NAME = rjo	DESIGNED -	REVISED -	
	DRAWN -	REVISED -	
PLOT SCALE = 100.0000 ' / in.	CHECKED -	REVISED -	
PLOT DATE = 10/20/2022 - 4:09:17 PM	DATE -	REVISED -	

STATE OF ILLINOIS
DEPARTMENT OF TRANSPORTATION

INTERSTATE 64
SIGNING PLAN

SCALE: 1"=50' | SHEET 14 OF 39 SHEETS | STA. 1974+00 TO STA. 1989+00

F.A.I. RTE.	SECTION	COUNTY	TOTAL SHEETS	SHEET NO.
64	*	JEFFERSON	1052	307
		CONTRACT NO. 78604		
		ILLINOIS	FED. AID PROJECT	

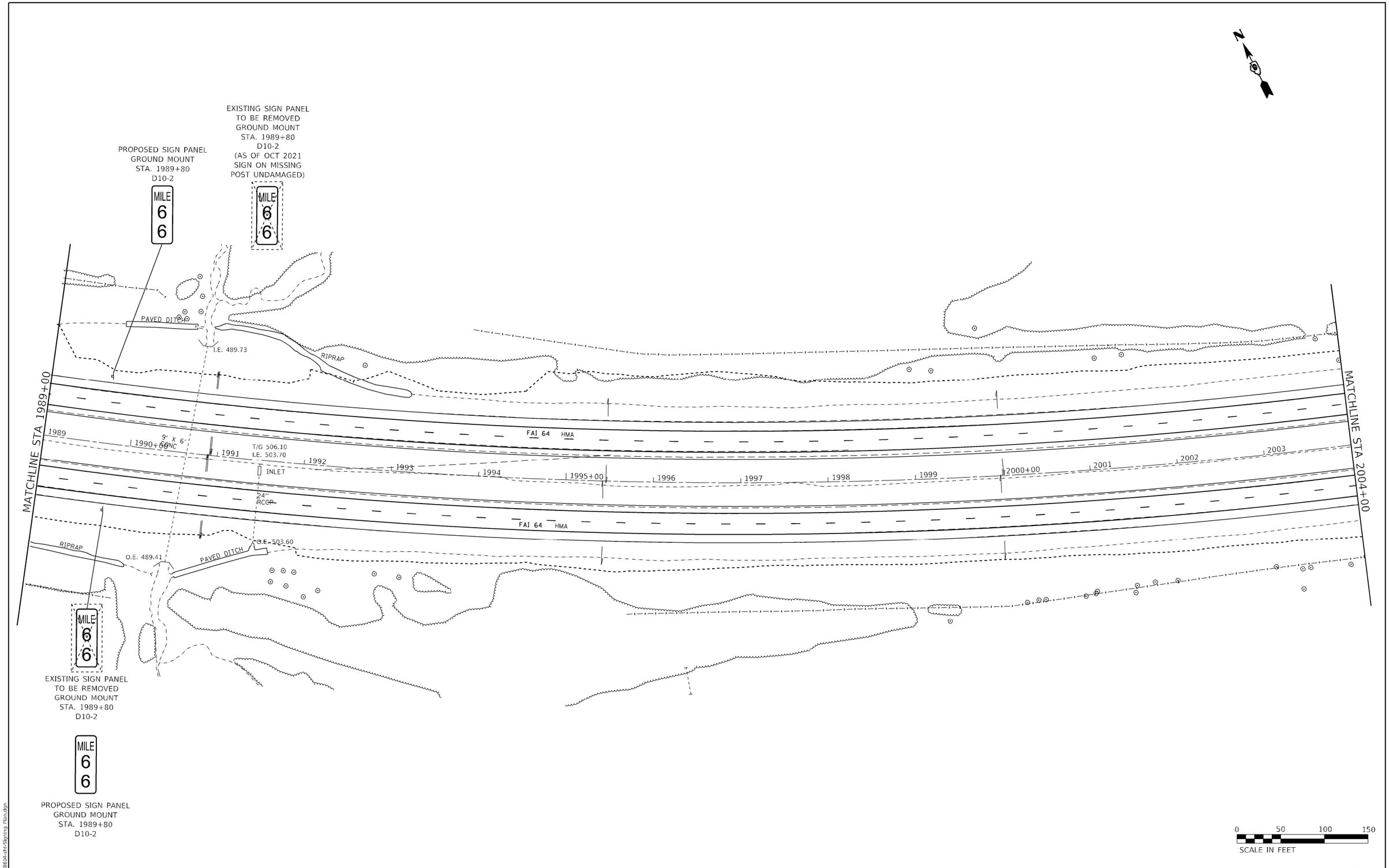

* (41-6,41-6-1,41-7)RS-2;BSMART 2023

MODEL: Default
FILE NAME: ...\D978604-sht-Signing Plan.dgn

Kaskaskia Engineering Group, LLC
PROFESSIONAL REGISTRATIONS
Illinois Professional Design Firm
Professional Engineering Group

USER NAME = rjo	DESIGNED -	REVISED -	
	DRAWN -	REVISED -	
PLOT SCALE = 100.0000 ' / in.	CHECKED -	REVISED -	
PLOT DATE = 10/20/2022 - 4:09:18 PM	DATE -	REVISED -	

STATE OF ILLINOIS
DEPARTMENT OF TRANSPORTATION

INTERSTATE 64
SIGNING PLAN

SCALE: 1"=50' | SHEET 15 OF 39 SHEETS | STA. 1989+00 TO STA. 2004+00

F.A.I. RTE.	SECTION	COUNTY	TOTAL SHEETS	SHEET NO.
64	*	JEFFERSON	1052	308
		CONTRACT NO. 78604		
		ILLINOIS	FED. AID PROJECT	

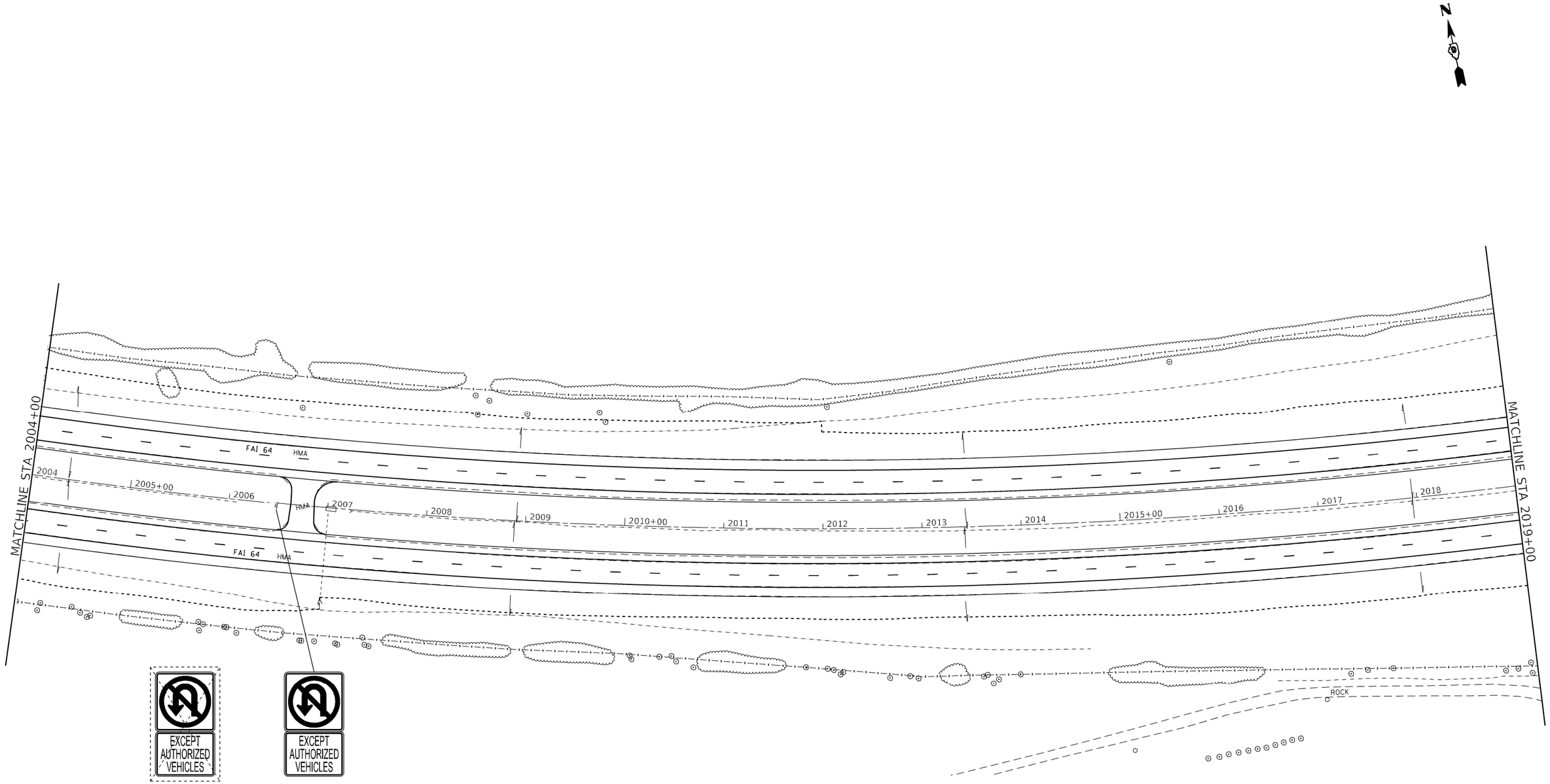

EXISTING SIGN PANEL
TO BE REMOVED
DOUBLE SIDED
GROUND MOUNT
R3-4
R3-I101
STA. 2006+49

PROPOSED SIGN PANEL
DOUBLE SIDED
GROUND MOUNT
R3-4
R3-I101
STA. 2006+49

0 50 100 150
SCALE IN FEET

* (41-6,41-6-1,41-7)RS-2;BSMART 2023

MODEL: Default
FILE NAME: ...\D978604-sht-Signing Plan.dgn

Kaskaskia Engineering Group, LLC
PROFESSIONAL SECRETARY(ES)
Illinois Professional Design Firm
Professional Engineering Group
LICENSE NO.
184.004773
20-5000165

USER NAME = rjo	DESIGNED -	REVISED -	
	DRAWN -	REVISED -	
PLOT SCALE = 100.0000 ' / in.	CHECKED -	REVISED -	
PLOT DATE = 10/20/2022 - 4:09:19 PM	DATE -	REVISED -	

STATE OF ILLINOIS
DEPARTMENT OF TRANSPORTATION

INTERSTATE 64
SIGNING PLAN

SCALE: 1"=50' | SHEET 16 OF 39 SHEETS | STA. 2004+00 TO STA. 2019+00

F.A.I. RTE.	SECTION	COUNTY	TOTAL SHEETS	SHEET NO.
64	*	JEFFERSON	1052	309
		CONTRACT NO. 78604		
		ILLINOIS	FED. AID PROJECT	

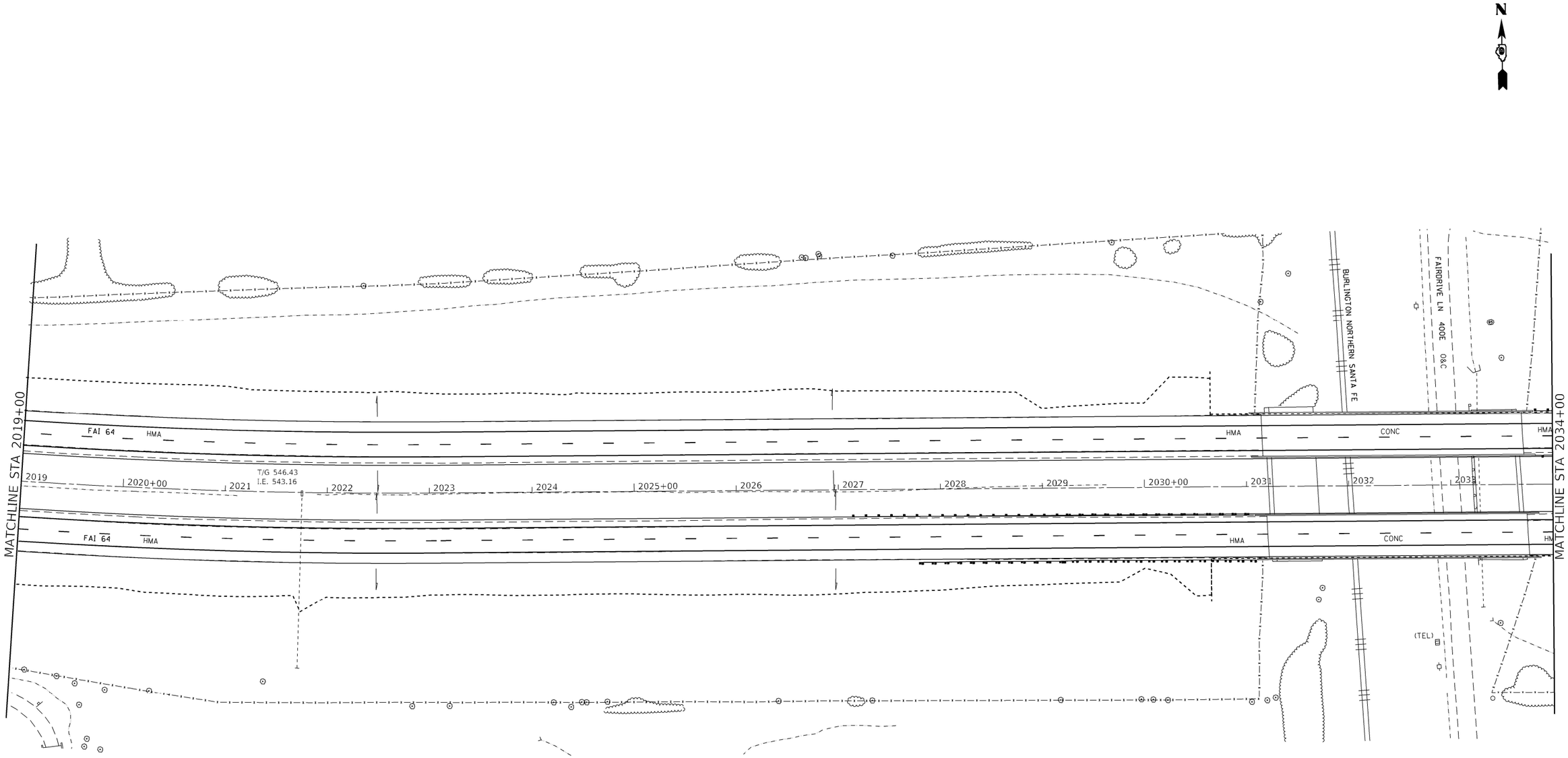

NO PROPOSED WORK SHOWN,
SHEET INCLUDED FOR INFORMATION.

0 50 100 150
SCALE IN FEET

* (41-6,41-6-1,41-7)RS-2;BSMART 2023

MODEL: Default
FILE NAME: ...\D978604-sht-Signing Plan.dgn

Kaskaskia Engineering Group, LLC
200 E. Main St., Suite 100
Belleville, Illinois 62220
618.433.5977 phone
618.433.5977 fax
www.kaskaskiaeng.com
PROFESSIONAL REGISTRATIONS
Illinois Professional Design Firm
Professional Engineering Group
LICENSE NO.
184.004773
20-5000165

USER NAME = rjo	DESIGNED -	REVISED -	
	DRAWN -	REVISED -	
PLOT SCALE = 100.0000 ' / in.	CHECKED -	REVISED -	
PLOT DATE = 10/20/2022 - 4:09:20 PM	DATE -	REVISED -	

STATE OF ILLINOIS
DEPARTMENT OF TRANSPORTATION

INTERSTATE 64
SIGNING PLAN

SCALE: 1"=50' | SHEET 17 OF 39 SHEETS | STA. 2019+00 TO STA. 2034+00

F.A.I. RTE.	SECTION	COUNTY	TOTAL SHEETS	SHEET NO.
64	*	JEFFERSON	1052	310
		CONTRACT NO. 78604		
		ILLINOIS	FED. AID PROJECT	

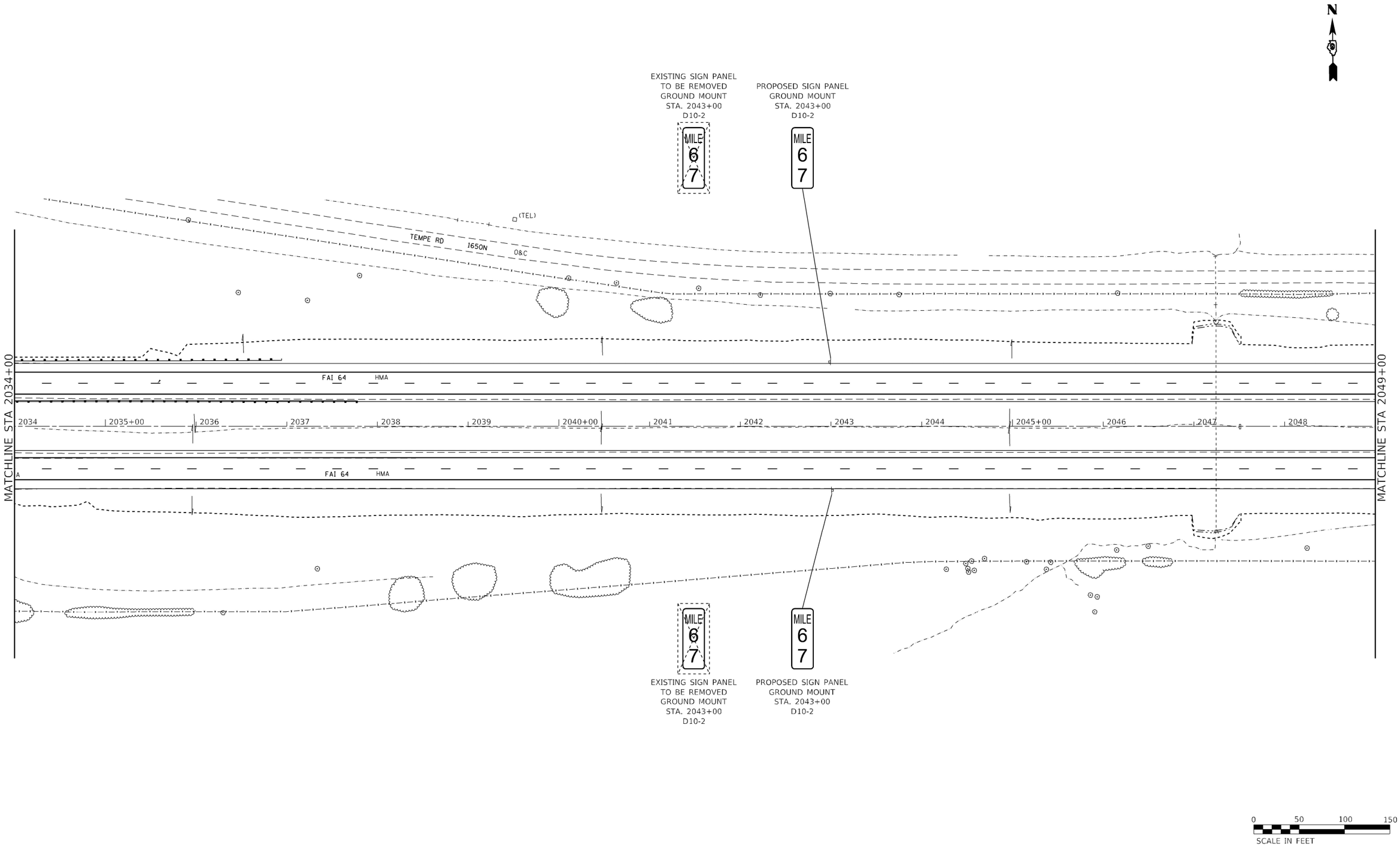

* (41-6,41-6-1,41-7)RS-2;BSMART 2023

MODEL: Default
FILE NAME: ...\D978604-sht-Signing Plan.dgn

Kaskaskia Engineering Group, LLC
PROFESSIONAL REGISTRATIONS
Illinois Professional Design Firm
Professional Engineering Group
LICENSE NO.
184.004773
20-5000185

USER NAME = rjo	DESIGNED -	REVISED -	
	DRAWN -	REVISED -	
PLOT SCALE = 100.0000 ' / in.	CHECKED -	REVISED -	
PLOT DATE = 10/20/2022 - 4:09:21 PM	DATE -	REVISED -	

STATE OF ILLINOIS
DEPARTMENT OF TRANSPORTATION

INTERSTATE 64
SIGNING PLAN

SCALE: 1"=50' | SHEET 18 OF 39 SHEETS | STA. 2034+00 TO STA. 2049+00

F.A.I. RTE.	SECTION	COUNTY	TOTAL SHEETS	SHEET NO.
64	*	JEFFERSON	1052	311
		CONTRACT NO. 78604		
		ILLINOIS	FED. AID PROJECT	

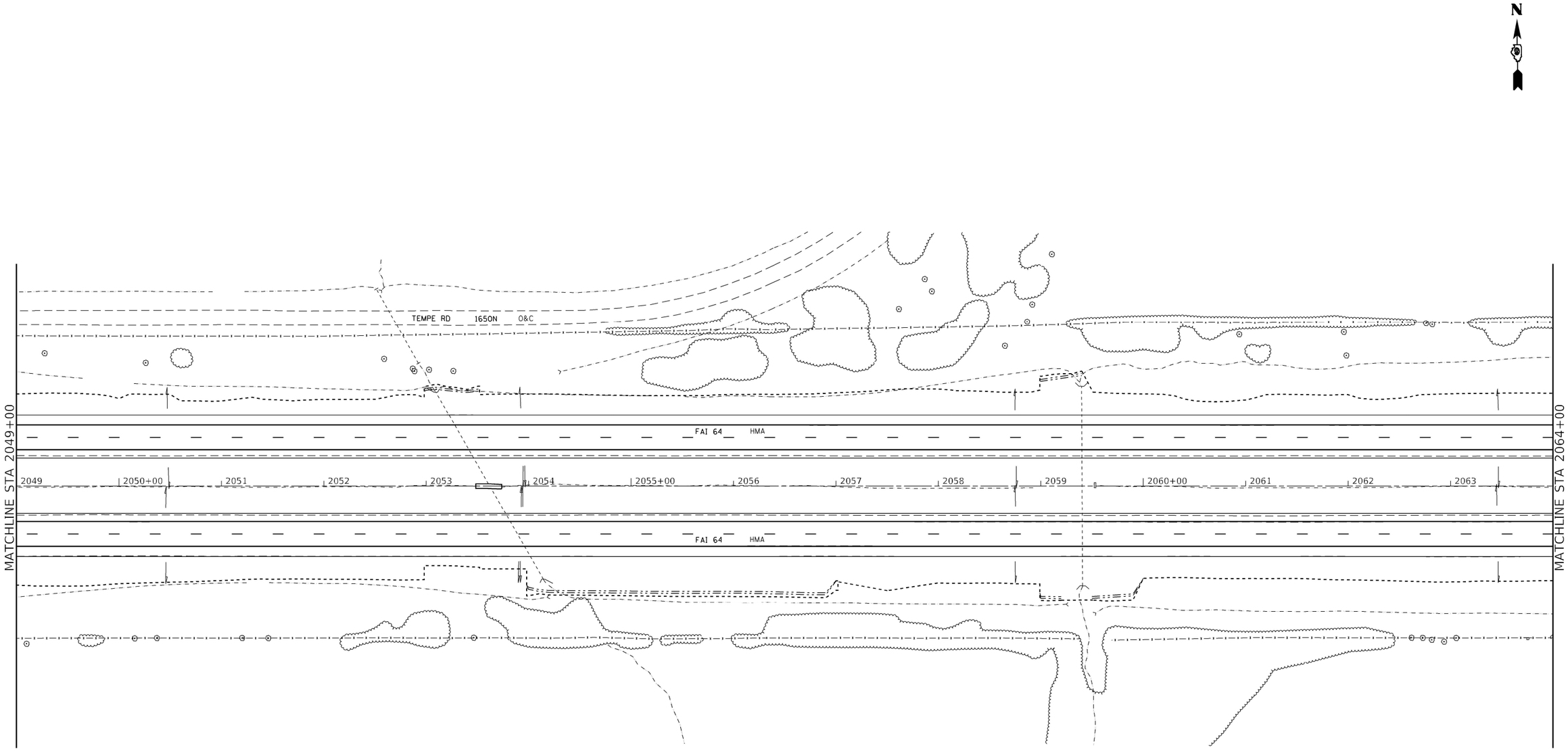

NO PROPOSED WORK SHOWN,
SHEET INCLUDED FOR INFORMATION.

0 50 100 150
SCALE IN FEET

* (41-6,41-6-1,41-7)RS-2;BSMART 2023

MODEL: Default
FILE NAME: ...\D978604-sht-Signing Plan.dgn

Kaskaskia Engineering Group, LLC
PROFESSIONAL REGISTRATIONS
Illinois Professional Design Firm
Professional Engineering Group
LICENSE NO.
184.004773
20-5000185

USER NAME = rjo	DESIGNED -	REVISED -	
	DRAWN -	REVISED -	
PLOT SCALE = 100.0000 ' / in.	CHECKED -	REVISED -	
PLOT DATE = 10/20/2022 - 4:09:22 PM	DATE -	REVISED -	

STATE OF ILLINOIS
DEPARTMENT OF TRANSPORTATION

INTERSTATE 64
SIGNING PLAN

SCALE: 1"=50' | SHEET 19 OF 39 SHEETS | STA. 2049+00 TO STA. 2064+00

F.A.I. RTE.	SECTION	COUNTY	TOTAL SHEETS	SHEET NO.
64	*	JEFFERSON	1052	312
		CONTRACT NO. 78604		
		ILLINOIS FED. AID PROJECT		

N

MATCHLINE STA 2064+00

MATCHLINE STA 2079+00

2064 | 2065+00 | 2066 | 2067 | 2068 | 2069 | 2070+00 | 2071 | 2072 | 2073 | 2074 | 2075+00 | 2076 | 2077 | 2078

FAI 64 HMA

FAI 64 HMA

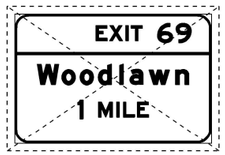

EXISTING SIGN PANEL
TO BE REMOVED
GROUND MOUNT
STA. 2070+47

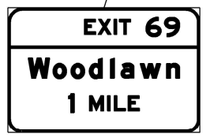

PROPOSED SIGN PANEL
GROUND MOUNT
STA. 2070+47
INTERCHANGE ADVANCE GUIDE SIGN
POST SIZE= W10x22
POST 1= 23'-5"
POST 2= 20'-10"

0 50 100 150
SCALE IN FEET

* (41-6,41-6-1,41-7)RS-2;BSMART 2023

MODEL: Default
FILE NAME: ...\D0978604-sht-Signing Plan.dgn

Kaskaskia Engineering Group, LLC
PROFESSIONAL REGISTRATIONS — LICENSE NO.
Illinois Professional Design Firm: 184.006773
Professional Engineering Group: 20-5880545
200 E. Main St., Suite 100, Salem, Illinois 62881
1807 Edwards Drive, Mount Vernon, Illinois 62864
618.435.5077 fax
www.KaskaskiaEng.com

USER NAME = rjo	DESIGNED -	REVISED -
	DRAWN -	REVISED -
PLOT SCALE = 100.0000 ' / in.	CHECKED -	REVISED -
PLOT DATE = 10/20/2022 - 4:09:23 PM	DATE -	REVISED -

STATE OF ILLINOIS
DEPARTMENT OF TRANSPORTATION

INTERSTATE 64
SIGNING PLAN

SCALE: 1"=50' | SHEET 20 OF 39 SHEETS | STA. 2064+00 | TO STA. 2079+00

F.A.I. RTE.	SECTION	COUNTY	TOTAL SHEETS	SHEET NO.
64	*	JEFFERSON	1052	313
		CONTRACT NO. 78604		
	ILLINOIS	FED. AID PROJECT		

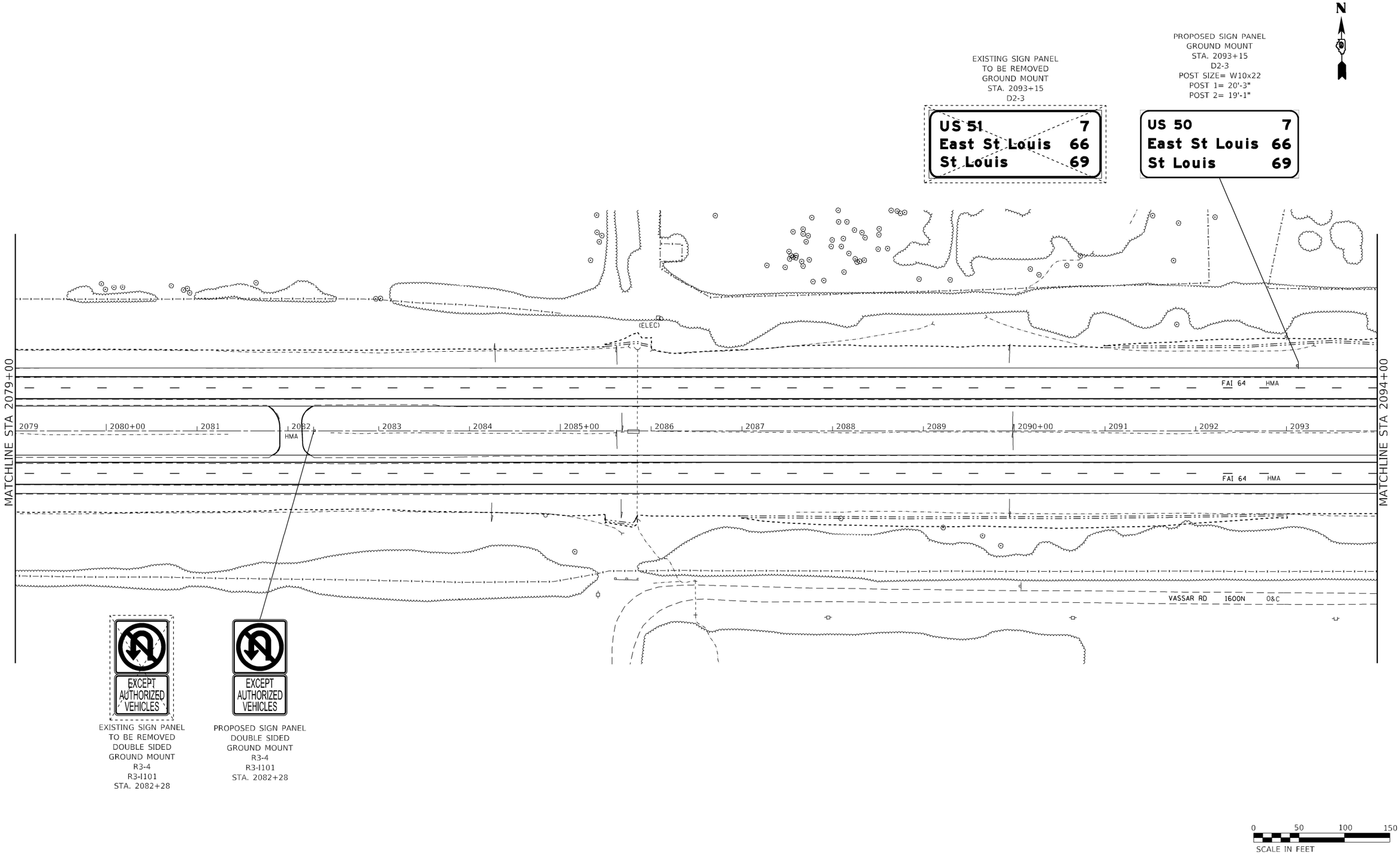

* (41-6,41-6-1,41-7)RS-2;BSMART 2023

MODEL: Default
FILE NAME: ...\D978604-sht-Signing Plan.dgn

Kaskaskia Engineering Group, LLC
PROFESSIONAL REGISTRATIONS
Illinois Professional Design Firm
Professional Engineering Group
LICENSE NO.
184.004773
20-5080165

USER NAME = rjo	DESIGNED -	REVISED -	
	DRAWN -	REVISED -	
PLOT SCALE = 100.0000 ' / in.	CHECKED -	REVISED -	
PLOT DATE = 10/20/2022 - 4:09:24 PM	DATE -	REVISED -	

STATE OF ILLINOIS
DEPARTMENT OF TRANSPORTATION

INTERSTATE 64
SIGNING PLAN

SCALE: 1"=50' | SHEET 21 OF 39 SHEETS | STA. 2079+00 TO STA. 2094+00

F.A.I. RTE.	SECTION	COUNTY	TOTAL SHEETS	SHEET NO.
64	*	JEFFERSON	1052	314
		CONTRACT NO. 78604		
		ILLINOIS FED. AID PROJECT		

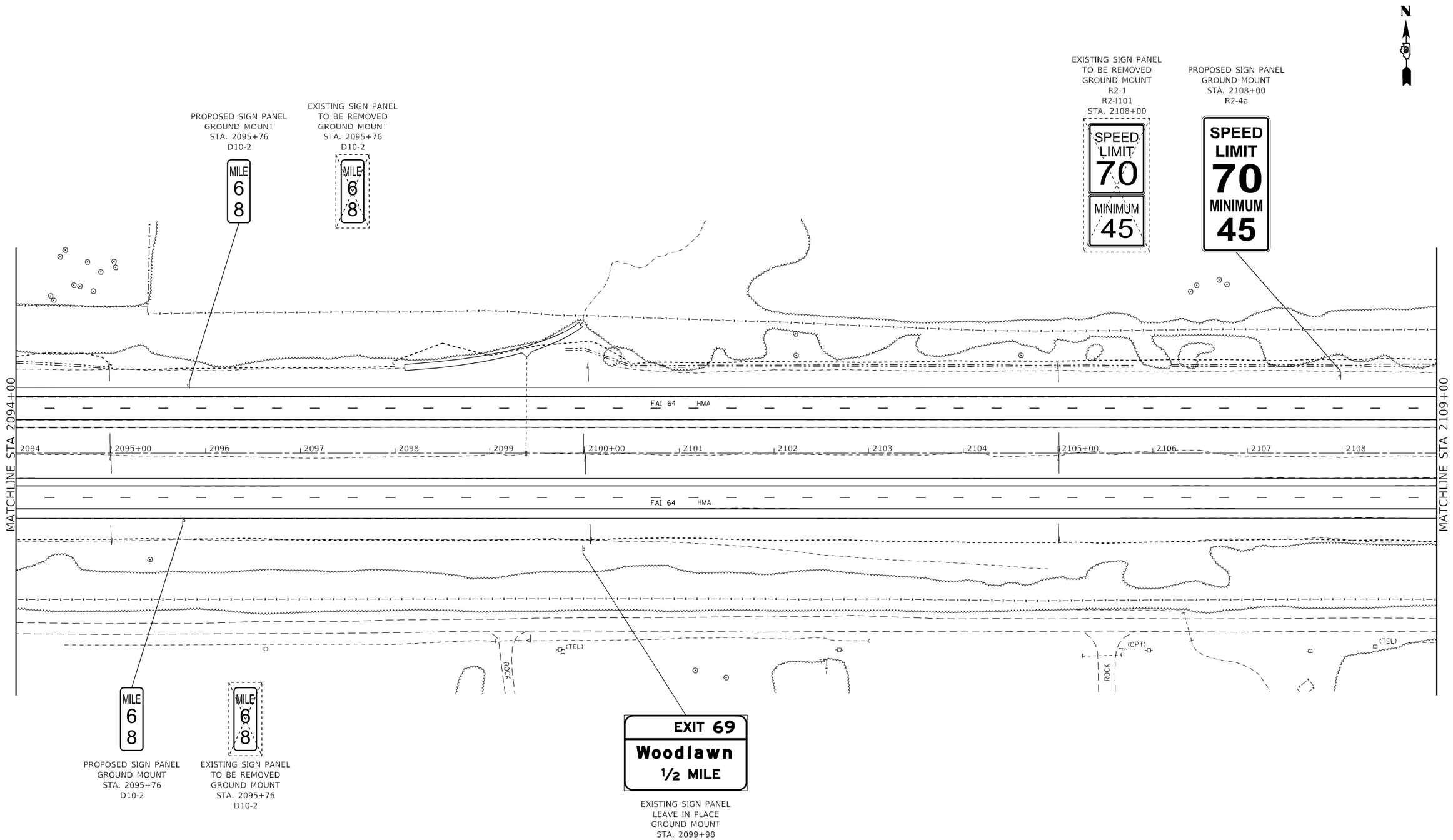

* (41-6,41-6-1,41-7)RS-2;BSMART 2023

MODEL: Default
FILE NAME: ...\D978604-sht-Signing Plan.dgn

Kaskaskia Engineering Group, LLC
PROFESSIONAL REGISTRATIONS
Illinois Professional Design Firm
Professional Engineering Group
LICENSE NO.
184.004773
20-5000165

USER NAME = rjo	DESIGNED -	REVISED -	
	DRAWN -	REVISED -	
PLOT SCALE = 100.0000 ' / in.	CHECKED -	REVISED -	
PLOT DATE = 10/20/2022 - 4:09:25 PM	DATE -	REVISED -	

STATE OF ILLINOIS
DEPARTMENT OF TRANSPORTATION

INTERSTATE 64
SIGNING PLAN

SCALE: 1"=50' | SHEET 22 OF 39 SHEETS | STA. 2094+00 TO STA. 2109+00

F.A.I. RTE.	SECTION	COUNTY	TOTAL SHEETS	SHEET NO.
64	*	JEFFERSON	1052	315
		CONTRACT NO. 78604		
		ILLINOIS	FED. AID PROJECT	

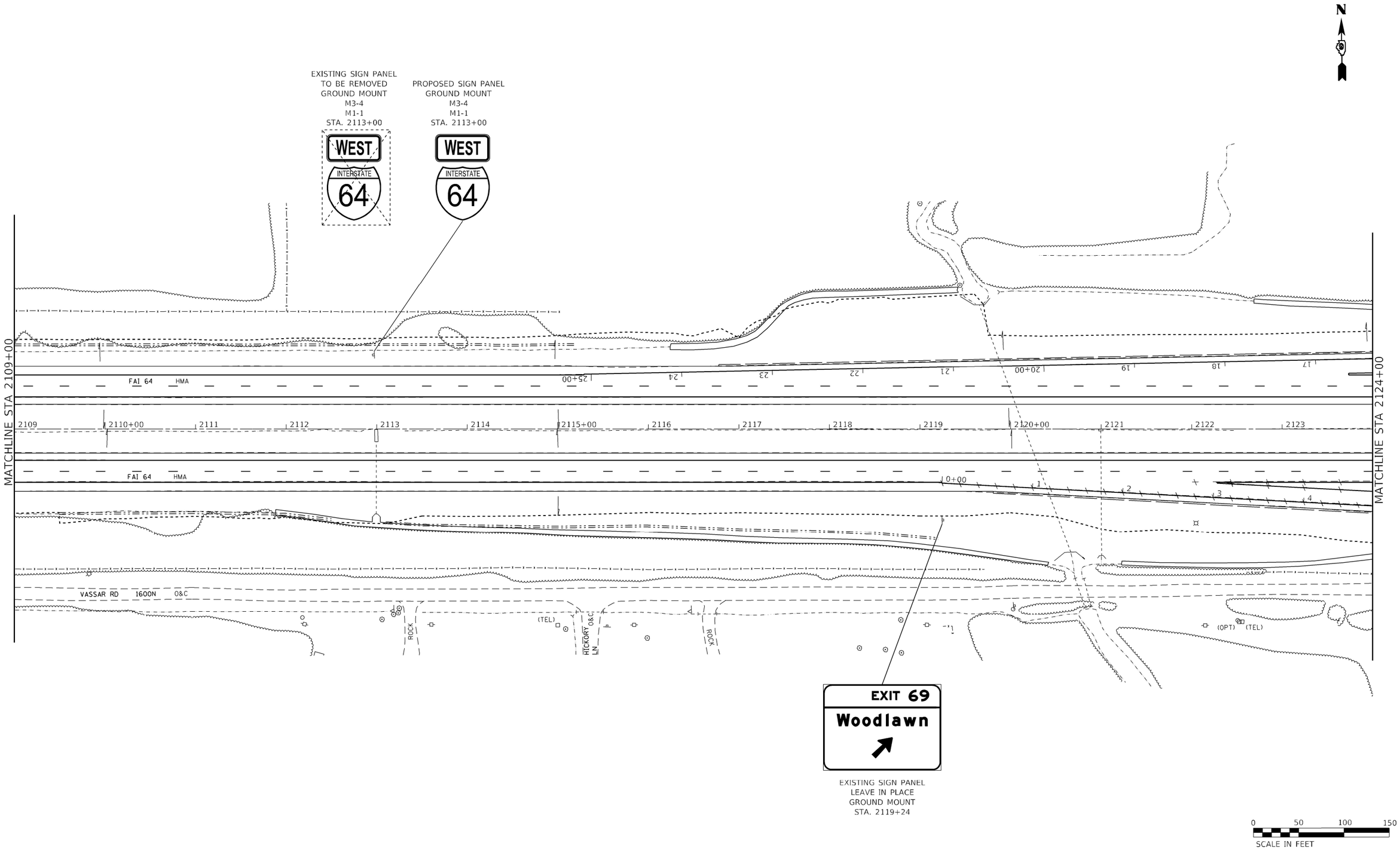

* (41-6,41-6-1,41-7)RS-2;BSMART 2023

MODEL: Default
FILE NAME: ...\D978604-sht-Signing Plan.dgn

Kaskaskia Engineering Group, LLC
PROFESSIONAL REGISTRATIONS
Illinois Professional Design Firm
Professional Engineering Group
LICENSE NO.
184.004773
20-5880165

USER NAME = rjo	DESIGNED -	REVISED -	
	DRAWN -	REVISED -	
PLOT SCALE = 100.0000 ' / in.	CHECKED -	REVISED -	
PLOT DATE = 10/20/2022 - 4:09:26 PM	DATE -	REVISED -	

STATE OF ILLINOIS
DEPARTMENT OF TRANSPORTATION

INTERSTATE 64
SIGNING PLAN

SCALE: 1"=50' | SHEET 23 OF 39 SHEETS | STA. 2109+00 TO STA. 2124+00

F.A.I. RTE.	SECTION	COUNTY	TOTAL SHEETS	SHEET NO.
64	*	JEFFERSON	1052	316
		CONTRACT NO. 78604		
		ILLINOIS	FED. AID PROJECT	

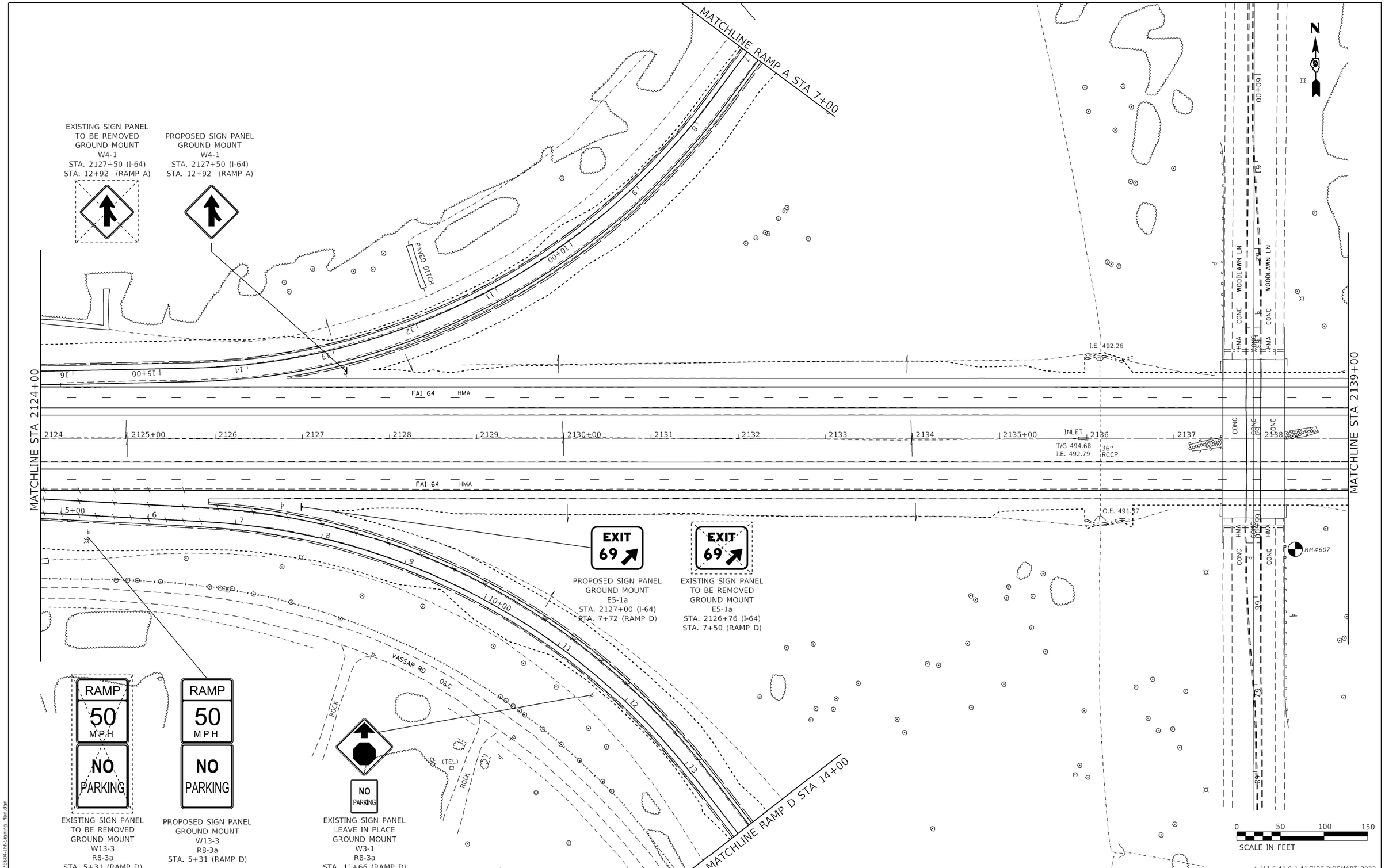

* (41-6,41-6-1,41-7)RS-2;BSMART 2023

MODEL: Default
FILE NAME: ...\D978604-sht-Signing Plan.dgn

Kaskaskia Engineering Group, LLC
PROFESSIONAL REGISTRATIONS
Illinois Professional Design Firm
Professional Engineering Group

USER NAME = rjo	DESIGNED -	REVISED -	
	DRAWN -	REVISED -	
PLOT SCALE = 100.0000 ' / in.	CHECKED -	REVISED -	
PLOT DATE = 10/20/2022 - 4:09:27 PM	DATE -	REVISED -	

STATE OF ILLINOIS
DEPARTMENT OF TRANSPORTATION

INTERSTATE 64
SIGNING PLAN

SCALE: 1"=50' | SHEET 24 OF 39 SHEETS | STA. 2124+00 TO STA. 2139+00

F.A.I. RTE.	SECTION	COUNTY	TOTAL SHEETS	SHEET NO.
64	*	JEFFERSON	1052	317
		CONTRACT NO. 78604		
		ILLINOIS	FED. AID PROJECT	

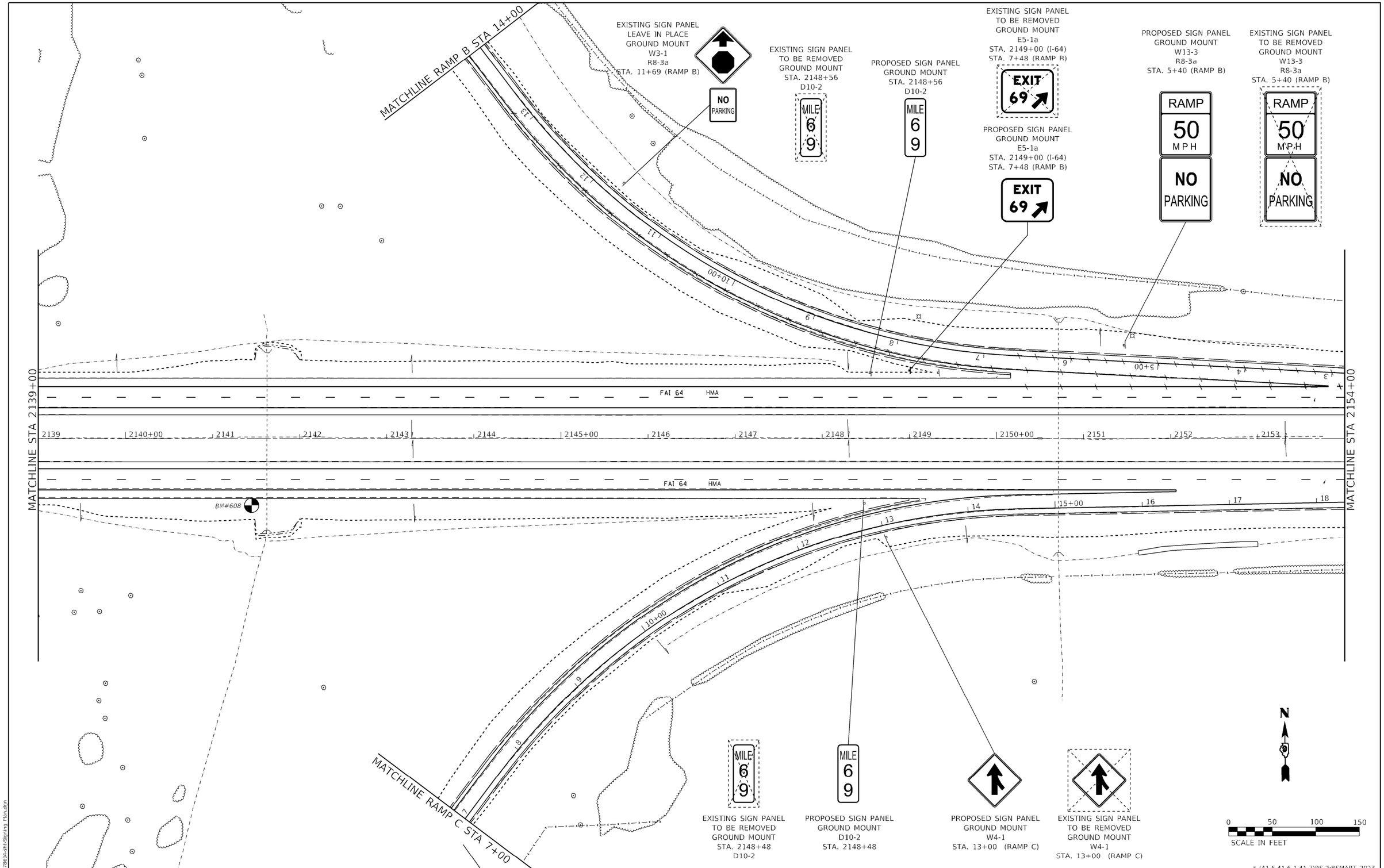

* (41-6,41-6-1,41-7)RS-2;BSMART 2023

MODEL: Default
FILE NAME: ...\D978604-sht-Signing Plan.dgn

Kaskaskia Engineering Group, LLC
200 E. Main St., Suite 100
Belleville, Illinois 62220
618.233.5877 phone
618.233.5877 fax
www.kaskaskiaeng.com
PROFESSIONAL REGISTRATIONS
Illinois Professional Design Firm
Professional Engineering Group
LICENSE NO.
184.004773
20-5000165

USER NAME = rjo	DESIGNED -	REVISED -	
	DRAWN -	REVISED -	
PLOT SCALE = 100.0000 ' / in.	CHECKED -	REVISED -	
PLOT DATE = 10/20/2022 - 4:09:28 PM	DATE -	REVISED -	

STATE OF ILLINOIS
DEPARTMENT OF TRANSPORTATION

INTERSTATE 64
SIGNING PLAN

SCALE: 1"=50' | SHEET 25 OF 39 SHEETS | STA. 2139+00 TO STA. 2154+00

F.A.I. RTE.	SECTION	COUNTY	TOTAL SHEETS	SHEET NO.
64	*	JEFFERSON	1052	318
		CONTRACT NO. 78604		
		ILLINOIS	FED. AID PROJECT	

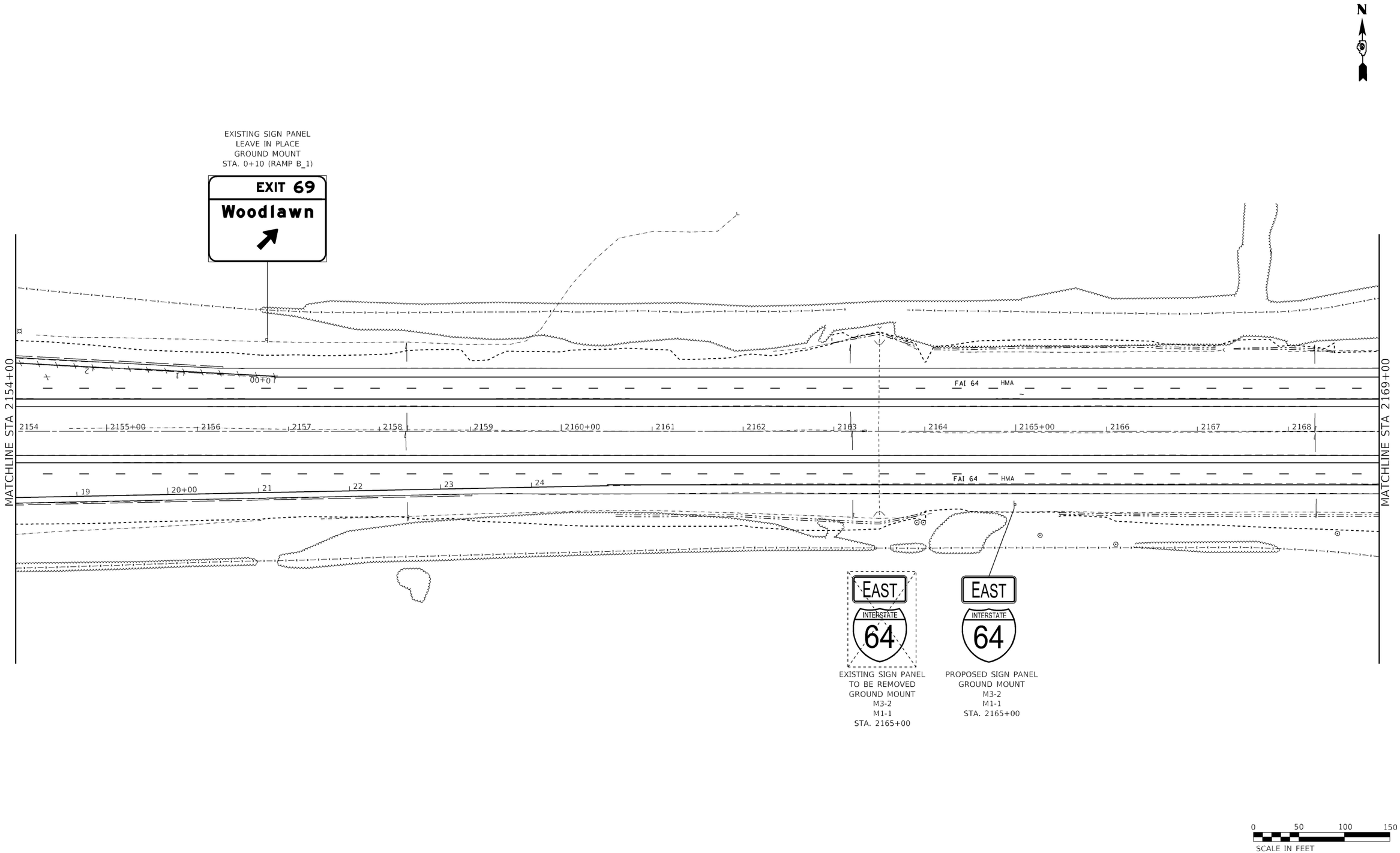

* (41-6,41-6-1,41-7)RS-2;BSMART 2023

MODEL: Default
FILE NAME: ...\D978604-sht-Signing Plan.dgn

Kaskaskia Engineering Group, LLC
PROFESSIONAL REGISTRATIONS
Illinois Professional Design Firm
Professional Engineering Group
LICENSE NO.
184.004775
20-5000165

USER NAME = rjo	DESIGNED -	REVISED -	
	DRAWN -	REVISED -	
PLOT SCALE = 100.0000 ' / in.	CHECKED -	REVISED -	
PLOT DATE = 10/20/2022 - 4:09:29 PM	DATE -	REVISED -	

STATE OF ILLINOIS
DEPARTMENT OF TRANSPORTATION

INTERSTATE 64
SIGNING PLAN

SCALE: 1"=50' | SHEET 26 OF 39 SHEETS | STA. 2154+00 TO STA. 2169+00

F.A.I. RTE.	SECTION	COUNTY	TOTAL SHEETS	SHEET NO.
64	*	JEFFERSON	1052	319
		CONTRACT NO. 78604		
		ILLINOIS	FED. AID PROJECT	

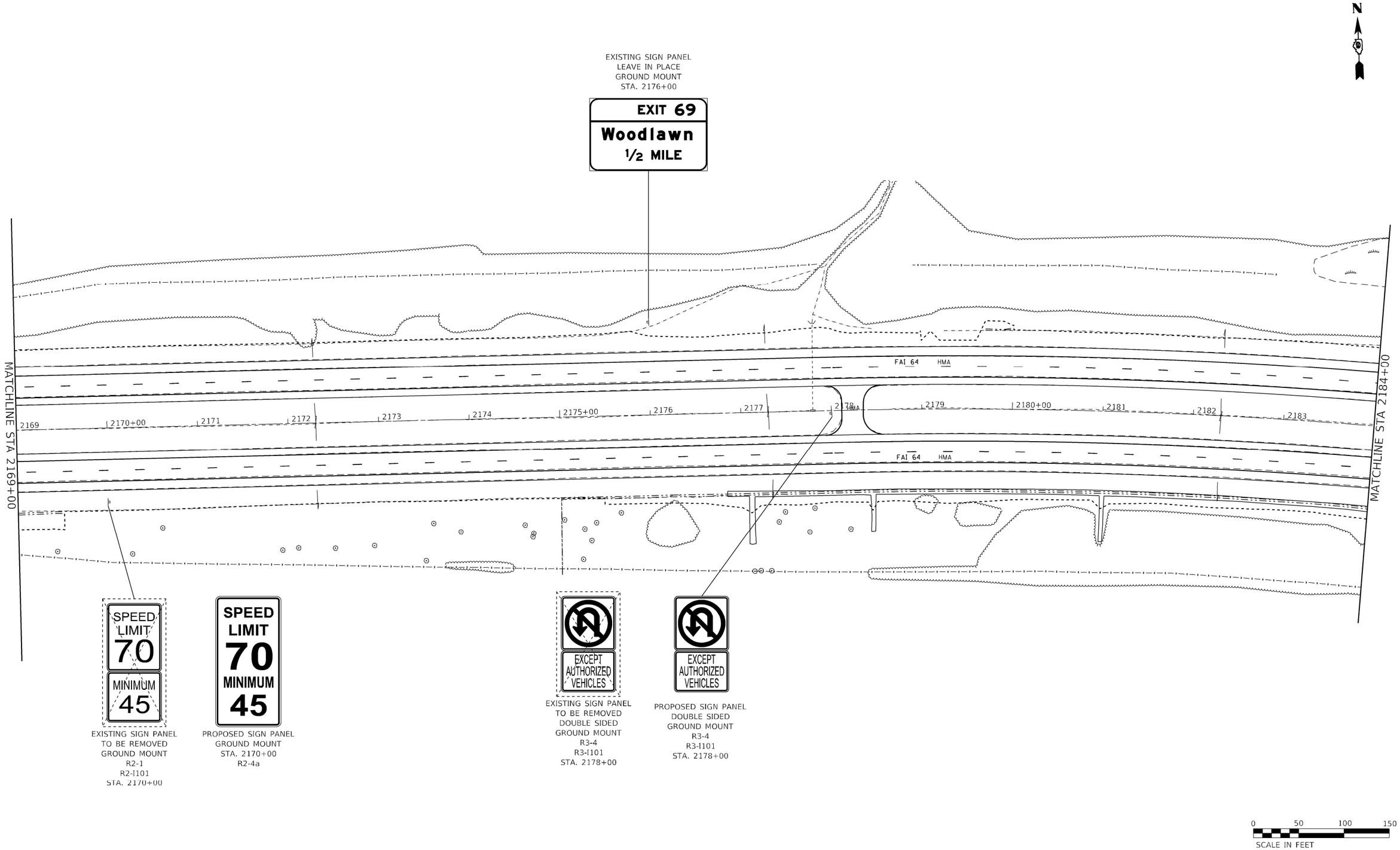

* (41-6,41-6-1,41-7)RS-2;BSMART 2023

MODEL: Default
FILE NAME: ...\D978604-sht-Signing Plan.dgn

Kaskaskia Engineering Group, LLC
200 E. Main St., Suite 100
Belleville, Illinois 62220
618.233.5877 phone
618.233.5977 fax
www.kaskaskiaeng.com
PROFESSIONAL SPECIFICATIONS
Illinois Professional Design Firm
Professional Engineering Group
LICENSE NO.
184.004773
20-5000185

USER NAME = rjo	DESIGNED -	REVISED -	
	DRAWN -	REVISED -	
PLOT SCALE = 100.0000 ' / in.	CHECKED -	REVISED -	
PLOT DATE = 10/20/2022 - 4:09:30 PM	DATE -	REVISED -	

STATE OF ILLINOIS
DEPARTMENT OF TRANSPORTATION

INTERSTATE 64
SIGNING PLAN

SCALE: 1"=50' | SHEET 27 OF 39 SHEETS | STA. 2169+00 TO STA. 2184+00

F.A.I. RTE.	SECTION	COUNTY	TOTAL SHEETS	SHEET NO.
64	*	JEFFERSON	1052	320
		CONTRACT NO. 78604		
		ILLINOIS	FED. AID PROJECT	

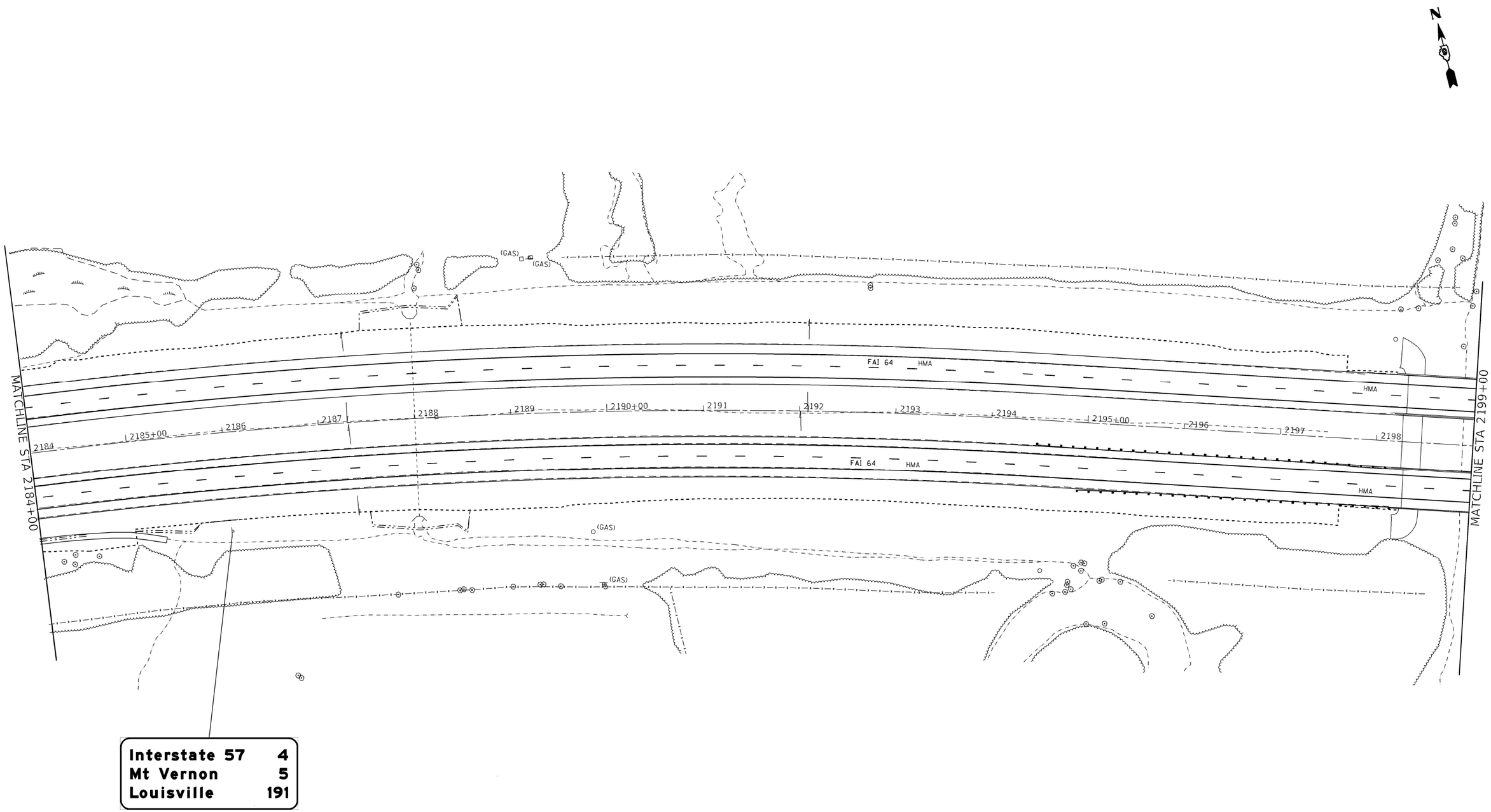

* (41-6,41-6-1,41-7)RS-2;BSMART 2023

MODEL: Default
FILE NAME: ...\D978604-sht-Signing Plan.dgn

Kaskaskia Engineering Group, LLC
PROFESSIONAL SPECIFICATIONS
Illinois Professional Design Firm
Professional Engineering Group
LICENSE NO.
184.004773
20-5000186

USER NAME = rjo	DESIGNED -	REVISED -	
	DRAWN -	REVISED -	
PLOT SCALE = 100.0000 ' / in.	CHECKED -	REVISED -	
PLOT DATE = 10/20/2022 - 4:09:31 PM	DATE -	REVISED -	

STATE OF ILLINOIS
DEPARTMENT OF TRANSPORTATION

INTERSTATE 64
SIGNING PLAN

SCALE: 1"=50' | SHEET 28 OF 39 SHEETS | STA. 2184+00 TO STA. 2199+00

F.A.I. RTE.	SECTION	COUNTY	TOTAL SHEETS	SHEET NO.
64	*	JEFFERSON	1052	321
		CONTRACT NO. 78604		
		ILLINOIS	FED. AID PROJECT	

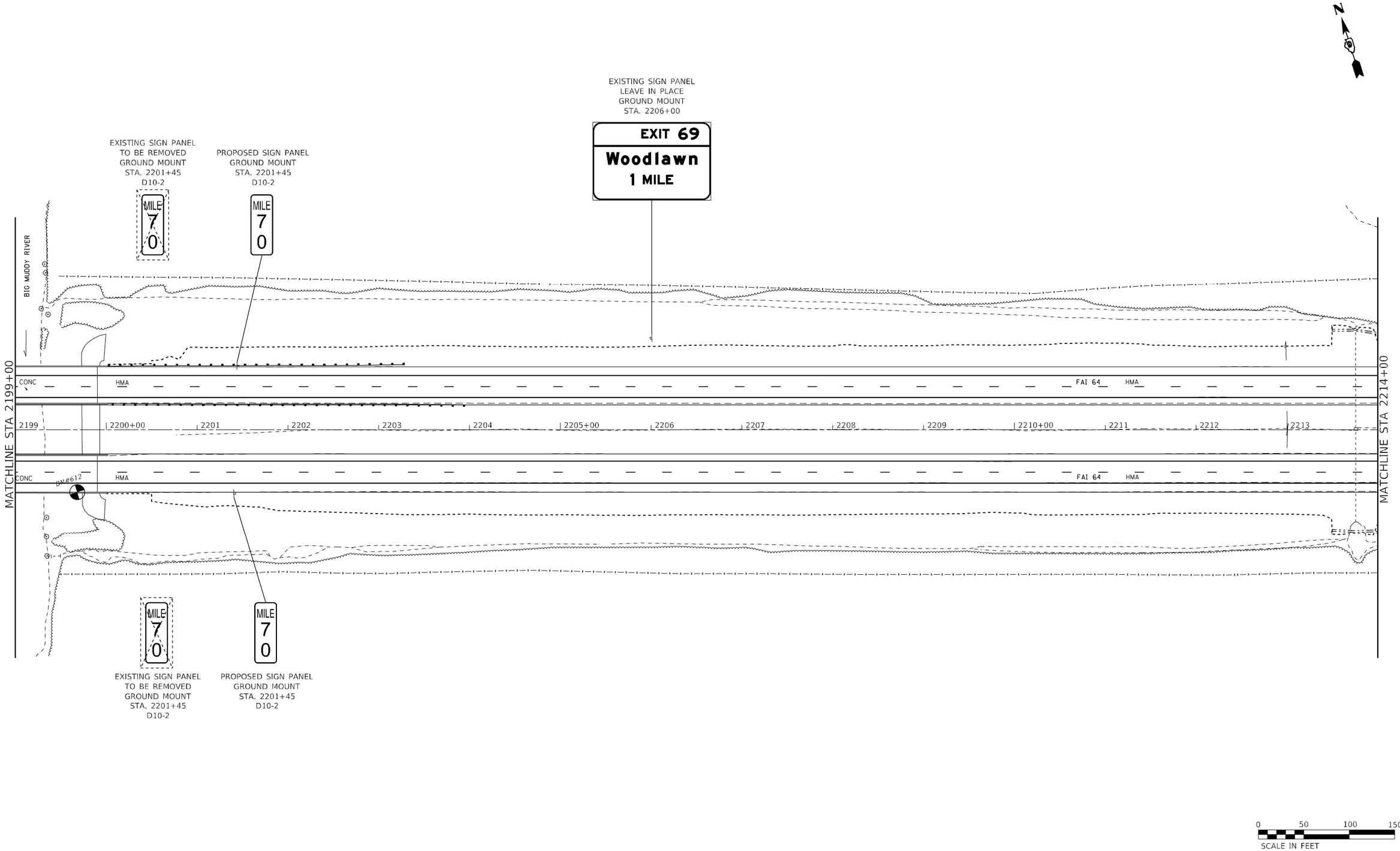

* (41-6,41-6-1,41-7)RS-2;BSMART 2023

MODEL: Default
FILE NAME: ...\D978604-sht-Signing Plan.dgn

Kaskaskia Engineering Group, LLC
PROFESSIONAL REGISTRATIONS
Illinois Professional Design Firm
Professional Engineering Group
LICENSE NO.
184.004773
20-5000165

USER NAME = rjo	DESIGNED -	REVISED -	
	DRAWN -	REVISED -	
PLOT SCALE = 100.0000 ' / in.	CHECKED -	REVISED -	
PLOT DATE = 10/20/2022 - 4:09:32 PM	DATE -	REVISED -	

STATE OF ILLINOIS
DEPARTMENT OF TRANSPORTATION

INTERSTATE 64
SIGNING PLAN

SCALE: 1"=50' | SHEET 29 OF 39 SHEETS | STA. 2199+00 TO STA. 2214+00

F.A.I. RTE.	SECTION	COUNTY	TOTAL SHEETS	SHEET NO.
64	*	JEFFERSON	1052	322
		CONTRACT NO. 78604		
		ILLINOIS	FED. AID PROJECT	

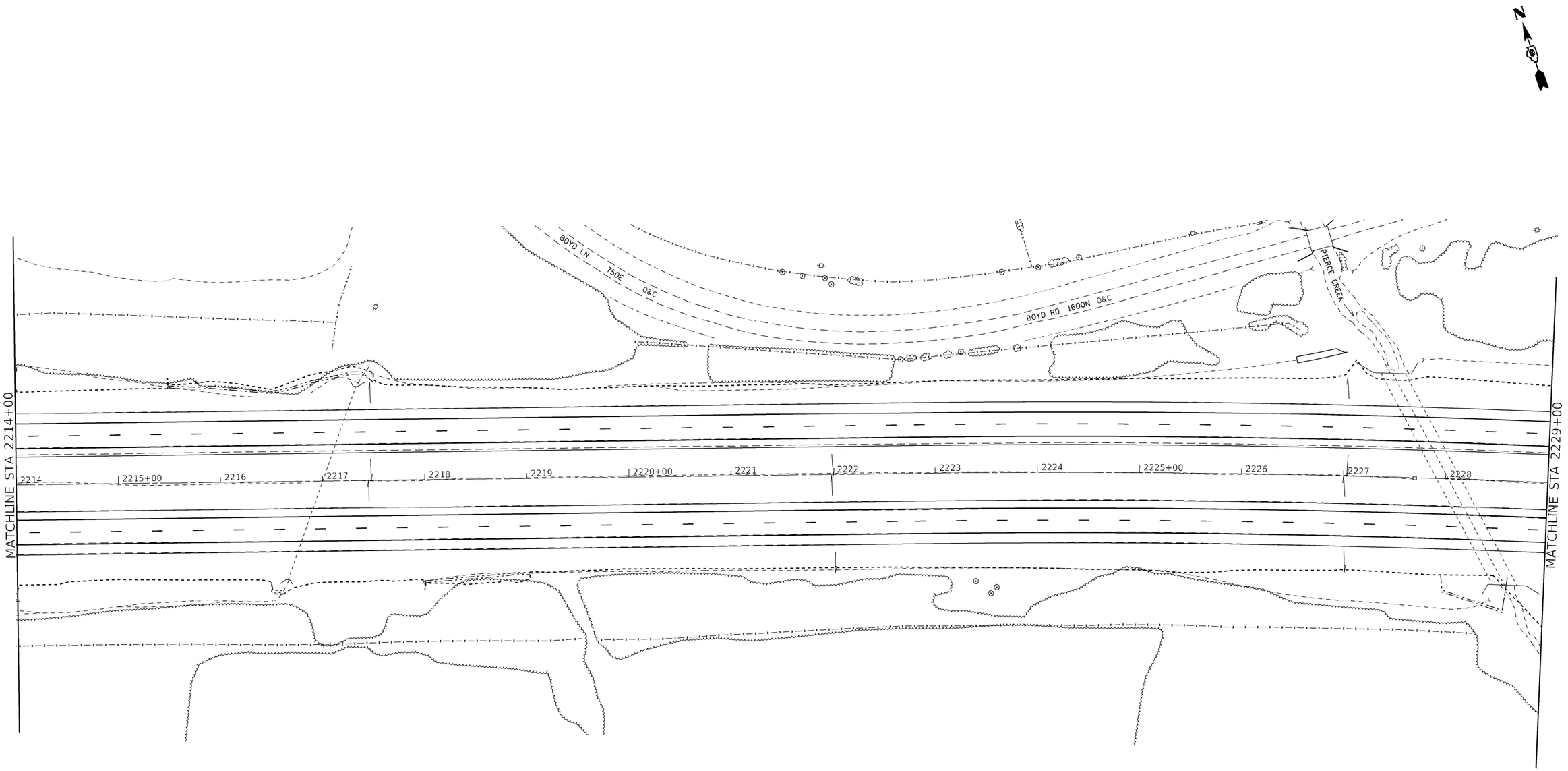

NO PROPOSED WORK SHOWN,
SHEET INCLUDED FOR INFORMATION.

0 50 100 150
SCALE IN FEET

* (41-6,41-6-1,41-7)RS-2;BSMART 2023

MODEL: Default
FILE NAME: ...\D978604-sht-Signing Plan.dgn

Kaskaskia Engineering Group, LLC
200 E. Main St., Suite 100
Belleville, Illinois 62220
618.233.5977 phone
618.233.5977 fax
www.kaskaskiaeng.com
PROFESSIONAL REGISTRATIONS
Illinois Professional Design Firm
Professional Engineering Group
LICENSE NO.
184.004773
20-5000185

USER NAME = rjo	DESIGNED -	REVISED -	
	DRAWN -	REVISED -	
PLOT SCALE = 100.0000 ' / in.	CHECKED -	REVISED -	
PLOT DATE = 10/20/2022 - 4:09:33 PM	DATE -	REVISED -	

STATE OF ILLINOIS
DEPARTMENT OF TRANSPORTATION

INTERSTATE 64
SIGNING PLAN

SCALE: 1"=50' | SHEET 30 OF 39 SHEETS | STA. 2214+00 TO STA. 2229+00

F.A.I. RTE.	SECTION	COUNTY	TOTAL SHEETS	SHEET NO.
64	*	JEFFERSON	1052	323
		CONTRACT NO. 78604		
		ILLINOIS	FED. AID PROJECT	

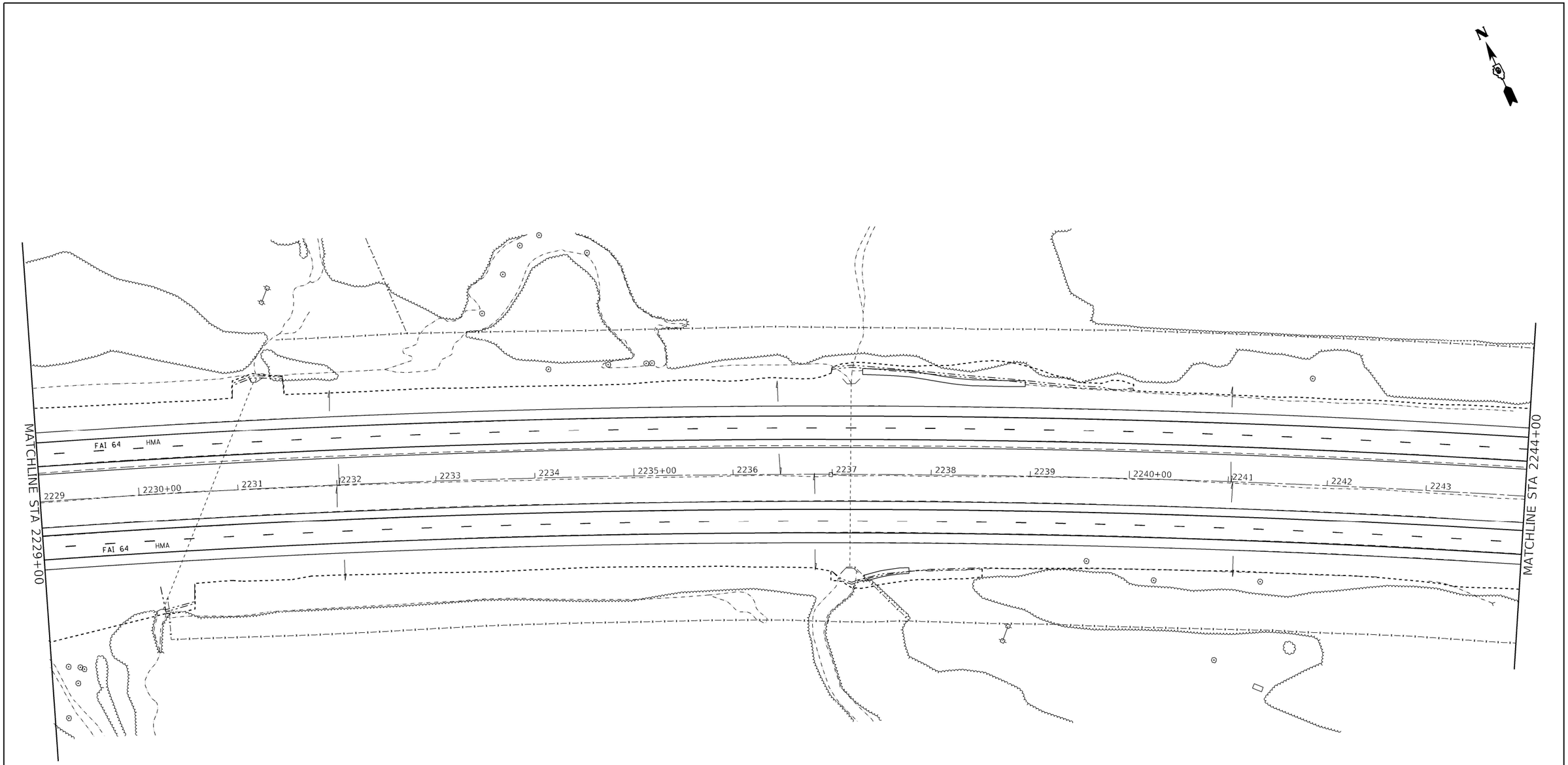

NO PROPOSED WORK SHOWN,
SHEET INCLUDED FOR INFORMATION.

0 50 100 150
SCALE IN FEET

* (41-6,41-6-1,41-7)RS-2;BSMART 2023

MODEL: Default
FILE NAME: ...\D978604-sht-Signing Plan.dgn

Kaskaskia Engineering Group, LLC
PROFESSIONAL ENGINEERING
Illinois Professional Design Firm
Professional Engineering Group

USER NAME = rjo	DESIGNED -	REVISED -	
	DRAWN -	REVISED -	
PLOT SCALE = 100.0000 ' / in.	CHECKED -	REVISED -	
PLOT DATE = 10/20/2022 - 4:09:33 PM	DATE -	REVISED -	

STATE OF ILLINOIS
DEPARTMENT OF TRANSPORTATION

INTERSTATE 64
SIGNING PLAN

SCALE: 1"=50' | SHEET 31 OF 39 SHEETS | STA. 2229+00 TO STA. 2244+00

F.A.I. RTE.	SECTION	COUNTY	TOTAL SHEETS	SHEET NO.
64	*	JEFFERSON	1052	324
		CONTRACT NO. 78604		
		ILLINOIS	FED. AID PROJECT	

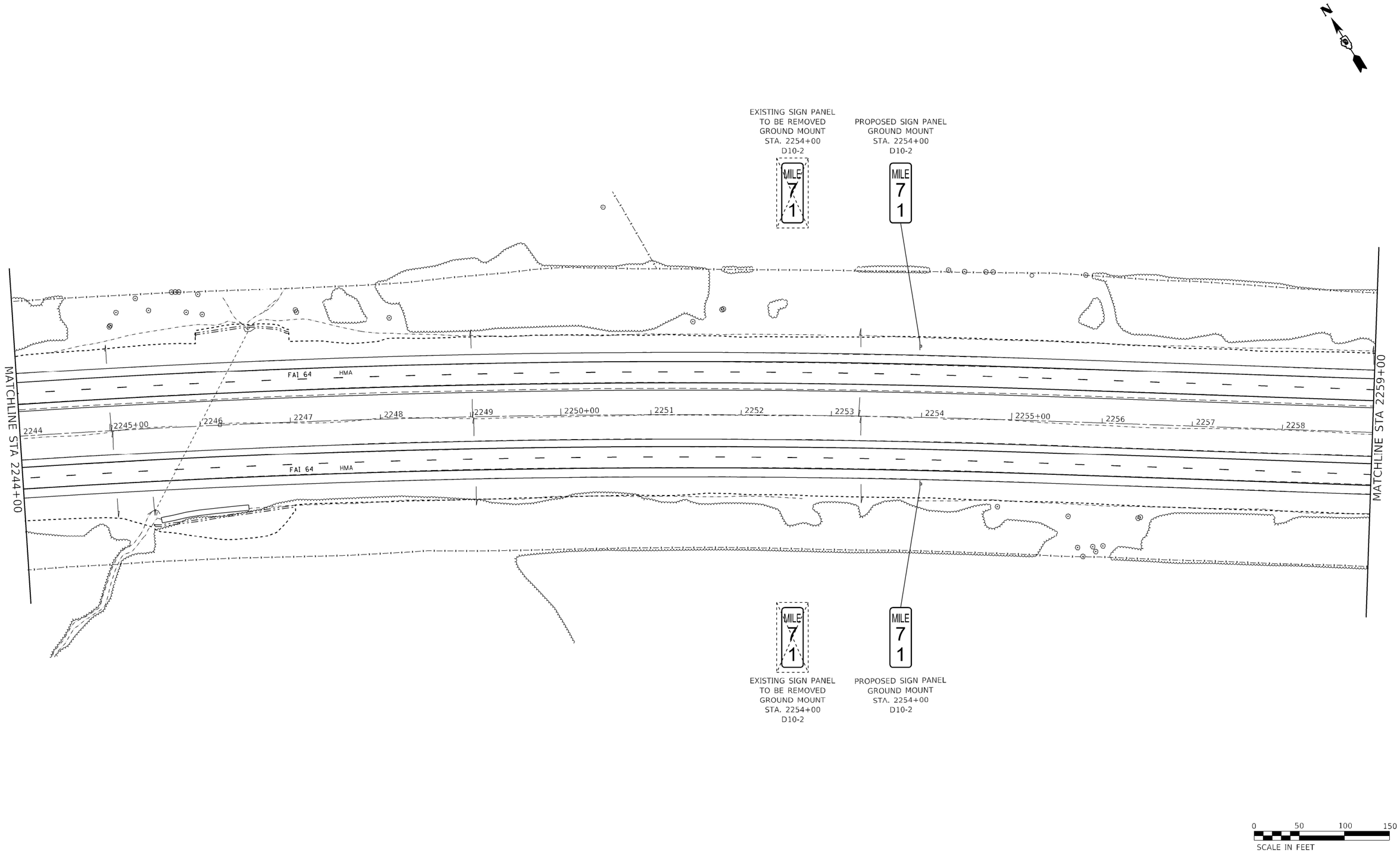

* (41-6,41-6-1,41-7)RS-2;BSMART 2023

MODEL: Default
FILE NAME: ...\D978604-sht-Signing Plan.dgn

Kaskaskia Engineering Group, LLC
PROFESSIONAL REGISTRATIONS
Illinois Professional Design Firm
Professional Engineering Group

USER NAME = rjo	DESIGNED -	REVISED -	
	DRAWN -	REVISED -	
PLOT SCALE = 100.0000 ' / in.	CHECKED -	REVISED -	
PLOT DATE = 10/20/2022 - 4:09:34 PM	DATE -	REVISED -	

STATE OF ILLINOIS
DEPARTMENT OF TRANSPORTATION

INTERSTATE 64
SIGNING PLAN

SCALE: 1"=50' | SHEET 32 OF 39 SHEETS | STA. 2244+00 TO STA. 2259+00

F.A.I. RTE.	SECTION	COUNTY	TOTAL SHEETS	SHEET NO.
64	*	JEFFERSON	1052	325

CONTRACT NO. 78604

ILLINOIS | FED. AID PROJECT

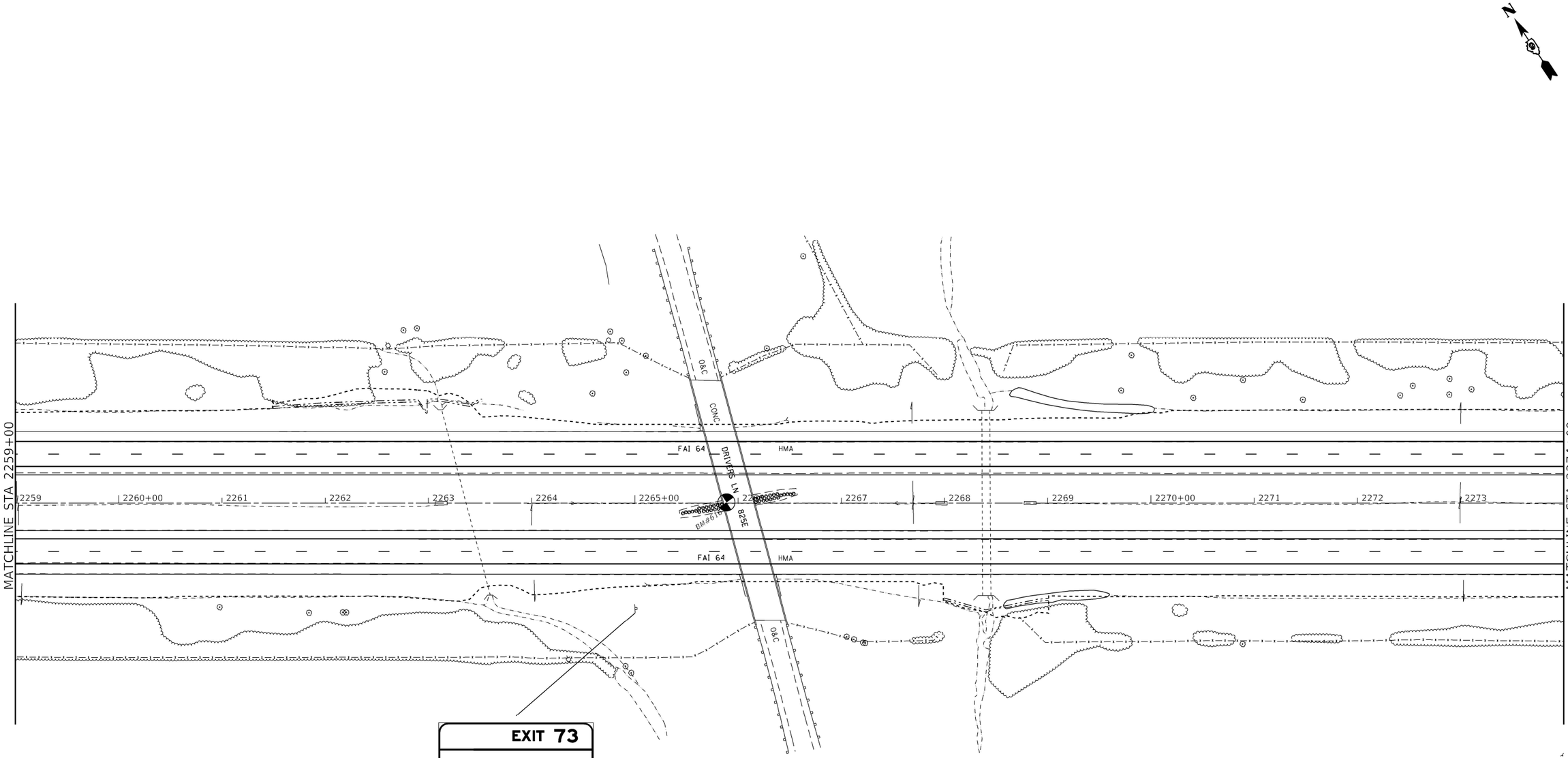

EXISTING SIGN PANEL
LEAVE IN PLACE
GROUND MOUNT
STA. 2265+00

NO PROPOSED WORK SHOWN,
SHEET INCLUDED FOR INFORMATION.

0 50 100 150
SCALE IN FEET

* (41-6,41-6-1,41-7)RS-2;BSMART 2023

MODEL: Default
FILE NAME: ...\D978604-sht-Signing Plan.dgn

Kaskaskia Engineering Group, LLC
PROFESSIONAL REGISTRATIONS
Illinois Professional Design Firm
Professional Engineering Group
LICENSE NO.
184.004773
20-5000165

USER NAME = rjo	DESIGNED -	REVISED -	
	DRAWN -	REVISED -	
PLOT SCALE = 100.0000 ' / in.	CHECKED -	REVISED -	
PLOT DATE = 10/20/2022 - 4:09:35 PM	DATE -	REVISED -	

STATE OF ILLINOIS
DEPARTMENT OF TRANSPORTATION

INTERSTATE 64
SIGNING PLAN

SCALE: 1"=50' | SHEET 33 OF 39 SHEETS | STA. 2259+00 TO STA. 2274+00

F.A.I. RTE.	SECTION	COUNTY	TOTAL SHEETS	SHEET NO.
64	*	JEFFERSON	1052	326
		CONTRACT NO. 78604		
		ILLINOIS	FED. AID PROJECT	

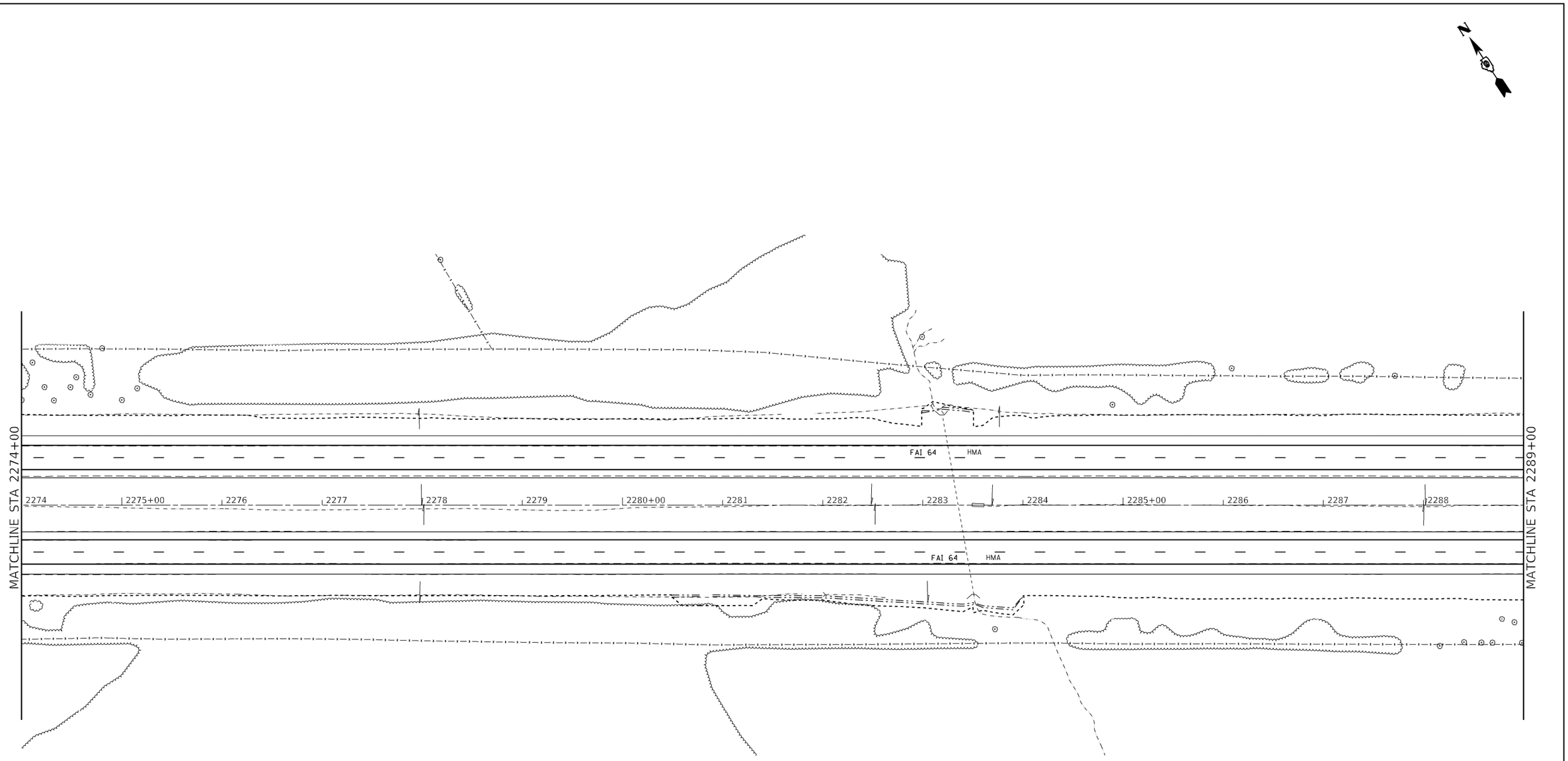

NO PROPOSED WORK SHOWN,
SHEET INCLUDED FOR INFORMATION.

0 50 100 150
SCALE IN FEET

* (41-6,41-6-1,41-7)RS-2;BSMART 2023

MODEL: Default
FILE NAME: ...\D978604-sht-Signing Plan.dgn

Kaskaskia Engineering Group, LLC
PROFESSIONAL SPECIFICATIONS
Illinois Professional Design Firm
Professional Engineering Group

USER NAME = rjo	DESIGNED -	REVISED -	
	DRAWN -	REVISED -	
PLOT SCALE = 100.0000 ' / in.	CHECKED -	REVISED -	
PLOT DATE = 10/20/2022 - 4:09:36 PM	DATE -	REVISED -	

STATE OF ILLINOIS
DEPARTMENT OF TRANSPORTATION

INTERSTATE 64
SIGNING PLAN

SCALE: 1"=50' | SHEET 34 OF 39 SHEETS | STA. 2274+00 TO STA. 2289+00

F.A.I. RTE.	SECTION	COUNTY	TOTAL SHEETS	SHEET NO.
64	*	JEFFERSON	1052	327
		CONTRACT NO. 78604		
		ILLINOIS	FED. AID PROJECT	

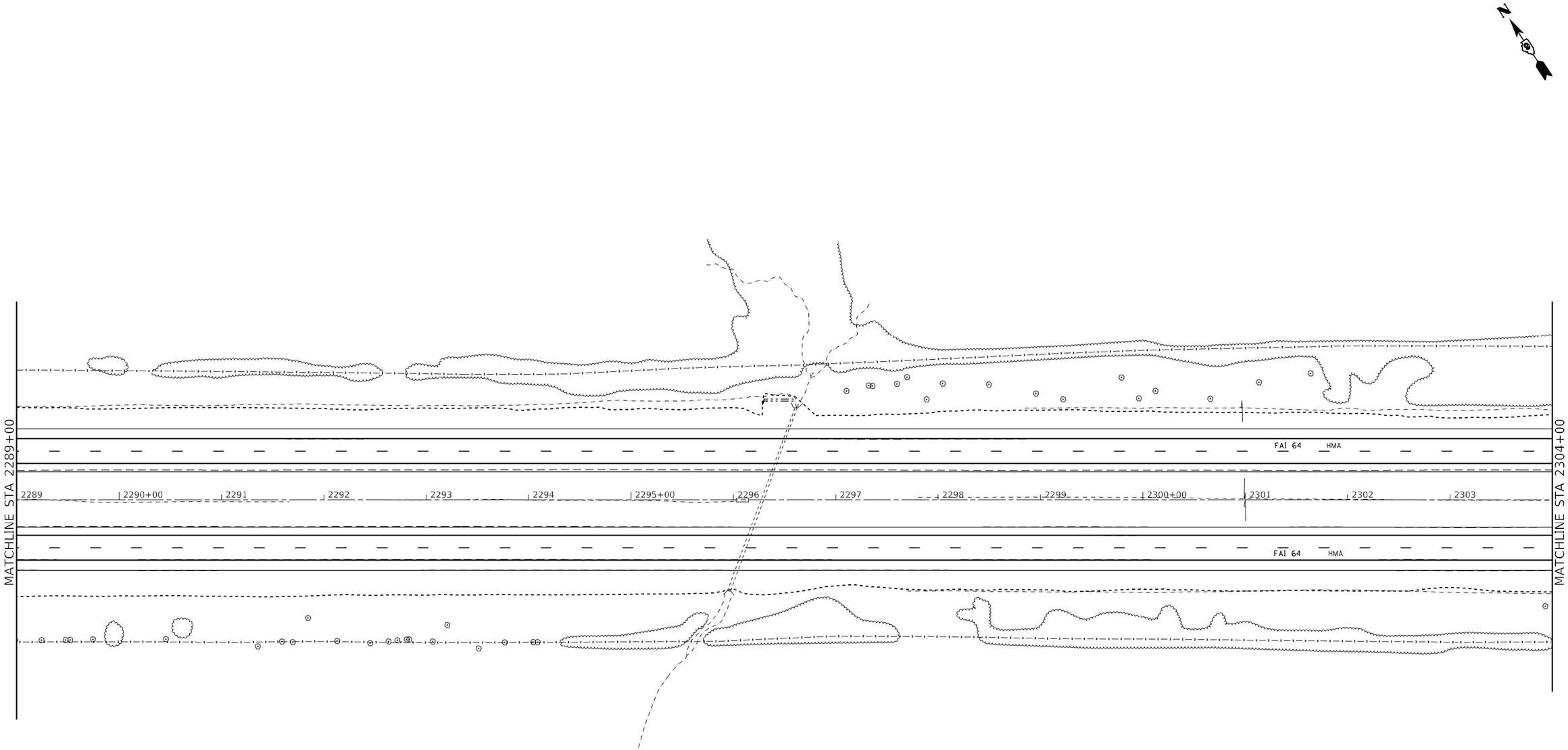

NO PROPOSED WORK SHOWN,
SHEET INCLUDED FOR INFORMATION.

0 50 100 150
SCALE IN FEET

* (41-6,41-6-1,41-7)RS-2;BSMART 2023

MODEL: Default
FILE NAME: ...\D978604-sht-Signing Plan.dgn

Kaskaskia Engineering Group, LLC
PROFESSIONAL SIGNATURES
Illinois Professional Design Firm
Professional Engineering Group
LICENSE NO.
184.004773
20-5000185

USER NAME = rjo	DESIGNED -	REVISED -	
	DRAWN -	REVISED -	
PLOT SCALE = 100.0000 ' / in.	CHECKED -	REVISED -	
PLOT DATE = 10/20/2022 - 4:09:37 PM	DATE -	REVISED -	

STATE OF ILLINOIS
DEPARTMENT OF TRANSPORTATION

INTERSTATE 64
SIGNING PLAN

SCALE: 1"=50' | SHEET 35 OF 39 SHEETS | STA. 2289+00 TO STA. 2304+00

F.A.I. RTE.	SECTION	COUNTY	TOTAL SHEETS	SHEET NO.
64	*	JEFFERSON	1052	328
		CONTRACT NO. 78604		
		ILLINOIS	FED. AID PROJECT	

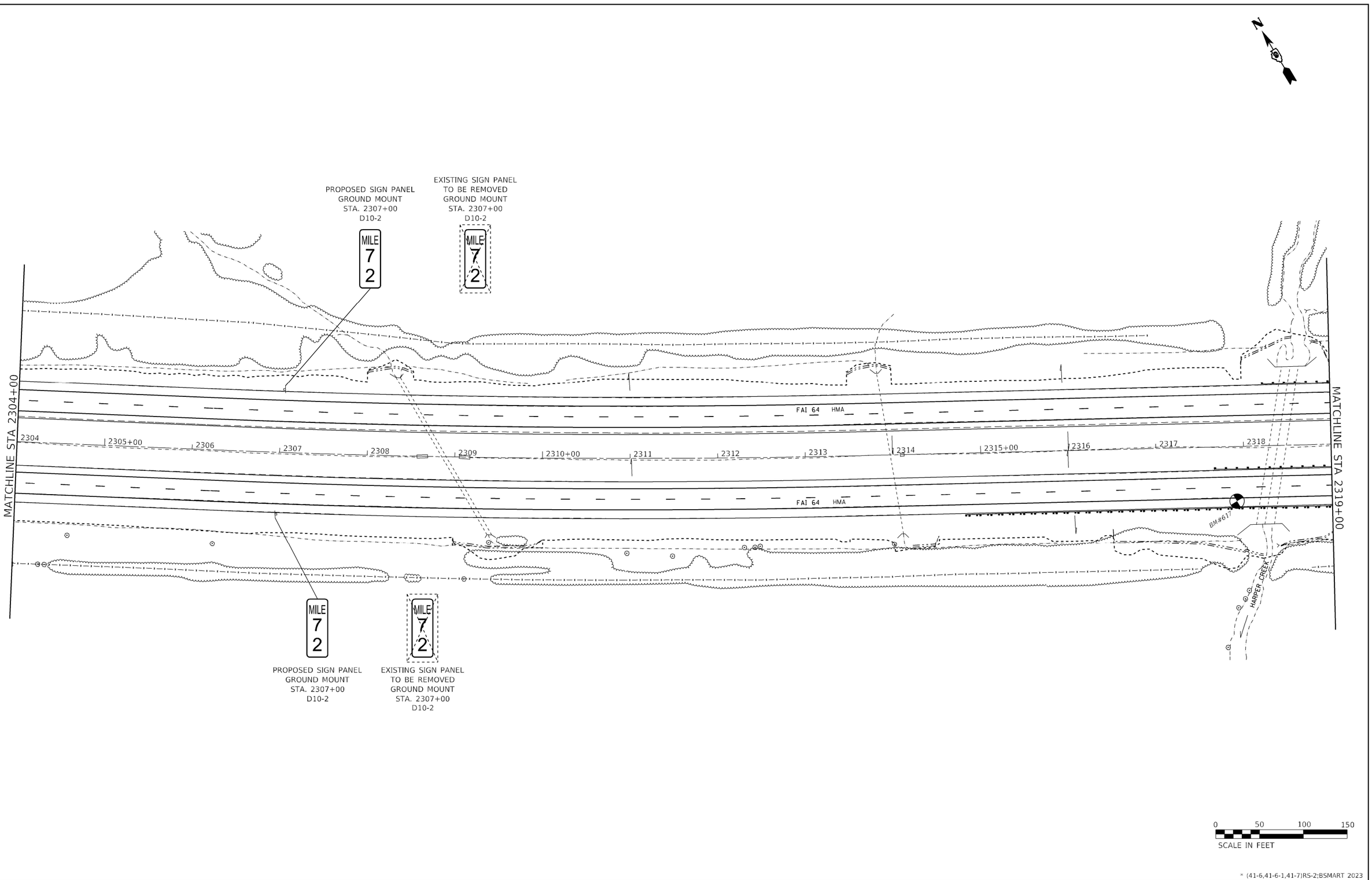

* (41-6,41-6-1,41-7)RS-2;BSMART 2023

MODEL: Default
FILE NAME: ...\D978604-sht-Signing Plan.dgn

Kaskaskia Engineering Group, LLC
PROFESSIONAL SIGNATURES
Illinois Professional Design Firm
Professional Engineering Group
LICENSE NO.
184.004715
20-5000185

USER NAME = rjo	DESIGNED -	REVISED -	
	DRAWN -	REVISED -	
PLOT SCALE = 100.0000 ' / in.	CHECKED -	REVISED -	
PLOT DATE = 10/20/2022 - 4:09:38 PM	DATE -	REVISED -	

STATE OF ILLINOIS
DEPARTMENT OF TRANSPORTATION

INTERSTATE 64
SIGNING PLAN

SCALE: 1"=50' | SHEET 36 OF 39 SHEETS | STA. 2304+00 TO STA. 2319+00

F.A.I. RTE.	SECTION	COUNTY	TOTAL SHEETS	SHEET NO.
64	*	JEFFERSON	1052	329
		CONTRACT NO. 78604		
		ILLINOIS	FED. AID PROJECT	

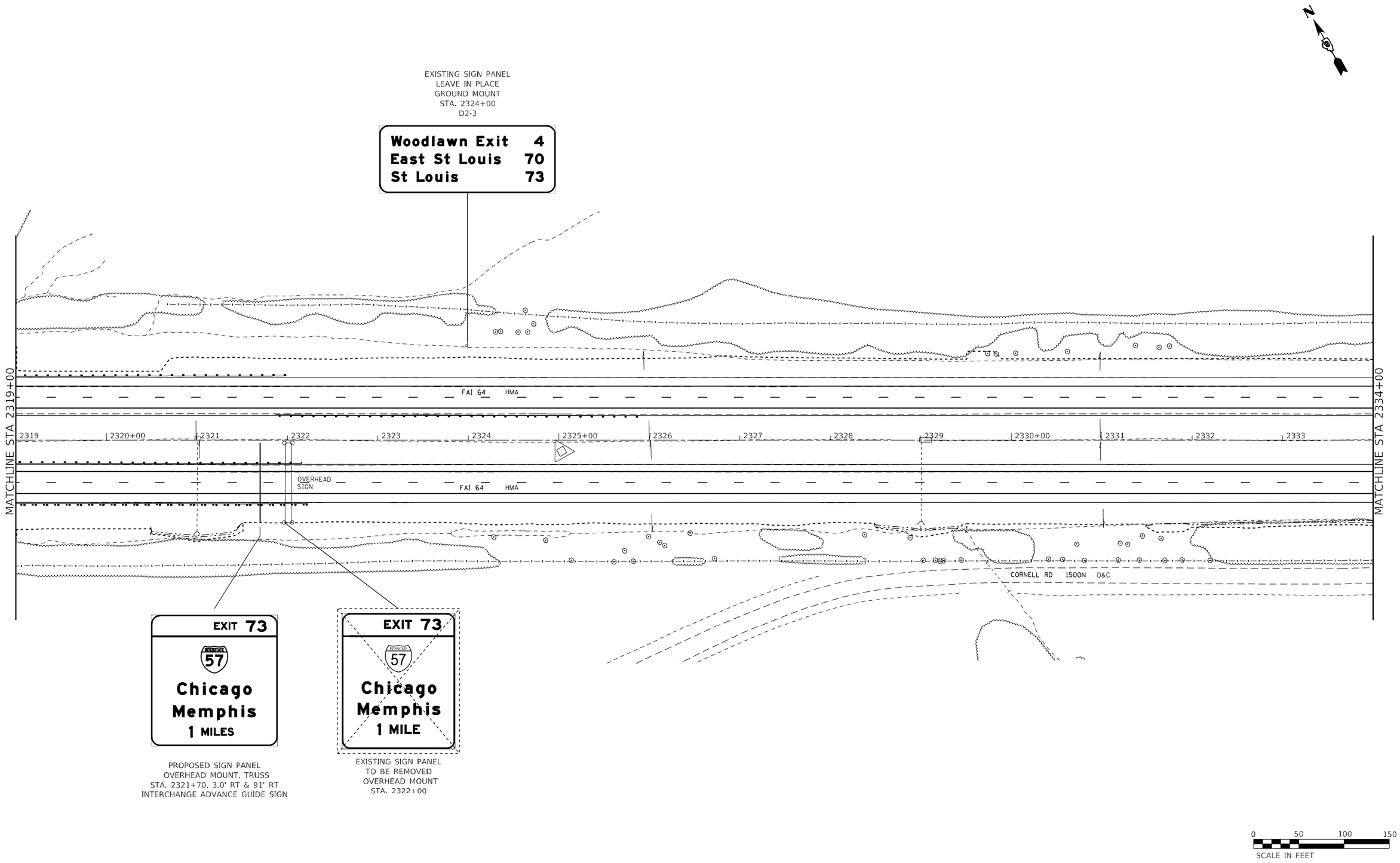

* (41-6,41-6-1,41-7)RS-2;BSMART 2023

MODEL: Default
FILE NAME: ...\D978604-sht-Signing Plan.dgn

Kaskaskia Engineering Group, LLC
PROFESSIONAL SECRETARY(S) LICENSE NO.
Illinois Professional Design Firm 184.004773
Professional Engineering Group 20-5880185

USER NAME = rjo	DESIGNED -	REVISED -	
	DRAWN -	REVISED -	
PLOT SCALE = 100.0000 ' / in.	CHECKED -	REVISED -	
PLOT DATE = 10/20/2022 - 4:09:39 PM	DATE -	REVISED -	

STATE OF ILLINOIS
DEPARTMENT OF TRANSPORTATION

INTERSTATE64
SIGNING PLAN

SCALE: 1"=50' | SHEET 37 OF 39 SHEETS | STA. 2319+00 TO STA. 2334+00

F.A.I. RTE.	SECTION	COUNTY	TOTAL SHEETS	SHEET NO.
64	*	JEFFERSON	1052	330
		CONTRACT NO. 78604		
		ILLINOIS	FED. AID PROJECT	

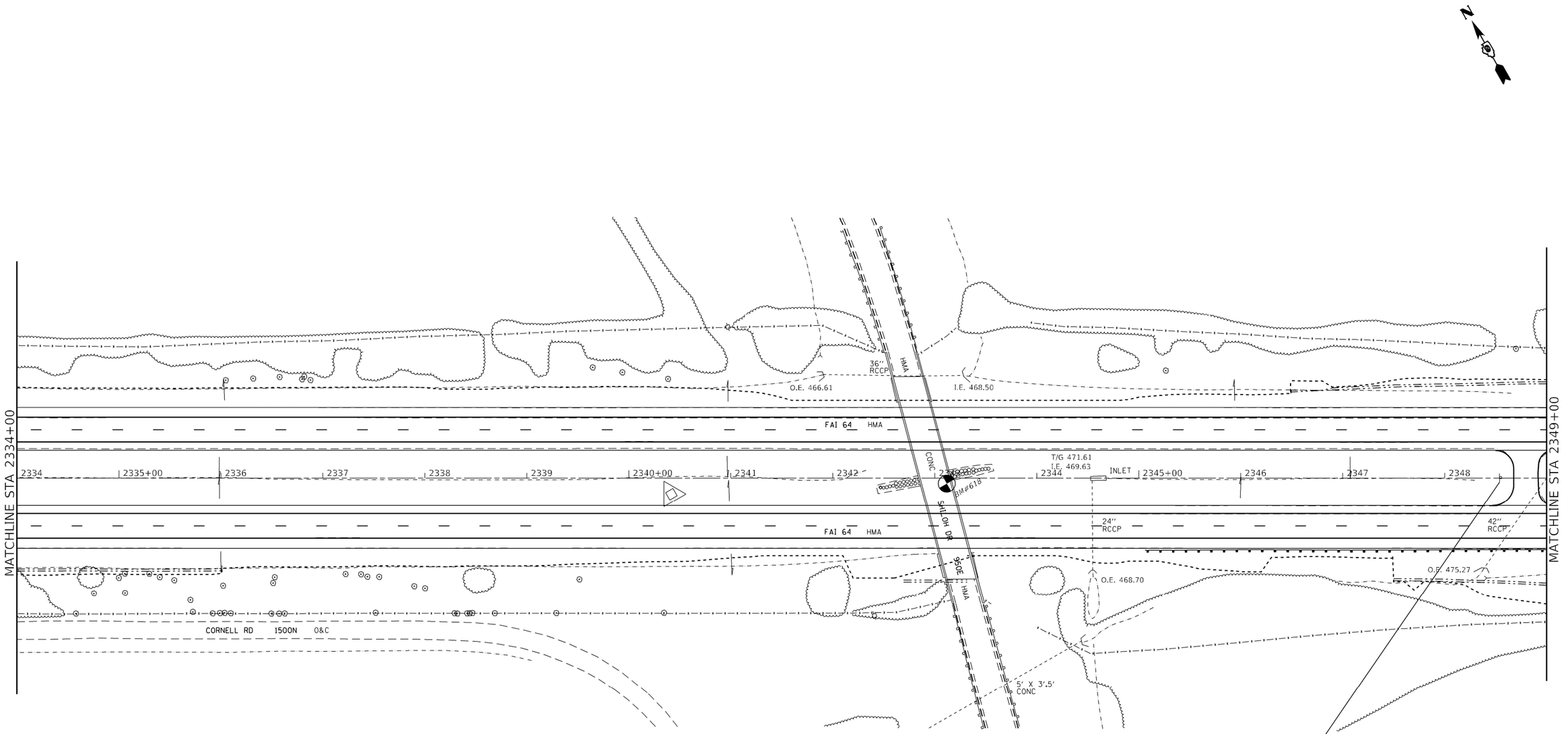



EXISTING SIGN PANEL
TO BE REMOVED
DOUBLE SIDED
GROUND MOUNT
R3-4
R3-I101
STA. 2348+50



PROPOSED SIGN PANEL
DOUBLE SIDED
GROUND MOUNT
R3-4
R3-I101
STA. 2348+50

0 50 100 150
SCALE IN FEET

* (41-6,41-6-1,41-7)RS-2;BSMART 2023

MODEL: Default
FILE NAME: ...\D978604-sht-Signing Plan.dgn

Kaskaskia Engineering Group, LLC
PROFESSIONAL ENGINEERING LICENSE NO. 184.004773
Illinois Professional Design Firm
Professional Engineering Group
LICENSE NO. 20-5000185

USER NAME = rjo	DESIGNED -	REVISED -	
	DRAWN -	REVISED -	
PLOT SCALE = 100.0000 ' / in.	CHECKED -	REVISED -	
PLOT DATE = 10/20/2022 - 4:09:40 PM	DATE -	REVISED -	

STATE OF ILLINOIS
DEPARTMENT OF TRANSPORTATION

INTERSTATE 64
SIGNING PLAN

SCALE: 1"=50' | SHEET 38 OF 39 SHEETS | STA. 2334+00 TO STA. 2349+00

F.A.I. RTE.	SECTION	COUNTY	TOTAL SHEETS	SHEET NO.
64	*	JEFFERSON	1052	331

CONTRACT NO. 78604

ILLINOIS FED. AID PROJECT

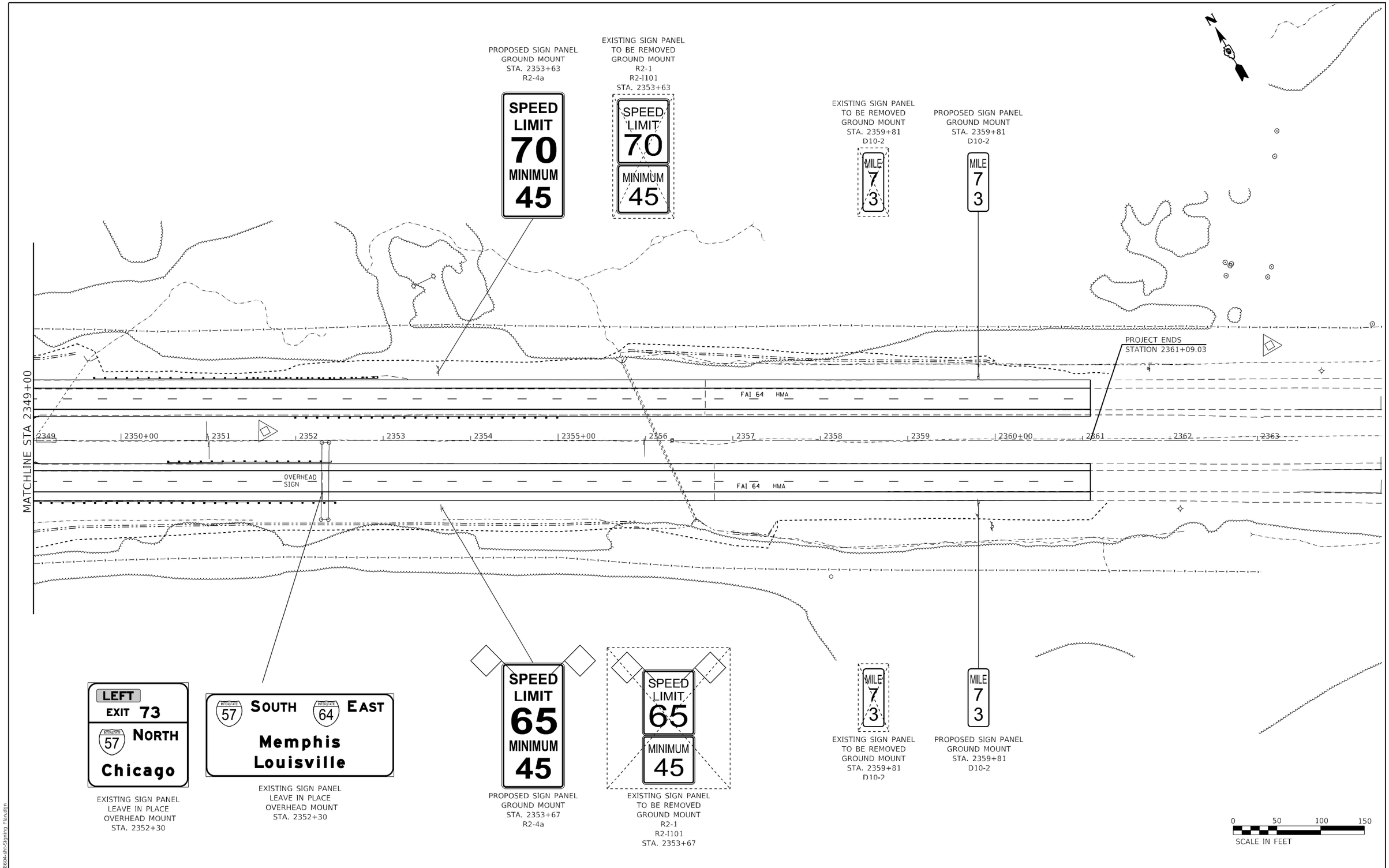

* (41-6,41-6-1,41-7)RS-2;BSMART 2023

MODEL: Default
FILE NAME: ...\D978604-sht-Signing Plan.dgn

Kaskaskia Engineering Group, LLC
PROFESSIONAL REGISTRATIONS
Illinois Professional Design Firm
Professional Engineering Group

USER NAME = rjo	DESIGNED -	REVISED -	STATE OF ILLINOIS DEPARTMENT OF TRANSPORTATION
	DRAWN -	REVISED -	
PLOT SCALE = 100.0000 ' / in.	CHECKED -	REVISED -	
PLOT DATE = 10/20/2022 - 4:09:41 PM	DATE -	REVISED -	

INTERSTATE 64
SIGNING PLAN

SCALE: 1"=50' | SHEET 39 OF 39 SHEETS | STA. 2349+00 TO STA. 2363+00

F.A.I. RTE.	SECTION	COUNTY	TOTAL SHEETS	SHEET NO.
64	*	JEFFERSON	1052	332
		CONTRACT NO. 78604		
		ILLINOIS FED. AID PROJECT		

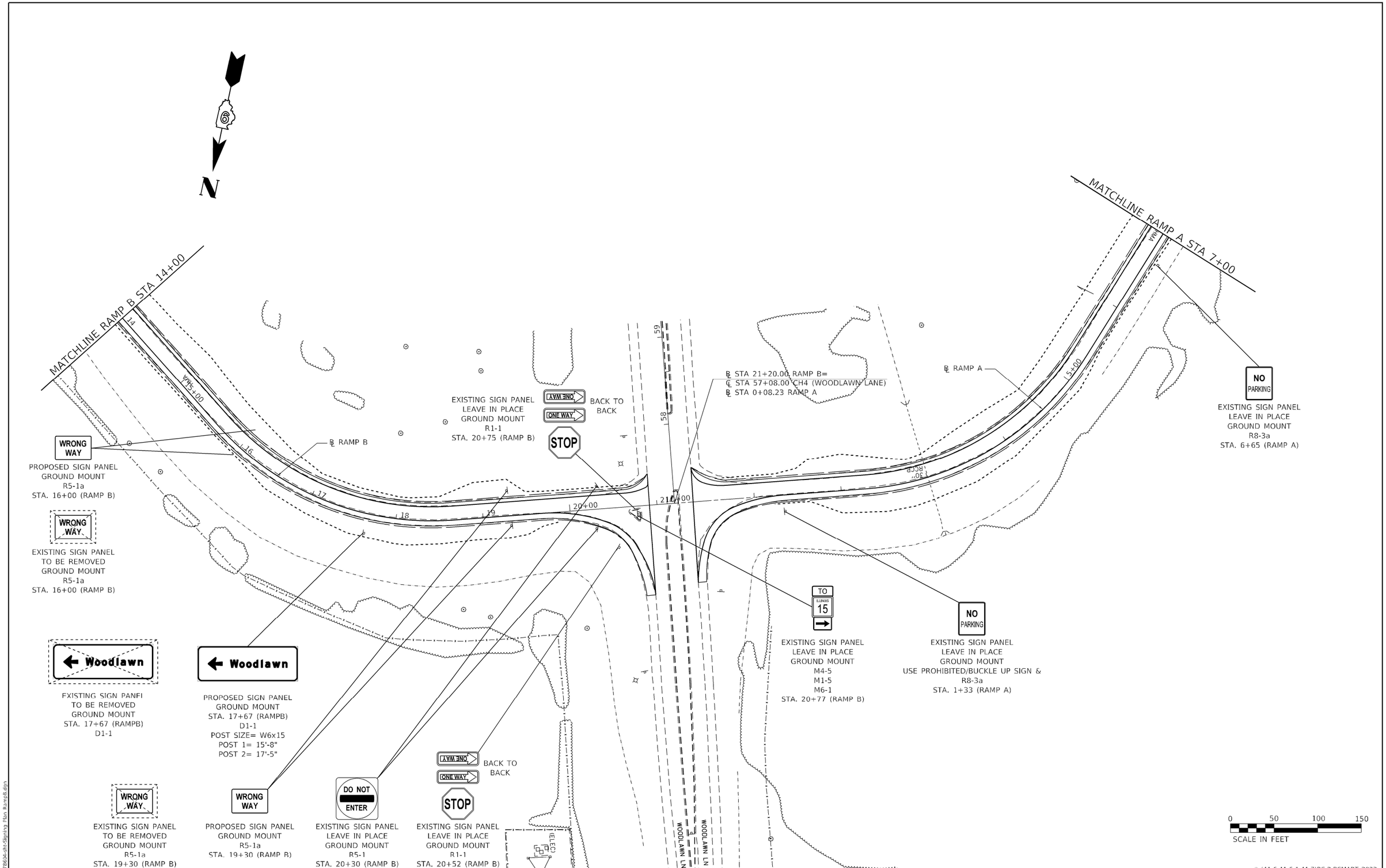

* (41-6,41-6-1,41-7)RS-2;BSMART 2023

MODEL: Default
FILE NAME: ...\D978604-sht-Signing Plan RampB.dgn

Kaskaskia Engineering Group, LLC
208 E. Main St., Suite 100
Belleville, Illinois 62220
618.233.5877 phone
618.233.5977 fax
www.kaskaskiaeng.com
PROFESSIONAL REGISTRATIONS
Illinois Professional Design Firm
Professional Engineering Group
LICENSE NO.
184.004773
20-5000186

USER NAME = rjo	DESIGNED -	REVISED -	
	DRAWN -	REVISED -	
PLOT SCALE = 100.0000 ' / in.	CHECKED -	REVISED -	
PLOT DATE = 10/20/2022 - 4:09:43 PM	DATE -	REVISED -	

STATE OF ILLINOIS
DEPARTMENT OF TRANSPORTATION

INTERSTATE 64
SIGNING PLAN RAMP A & RAMP B

SCALE: 1"=50' | SHEET 1 OF 1 SHEETS | STA. 14+00 (R_B) TO STA. 7+00 (R_A)

F.A.I. RTE.	SECTION	COUNTY	TOTAL SHEETS	SHEET NO.
64	*	JEFFERSON	1052	333
		CONTRACT NO. 78604		
		ILLINOIS	FED. AID PROJECT	

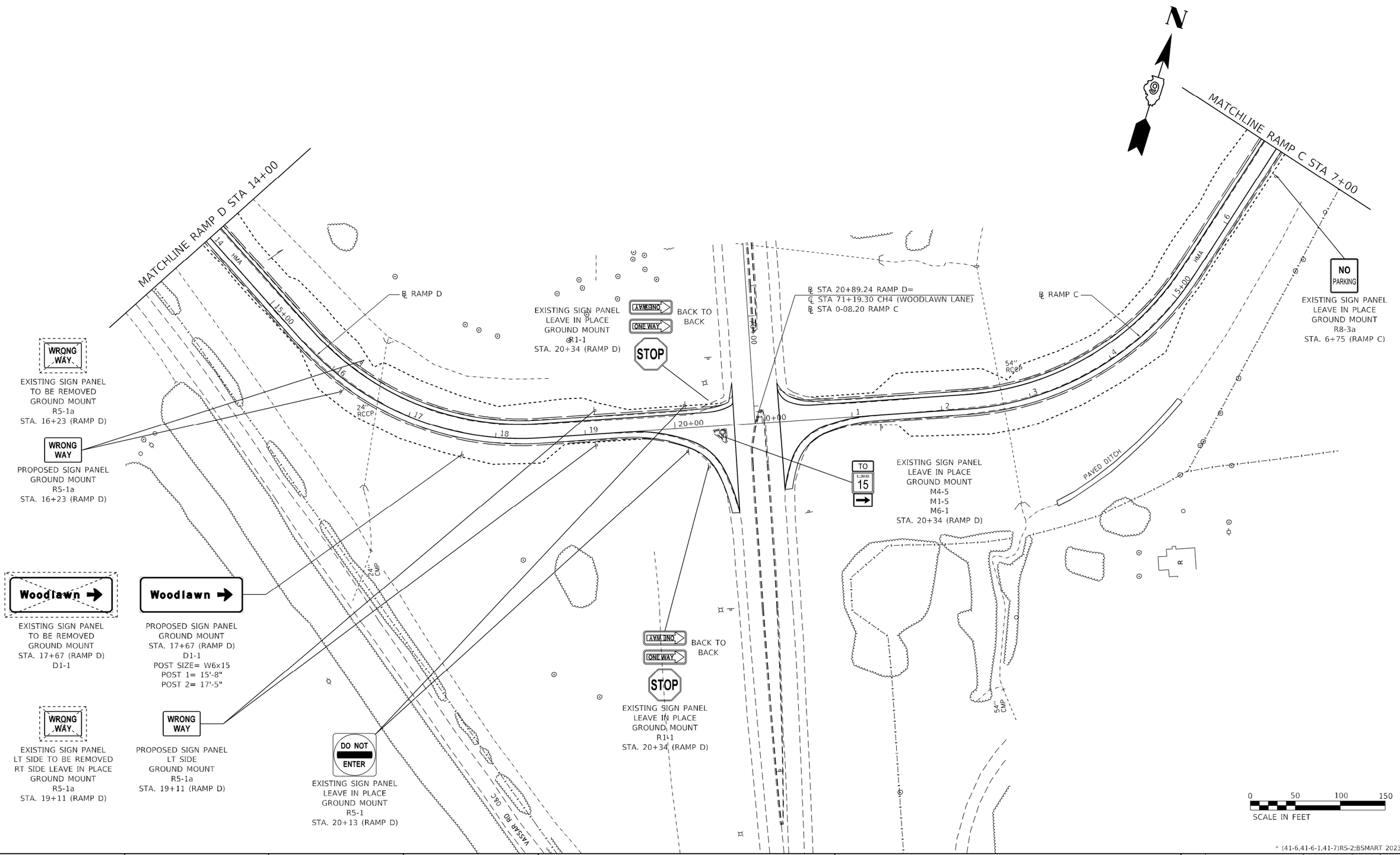

* (41-6,41-6-1,41-7)RS-2;BSMART 2023

MODEL: Default
FILE NAME: ...\D978604-sht-Signing Plan RampD.dgn

Kaskaskia Engineering Group, LLC
PROFESSIONAL REGISTRATIONS
Illinois Professional Design Firm
Professional Engineering Group
LICENSE NO.
184.004773
20-5000186

USER NAME = rjo	DESIGNED -	REVISED -	
	DRAWN -	REVISED -	
PLOT SCALE = 100.0000 ' / in.	CHECKED -	REVISED -	
PLOT DATE = 10/20/2022 - 4:09:44 PM	DATE -	REVISED -	

STATE OF ILLINOIS
DEPARTMENT OF TRANSPORTATION

INTERSTATE 64
SIGNING PLAN RAMP C & RAMP D

SCALE: 1"=50' | SHEET 1 OF 1 SHEETS | STA. 14+00 (R_D) TO STA. 7+00 (R_C)

F.A.I. RTE.	SECTION	COUNTY	TOTAL SHEETS	SHEET NO.
64	*	JEFFERSON	1052	334
		CONTRACT NO. 78604		
		ILLINOIS	FED. AID PROJECT	

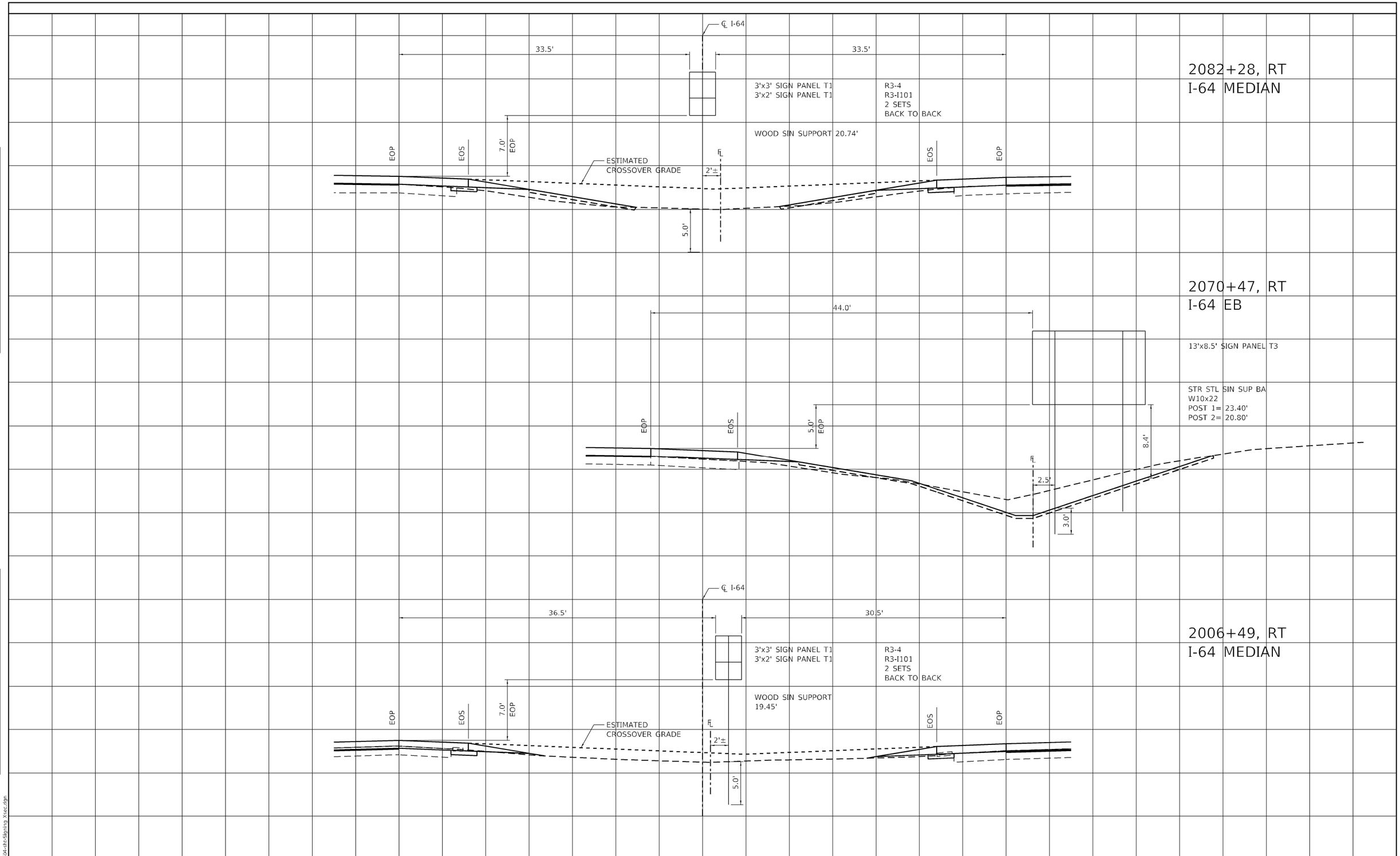

FINAL SURVEY | NOTE BOOK NO. | SURVEYED | PLOTTED | TEMPLATE | AREAS | AREAS CHECKED | BY | DATE

ORIGINAL SURVEY | NOTE BOOK NO. | SURVEYED | PLOTTED | TEMPLATE | AREAS | AREAS CHECKED | BY | DATE

MODEL: Default
FILE NAME: ...\D978604-sht-Signing Xsec.dgn

* (41-6,41-6-1,41-7)RS-2;BSMART 2023

Kaskaskia Engineering Group, LLC
PROFESSIONAL ENGINEERING LICENSE NO.
Illinois Professional Design Firm 184.001773
Professional Engineering Group 20-5000565

USER NAME = rjo	DESIGNED -	REVISED -	
	DRAWN -	REVISED -	
PLOT SCALE = 10.0000 ' / in.	CHECKED -	REVISED -	
PLOT DATE = 10/20/2022 - 4:09:51 PM	DATE -	REVISED -	

STATE OF ILLINOIS
DEPARTMENT OF TRANSPORTATION

INTERSTATE 64
SIGNING CROSS SECTIONS

SCALE: 1"=50' | SHEET 1 OF 5 SHEETS | STA. | TO STA.

F.A.I. RTE.	SECTION	COUNTY	TOTAL SHEETS	SHEET NO.
64	*	JEFFERSON	1052	335

CONTRACT NO. 78604

ILLINOIS | FED. AID PROJECT

2113+00, LT
I-64 WB

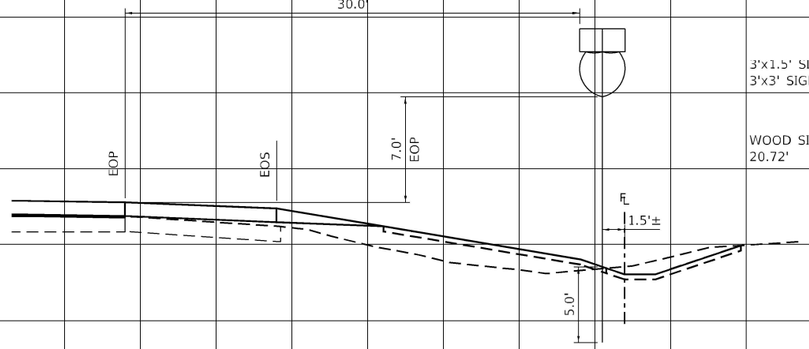

3'x1.5' SIGN PANEL T1 — M3-4
3'x3' SIGN PANEL T1 — M1-1

WOOD SIN SUPPORT
20.72'

2127+50, LT
I-64 WB

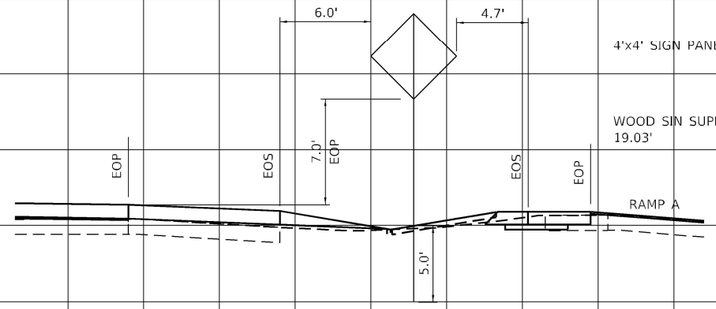

4'x4' SIGN PANEL T3 — W4-1

WOOD SIN SUPPORT
19.03'

2108+00, LT
I-64 WB

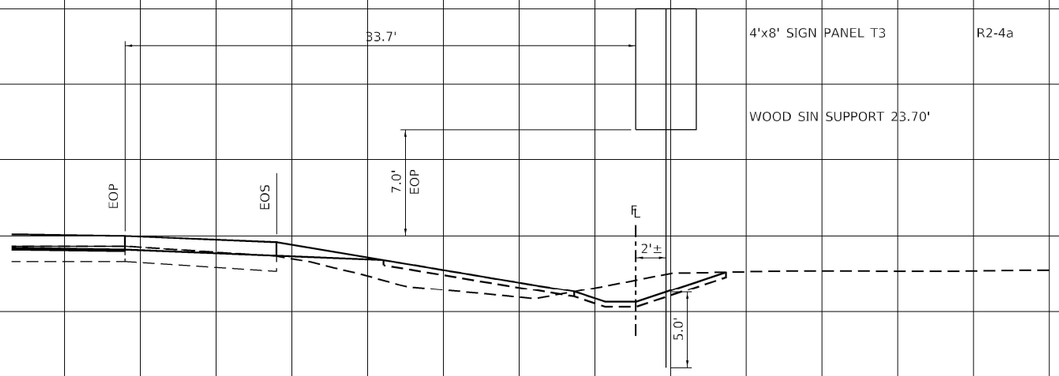

4'x8' SIGN PANEL T3 — R2-4a

WOOD SIN SUPPORT 23.70'

2127+00, RT
I-64 EB

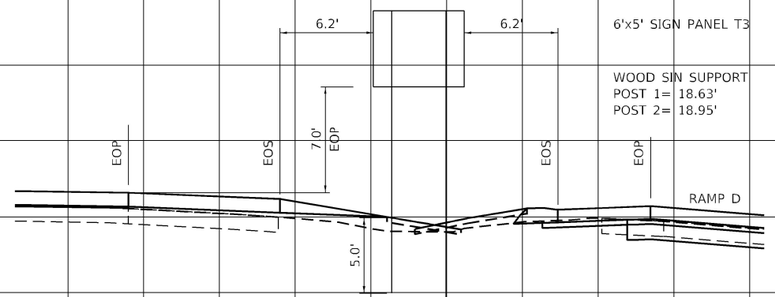

6'x5' SIGN PANEL T3 — E5-1a

WOOD SIN SUPPORT
POST 1= 18.63'
POST 2= 18.95'

2093+15, LT
I-64 WB

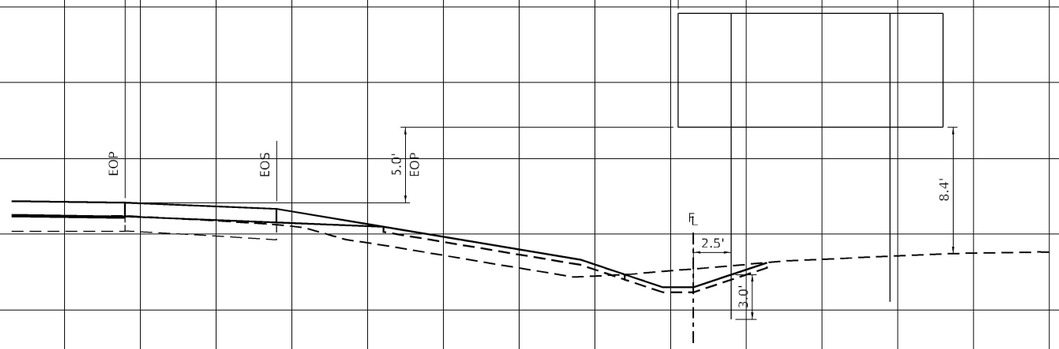

17.5'x7.5' SIGN PANEL T3

STR STL SIN SUP BA
W10x22
POST 1= 20.23'
POST 2= 19.02'

5+31, RT
RAMP D

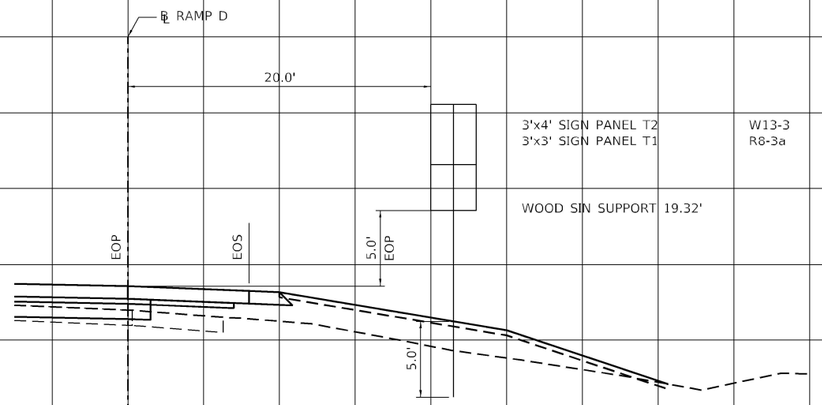

3'x4' SIGN PANEL T2 — W13-3
3'x3' SIGN PANEL T1 — R8-3a

WOOD SIN SUPPORT 19.32'

FINAL SURVEY — NOTE BOOK NO. — SURVEYED — PLOTTED — TEMPLATE — AREAS — AREAS CHECKED — BY — DATE

ORIGINAL SURVEY — NOTE BOOK NO. — SURVEYED — PLOTTED — TEMPLATE — AREAS — AREAS CHECKED — BY — DATE

MODEL: Default
FILE NAME: ...\D978604-sht-Signing Xsec.dgn

* (41-6,41-6-1,41-7)RS-2;BSMART 2023

Kaskaskia Engineering Group, LLC
PROFESSIONAL ENGINEERING LICENSE NO. 184.001773
Illinois Professional Design Firm
Professional Engineering Group

USER NAME = rjo	DESIGNED -	REVISED -	
	DRAWN -	REVISED -	
PLOT SCALE = 10.0000 ' / in.	CHECKED -	REVISED -	
PLOT DATE = 10/20/2022 - 4:09:52 PM	DATE -	REVISED -	

STATE OF ILLINOIS
DEPARTMENT OF TRANSPORTATION

INTERSTATE 64
SIGNING CROSS SECTIONS

SCALE: 1"=50' | SHEET 2 OF 5 SHEETS | STA. | TO STA.

F.A.I. RTE.	SECTION	COUNTY	TOTAL SHEETS	SHEET NO.
64	*	JEFFERSON	1052	336

CONTRACT NO. 78604

ILLINOIS | FED. AID PROJECT

5+40, RT
RAMP B

℄ RAMP B

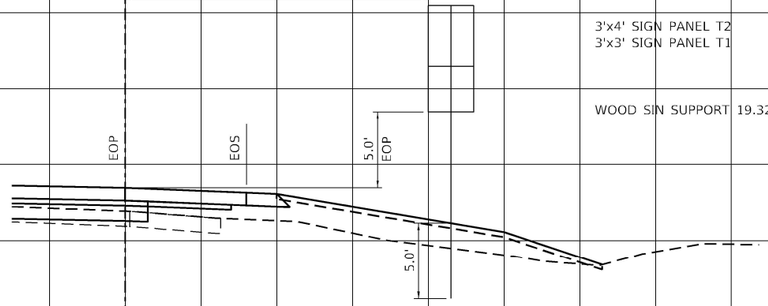

3'x4' SIGN PANEL T2 — W13-3
3'x3' SIGN PANEL T1 — R8-3a

WOOD SIN SUPPORT 19.32'

2178+00, RT
I-64 MEDIAN

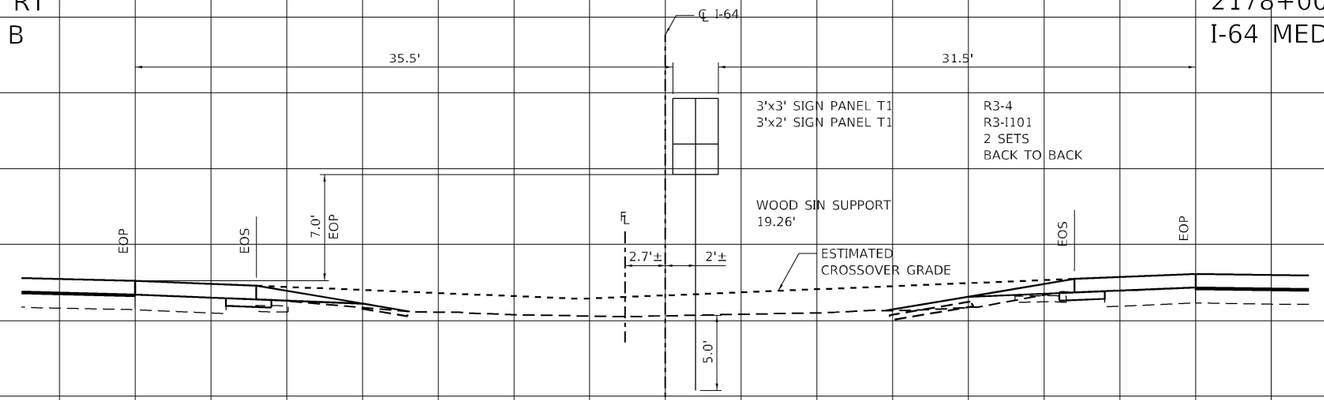

3'x3' SIGN PANEL T1 — R3-4
3'x2' SIGN PANEL T1 — R3-I101
2 SETS
BACK TO BACK

WOOD SIN SUPPORT
19.26'

13+00, RT
RAMP C

℄ RAMP C

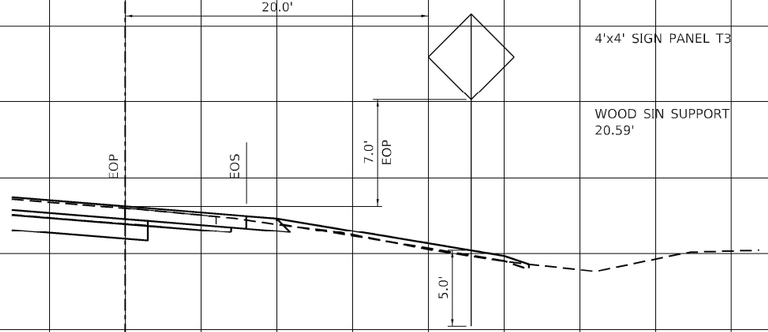

4'x4' SIGN PANEL T3 — W4-1

WOOD SIN SUPPORT
20.59'

2170+00, RT
I-64 EB

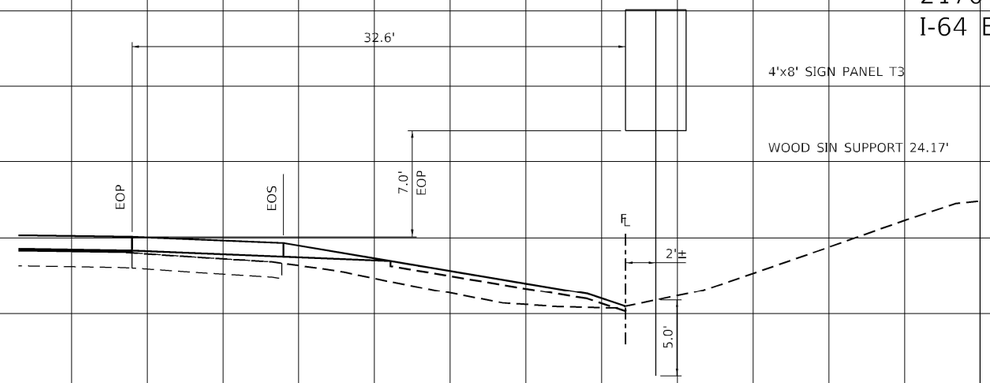

4'x8' SIGN PANEL T3 — R2-4a

WOOD SIN SUPPORT 24.17'

2149+00, LT
I-64 WB

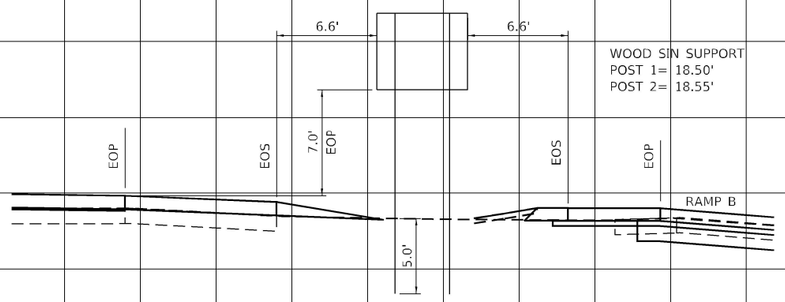

6'x5' SIGN PANEL T3 — E5-1a

WOOD SIN SUPPORT
POST 1= 18.50'
POST 2= 18.55'

2165+00, LT
I-64 EB

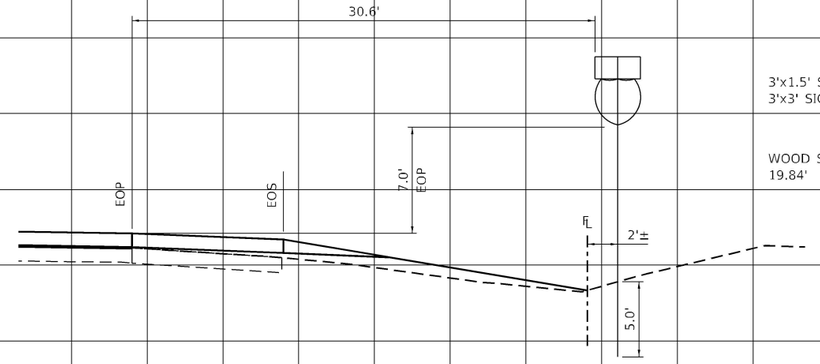

3'x1.5' SIGN PANEL T1 — M3-4
3'x3' SIGN PANEL T1 — M1-1

WOOD SIN SUPPORT
19.84'

* (41-6,41-6-1,41-7)RS-2;BSMART 2023

FINAL SURVEY — NOTE BOOK — NO. — SURVEYED — PLOTTED — TEMPLATE — AREAS — AREAS CHECKED — BY — DATE

ORIGINAL SURVEY — NOTE BOOK — NO. — SURVEYED — PLOTTED — TEMPLATE — AREAS — AREAS CHECKED — BY — DATE

MODEL: Default
FILE NAME: ...\D97860 4\sht-Signing Xsec.dgn

Kaskaskia Engineering Group, LLC
PROFESSIONAL DESIGN FIRM
Illinois Professional Design Firm
Professional Engineering Group
200 E. Main St., Suite 100
Belleville, Illinois 62220
618.233.5900 Phone
618.233.5977 fax
www.kaskaskiaeng.com
184.006705
Illinois Professional Design Firm
Professional Engineering Group
184.006705
216.000846

USER NAME = rjo	DESIGNED -	REVISED -
	DRAWN -	REVISED -
PLOT SCALE = 10.0000 ' / in.	CHECKED -	REVISED -
PLOT DATE = 10/20/2022 - 4:09:53 PM	DATE -	REVISED -

STATE OF ILLINOIS
DEPARTMENT OF TRANSPORTATION

INTERSTATE 64
SIGNING CROSS SECTIONS

SCALE: 1"=50' | SHEET 3 OF 5 SHEETS | STA. | TO STA.

F.A.I. RTE.	SECTION	COUNTY	TOTAL SHEETS	SHEET NO.
64	*	JEFFERSON	1052	337
		CONTRACT NO. 78604		
	ILLINOIS	FED. AID PROJECT		

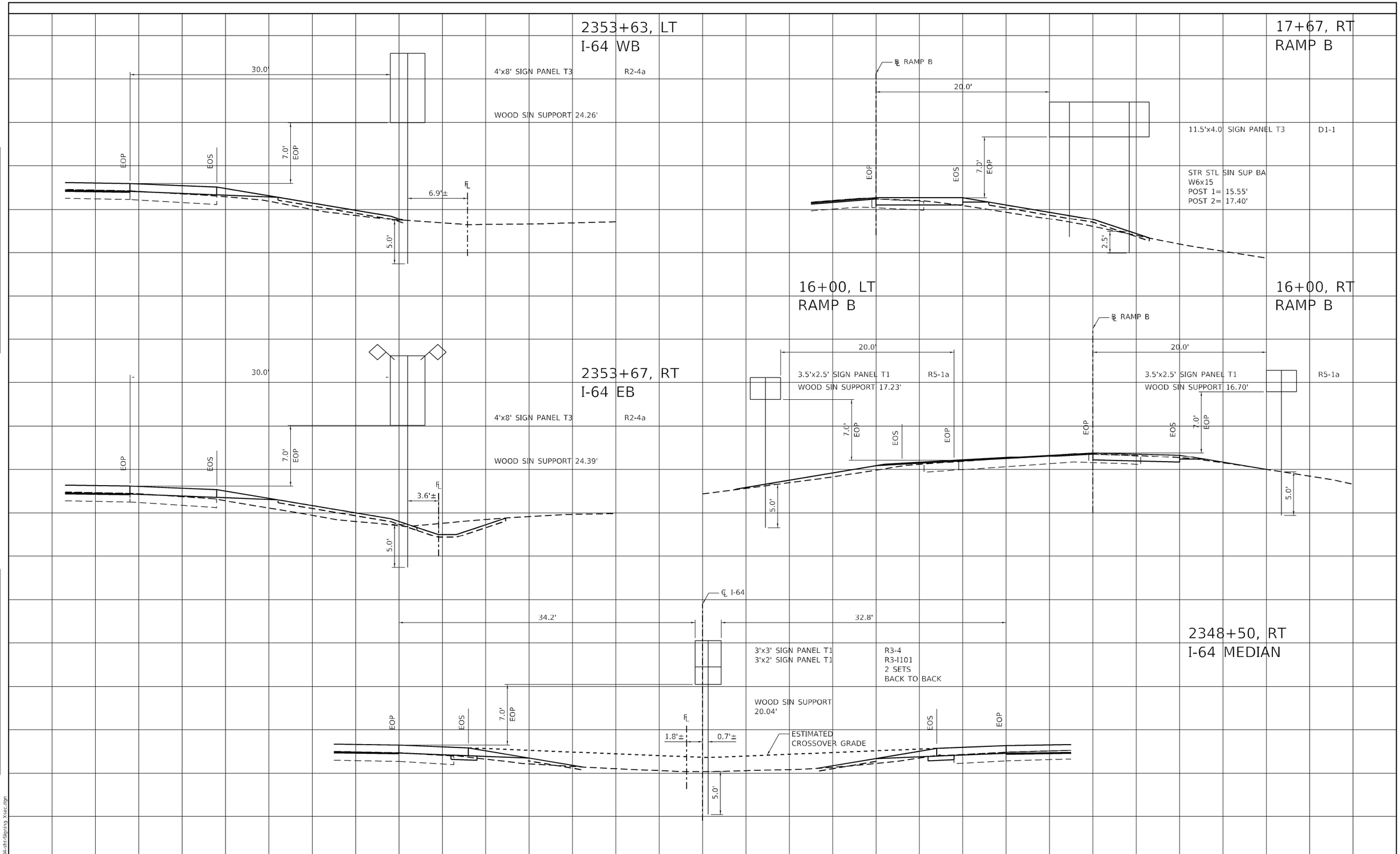

FINAL SURVEY | NOTE BOOK | NO. | SURVEYED | PLOTTED | TEMPLATE | AREAS | AREAS CHECKED | BY | DATE

ORIGINAL SURVEY | NOTE BOOK | NO. | SURVEYED | PLOTTED | TEMPLATE | AREAS | AREAS CHECKED | BY | DATE

MODEL: Default
FILE NAME: ...\D978604-sht-Signing Xsec.dgn

* (41-6,41-6-1,41-7)RS-2;BSMART 2023

Kaskaskia Engineering Group, LLC
200 E. Main St., Suite 100
Belleville, Illinois 62220
618.233.5677 phone
618.233.5677 fax
www.kaskaskiaeng.com
PROFESSIONAL REGISTRATIONS
Illinois Professional Design Firm
Professional Engineering Group
LICENSE NO.
184.004773
20-5000565

USER NAME = rjo	DESIGNED -	REVISED -	
	DRAWN -	REVISED -	
PLOT SCALE = 10.0000 ' / in.	CHECKED -	REVISED -	
PLOT DATE = 10/20/2022 - 4:09:53 PM	DATE -	REVISED -	

STATE OF ILLINOIS
DEPARTMENT OF TRANSPORTATION

INTERSTATE 64
SIGNING CROSS SECTIONS

SCALE: 1"=50' | SHEET 4 OF 5 SHEETS | STA. | TO STA.

F.A.I. RTE.	SECTION	COUNTY	TOTAL SHEETS	SHEET NO.
64	*	JEFFERSON	1052	338
		CONTRACT NO. 78604		
		ILLINOIS	FED. AID PROJECT	

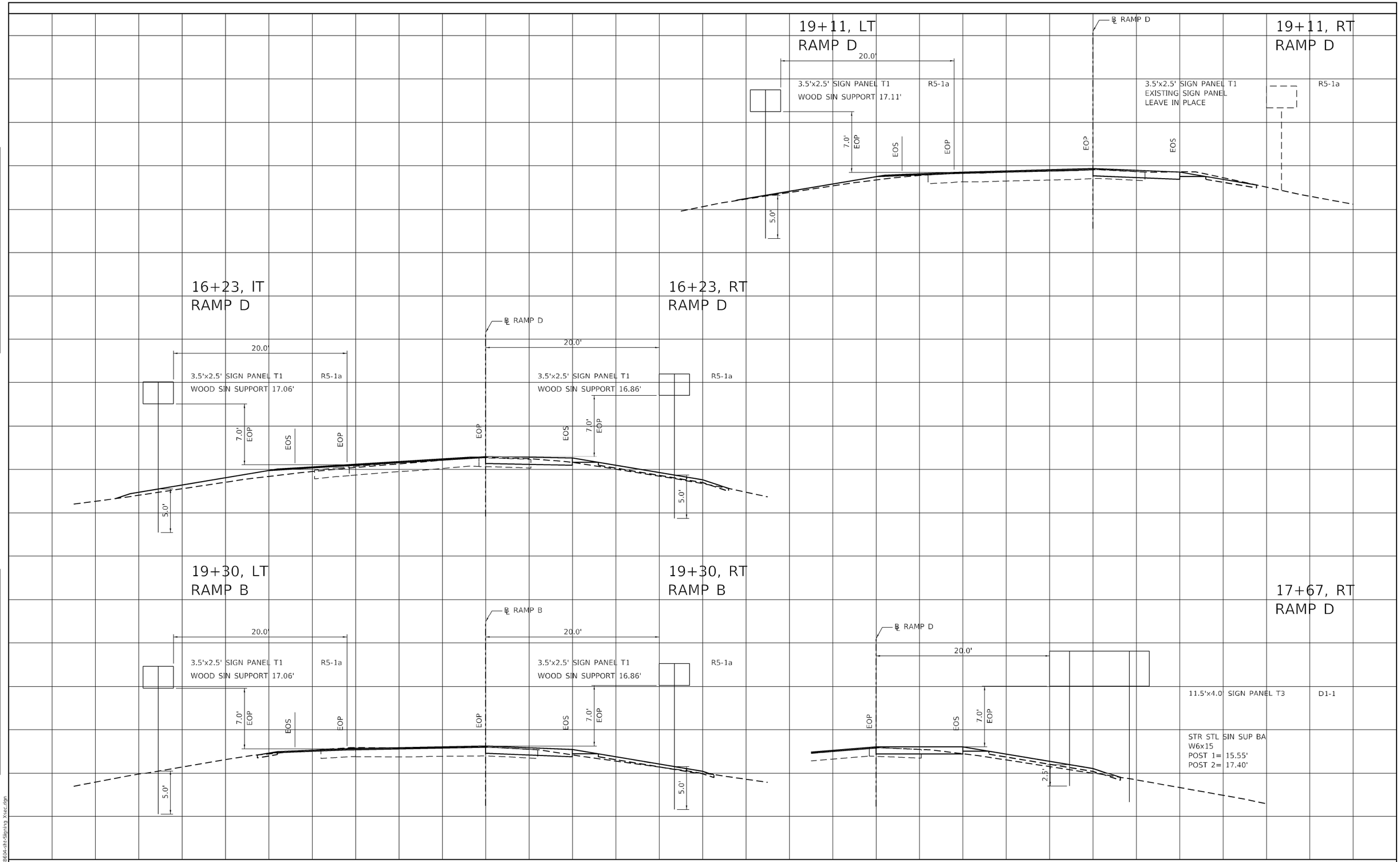

FINAL SURVEY | NOTE BOOK | NO. | SURVEYED | PLOTTED | TEMPLATE | AREAS | AREAS CHECKED | BY | DATE

ORIGINAL SURVEY | NOTE BOOK | NO. | SURVEYED | PLOTTED | TEMPLATE | AREAS | AREAS CHECKED | BY | DATE

MODEL: Default
FILE NAME: ...\D978604-sht-Signing Xsec.dgn

* (41-6,41-6-1,41-7)RS-2;BSMART 2023

Kaskaskia Engineering Group, LLC
PROFESSIONAL REGISTRATIONS
Illinois Professional Design Firm
Professional Engineering Group
LICENSE NO. 184.001773
20-5000165

USER NAME = rjo	DESIGNED -	REVISED -	
	DRAWN -	REVISED -	
PLOT SCALE = 10.0000 ' / in.	CHECKED -	REVISED -	
PLOT DATE = 10/20/2022 - 4:09:54 PM	DATE -	REVISED -	

STATE OF ILLINOIS
DEPARTMENT OF TRANSPORTATION

INTERSTATE 64
SIGNING CROSS SECTIONS

1"=50' | SHEET 5 OF 5 SHEETS | STA. | TO STA.

F.A.I. RTE.	SECTION	COUNTY	TOTAL SHEETS	SHEET NO.
64	*	JEFFERSON	1052	339
		CONTRACT NO. 78604		
		ILLINOIS	FED. AID PROJECT	

SIGN DETAIL

1:50



Panel Style: _Next Exits.ssi
M.U.T.C.D.: 2009 Edition

Panel Style: _Next Exits.ssi

Dimensions are in inches.tenths

Letter locations are panel edge to lower left corner

SIGN NUMBER	name	
WIDTH x HGHT.	13'-0" x 8'-6"	
BORDER WIDTH	2"	
CORNER RADIUS	9"	
MOUNTING	Ground	
BACKGROUND	TYPE:	Reflective
	COLOR:	Green
LEGEND/BORDER	TYPE:	Reflective
	COLOR:	White/White

SYMBOL	ROT	X	Y	WID	HT

LETTER POSITIONS (X)

																					LENGTH	SERIES/SIZE
E	X	I	T	6	9																	E 2000
62.4	73.1	86	90.2	111.2	125.9																75.6	12,15
W	o	o	d	l	a	w	n															EM 2000
18	37.4	51.8	66.2	83.1	91.3	106.5	127.4														120	16/12
1	M	I	L	E																		E 2000
49.9	66.4	80.8	86.1	97.1																	56.2	15,12

* (41-6,41-6-1,41-7)RS-2;BSMART 2023

MODEL: Default
FILE NAME: ...\D978604-sht-Signing Sheets.dgn

Kaskaskia Engineering Group, LLC
PROFESSIONAL REGISTRATIONS
Illinois Professional Design Firm
Professional Engineering Group
LICENSE NO.
184.005773
20-5880185

USER NAME = rjo	DESIGNED -	REVISED -	
	DRAWN -	REVISED -	
PLOT SCALE = 100.0000 ' / in.	CHECKED -	REVISED -	
PLOT DATE = 10/20/2022 - 4:18:02 PM	DATE -	REVISED -	

STATE OF ILLINOIS
DEPARTMENT OF TRANSPORTATION

INTERSTATE 64
SIGNING PLAN

SCALE: 1"=50' | SHEET 1 OF 17 SHEETS | STA. TO STA.

F.A.I. RTE.	SECTION	COUNTY	TOTAL SHEETS	SHEET NO.
64	*	JEFFERSON	1052	340
		CONTRACT NO. 78604		
		ILLINOIS	FED. AID PROJECT	

SIGN DETAIL

1:50



Panel Style: _Next Exits.ssi
M.U.T.C.D.: 2009 Edition

Panel Style: _Next Exits.ssi

Dimensions are in inches.tenths

Letter locations are panel edge to lower left corner

SIGN NUMBER	name
WIDTH x HGHT.	17'-6" x 7'-6"
BORDER WIDTH	2"
CORNER RADIUS	12"
MOUNTING	Ground
BACKGROUND	TYPE: Reflective
	COLOR: Green
LEGEND/BORDER	TYPE: Reflective
	COLOR: White/White

SYMBOL	ROT	X	Y	WID	HT

LETTER POSITIONS (X)

																					LENGTH	SERIES/SIZE
U	S		5	0																		EM 2000
11	23.7	33.4	45.4	57.7																	56.8	12
7																						EM 2000
188.2																					10.8	13.3
E	a	s	t		S	t		L	o	u	i	s										EM 2000
11	23.2	35.9	47.5	54.4	67.7	81.2	88.1	101.4	113	126.2	140.3	146.8									144.6	13.3/10
6	6																					EM 2000
174.6	188.2																				24.4	13.4
S	t		L	o	u	i	s															EM 2000
11	24.6	31.5	44.8	56.4	69.5	83.6	90.1														87.9	13.3/10
6	9																					EM 2000
174.8	188.2																				24.2	13.3

* (41-6,41-6-1,41-7)RS-2;BSMART 2023

MODEL: Default
FILE NAME: ...\D978604-sht-Signing Sheets.dgn

Kaskaskia Engineering Group, LLC
PROFESSIONAL ENGINEERING LICENSE NO.
Illinois Professional Design Firm
Professional Engineering Group

USER NAME = rjo	DESIGNED -	REVISED -	STATE OF ILLINOIS DEPARTMENT OF TRANSPORTATION
	DRAWN -	REVISED -	
PLOT SCALE = 100.0000 ' / in.	CHECKED -	REVISED -	
PLOT DATE = 10/20/2022 - 4:18:02 PM	DATE -	REVISED -	

INTERSTATE 64
SIGNING PLAN

SCALE: 1"=50' | SHEET 2 OF 17 SHEETS | STA. TO STA.

F.A.I. RTE.	SECTION	COUNTY	TOTAL SHEETS	SHEET NO.
64	*	JEFFERSON	1052	341
		CONTRACT NO. 78604		
		ILLINOIS FED. AID PROJECT		

SIGN DETAIL

1:50

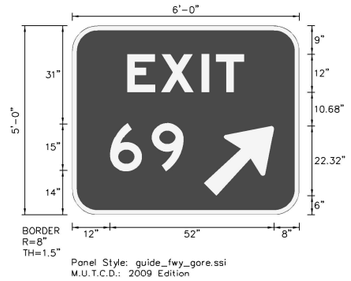

Panel Style: guide_fwy_gore.ssi
M.U.T.C.D.: 2009 Edition

SIGN NUMBER	2 Digit Gore – Right
WIDTH x HGHT.	6'–0" x 5'–0"
BORDER WIDTH	1.5"
CORNER RADIUS	8"
MOUNTING	Ground
BACKGROUND	TYPE: Reflective
	COLOR: Green
LEGEND/BORDER	TYPE: Reflective
	COLOR: White/White

SYMBOL	ROT	X	Y	WID	HT
AR_Type A	315	41.7	6	18	28.4

Panel Style: guide_fwy_gore.ssi
Dimensions are in inches.tenths

Letter locations are panel edge to lower left corner

LETTER POSITIONS (X)

E	X	I	T																	LENGTH	SERIES/SIZE
17.5	28.1	41	45.6																	37	12
6	9																				D 2000
12	25.2																			23.4	15

MODEL: Default
FILE NAME: ...\D9786044-Int-Signing Sheets.dgn

Kaskaskia Engineering Group, LLC
300 E. Main St., Suite 300, Barrington, Illinois 60010
630.433.5977 phone
630.233.5977 fax
www.kaskaskiaeng.com
PROFESSIONAL REGISTRATIONS
Illinois Professional Design Firm: 184.005773
Professional Engineering Group: 20-5880165

USER NAME = rjo	DESIGNED -	REVISED -
	DRAWN -	REVISED -
PLOT SCALE = 100.0000 ' / in.	CHECKED -	REVISED -
PLOT DATE = 10/20/2022 - 4:18:03 PM	DATE -	REVISED -

STATE OF ILLINOIS
DEPARTMENT OF TRANSPORTATION

INTERSTATE 64
SIGNING PLAN

SCALE: 1"=50' | SHEET 3 OF 17 SHEETS | STA. | TO STA.

F.A.I. RTE.	SECTION	COUNTY	TOTAL SHEETS	SHEET NO.
64	*	JEFFERSON	1052	342
		CONTRACT NO. 78604		
		ILLINOIS FED. AID PROJECT		

* (41-6,41-6-1,41-7)RS-2;BSMART 2023

SIGN DETAIL

1:100



Panel Style: _Next Exit.ssi
M.U.T.C.D.: 2009 Edition

SIGN NUMBER	name
WIDTH x HGHT.	14'-0" x 14'-6"
BORDER WIDTH	2"
CORNER RADIUS	12"
MOUNTING	Ground
BACKGROUND	TYPE: Reflective
	COLOR: Green
LEGEND/BORDER	TYPE: Reflective
	COLOR: White/White

SYMBOL	ROT	X	Y	WID	HT
M1_1	0	66	96.5	36	36

Panel Style: _Next Exit.ssi
Dimensions are in inches.tenths

Letter locations are panel edge to lower left corner

LETTER POSITIONS (X)

																					LENGTH	SERIES/SIZE
E	X	I	T	7	3																	E 2000
83.6	92.5	103.2	106.7	126.2	140.9																69.4	10,15
C	h	i	c	a	g	o																EM 2000
34.7	52.2	69.1	77.3	91.4	106.9	122.4															98.6	16/12
M	e	m	p	h	i	s																EM 2000
29.4	48.3	63.8	87.8	103.3	120.3	128.1															109.3	16/12
1	M	I	L	E	S																	E 2000
50.6	67.1	79.1	83.5	92.7	101.6																59.1	15,10

MODEL: Default
FILE NAME: ...\D978604-sht-Signing Sheets.dgn

Kaskaskia Engineering Group, LLC
PROFESSIONAL REGISTRATIONS
Illinois Professional Design Firm
Professional Engineering Group
LICENSE NO.
184.005773
20-5880185

USER NAME = rjo	DESIGNED -	REVISED -	
	DRAWN -	REVISED -	
PLOT SCALE = 100.0000 ' / in.	CHECKED -	REVISED -	
PLOT DATE = 10/20/2022 - 4:18:04 PM	DATE -	REVISED -	

STATE OF ILLINOIS
DEPARTMENT OF TRANSPORTATION

INTERSTATE 64
SIGNING PLAN

SCALE: 1"=50' | SHEET 4 OF 17 SHEETS | STA. TO STA.

F.A.I. RTE.	SECTION	COUNTY	TOTAL SHEETS	SHEET NO.
64	*	JEFFERSON	1052	343
		CONTRACT NO. 78604		
		ILLINOIS	FED. AID PROJECT	

* (41-6,41-6-1,41-7)RS-2;BSMART 2023

SIGN DETAIL

1:50

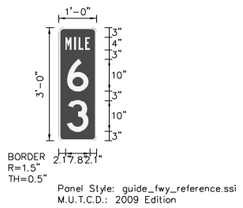

SIGN NUMBER	Reference Location 10–99
WIDTH x HGHT.	1'–0" x 3'–0"
BORDER WIDTH	0.5"
CORNER RADIUS	1.5"
MOUNTING	Ground
BACKGROUND	TYPE: Reflective
	COLOR: Green
LEGEND/BORDER	TYPE: Reflective
	COLOR: White/White

SYMBOL	ROT	X	Y	WID	HT

Panel Style: guide_fwy_reference.ssi

Dimensions are in inches.tenths

Letter locations are panel edge to lower left corner

LETTER POSITIONS (X)

M	I	L	E																	LENGTH	SERIES/SIZE
2.1	4.9	6.3	8.4																	7.8	B 2000 4
6 2.6																				6.8	D 2000 10
3 2.6																				6.8	D 2000 10

MODEL: Default
FILE NAME: ...\D978604-sht-Signing Sheets.dgn

Kaskaskia Engineering Group, LLC
200 E. Main St., Suite 100
Belleville, Illinois 62220
618.433.5077 phone
618.433.5077 fax
www.kaskaskiaeng.com
PROFESSIONAL REGISTRATIONS
Illinois Professional Design Firm
Professional Engineering Group
LICENSE NO.
184.005773
20-5880185

USER NAME = rjo	DESIGNED -	REVISED -
	DRAWN -	REVISED -
PLOT SCALE = 100.0000 ' / in.	CHECKED -	REVISED -
PLOT DATE = 10/20/2022 - 4:18:04 PM	DATE -	REVISED -

STATE OF ILLINOIS
DEPARTMENT OF TRANSPORTATION

INTERSTATE 64
SIGNING PLAN

SCALE: 1"=50' | SHEET 5 OF 17 SHEETS | STA. TO STA.

F.A.I. RTE.	SECTION	COUNTY	TOTAL SHEETS	SHEET NO.
64	*	JEFFERSON	1052	344

CONTRACT NO. 78604

ILLINOIS | FED. AID PROJECT

* (41-6,41-6-1,41-7)RS-2;BSMART 2023

SIGN DETAIL

1:50

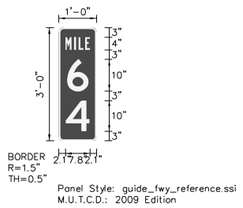

SIGN NUMBER	Reference Location 10–99
WIDTH x HGHT.	1'–0" x 3'–0"
BORDER WIDTH	0.5"
CORNER RADIUS	1.5"
MOUNTING	Ground
BACKGROUND	TYPE: Reflective
	COLOR: Green
LEGEND/BORDER	TYPE: Reflective
	COLOR: White/White

SYMBOL	ROT	X	Y	WID	HT

Panel Style: guide_fwy_reference.ssi

Dimensions are in inches.tenths

Letter locations are panel edge to lower left corner

LETTER POSITIONS (X)

M	I	L	E																	LENGTH	SERIES/SIZE
																					B 2000
2.1	4.9	6.3	8.4																	7.8	4
6																					D 2000
2.6																				6.8	10
4																					D 2000
2.3																				7.5	10

* (41-6,41-6-1,41-7)RS-2;BSMART 2023

MODEL: Default
FILE NAME: ...\D978604-sht-Signing Sheets.dgn

Kaskaskia Engineering Group, LLC
200 E. Main St., Suite 100
Belleville, Illinois 62220
618.433.5077 phone
618.433.5077 fax
www.kaskaskiaeng.com
PROFESSIONAL REGISTRATIONS
Illinois Professional Design Firm
Professional Engineering Group
LICENSE NO.
184.005773
20-5000185

USER NAME = rjo	DESIGNED -	REVISED -	
	DRAWN -	REVISED -	
PLOT SCALE = 100.0000 ' / in.	CHECKED -	REVISED -	
PLOT DATE = 10/20/2022 - 4:18:05 PM	DATE -	REVISED -	

STATE OF ILLINOIS
DEPARTMENT OF TRANSPORTATION

INTERSTATE 64
SIGNING PLAN

SCALE: 1"=50' | SHEET 6 OF 17 SHEETS | STA. | TO STA.

F.A.I. RTE.	SECTION	COUNTY	TOTAL SHEETS	SHEET NO.
64	*	JEFFERSON	1052	345

CONTRACT NO. 78604

ILLINOIS | FED. AID PROJECT

SIGN DETAIL

1:50

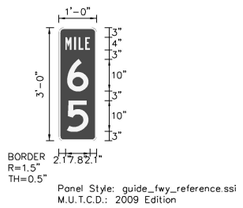

SIGN NUMBER	Reference Location 10–99
WIDTH x HGHT.	1'–0" x 3'–0"
BORDER WIDTH	0.5"
CORNER RADIUS	1.5"
MOUNTING	Ground
BACKGROUND	TYPE: Reflective
	COLOR: Green
LEGEND/BORDER	TYPE: Reflective
	COLOR: White/White

SYMBOL	ROT	X	Y	WID	HT

Panel Style: guide_fwy_reference.ssi

Dimensions are in inches.tenths

Letter locations are panel edge to lower left corner

LETTER POSITIONS (X)

M	I	L	E																	LENGTH	SERIES/SIZE
2.1	4.9	6.3	8.4																	7.8	B 2000 4
6 2.6																				6.8	D 2000 10
5 2.6																				6.8	D 2000 10

* (41-6,41-6-1,41-7)RS-2;BSMART 2023

MODEL: Default
FILE NAME: ...\D978604-sht-Signing Sheets.dgn

Kaskaskia Engineering Group, LLC
PROFESSIONAL REGISTRATIONS
Illinois Professional Design Firm
Professional Engineering Group
LICENSE NO.
184.004773
20-5000185

USER NAME = rjo	DESIGNED -	REVISED -
	DRAWN -	REVISED -
PLOT SCALE = 100.0000 ' / in.	CHECKED -	REVISED -
PLOT DATE = 10/20/2022 - 4:18:05 PM	DATE -	REVISED -

STATE OF ILLINOIS
DEPARTMENT OF TRANSPORTATION

INTERSTATE 64
SIGNING PLAN

SCALE: 1"=50' | SHEET 7 OF 17 SHEETS | STA. TO STA.

F.A.I. RTE.	SECTION	COUNTY	TOTAL SHEETS	SHEET NO.
64	*	JEFFERSON	1052	346

CONTRACT NO. 78604

ILLINOIS | FED. AID PROJECT

SIGN DETAIL

1:50

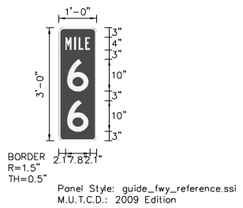

SIGN NUMBER	Reference Location 10–99
WIDTH x HGHT.	1'–0" x 3'–0"
BORDER WIDTH	0.5"
CORNER RADIUS	1.5"
MOUNTING	Ground
BACKGROUND	TYPE: Reflective
	COLOR: Green
LEGEND/BORDER	TYPE: Reflective
	COLOR: White/White

SYMBOL	ROT	X	Y	WID	HT

Panel Style: guide_fwy_reference.ssi

Dimensions are in inches.tenths

Letter locations are panel edge to lower left corner

LETTER POSITIONS (X)

M	I	L	E																	LENGTH	SERIES/SIZE
2.1	4.9	6.3	8.4																	7.8	B 2000 4
6 2.6																				6.8	D 2000 10
6 2.6																				6.8	D 2000 10

* (41-6,41-6-1,41-7)RS-2;BSMART 2023

MODEL: Default
FILE NAME: ...\D978604-sht-Signing Sheets.dgn

Kaskaskia Engineering Group, LLC
PROFESSIONAL REGISTRATIONS
Illinois Professional Design Firm
Professional Engineering Group
LICENSE NO.
184.005773
20-5880185

USER NAME = rjo	DESIGNED -	REVISED -	
	DRAWN -	REVISED -	
PLOT SCALE = 100.0000 ' / in.	CHECKED -	REVISED -	
PLOT DATE = 10/20/2022 - 4:18:06 PM	DATE -	REVISED -	

STATE OF ILLINOIS
DEPARTMENT OF TRANSPORTATION

INTERSTATE 64
SIGNING PLAN

SCALE: 1"=50' | SHEET 8 OF 17 SHEETS | STA. | TO STA.

F.A.I. RTE.	SECTION	COUNTY	TOTAL SHEETS	SHEET NO.
64	*	JEFFERSON	1052	347
		CONTRACT NO. 78604		
		ILLINOIS	FED. AID PROJECT	

SIGN DETAIL

1:50

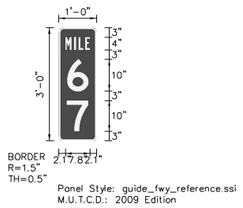

SIGN NUMBER	Reference Location 10–99
WIDTH x HGHT.	1'–0" x 3'–0"
BORDER WIDTH	0.5"
CORNER RADIUS	1.5"
MOUNTING	Ground
BACKGROUND	TYPE: Reflective
	COLOR: Green
LEGEND/BORDER	TYPE: Reflective
	COLOR: White/White

SYMBOL	ROT	X	Y	WID	HT

Panel Style: guide_fwy_reference.ssi

Dimensions are in inches.tenths

Letter locations are panel edge to lower left corner

LETTER POSITIONS (X)

M	I	L	E																	LENGTH	SERIES/SIZE
2.1	4.9	6.3	8.4																	7.8	B 2000 4
6																					D 2000
2.6																				6.8	10
7																					D 2000
2.6																				6.8	10

* (41-6,41-6-1,41-7)RS-2;BSMART 2023

MODEL: Default
FILE NAME: ...\D978604-sht-Signing Sheets.dgn

Kaskaskia Engineering Group, LLC
PROFESSIONAL REGISTRATIONS
Illinois Professional Design Firm
Professional Engineering Group
LICENSE NO.
184.004773
20-5000185

USER NAME = rjo	DESIGNED -	REVISED -
	DRAWN -	REVISED -
PLOT SCALE = 100.0000 ' / in.	CHECKED -	REVISED -
PLOT DATE = 10/20/2022 - 4:18:06 PM	DATE -	REVISED -

STATE OF ILLINOIS
DEPARTMENT OF TRANSPORTATION

INTERSTATE 64
SIGNING PLAN

SCALE: 1"=50' | SHEET 9 OF 17 SHEETS | STA. | TO STA.

F.A.I. RTE.	SECTION	COUNTY	TOTAL SHEETS	SHEET NO.
64	*	JEFFERSON	1052	348

CONTRACT NO. 78604

ILLINOIS | FED. AID PROJECT

SIGN DETAIL

1:50

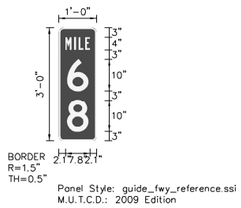

SIGN NUMBER	Reference Location 10–99
WIDTH x HGHT.	1'–0" x 3'–0"
BORDER WIDTH	0.5"
CORNER RADIUS	1.5"
MOUNTING	Ground
BACKGROUND	TYPE: Reflective
	COLOR: Green
LEGEND/BORDER	TYPE: Reflective
	COLOR: White/White

SYMBOL	ROT	X	Y	WID	HT

Panel Style: guide_fwy_reference.ssi

Dimensions are in inches.tenths

Letter locations are panel edge to lower left corner

LETTER POSITIONS (X)

M	I	L	E																	LENGTH	SERIES/SIZE
2.1	4.9	6.3	8.4																	7.8	B 2000 4
6 2.6																				6.8	D 2000 10
8 2.6																				6.8	D 2000 10

MODEL: Default
FILE NAME: ...\D978604-sht-Signing Sheets.dgn

Kaskaskia Engineering Group, LLC
200 E. Main St., Suite 100
Belleville, Illinois 62220
618.433.5077 phone
618.433.5077 fax
www.kaskaskiaeng.com
PROFESSIONAL REGISTRATIONS
Illinois Professional Design Firm
Professional Engineering Group
LICENSE NO.
184.004773
20-5000185

USER NAME = rjo	DESIGNED -	REVISED -
	DRAWN -	REVISED -
PLOT SCALE = 100.0000 ' / in.	CHECKED -	REVISED -
PLOT DATE = 10/20/2022 - 4:18:07 PM	DATE -	REVISED -

STATE OF ILLINOIS
DEPARTMENT OF TRANSPORTATION

INTERSTATE 64
SIGNING PLAN

SCALE: 1"=50' | SHEET 10 OF 17 SHEETS | STA. TO STA.

* (41-6,41-6-1,41-7)RS-2;BSMART 2023

F.A.I. RTE.	SECTION	COUNTY	TOTAL SHEETS	SHEET NO.
64	*	JEFFERSON	1052	349

CONTRACT NO. 78604

ILLINOIS | FED. AID PROJECT

SIGN DETAIL

1:50

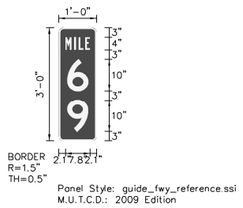

SIGN NUMBER	Reference Location 10–99
WIDTH x HGHT.	1'–0" x 3'–0"
BORDER WIDTH	0.5"
CORNER RADIUS	1.5"
MOUNTING	Ground
BACKGROUND	TYPE: Reflective
	COLOR: Green
LEGEND/BORDER	TYPE: Reflective
	COLOR: White/White

SYMBOL	ROT	X	Y	WID	HT

Panel Style: guide_fwy_reference.ssi

Dimensions are in inches.tenths

Letter locations are panel edge to lower left corner

LETTER POSITIONS (X)

																				LENGTH	SERIES/SIZE
M	I	L	E																		B 2000
2.1	4.9	6.3	8.4																	7.8	4
6																					D 2000
2.6																				6.8	10
9																					D 2000
2.6																				6.8	10

MODEL: Default
FILE NAME: ...\D978604-sht-Signing Sheets.dgn

Kaskaskia Engineering Group, LLC
200 E. Main St., Suite 100
Belleville, Illinois 62220
618.433.5077 phone
618.433.5077 fax
www.kaskaskiaeng.com
PROFESSIONAL REGISTRATIONS
Illinois Professional Design Firm
Professional Engineering Group
LICENSE NO.
184.005773
20-5000185

USER NAME = rjo	DESIGNED -	REVISED -	
	DRAWN -	REVISED -	
PLOT SCALE = 100.0000 ' / in.	CHECKED -	REVISED -	
PLOT DATE = 10/20/2022 - 4:18:07 PM	DATE -	REVISED -	

STATE OF ILLINOIS
DEPARTMENT OF TRANSPORTATION

INTERSTATE 64
SIGNING PLAN

SCALE: 1"=50' | SHEET 11 OF 17 SHEETS | STA. TO STA.

* (41-6,41-6-1,41-7)RS-2;BSMART 2023

F.A.I. RTE.	SECTION	COUNTY	TOTAL SHEETS	SHEET NO.
64	*	JEFFERSON	1052	350
		CONTRACT NO. 78604		
		ILLINOIS	FED. AID PROJECT	

SIGN DETAIL

1:50

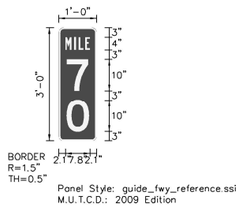

SIGN NUMBER	Reference Location 10–99
WIDTH x HGHT.	1'–0" x 3'–0"
BORDER WIDTH	0.5"
CORNER RADIUS	1.5"
MOUNTING	Ground
BACKGROUND	TYPE: Reflective
	COLOR: Green
LEGEND/BORDER	TYPE: Reflective
	COLOR: White/White

SYMBOL	ROT	X	Y	WID	HT

Panel Style: guide_fwy_reference.ssi

Dimensions are in inches.tenths

Letter locations are panel edge to lower left corner

LETTER POSITIONS (X)

M	I	L	E																	LENGTH	SERIES/SIZE
2.1	4.9	6.3	8.4																	7.8	B 2000 4
7																					D 2000
2.6																				6.8	10
0																					D 2000
2.5																				7.1	10

MODEL: Default
FILE NAME: ...\D978604-sht-Signing Sheets.dgn

Kaskaskia Engineering Group, LLC
PROFESSIONAL REGISTRATIONS
Illinois Professional Design Firm
Professional Engineering Group
LICENSE NO.
184.004773
20-5880185

USER NAME = rjo	DESIGNED -	REVISED -	
	DRAWN -	REVISED -	
PLOT SCALE = 100.0000 ' / in.	CHECKED -	REVISED -	
PLOT DATE = 10/20/2022 - 4:18:08 PM	DATE -	REVISED -	

STATE OF ILLINOIS
DEPARTMENT OF TRANSPORTATION

INTERSTATE 64
SIGNING PLAN

SCALE: 1"=50' | SHEET 12 OF 17 SHEETS | STA. TO STA.

F.A.I. RTE.	SECTION	COUNTY	TOTAL SHEETS	SHEET NO.
64	*	JEFFERSON	1052	351

CONTRACT NO. 78604

ILLINOIS | FED. AID PROJECT

* (41-6,41-6-1,41-7)RS-2;BSMART 2023

SIGN DETAIL

1:50

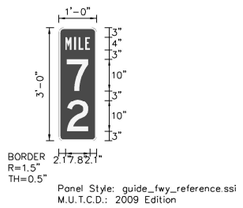

SIGN NUMBER	Reference Location 10–99
WIDTH x HGHT.	1'–0" x 3'–0"
BORDER WIDTH	0.5"
CORNER RADIUS	1.5"
MOUNTING	Ground
BACKGROUND	TYPE: Reflective
	COLOR: Green
LEGEND/BORDER	TYPE: Reflective
	COLOR: White/White

SYMBOL	ROT	X	Y	WID	HT

Panel Style: guide_fwy_reference.ssi

Dimensions are in inches.tenths

Letter locations are panel edge to lower left corner

LETTER POSITIONS (X)

M	I	L	E																	LENGTH	SERIES/SIZE
2.1	4.9	6.3	8.4																	7.8	B 2000 4
7																					D 2000
2.6																				6.8	10
2																					D 2000
2.6																				6.8	10

* (41-6,41-6-1,41-7)RS-2;BSMART 2023

MODEL: Default
FILE NAME: ...\D978604-sht-Signing Sheets.dgn

Kaskaskia Engineering Group, LLC
PROFESSIONAL REGISTRATIONS
Illinois Professional Design Firm
Professional Engineering Group
LICENSE NO.
184.004773
20-5000185

USER NAME = rjo	DESIGNED -	REVISED -
	DRAWN -	REVISED -
PLOT SCALE = 100.0000 ' / in.	CHECKED -	REVISED -
PLOT DATE = 10/20/2022 - 4:18:09 PM	DATE -	REVISED -

STATE OF ILLINOIS
DEPARTMENT OF TRANSPORTATION

INTERSTATE 64
SIGNING PLAN

SCALE: 1"=50' | SHEET 13 OF 17 SHEETS | STA. TO STA.

F.A.I. RTE.	SECTION	COUNTY	TOTAL SHEETS	SHEET NO.
64	*	JEFFERSON	1052	352

CONTRACT NO. 78604

ILLINOIS | FED. AID PROJECT

SIGN DETAIL

1:50

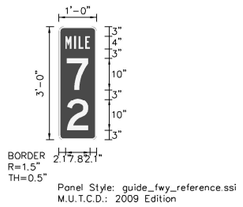

SIGN NUMBER	Reference Location 10–99
WIDTH x HGHT.	1'–0" x 3'–0"
BORDER WIDTH	0.5"
CORNER RADIUS	1.5"
MOUNTING	Ground
BACKGROUND	TYPE: Reflective
	COLOR: Green
LEGEND/BORDER	TYPE: Reflective
	COLOR: White/White

SYMBOL	ROT	X	Y	WID	HT

Panel Style: guide_fwy_reference.ssi

Dimensions are in inches.tenths

Letter locations are panel edge to lower left corner

LETTER POSITIONS (X)

M	I	L	E																	LENGTH	SERIES/SIZE
2.1	4.9	6.3	8.4																	7.8	B 2000 4
7 2.6																				6.8	D 2000 10
2 2.6																				6.8	D 2000 10

MODEL: Default
FILE NAME: ...\D978604-sht-Signing Sheets.dgn

Kaskaskia Engineering Group, LLC
200 E. Main St., Suite 100
Belleville, Illinois 62220
618.433.5077 phone
618.433.5077 fax
www.kaskaskiaeng.com
PROFESSIONAL REGISTRATIONS
Illinois Professional Design Firm
Professional Engineering Group
LICENSE NO.
184.005773
20-5000185

USER NAME = rjo	DESIGNED -	REVISED -
	DRAWN -	REVISED -
PLOT SCALE = 100.0000 ' / in.	CHECKED -	REVISED -
PLOT DATE = 10/20/2022 - 4:18:09 PM	DATE -	REVISED -

STATE OF ILLINOIS
DEPARTMENT OF TRANSPORTATION

INTERSTATE 64
SIGNING PLAN

SCALE: 1"=50' | SHEET 14 OF 17 SHEETS | STA. TO STA.

F.A.I. RTE.	SECTION	COUNTY	TOTAL SHEETS	SHEET NO.
64	*	JEFFERSON	1052	353

CONTRACT NO. 78604

ILLINOIS | FED. AID PROJECT

* (41-6,41-6-1,41-7)RS-2;BSMART 2023

SIGN DETAIL

1:50

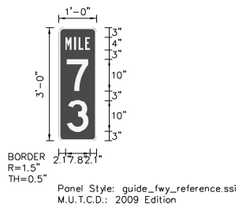

SIGN NUMBER	Reference Location 10–99
WIDTH x HGHT.	1'–0" x 3'–0"
BORDER WIDTH	0.5"
CORNER RADIUS	1.5"
MOUNTING	Ground
BACKGROUND	TYPE: Reflective
	COLOR: Green
LEGEND/BORDER	TYPE: Reflective
	COLOR: White/White

SYMBOL	ROT	X	Y	WID	HT

Panel Style: guide_fwy_reference.ssi

Dimensions are in inches.tenths

Letter locations are panel edge to lower left corner

LETTER POSITIONS (X)

M	I	L	E																	LENGTH	SERIES/SIZE
2.1	4.9	6.3	8.4																	7.8	B 2000 4
7																					D 2000
2.6																				6.8	10
3																					D 2000
2.6																				6.8	10

MODEL: Default
FILE NAME: ...\D978604-sht-Signing Sheets.dgn

Kaskaskia Engineering Group, LLC
200 E. Main St., Suite 100
Belleville, Illinois 62220
618.433.5077 phone
618.433.5077 fax
www.kaskaskiaeng.com
PROFESSIONAL REGISTRATIONS
Illinois Professional Design Firm
Professional Engineering Group
LICENSE NO.
184.004773
20-5000185

USER NAME = rjo	DESIGNED -	REVISED -	
	DRAWN -	REVISED -	
PLOT SCALE = 100.0000 ' / in.	CHECKED -	REVISED -	
PLOT DATE = 10/20/2022 - 4:18:10 PM	DATE -	REVISED -	

STATE OF ILLINOIS
DEPARTMENT OF TRANSPORTATION

INTERSTATE 64
SIGNING PLAN

SCALE: 1"=50' | SHEET 15 OF 17 SHEETS | STA. TO STA.

F.A.I. RTE.	SECTION	COUNTY	TOTAL SHEETS	SHEET NO.
64	*	JEFFERSON	1052	354
		CONTRACT NO. 78604		
		ILLINOIS	FED. AID PROJECT	

* (41-6,41-6-1,41-7)RS-2;BSMART 2023

SIGN DETAIL

1:50

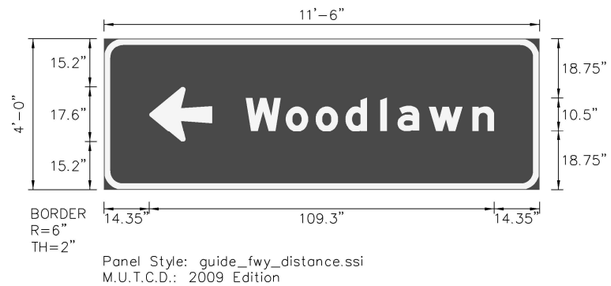

SIGN NUMBER	name
WIDTH x HGHT.	11'-6" x 4'-0"
BORDER WIDTH	2"
CORNER RADIUS	6"
MOUNTING	Overhead
BACKGROUND	TYPE: Reflective
	COLOR: Green
LEGEND/BORDER	TYPE: Reflective
	COLOR: White/White

SYMBOL	ROT	X	Y	WID	HT
AR_Type B	90	14.4	15.2	17.6	20

Panel Style: guide_fwy_distance.ssi

Dimensions are in inches.tenths

Letter locations are panel edge to lower left corner

LETTER POSITIONS (X)

W	o	o	d	l	a	w	n	LENGTH	SERIES/SIZE
									EM 2000
44.9	57.6	67	76.5	87.6	93	102.9	116.7	78.8	10.5/7.9

MODEL: Default
FILE NAME: ...\D978604-sht-Signing Sheets.dgn

Kaskaskia Engineering Group, LLC
PROFESSIONAL REGISTRATIONS
Illinois Professional Design Firm
Professional Engineering Group
LICENSE NO.
184.004773
20-5880186

USER NAME = rjo	DESIGNED -	REVISED -	
	DRAWN -	REVISED -	
PLOT SCALE = 100.0000 ' / in.	CHECKED -	REVISED -	
PLOT DATE = 10/20/2022 - 4:18:10 PM	DATE -	REVISED -	

STATE OF ILLINOIS
DEPARTMENT OF TRANSPORTATION

INTERSTATE 64
SIGNING PLAN – RAMP B

SCALE: 1"=50' | SHEET 16 OF 17 SHEETS | STA. TO STA.

* (41-6,41-6-1,41-7)RS-2;BSMART 2023

F.A.I. RTE.	SECTION	COUNTY	TOTAL SHEETS	SHEET NO.
64	*	JEFFERSON	1052	355
		CONTRACT NO. 78604		
		ILLINOIS	FED. AID PROJECT	

SIGN DETAIL

1:50

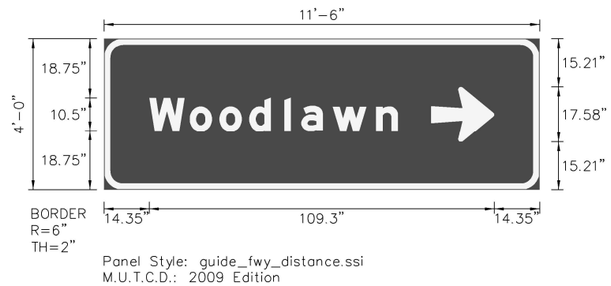

SIGN NUMBER	name
WIDTH x HGHT.	11'-6" x 4'-0"
BORDER WIDTH	2"
CORNER RADIUS	6"
MOUNTING	Ground
BACKGROUND	TYPE: Reflective
	COLOR: Green
LEGEND/BORDER	TYPE: Reflective
	COLOR: White/White

SYMBOL	ROT	X	Y	WID	HT
AR_Type B	270	103.6	15.2	17.6	20

Panel Style: guide_fwy_distance.ssi

Dimensions are in inches.tenths

Letter locations are panel edge to lower left corner

LETTER POSITIONS (X)

W	o	o	d	l	a	w	n	LENGTH	SERIES/SIZE
									EM 2000
14.4	27.1	36.5	46	57.1	62.5	72.4	86.2	78.8	10.5/7.9

* (41-6,41-6-1,41-7)RS-2;BSMART 2023

MODEL: Default
FILE NAME: ...\D978604-sht-Signing Sheets.dgn

Kaskaskia Engineering Group, LLC
PROFESSIONAL REGISTRATIONS
Illinois Professional Design Firm
Professional Engineering Group
LICENSE NO.
184.005773
20-5880185

USER NAME = rjo	DESIGNED -	REVISED -	
	DRAWN -	REVISED -	
PLOT SCALE = 100.0000 ' / in.	CHECKED -	REVISED -	
PLOT DATE = 10/20/2022 - 4:18:11 PM	DATE -	REVISED -	

STATE OF ILLINOIS
DEPARTMENT OF TRANSPORTATION

INTERSTATE 64
SIGNING PLAN – RAMP D

SCALE: 1"=50' | SHEET 17 OF 17 SHEETS | STA. TO STA.

F.A.I. RTE.	SECTION	COUNTY	TOTAL SHEETS	SHEET NO.
64	*	JEFFERSON	1052	356

CONTRACT NO. 78604

ILLINOIS | FED. AID PROJECT

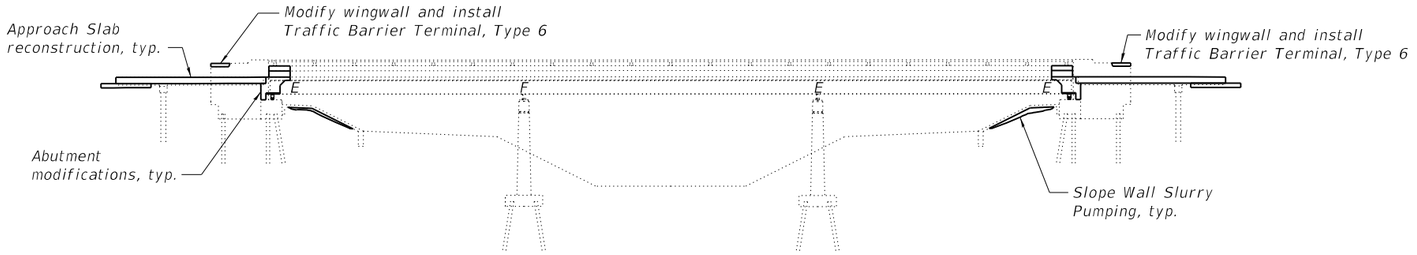

SCOPE OF WORK

1. Scarify deck 2½".
2. Perform deck repairs as shown. Plug every other floor drains as shown.
3. Replace bearings at abutments.
4. Remove and replace bridge approach slabs and pavement connectors including removal of buried pile bent caps.
5. Modify parapets to accommodate Traffic Barrier Terminals, Type 6.
6. Convert existing stub abutments to semi-integral abutments.
7. Install new latex concrete overlay on bridge deck and perform diamond grinding, longitudinal bridge deck grooving and apply protective coat. Up to ¼" may be ground off the bridge deck latex concrete overlay and the bridge approach slabs.
8. Perform structural repair of concrete on pier caps and on parapet of SN 041-0075 in NW quadrant.
9. Perform Slope Wall Slurry Pumping.

ELEVATION

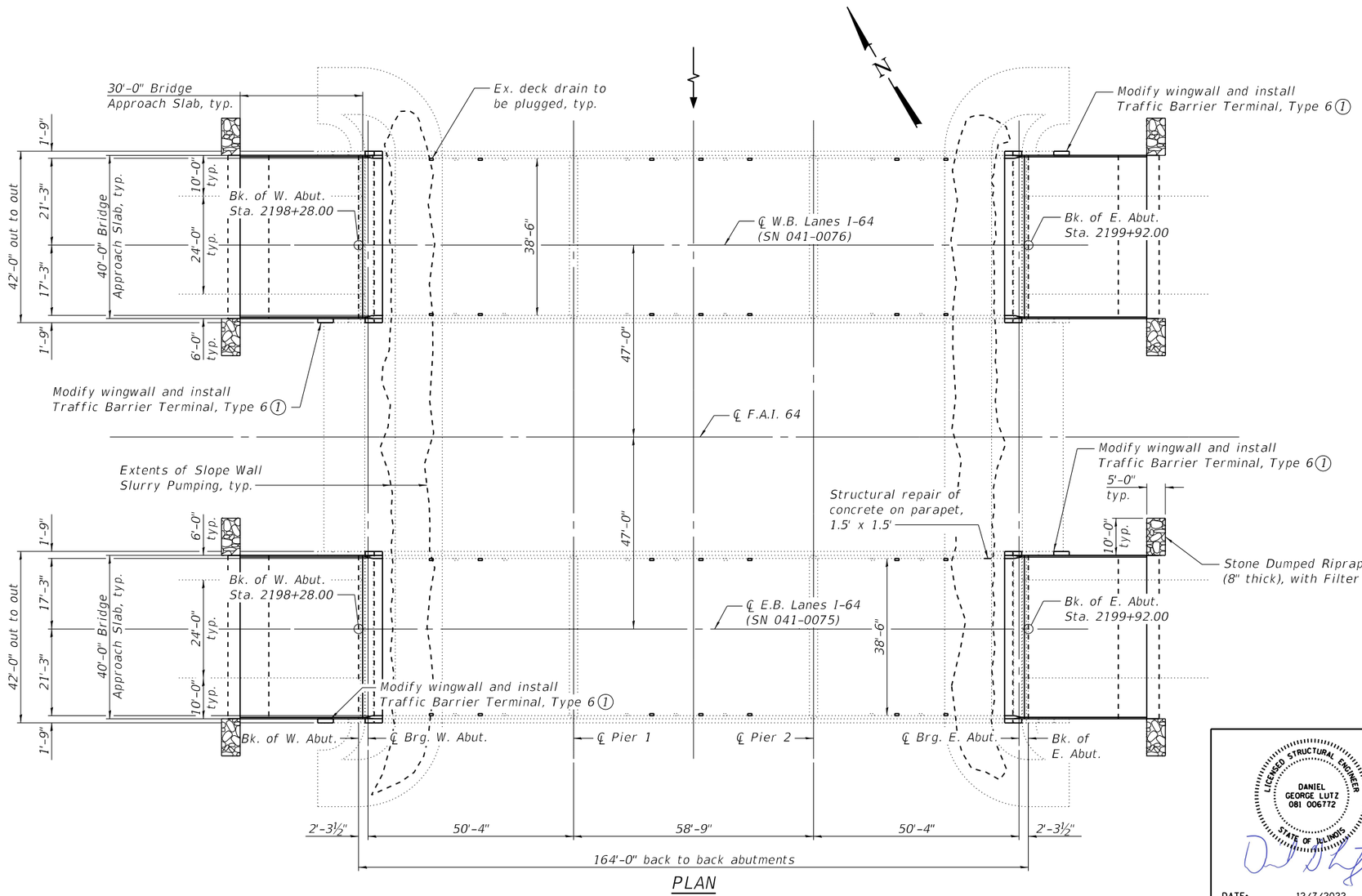

PLAN

DESIGN STRESSES

FIELD UNITS

New Construction
f'c = 4,000 psi (Superstructure)
fy = 60,000 psi (Reinforcement)
fy = 36,000 psi (M270 Grade 36)

INDEX OF SHEETS

Sheet No.	Description
1	General Plan & Elevation
2	General Data
3	Deck Patching Plan
4	Removal Details
5	Diaphragm Plan & Elevation
6-7	Diaphragm Details
8-9	Bridge Approach Slab Details
10	Abutment Details
11	Bearing Details
12	Substructure Repairs
13-24	Existing Plans

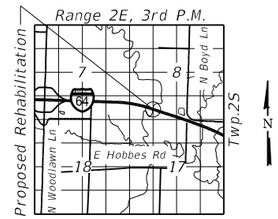

LOCATION SKETCH

Notes
(1) For details of wingwall modification, see Sheet 10 of 24.

DANIEL GEORGE LUTZ
081 006772
LICENSED STRUCTURAL ENGINEER
STATE OF ILLINOIS

DATE: 12/7/2022

EXPIRATION: 11/30/2024

GENERAL PLAN & ELEVATION
I-64 OVER BIG MUDDY RIVER
F.A.I. RTE. 64
SEC (41-6,41-6-1,41-7)RS-2,BSMART 2023
JEFFERSON COUNTY
STATION 2199+10.00
STRUCTURE NO. 041-0075 (E.B.)
STRUCTURE NO. 041-0076 (W.B.)

FILE NAME: \\Oates-fs02\data\P\220060 - I-64\Microstation\041-0075_007610410075_0076-001-General Plan & Elevation.dgn

OATES ASSOCIATES
www.oatesassociates.com
ILLINOIS DESIGN FIRM LICENSE NO.: 184.001115

USER NAME = ----------	DESIGNED - ETH	REVISED - ----------	
	CHECKED - KBC	REVISED - ----------	
PLOT SCALE = ----------	DRAWN - NBB	REVISED - ----------	
PLOT DATE = 12/7/2022	CHECKED - KBC	REVISED - ----------	

STATE OF ILLINOIS
DEPARTMENT OF TRANSPORTATION

GENERAL PLAN & ELEVATION
SN 041-0075 (E.B.) & 041-0076 (W.B.)
SHEET 1 OF 24 SHEETS

F.A.I. RTE.	SECTION	COUNTY	TOTAL SHEETS	SHEET NO.
64	(41-6,41-6-1,41-7)RS-2,BSMART 2023	JEFFERSON	1052	357
		CONTRACT NO. 78604		
		ILLINOIS	FED. AID PROJECT	

GENERAL NOTES

Reinforcement bars designated (E) shall be epoxy coated.

Prior to pouring the new concrete deck and diaphragm, all heavy or loose rust, loose mill scale, and other loose or potentially detrimental foreign material shall be removed from the surface in contact with concrete. Tightly adhered paint may remain unless otherwise noted. Removal shall be accomplished by methods that will not damage the steel and the cost will be included in the pay item covering removal of the existing concrete.

As directed by the Engineer, existing construction accessories welded to the top flange of beams and girders shall be removed. The weld areas shall be ground flush and inspected for cracks using magnetic particle testing (MT) or dye penetrant testing (PT) by qualified personnel approved by the Engineer. Any cracks that cannot be removed by grinding ¼" deep shall be identified and reported to the Bureau of Bridges and Structures for further disposition. The cost of removing welded accessories, grinding, and inspecting weld areas and grinding cracks will be paid for according to Article 109.04 of the Standard Specifications.

Plan dimensions and details relative to existing plans are subject to nominal construction variations. The Contractor shall field verify existing dimensions and details affecting new construction and make necessary approved adjustments prior to construction or ordering of materials. Such variations shall not be cause for additional compensation for a change in scope of the work, however, the Contractor will be paid for quantity actually furnished at the unit price bid for the work.

All new structural steel and bearing assembly shall be hot-dip galvanized. See Special Provision for "Hot Dip Galvanizing for Structural Steel".

Existing structural steel that will be in contact with new structural steel shall be cleaned and painted prior to erection as required by the Special Provision for "Cleaning and Painting Contact Surface Areas of Existing Steel Structures".

TOTAL BILL OF MATERIAL

ITEM	UNIT	SN 041-0075	SN 041-0076	TOTAL
Stone Dumped Riprap, Class A3	Sq. Yd.	22	22	44
Filter Fabric	Sq. Yd.	22	22	44
Concrete Removal	Cu. Yd.	30.7	30.7	61.4
Structure Excavation	Cu. Yd.	152	152	304
Concrete Structures	Cu. Yd.	26.6	26.6	53.2
Concrete Superstructure	Cu. Yd.	44.2	44.2	88.4
Protective Coat	Sq. Yd.	632	632	1,264
Concrete Superstructure (Approach Slab)	Cu. Yd.	112.7	112.7	225.4
Furnishing and Erecting Structural Steel	Pound	2,460	2,460	4,920
Reinforcement Bars, Epoxy Coated	Pound	50,820	50,820	101,640
Elastomeric Bearing Assembly, Type I	Each	12	12	24
Anchor Bolts, ⅝"	Each	48	48	96
Granular Backfill for Structures	Cu. Yd.	152	152	304
Geocomposite Wall Drain	Sq. Yd.	101	101	202
Concrete Headwalls for Pipe Drains	Each	2	2	4
Pipe Underdrains for Structures 4"	Foot	172	172	344
Jack and Remove Existing Bearings	Each	12	12	24
Structural Steel Removal	Pound	2,880	2,880	5,760
Approach Slab Removal	Sq. Yd.	163	163	326
Bridge Deck Latex Concrete Overlay, 2 3/4 Inches	Sq. Yd.	652	652	1,304
Cleaning Bridge Seats	Sq. Ft.	231	231	462
Bridge Deck Scarification 2 1/2"	Sq. Yd.	652	652	1,304
Structural Repair of Concrete (Depth ≤ 5")	Sq. Ft.	26	24	50
Plug Existing Deck Drains	Each	14	14	28
Deck Slab Repair (Full Depth, Type I)	Sq. Yd.	1	1	2
Deck Slab Repair (Full Depth, Type II)	Sq. Yd.	19	45	64
Diamond Grinding (Bridge Section)	Sq. Yd.	951	951	1,902
Slope Wall Slurry Pumping	Cu. Yd.	50	50	100
Bridge Deck Grooving (Longitudinal)	Sq. Yd.	592	592	1,184

Notes:
1. Included in the cost of Pipe Underdrains for Structures, see Special Provisions.
2. For details of Fabric Reinforced Elastomeric Mat, see sheet 6 of 24.
3. All drainage system components shall extend to 2'-0" from the end of each wingwall except an outlet pipe shall extend until intersecting with the side slopes. The pipes shall drain into concrete headwalls. See Article 601.05 of the Standard Specifications and Highway Standard 601101.

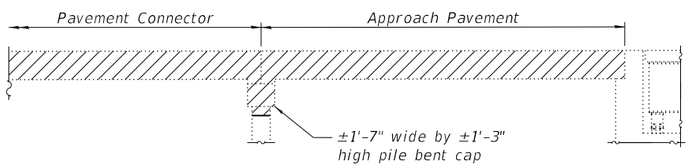

APPROACH SLAB REMOVAL

Existing approach slab and pavement connector to be removed. Buried pile bent cap to be completely removed. Piles shall be removed to 2' below finished grade. All work shall be paid for as Approach Slab Removal.

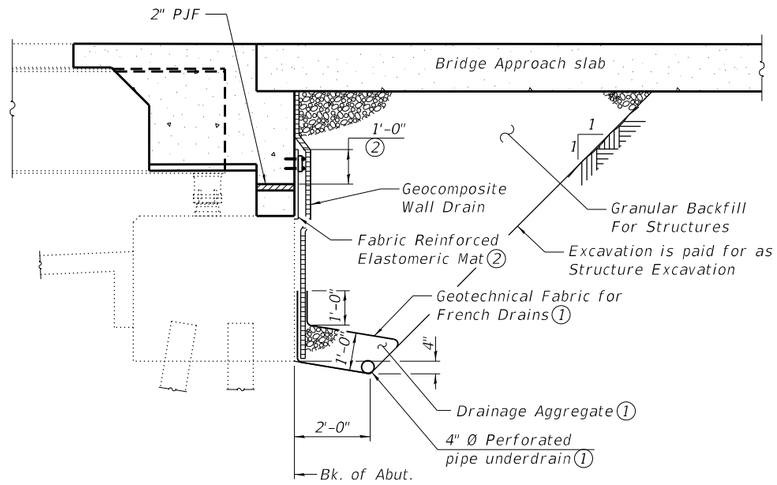

SECTION THRU SEMI-INTEGRAL ABUTMENT

(Horiz. dim. @ Rt. ∠'s)

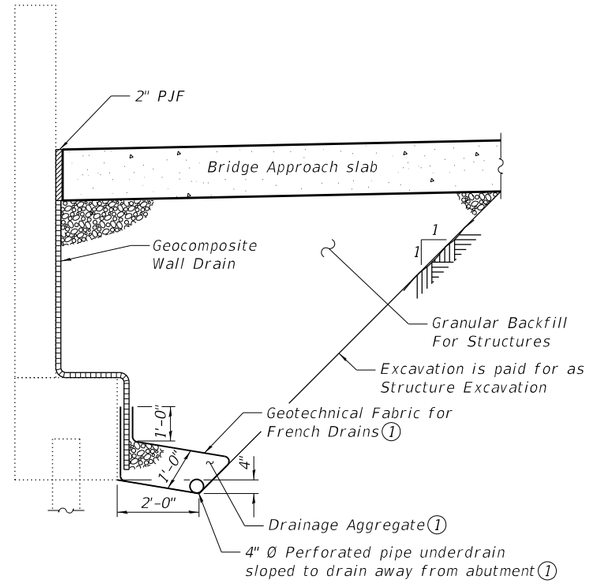

SECTION THRU ABUTMENT WINGWALL

(Horiz. dim. @ Rt. ∠'s)

FILE NAME: \\Oates-fs02\data\PA220060 - I-64\Microstation\041-0075_0076\0410075_0076-002-General Data.dgn

OATES ASSOCIATES
www.oatesassociates.com
ILLINOIS DESIGN FIRM LICENSE NO.: 184.001115

USER NAME =	DESIGNED - KBC	REVISED -	
	CHECKED - ETH	REVISED -	
PLOT SCALE =	DRAWN - NBB	REVISED -	
PLOT DATE = 11/10/2022	CHECKED - KBC	REVISED -	

STATE OF ILLINOIS
DEPARTMENT OF TRANSPORTATION

GENERAL DATA
SN 041-0075 (E.B.) & 041-0076 (W.B.)
SHEET 2 OF 24 SHEETS

F.A.I. RTE.	SECTION	COUNTY	TOTAL SHEETS	SHEET NO.
64	(41-6,41-6-1,41-7)RS-2,BSMART 2023	JEFFERSON	1052	358
		CONTRACT NO. 78604		
	ILLINOIS	FED. AID PROJECT		

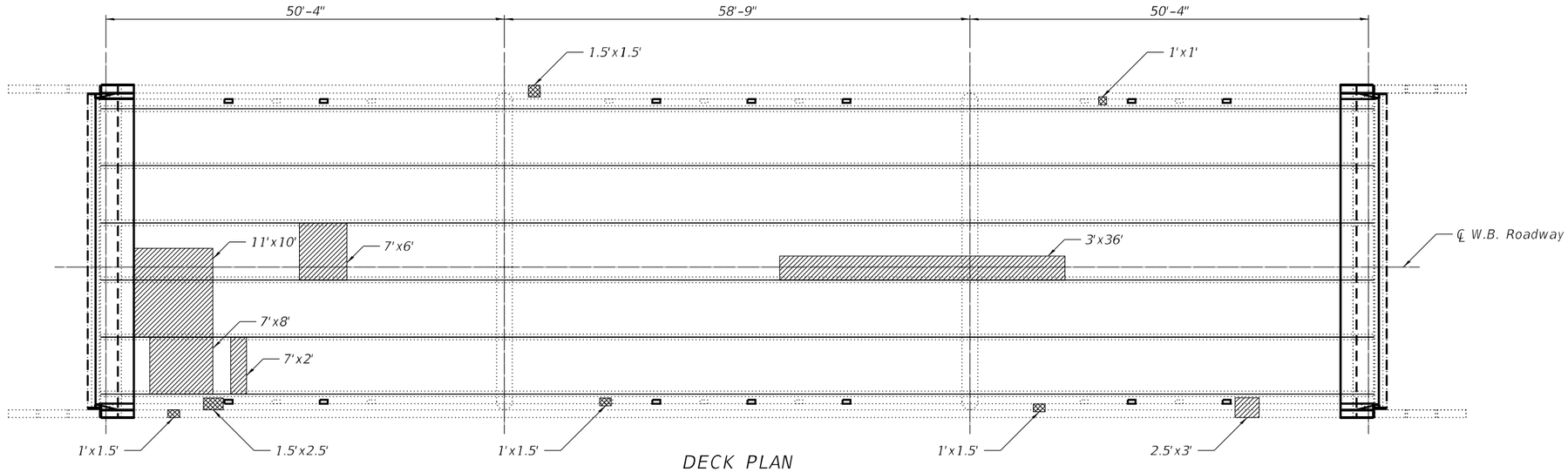

DECK PLAN
SN 041-0076

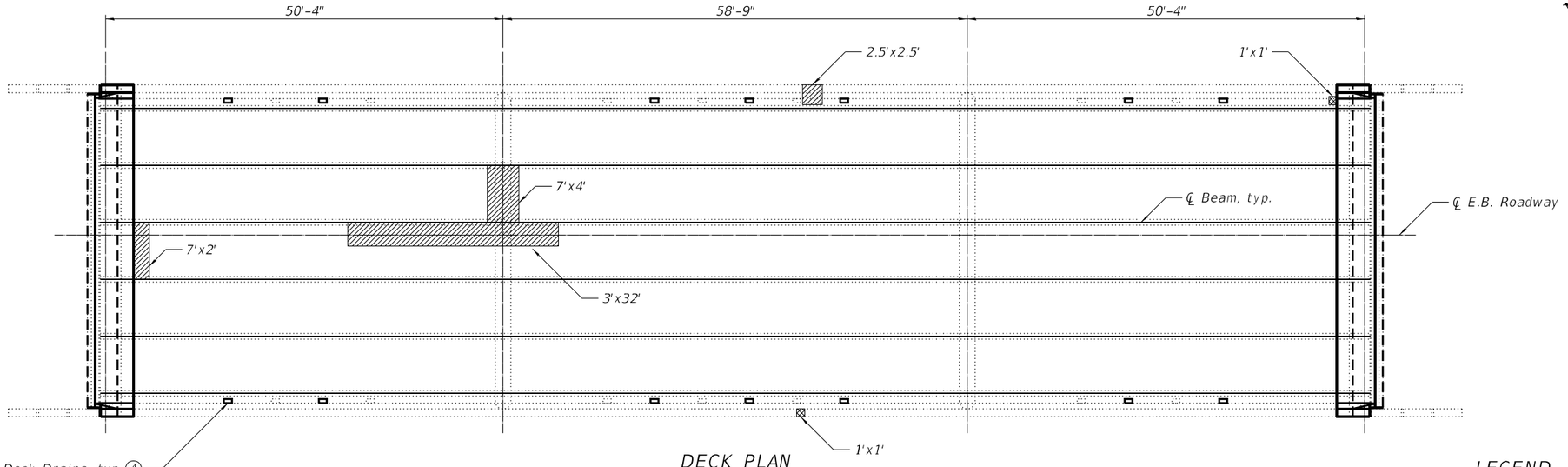

DECK PLAN
SN 041-0075

LEGEND

Deck Slab Repair (Full Depth, Type I)

Deck Slab Repair (Full Depth, Type II)

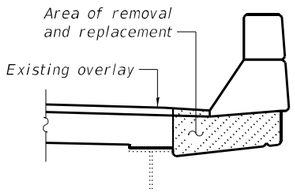

TYPICAL DECK SLAB REPAIR AT OVERHANG

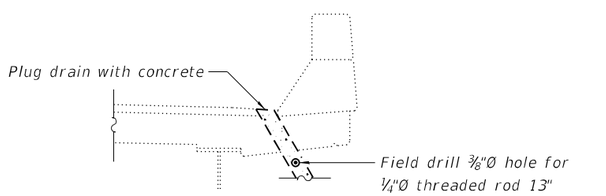

DECK DRAIN PLUG DETAIL

BILL OF MATERIAL

	ITEM	UNIT	SN 041-0075	SN 041-0076	TOTAL
	Deck Slab Repair (Full Depth, Type I)	Sq. Yd.	1	1	2
(3)	Deck Slab Repair (Full Depth, Type II)	Sq. Yd.	19	45	64
	Plug Existing Deck Drains	Each	14	14	28

Notes:
1. The Resident Engineer will determine final treatment locations and quantities in the field after removal of concrete wearing surface, before deck treatment operations begin.
2. The Engineer shall show actual locations of deck repairs on As-built Plans.
3. Deck Slab Repair quantities shown include an additional 20% for repair areas not visually identified in the field.
4. If present, drain extensions shall be removed. Cost included in Plug Existing Deck Drains.

FILE NAME: H:\P220060 - I-64\Microstation\041-0075_0076\041-0075_0076-003-Deck Patching Plan.dgn

OATES ASSOCIATES
www.oatesassociates.com
ILLINOIS DESIGN FIRM LICENSE NO.: 184.001115

USER NAME =		DESIGNED - ETH	REVISED -	
		CHECKED - KBC	REVISED -	
PLOT SCALE =		DRAWN - ETH	REVISED -	
PLOT DATE =	11/4/2022	CHECKED - KBC	REVISED -	

STATE OF ILLINOIS
DEPARTMENT OF TRANSPORTATION

DECK PATCHING PLAN
SN 041-0075 (E.B.) & 041-0076 (W.B.)
SHEET 3 OF 24 SHEETS

F.A.I. RTE.	SECTION	COUNTY	TOTAL SHEETS	SHEET NO.
64	(41-6,41-6-1,41-7)RS-2,BSMART 2023	JEFFERSON	1052	359
		CONTRACT NO. 78604		
	ILLINOIS	FED. AID PROJECT		

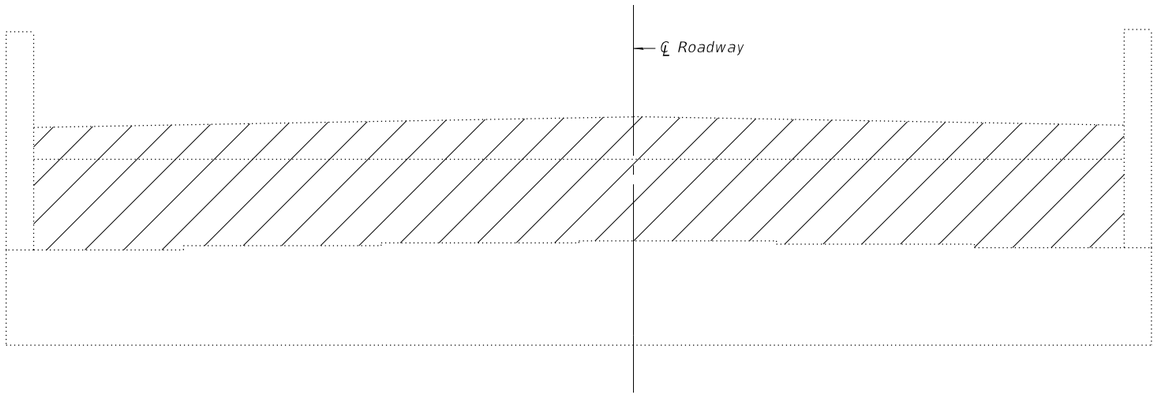

ELEVATION

SN 041-0075 west abutment shown, SN 041-0075 east abutment similar
SN 041-0076 east abutment shown, SN 041-0076 west abutment similar

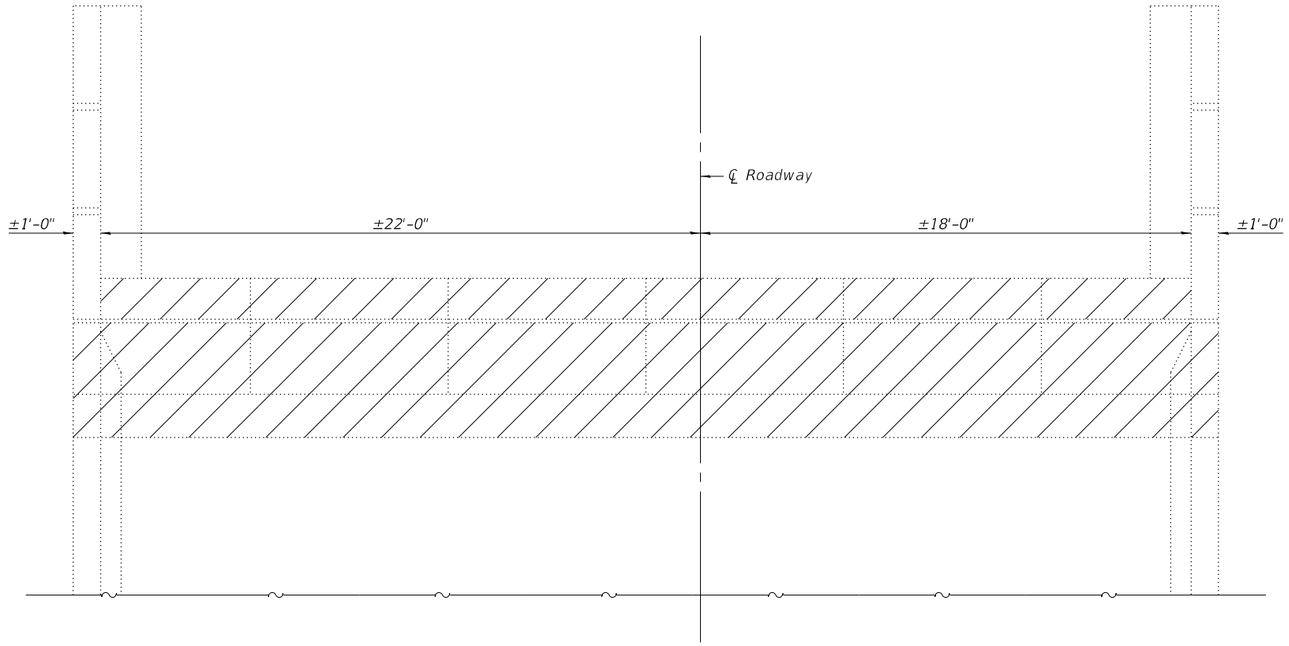

PLAN

SN 041-0075 west abutment shown, SN 041-0075 east abutment similar
SN 041-0076 east abutment shown, SN 041-0076 west abutment similar

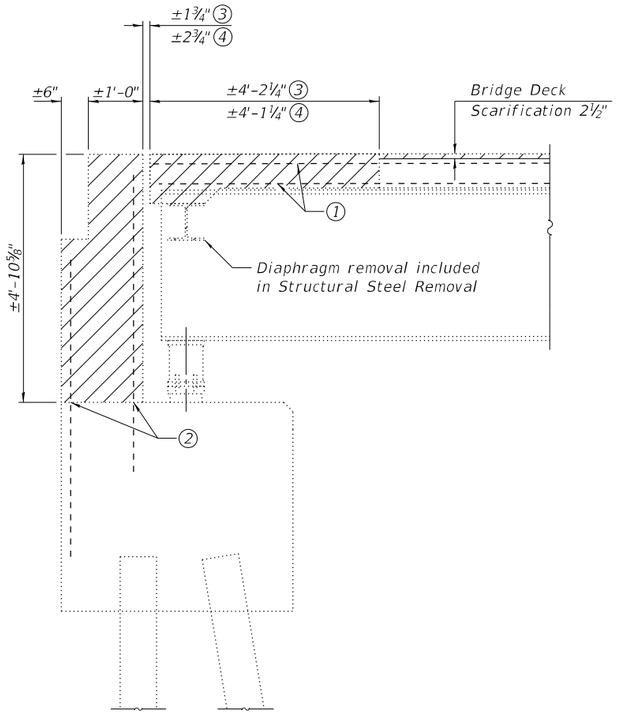

SECTION THRU ABUTMENT

LEGEND

Concrete Removal

BILL OF MATERIAL

(Four Abutments)

ITEM	UNIT	TOTAL
Concrete Removal	Cu. Yd.	61.4

Notes:
① Existing reinforcement extending into removal area as shown shall be cleaned, straightened, and incorporated into the new construction. Any reinforcement bars that are damaged during concrete removal shall be replaced with an approved bar splicer anchorage system. Cost shall be included with Concrete Removal.
② Existing vertical reinforcement extending into backwall shall be cut flush and sealed with epoxy.
③ West Abutment
④ East Abutment

FILE NAME: H:\P220060 - I-64\Microstation\041-0075_0076\041-0075_0076-004-Removal Details.dgn

OATES ASSOCIATES
www.oatesassociates.com
ILLINOIS DESIGN FIRM LICENSE NO.: 184.001115

USER NAME =	DESIGNED - ETH	REVISED -	
	CHECKED - KBC	REVISED -	
PLOT SCALE =	DRAWN - ETH	REVISED -	
PLOT DATE = 11/4/2022	CHECKED - KBC	REVISED -	

STATE OF ILLINOIS
DEPARTMENT OF TRANSPORTATION

REMOVAL DETAILS
SN 041-0075 (E.B.) & 041-0076 (W.B.)
SHEET 4 OF 24 SHEETS

F.A.I. RTE.	SECTION	COUNTY	TOTAL SHEETS	SHEET NO.
64	(41-6,41-6-1,41-7)RS-2,BSMART 2023	JEFFERSON	1052	360
		CONTRACT NO. 78604		
	ILLINOIS FED. AID PROJECT			

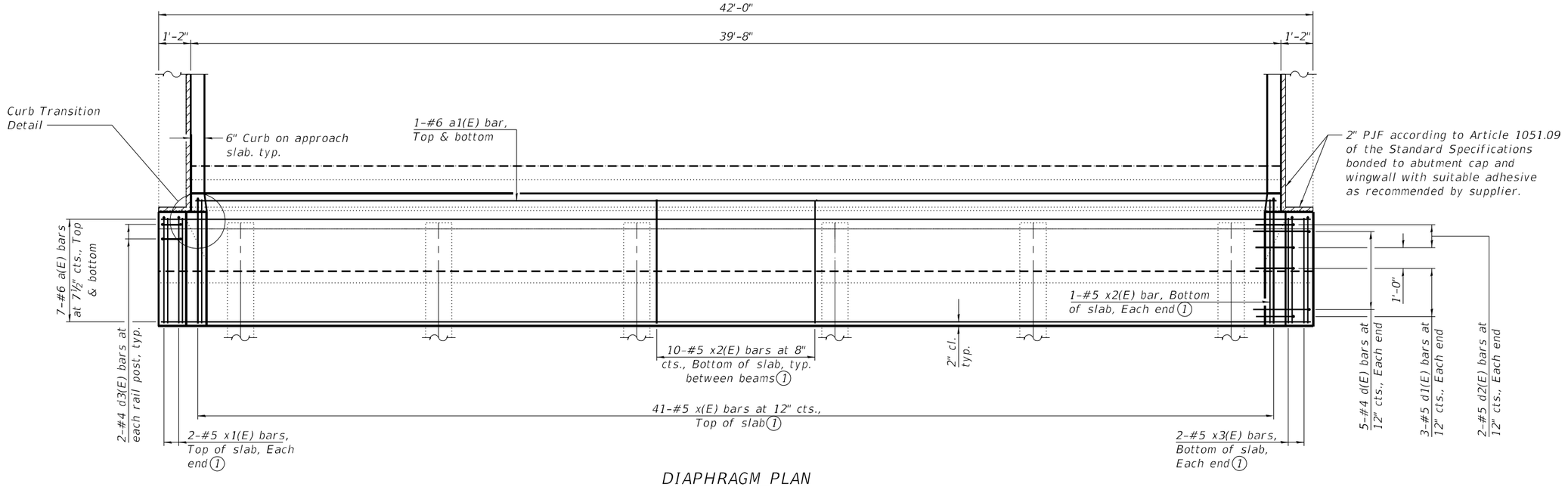

DIAPHRAGM PLAN

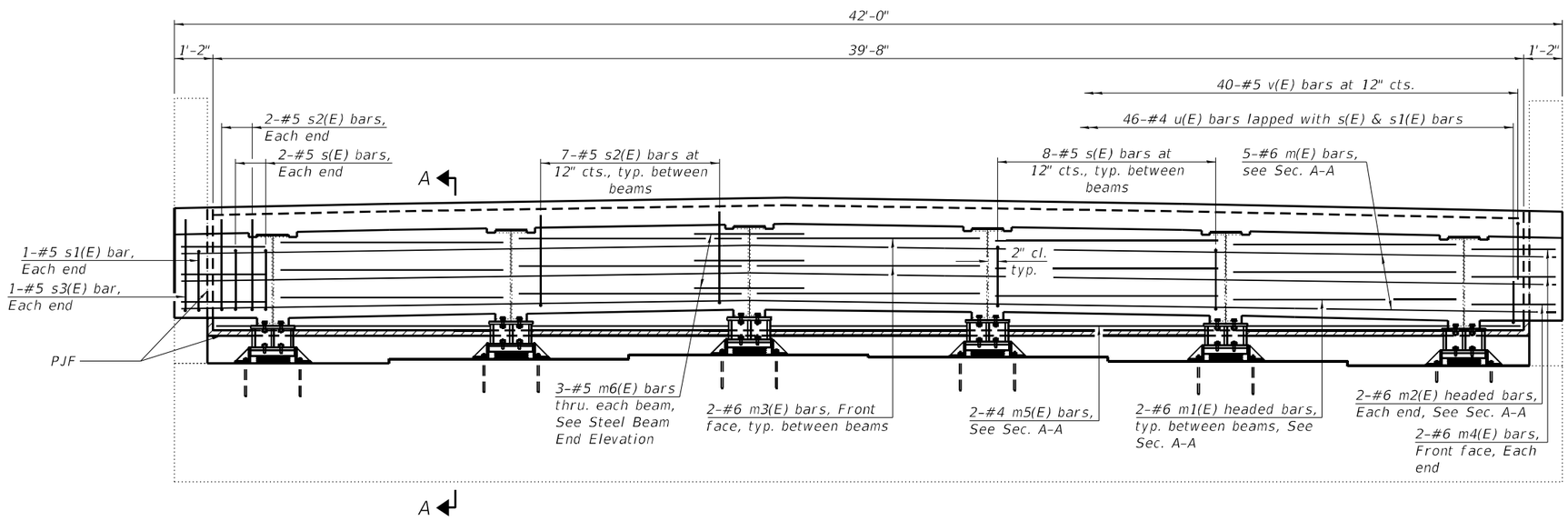

DIAPHRAGM ELEVATION

Notes:
1. x(E), x1(E), x2(E), & x3(E) bars shall be lapped with existing longitudinal reinforcement in deck.
2. For Section A-A, curb transition, and diaphragm details, See Sheet 6 of 24.
3. For Steel Beam End Elevation, Bill of Material, and additional diaphragm details, See Sheet 7 of 24.

FILE NAME: H:\Pt220060 - I-64\Microstation\041-0075_0076\041010075_0076-005-Diaphragm Plan & Elevation.dgn

OATES ASSOCIATES
www.oatesassociates.com
ILLINOIS DESIGN FIRM LICENSE NO.: 184.001115

USER NAME =	DESIGNED - ETH	REVISED -	
	CHECKED - KBC	REVISED -	
PLOT SCALE =	DRAWN - NBB	REVISED -	
PLOT DATE = 11/4/2022	CHECKED - ETH	REVISED -	

STATE OF ILLINOIS
DEPARTMENT OF TRANSPORTATION

DIAPHRAGM PLAN & ELEVATION
SN 041-0075 (E.B.) & 041-0076 (W.B.)
SHEET 5 OF 24 SHEETS

F.A.I. RTE.	SECTION	COUNTY	TOTAL SHEETS	SHEET NO.
64	(41-6,41-6-1,41-7)RS-2,BSMART 2023	JEFFERSON	1052	361
		CONTRACT NO. 78604		
	ILLINOIS	FED. AID PROJECT		

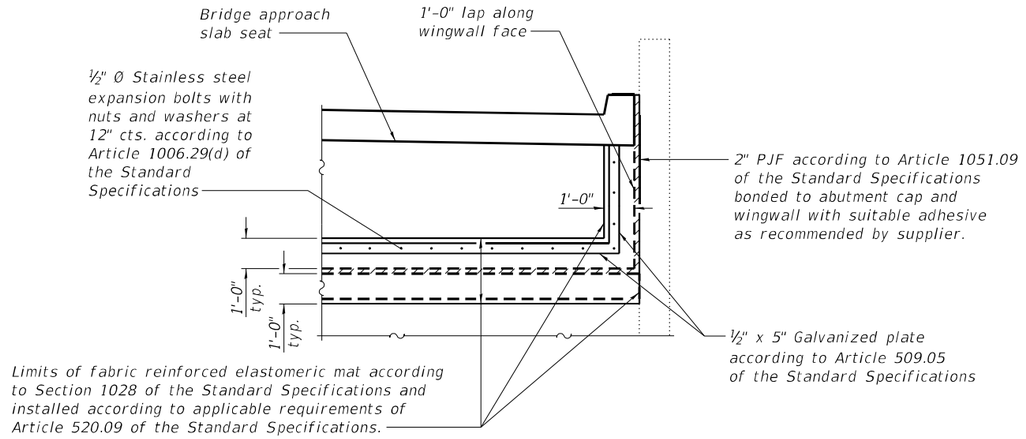

PARTIAL ELEVATION

(Looking at back of abutment)

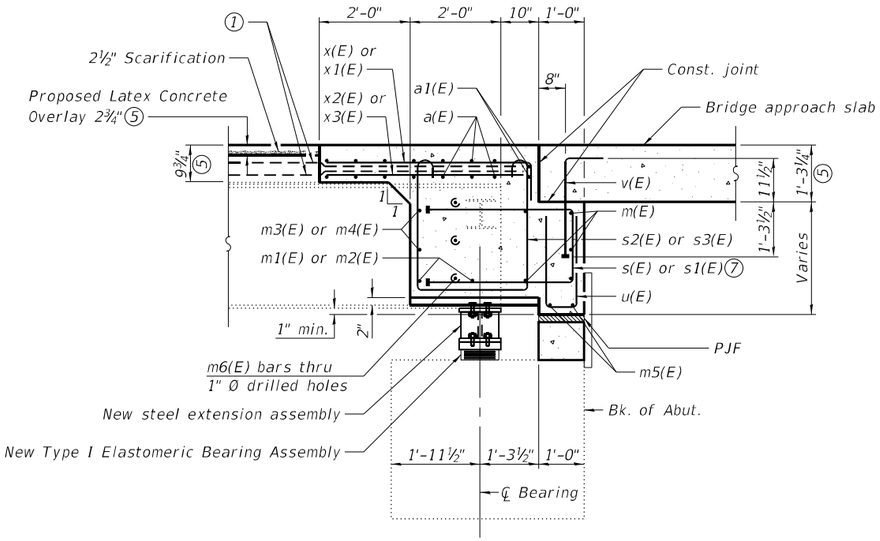

SECTION A-A

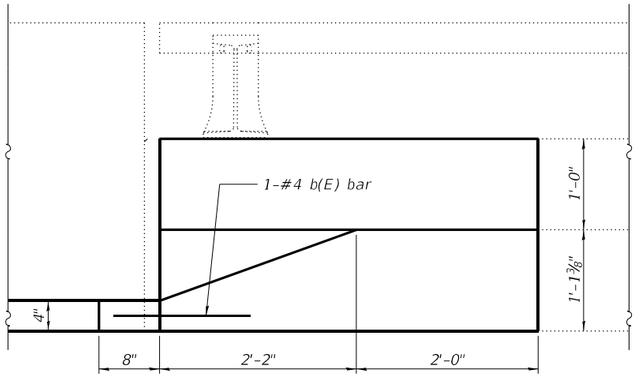

CURB TRANSITION ELEVATIONS ⑥

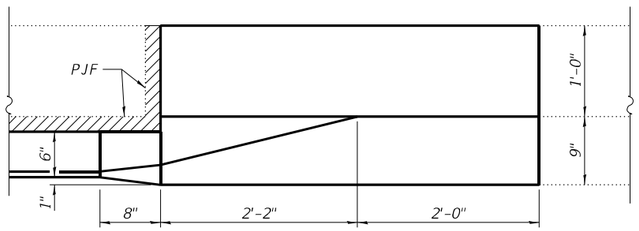

CURB TRANSITION PLAN ⑥

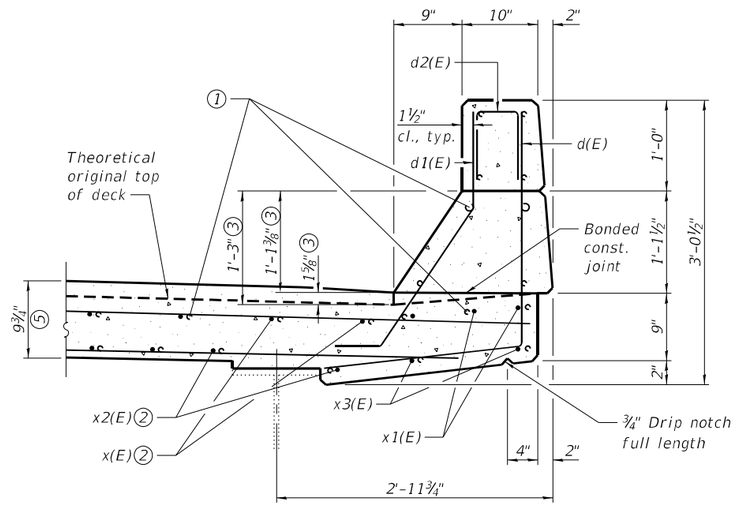

SECTION THRU PARAPET

Notes:

1. Existing reinforcement extending into removal area as shown shall be cleaned, straightened, and incorporated into the new construction. Any reinforcement bars that are damaged during concrete removal shall be replaced with an approved bar splicer anchorage system. Cost shall be included with Concrete Removal.
2. x(E), x1(E), x2(E), & x3(E) bars shall be lapped with existing longitudinal reinforcement in deck.
3. Based on original 7½" deck. Proposed parapet section to align with existing parapet section.
4. Cost of fabric reinforced elastomeric mats, galvanized angles and plates, stainless steel expansion bolts with nuts and washers, galvanized bolts with nuts and washers and installation are included in the cost of Concrete Superstructure.
5. Proposed dimensions are shown prior to ¼" Diamond Grinding of overlay and approach slabs.
6. Transition parapet curb to approach curb as shown.
7. Field drill 1¼" Ø holes for s(E) bars through existing diaphragm as required, cost included with Concrete Superstructure.

FILE NAME: H:\P2220060 - I-64\Microstation\041-0075_0076\041007S_0076-006-Diaphragm Details.dgn

OATES ASSOCIATES
www.oatesassociates.com
ILLINOIS DESIGN FIRM LICENSE NO.: 184.001115

USER NAME =		DESIGNED - ETH	REVISED -	
		CHECKED - KBC	REVISED -	
PLOT SCALE =		DRAWN - NBB	REVISED -	
PLOT DATE =	11/4/2022	CHECKED - ETH	REVISED -	

STATE OF ILLINOIS
DEPARTMENT OF TRANSPORTATION

DIAPHRAGM DETAILS
SN 041-0075 (E.B.) & 041-0076 (W.B.)
SHEET 6 OF 24 SHEETS

F.A.I. RTE.	SECTION	COUNTY	TOTAL SHEETS	SHEET NO.
64	(41-6,41-6-1,41-7)RS-2,BSMART 2023	JEFFERSON	1052	362
		CONTRACT NO. 78604		
	ILLINOIS FED. AID PROJECT			

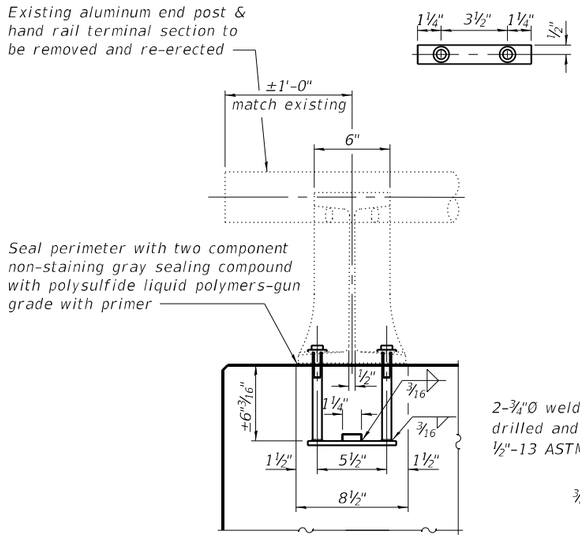

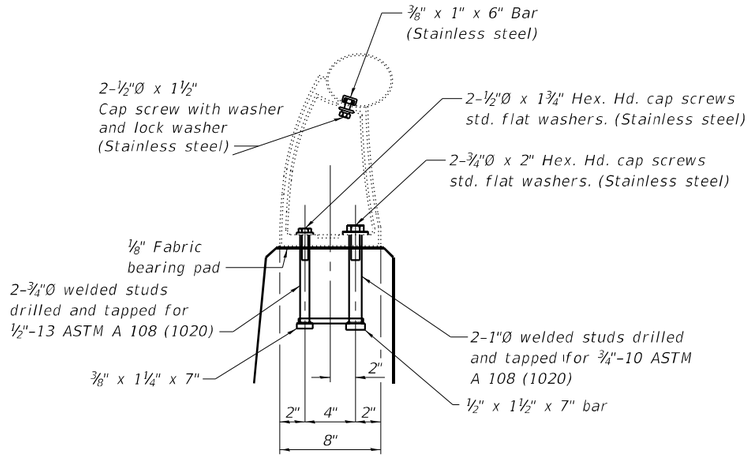

RAIL POST DETAILS

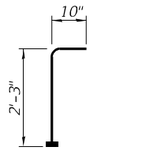

BAR v(E)
(Headed)

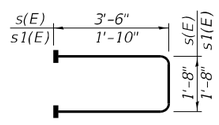

BARS s(E) & s1(E)
(Headed)

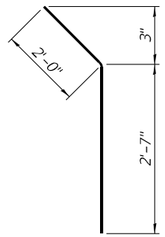

BAR d(E)

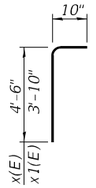

BARS x(E) & x1(E)

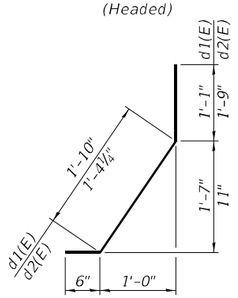

BARS d1(E) & d2(E)

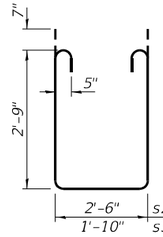

BARS s2(E) & s3(E)



BARS m1(E) & m2(E)
(Headed)

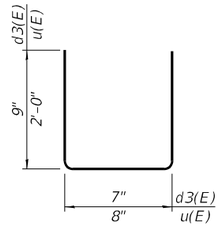

BARS d3(E) & u(E)

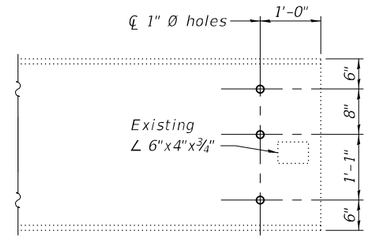

STEEL BEAM END ELEVATION

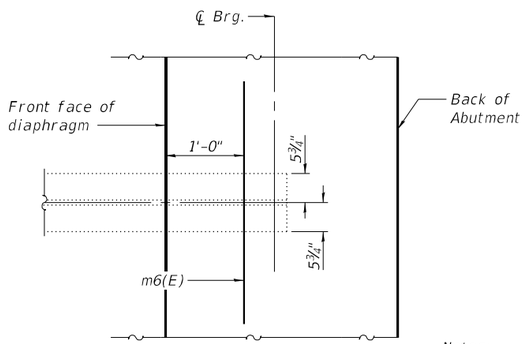

PARTIAL PLAN AT BEAMS

(Showing bottom flange of beam)

BILL OF MATERIAL

(Four Diaphragms)

Bar	No.	Size	Length	Shape
a(E)	56	#6	41'-8"	
a1(E)	8	#6	39'-4"	
b(E)	8	#4	1'-6"	
d(E)	40	#4	4'-7"	
d1(E)	24	#5	3'-5"	
d2(E)	16	#5	3'-7"	
d3(E)	16	#4	2'-1"	
m(E)	20	#6	39'-4"	
m1(E)	40	#6	6'-9"	
m2(E)	16	#6	2'-7"	
m3(E)	40	#6	6'-9"	
m4(E)	16	#6	2'-7"	
m5(E)	8	#4	39'-4"	
m6(E)	72	#5	4'-0"	
s(E)	176	#5	8'-8"	
s1(E)	8	#5	5'-4"	
s2(E)	156	#5	9'-2"	
s3(E)	8	#5	8'-6"	
u(E)	176	#4	4'-8"	
v(E)	160	#5	3'-1"	
x(E)	164	#5	5'-4"	
x1(E)	16	#5	4'-8"	
x2(E)	208	#5	4'-6"	
x3(E)	16	#5	3'-10"	
Reinforcement Bars, Epoxy Coated			Pound	13,200
Concrete Superstructure			Cu. Yd.	88.4

Notes:
1. Rail shall be removed and re-erected as necessary to allow structure modifications. Cost included in Concrete Removal.
2. Headed bars shall conform to ASTM A970 with threaded attachment; Class HA; and reinforcement bars conforming to ASTM A706. Cost included with Reinforcement Bars, Epoxy Coated.

FILE NAME: H:\P220060 - I-64\Microstation\041-0075_0076\041010075_0076-007-Diaphragm Details.dgn

OATES ASSOCIATES
www.oatesassociates.com
ILLINOIS DESIGN FIRM LICENSE NO.: 184.001115

USER NAME =		DESIGNED -	ETH	REVISED -
		CHECKED -	KBC	REVISED -
PLOT SCALE =		DRAWN -	NBB	REVISED -
PLOT DATE =	11/4/2022	CHECKED -	ETH	REVISED -

STATE OF ILLINOIS
DEPARTMENT OF TRANSPORTATION

DIAPHRAGM DETAILS
SN 041-0075 (E.B.) & 041-0076 (W.B.)
SHEET 7 OF 24 SHEETS

F.A.I. RTE.	SECTION	COUNTY	TOTAL SHEETS	SHEET NO.
64	(41-6,41-6-1,41-7)RS-2,BSMART 2023	JEFFERSON	1052	363
		CONTRACT NO. 78604		
	ILLINOIS FED. AID PROJECT			

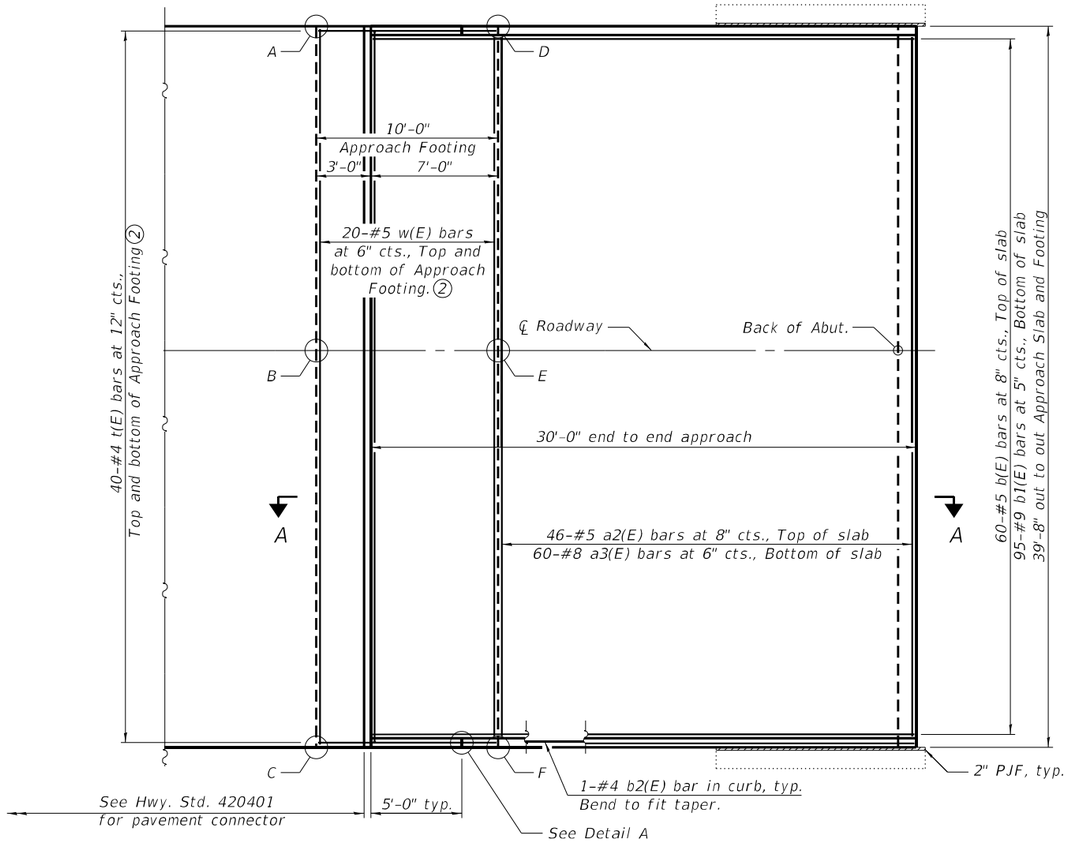

PLAN

SN 041-0075 west approach slab shown, SN 041-0075 east approach slab shown, SN 041-0076 east approach slab similar
SN 041-0076 east approach slab shown, SN 041-0076 west approach slab similar

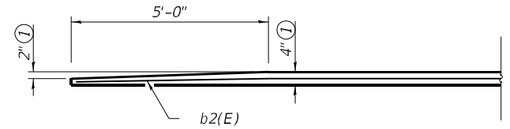

DETAIL A

TOP AND BOTTOM ELEVATIONS FOR APPROACH FOOTING (3)

West Approach			East Approach		
Point/ Location	Top	Bottom	Point/ Location	Top	Bottom
A			A		
B			B		
C			C		
D			D		
E			E		
F			F		

West Approach			East Approach		
Point/ Location	Top	Bottom	Point/ Location	Top	Bottom
A			A		
B			B		
C			C		
D			D		
E			E		
F			F		

Notes:
(1) Proposed dimensions are shown following ¼" Diamond Grinding of overlay and approach slabs.
(2) For Section A-A, see sheet 9 of 24.
(3) Elevations to be set by Engineer in the field to accommodate existing bridge elevations and proposed roadway elevations.

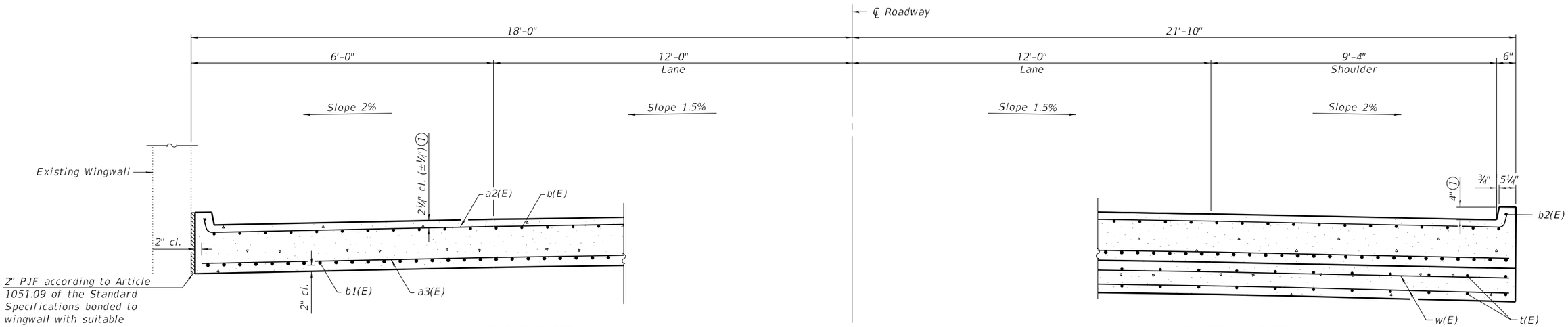

NEAR ABUTMENT

CROSS SECTION

(Looking in the direction of traffic)

AT APPROACH FOOTING

(Sheet 1 of 2)

FILE NAME: H:\P\220060 - I-64\Microstation\041-0075_0076\041-0075_0076-008-Bridge Approach Slab Details.dgn

OATES ASSOCIATES
www.oatesassociates.com
ILLINOIS DESIGN FIRM LICENSE NO.: 184.001115

USER NAME =		DESIGNED - ORG	REVISED -
		CHECKED - ETH	REVISED -
PLOT SCALE =		DRAWN - ORG	REVISED -
PLOT DATE =	11/4/2022	CHECKED - ETH	REVISED -

STATE OF ILLINOIS
DEPARTMENT OF TRANSPORTATION

APPROACH SLAB DETAILS
SN 041-0075 (E.B.) & 041-0076 (W.B.)
SHEET 8 OF 24 SHEETS

F.A.I. RTE.	SECTION	COUNTY	TOTAL SHEETS	SHEET NO.
64	(41-6,41-6-1,41-7)RS-2,BSMART 2023	JEFFERSON	1052	364
		CONTRACT NO. 78604		
	ILLINOIS FED. AID PROJECT			

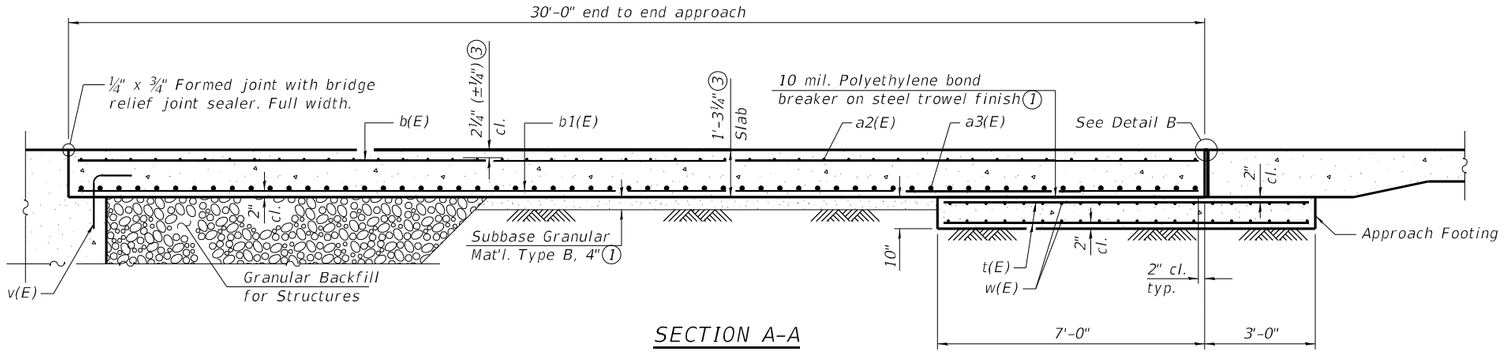

SECTION A-A

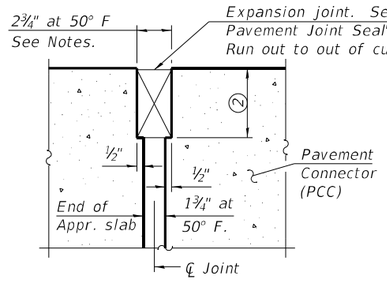

DETAIL B

BILL OF MATERIAL

(Four Approaches)

Bar	No.	Size	Length	Shape
a2(E)	184	#5	39'-9"	
a3(E)	240	#8	39'-4"	
b(E)	240	#5	29'-8"	
b1(E)	380	#9	29'-8"	
b2(E)	8	#4	29'-8"	
t(E)	320	#4	9'-8"	
w(E)	160	#5	39'-4"	
Concrete Structures			Cu. Yd.	49.0
Concrete Superstructure (Approach Slab)			Cu. Yd.	225.4
Reinforcement Bars, Epoxy Coated			Pound	87,380

Notes:
(1) Cost included with Concrete Superstructure (Approach Slab).
(2) Per manufacturer recommendations.
(3) Proposed dimensions are shown prior to ¼" Diamond Grinding of overlay and approach slabs.
(4) The joint opening shall be adjusted for temperature per Article 520.04 of the Standard Specifications. However, since this detail is for jointless structures, the length of bridge used to calculate the adjustment shall be equal to half the total bridge length plus the length of the bridge approach slab.
(5) Approach slab shall be paid for as Concrete Superstructure (Approach Slab).
(6) Approach footing concrete shall be paid for as Concrete Structures.
(7) The approach footing maximum applied service bearing pressure (Qmax) = 2.0 ksf.
(8) Cost of excavation for approach footing included with Concrete Structures.
(9) For Granular Backfill for Structures and drainage treatment details, see sheet 2 of 24.

FILE NAME: H:\PX220060 - I-64\Microstation\041-0075_0076\0410075_0076-009-Bridge Approach Slab Details.dgn

OATES ASSOCIATES
www.oatesassociates.com
ILLINOIS DESIGN FIRM LICENSE NO.: 184.001115

USER NAME =	DESIGNED - KBC	REVISED -	
	CHECKED - ETH	REVISED -	
PLOT SCALE =	DRAWN - KBC	REVISED -	
PLOT DATE = 11/4/2022	CHECKED - ETH	REVISED -	

STATE OF ILLINOIS
DEPARTMENT OF TRANSPORTATION

APPROACH SLAB DETAILS
SN 041-0075 (E.B.) & 041-0076 (W.B.)
SHEET 9 OF 24 SHEETS

F.A.I. RTE.	SECTION	COUNTY	TOTAL SHEETS	SHEET NO.
64	(41-6,41-6-1,41-7)RS-2,BSMART 2023	JEFFERSON	1052	365
		CONTRACT NO. 78604		
	ILLINOIS	FED. AID PROJECT		

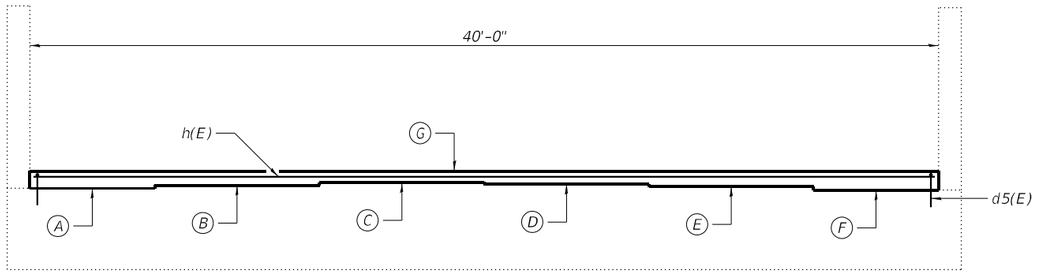

ELEVATION

SN 041-0075 east abutment shown, SN 041-0075 west abutment similar
SN 041-0076 west abutment shown, SN 041-0076 east abutment similar

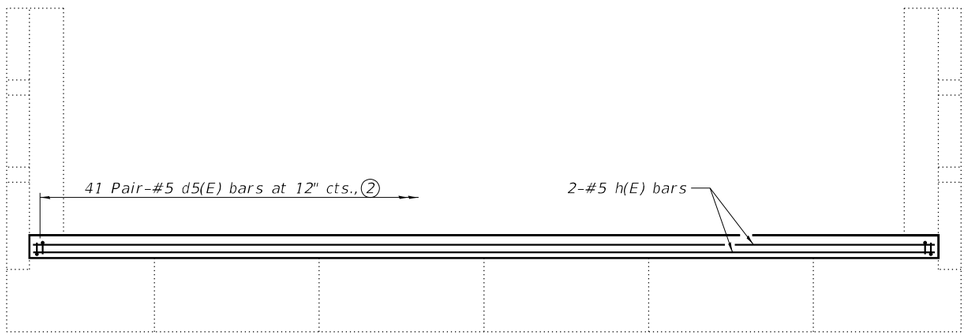

PLAN

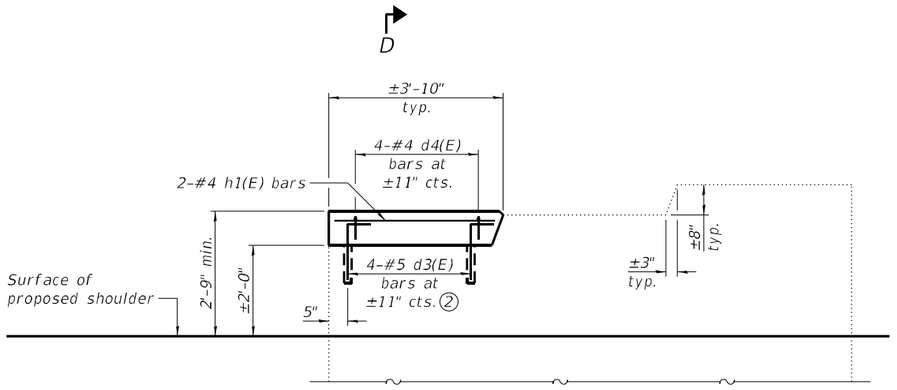

WINGWALL ELEVATION ③

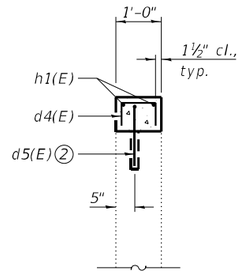

SECTION D-D

Location	Elev. A	Elev. B	Elev. C	Elev. D	Elev. E	Elev. F	Elev. G
041-0075 - West Abut.	457.00	457.13	457.25	457.18	457.07	456.92	457.75
041-0075 - East Abut.	457.07	457.20	457.32	457.25	457.14	456.99	457.82
041-0076 - West Abut.	457.00	457.13	457.25	457.18	457.07	456.92	457.75
041-0076 - East Abut.	457.07	457.20	457.32	457.25	457.14	456.99	457.82

ELEVATIONS ①

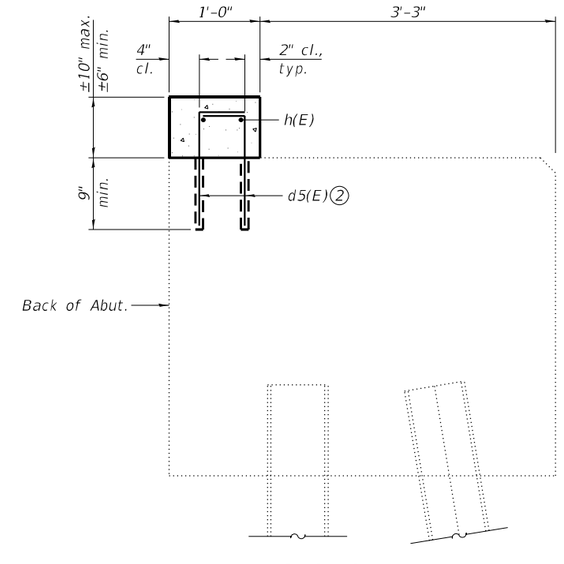

SECTION THRU EXISTING PILE CAP

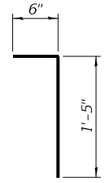

BAR d5(E)

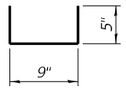

BAR d4(E)

BILL OF MATERIAL

(Four Abutments)

Bar	No.	Size	Length	Shape
d4(E)	16	#4	1'-7"	⊓
d5(E)	344	#5	1'-11"	⊓
h(E)	8	#5	39'-8"	———
h1(E)	8	#4	3'-6"	———
Concrete Structures			Cu. Yd.	4.2
Reinforcement Bars, Epoxy Coated			Pound	1,060

Notes:
① Elevations are based on existing plans and are provided as a reference point. Actual elevations and dimensions in the field may vary.
② Epoxy grout d5(E) bars in 9" min. drilled holes according to Section 584 of the Standard Specifications. Trim bars to fit before grouting.
③ For wingwalls to be modified, see sheet 1 of 24.

FILE NAME: H:\P\220060 - I-64\Microstation\041-0075_0076\041075_0076-010-Abutment Details.dgn

OATES ASSOCIATES
www.oatesassociates.com
ILLINOIS DESIGN FIRM LICENSE NO.: 184.001115

USER NAME =	DESIGNED - ETH	REVISED -	
	CHECKED - KBC	REVISED -	
PLOT SCALE =	DRAWN - ETH	REVISED -	
PLOT DATE = 11/4/2022	CHECKED - KBC	REVISED -	

STATE OF ILLINOIS
DEPARTMENT OF TRANSPORTATION

ABUTMENT DETAILS
SN 041-0075 (E.B.) & 041-0076 (W.B.)
SHEET 10 OF 24 SHEETS

F.A.I. RTE.	SECTION	COUNTY	TOTAL SHEETS	SHEET NO.
64	(41-6,41-6-1,41-7)RS-2,BSMART 2023	JEFFERSON	1052	366
		CONTRACT NO. 78604		
	ILLINOIS FED. AID PROJECT			

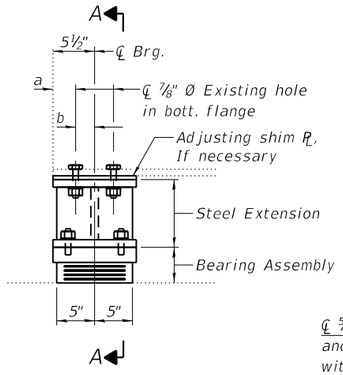

ELEVATION ⑧

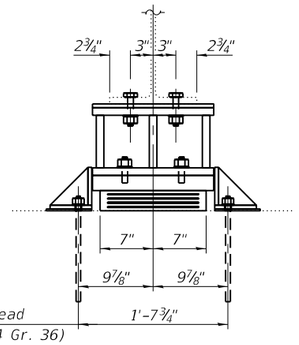

℄ ⅝" Ø x 12" All-thread anchor bolts (F 1554 Gr. 36) with 1¾" x 1¾" x 5/16" PL washer under nut.

SECTION A-A

TYPE I ELASTOMERIC EXP. BRG.

BEARING SHIM PLATES (W.B. STRUCTURE)

	Beam 1	Beam 2	Beam 3	Beam 4	Beam 5	Beam 6
West Abut.	¼"	⅜"	¼"	⅜"	¼"	⅜"
East Abut.	⅜"	¼"	⅛"	–	⅜"	¼"

BEARING SHIM PLATES (E.B. STRUCTURE)

	Beam 1	Beam 2	Beam 3	Beam 4	Beam 5	Beam 6
West Abut.	⅜"	⅜"	⅜"	⅛"	¼"	½"
East Abut.	⅜"	⅜"	⅜"	⅜"	⅜"	⅜"

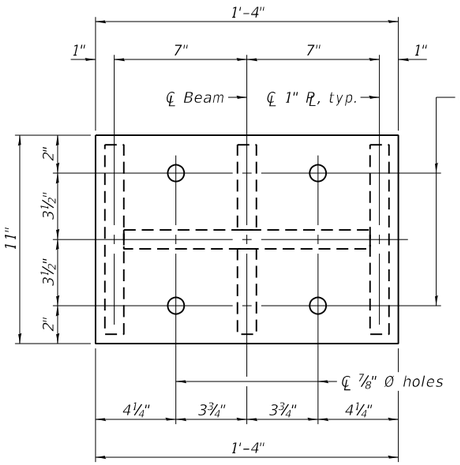

BOTTOM PLATE

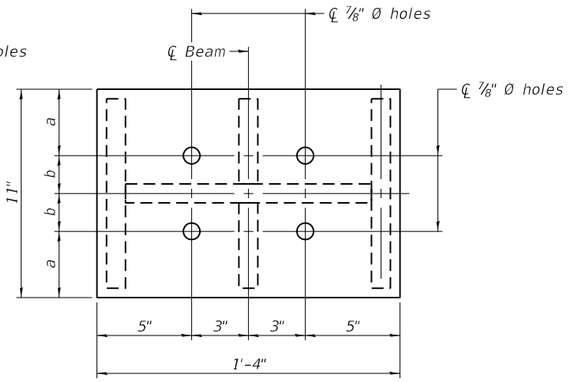

TOP PLATE ⑧

TOP PLATE HOLE LOCATIONS

Location	a	b
W.B. West Abut., Beams 1-4	3½"	2"
W.B. West Abut., Beams 5 & 6	3"	2"
E.B. West Abut., All Beams	3½"	2"
East Abut., All Beams	3"	2½"

INTERIOR BEAM REACTION TABLE

	Existing Service Loads	Proposed Service Loads
R DL (k)	21.2	51.5 ④
R LL (k)	42.4	42.4
Imp (k)	12.1	12.1
R Total (k)	75.7	106.0

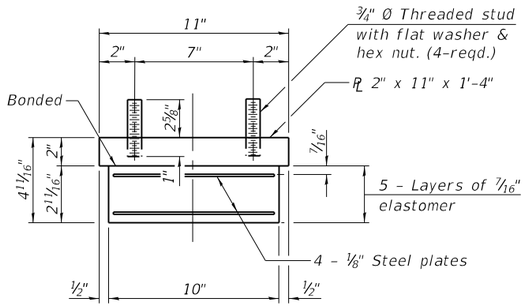

BEARING ASSEMBLY

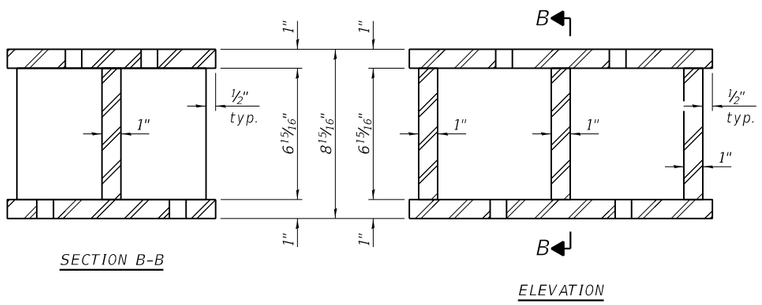

SECTION B-B

ELEVATION

STEEL EXTENSION

BILL OF MATERIAL

Item	Unit	Total
Furnishing and Erecting Structural Steel	Pound	4,920
Elastomeric Bearing Assembly, Type I	Each	24
Anchor Bolts, 5/8"	Each	96
Jack and Remove Existing Bearings	Each	24

Note:
Shim plates shall not be placed under bearing assembly.

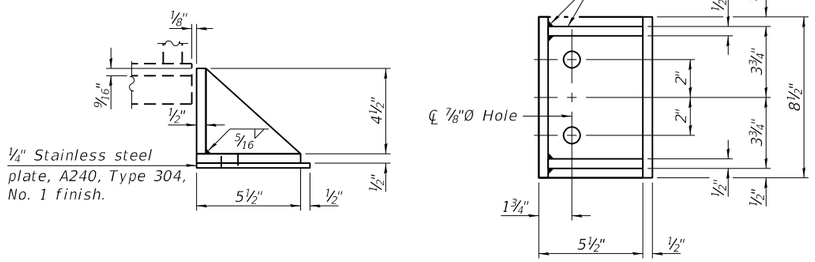

SIDE RETAINER

Equivalent rolled angle with stiffeners will be allowed in lieu of welded plates.

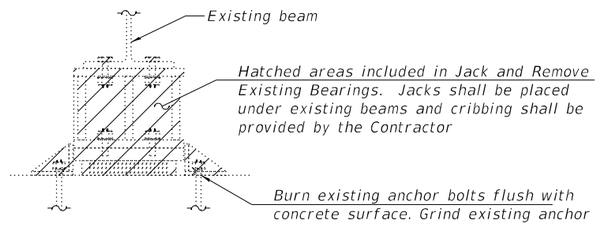

BEARING REMOVAL

Notes:
① New steel extension, shim plates, and connection bolts are included with Furnishing and Erecting Structural Steel.
② Prior to ordering any material, the Contractor shall verify in the field all the bearing height and shim thickness dimensions. Adjustment must account for deck heave due to pack rust, if present.
③ Minimum jack capacity = 16 tons.
④ Dead load reaction includes 30.3 kips for weight of diaphragm and approach slab.
⑤ Anchor bolts shall be ASTM F1554 all-thread (or an Engineer approved alternate material) of the grade and diameter specified. ASTM A 307 Grade C anchor bolts may used in lieu of ASTM F 1554 Grade 36 (Fy = 36 ksi). The corresponding specified grade of AASHTO M 314 anchor bolts may be used in lieu of ASTM F 1554.
⑥ Drilled and set anchors shall be installed according to Article 521.06 of the Standard Specifications.
⑦ Side retainers and stainless steel plates shall be included in the cost of Elastomeric Bearing Assembly, Type I.
⑧ See Top Plate Hole Locations for dimensions a and b.
⑨ For beam numbering layout, see sheet 18 of 24.

FILE NAME: \\Oates-fs02\data\P\220060 - I-64\Microstation\041-0075_0076\041075_0076-011-Bearing Details.dgn

OATES ASSOCIATES
www.oatesassociates.com
ILLINOIS DESIGN FIRM LICENSE NO.: 184.001115

USER NAME =	DESIGNED - ETH	REVISED -	
	CHECKED - KBC	REVISED -	
PLOT SCALE =	DRAWN - ETH	REVISED -	
PLOT DATE = 11/10/2022	CHECKED - KBC	REVISED -	

STATE OF ILLINOIS
DEPARTMENT OF TRANSPORTATION

BEARING DETAILS
SN 041-0075 (E.B.) & 041-0076 (W.B.)
SHEET 11 OF 24 SHEETS

F.A.I. RTE.	SECTION	COUNTY	TOTAL SHEETS	SHEET NO.
64	(41-6,41-6-1,41-7)RS-2,BSMART 2023	JEFFERSON	1052	367
		CONTRACT NO. 78604		
		ILLINOIS	FED. AID PROJECT	

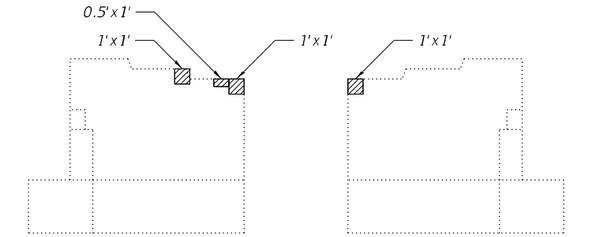

NORTH WINGWALL – SOUTH FACE
(Looking North)

NORTH WINGWALL – NORTH FACE
(Looking South)

SN 041-0075 EAST ABUTMENT

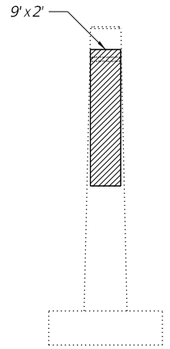

NORTH END
(Looking South)

SN 041-0075 PIER 2

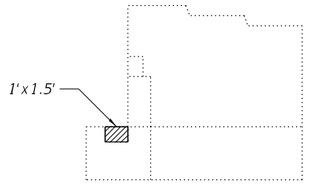

SOUTH END
(Looking North)

SN 041-0076 EAST ABUTMENT

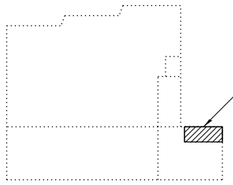

SOUTH END
(Looking North)



FRONT FACE
(Looking West)

SN 041-0076 WEST ABUTMENT



WEST FACE
(Looking East)



SOUTH END
(Looking North)



EAST FACE
(Looking West)

SN 041-0076 PIER 1

Structural Repair of Concrete (Depth Equal To or Less Than 5 Inches

BILL OF MATERIAL

(2)	Structural Repair of Concrete (Depth Equal To or Less Than 5 Inches	Sq. Ft.	50

Notes:
1. The Resident Engineer will determine final repair locations and quantities in the field after loose and spalled concrete has been removed.
2. Including an additional 8 Sq. ft. for areas not visually identified in the field.

FILE NAME: H:\P\220060 - I-64\Microstation\041-0075_0076\041075_0076-012-Substructure Repairs.dgn

OATES ASSOCIATES
www.oatesassociates.com
ILLINOIS DESIGN FIRM LICENSE NO.: 184.001115

USER NAME =	DESIGNED - ETH	REVISED -	
	CHECKED - KBC	REVISED -	
PLOT SCALE =	DRAWN - ETH	REVISED -	
PLOT DATE = 11/4/2022	CHECKED - KBC	REVISED -	

STATE OF ILLINOIS
DEPARTMENT OF TRANSPORTATION

SUBSTRUCTURE REPAIRS
SN 041-0075 (E.B.) & 041-0076 (W.B.)
SHEET 12 OF 24 SHEETS

F.A.I. RTE.	SECTION	COUNTY	TOTAL SHEETS	SHEET NO.
64	(41-6,41-6-1,41-7)RS-2,BSMART 2023	JEFFERSON	1052	368
		CONTRACT NO. 78604		
	ILLINOIS FED. AID PROJECT			

MMO 12/10/98
\94678d\d00298pa.dgn
MMO REV: 10-26-98
EJ 5

FAI RTE.	SECTION	COUNTY	TOTAL SHEETS	SHEET NO.
64	*	JEFFERSON	58	23

* D-7 BRIDGE DECK REPAIR 1999-1

BAR LIST - EACH ABUTMENT

BAR	NUMBER OF BARS STAGE I	STAGE II	TOTAL	SIZE	LENGTH METERS	SHAPE
a(E)	8	-	8	#16	5.691	
a1(E)	-	8	8	#16	6.910	
d(E)	2	2	4	#16	1.041	
d1(E)	2	2	4	#13	1.422	
d2(E)	2	2	4	#13	0.635	
h(E)	3	-	3	#16	5.158	
h1(E)	-	3	3	#16	6.377	
x(E)	18	22	40	#16	0.838	

BILL OF MATERIALS - BOTH ABUTMENTS

ITEM	UNIT	STAGE I	STAGE II	TOTAL
CONCRETE REMOVAL	CU MTR	4.9	5.6	10.5
PREFORMED JOINT SEAL, 64MM	METER	5.5	6.7	12.2
PREFORMED JOINT SEAL, 102MM	METER	5.5	6.7	12.2
CONCRETE SUPERSTRUCTURE	CU MTR	4.7	5.8	10.5
F & E STRUCTURAL STEEL	L SUM	107.5	134.5	2420
REINFORCEMENT BARS (EPOXY COATED)	KG	260	300	560
BAR SPLICERS (EPOXY COATED)	EACH	22	-	22

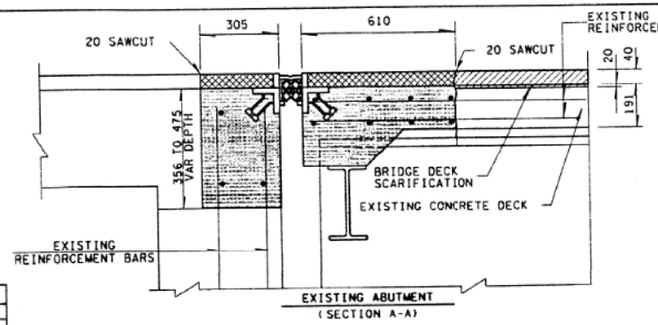

EXISTING ABUTMENT
(SECTION A-A)

NOTE: EXISTING REINFORCEMENT BARS SHALL BE CLEANED, STRAIGHTENED AND INCORPORATED INTO THE NEW CONCRETE

CONCRETE REMOVAL
BITUMINOUS CONCRETE REMOVAL
BITUMINOUS CONCRETE REMOVAL TO BE PAID FOR AS CONCRETE REMOVAL

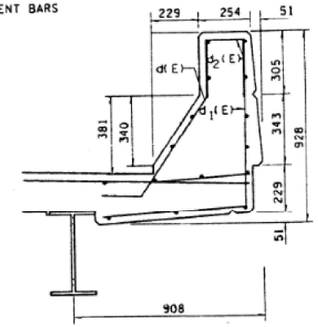

PARAPET DETAIL

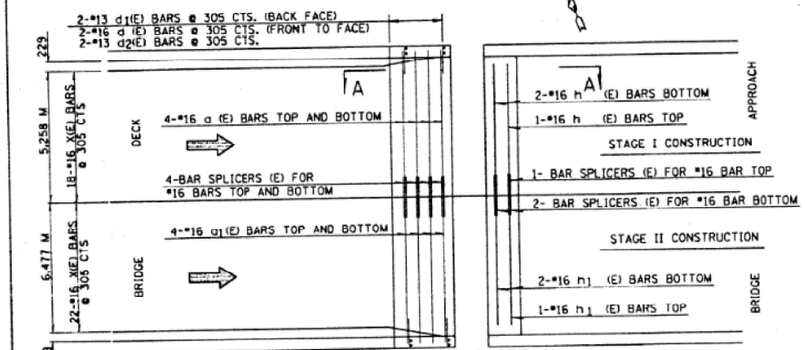

REINFORCEMENT DETAIL
EAST ABUTMENT (WEST ABUTMENT SIMILAR)

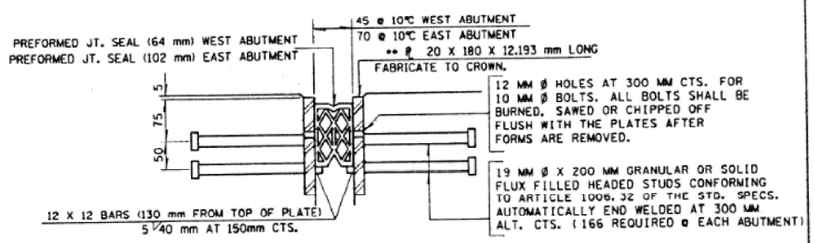

** FURNISH IN SEGMENTS OF 6 M MAXIMUM LENGTH MAXIMUM SPACE BETWEEN INSTALLED SEGMENTS SHALL BE 5 MM. SEAL SPACE WITH SILICONE SEALANT SUITABLE FOR STRUCTURAL STEEL.

DETAIL A

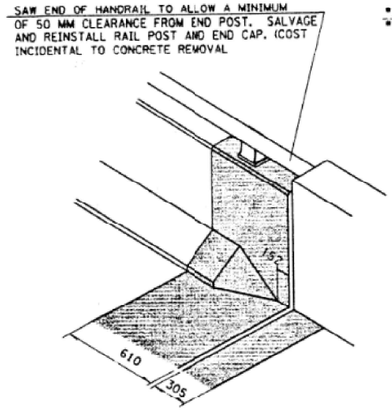

TYPICAL CONCRETE REPLACEMENT AT EACH ABUTMENT

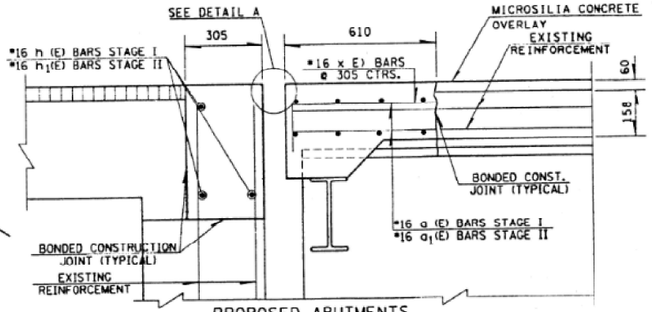

PROPOSED ABUTMENTS
(SECTION A-A)

REVISIONS NAME	DATE

ILLINOIS DEPARTMENT OF TRANSPORTATION

EXPANSION JOINT DETAILS
SN 041-0075
LOCATION 3

DRAWN BY
CHECKED BY
DATE

MMO 12/10/98

FILE NAME: H:\PJ220060 - I-64\Microstation\041-0075_0076\041007S_0076-013-Existing Plans.dgn

OATES ASSOCIATES
www.oatesassociates.com
ILLINOIS DESIGN FIRM LICENSE NO.: 184.001115

USER NAME =	DESIGNED -	REVISED -
	CHECKED -	REVISED -
PLOT SCALE =	DRAWN -	REVISED -
PLOT DATE = 11/3/2022	CHECKED -	REVISED -

STATE OF ILLINOIS
DEPARTMENT OF TRANSPORTATION

EXISTING PLANS
SN 041-0075 (E.B.) & 041-0076 (W.B.)
SHEET 13 OF 24 SHEETS

F.A.I. RTE.	SECTION	COUNTY	TOTAL SHEETS	SHEET NO.
64	(41-6,41-6-1,41-7)RS-2,BSMART 2023	JEFFERSON	1052	369
		CONTRACT NO. 78604		
	ILLINOIS	FED. AID PROJECT		

1 2 3 4 5 6 7 8 9
10 11 12 13 14 15 16 17 18
19 20 21 22 23 24 25 26 27
28 29 30 31 32 33 34 35 36
37 38 39 40 41 42 43 44 45
46 47 48 49 50 51 52 53 54
55 56 57 58 59 60 61 62 63
MMO 12/10/98
\946780\d00298pa.dgn
MMO REV: 10-27-98
EJ76

FAI RTE.	SECTION	COUNTY	TOTAL SHEETS	SHEET NO.
64	*	JEFFERSON	58	24

* D-7 BRIDGE DECK REPAIR 1999-1

BAR LIST - EACH ABUTMENT

BAR	NUMBER OF BARS STAGE I	NUMBER OF BARS STAGE II	TOTAL	SIZE	LENGTH METERS	SHAPE
a(E)	8	-	8	#16	5.691	
a1(E)	-	8	8	#16	6.910	
d(E)	2	2	4	#16	1.041	
d1(E)	2	2	4	#13	1.422	
d2(E)	2	2	4	#13	0.635	
h(E)	3	-	3	#16	5.158	
h1(E)	-	3	3	#16	6.377	
x(E)	18	22	40	#16	0.838	

BILL OF MATERIALS - BOTH ABUTMENTS

ITEM	UNIT	STAGE I	STAGE II	TOTAL
CONCRETE REMOVAL	CU MTR	4.9	5.6	10.5
PREFORMED JOINT SEAL, 64MM	METER	5.5	6.7	12.2
PREFORMED JOINT SEAL, 102MM	METER	5.5	6.7	12.2
CONCRETE SUPERSTRUCTURE	CU MTR	4.7	5.8	10.5
F & E STRUCTURAL STEEL	L SUM	1075	1345	2420
REINFORCEMENT BARS (EPOXY COATED)	KG	260	300	560
BAR SPLICERS (EPOXY COATED)	EACH	22	-	22

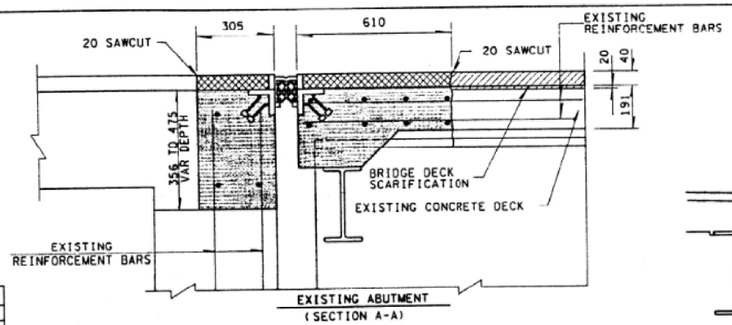

NOTE: EXISTING REINFORCEMENT BARS SHALL BE CLEANED, STRAIGHTENED AND INCORPORATED INTO THE NEW CONCRETE

CONCRETE REMOVAL

BITUMINOUS CONCRETE REMOVAL

BITUMINOUS CONCRETE REMOVAL TO BE PAID FOR AS CONCRETE REMOVAL

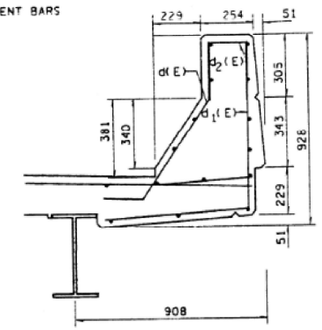

PARAPET DETAIL

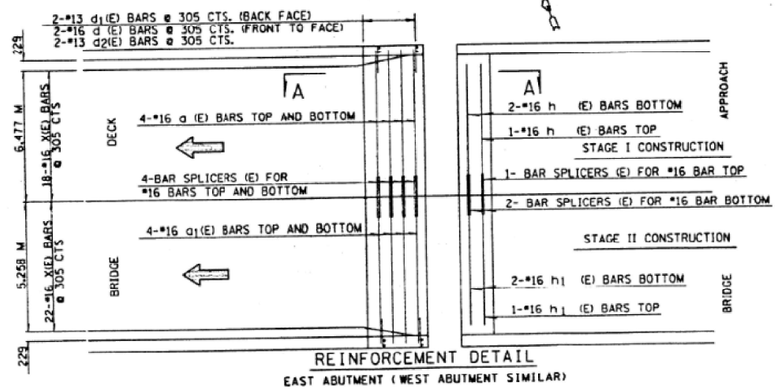

REINFORCEMENT DETAIL
EAST ABUTMENT (WEST ABUTMENT SIMILAR)

MMO 12/10/98

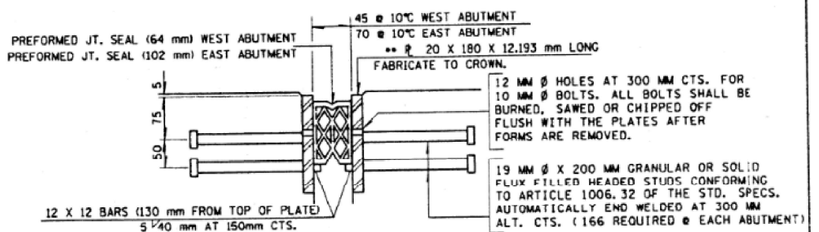

** FURNISH IN SEGMENTS OF 6 M MAXIMUM LENGTH MAXIMUM SPACE BETWEEN INSTALLED SEGMENTS SHALL BE 5 MM. SEAL SPACE WITH SILICONE SEALANT SUITABLE FOR STRUCTURAL STEEL.

DETAIL A

SAW END OF HANDRAIL TO ALLOW A MINIMUM OF 50 MM CLEARANCE FROM END POST. SALVAGE AND REINSTALL RAIL POST AND END CAP. (COST INCIDENTAL TO CONCRETE REMOVAL

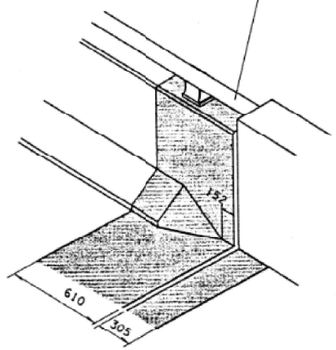

TYPICAL CONCRETE REPLACEMENT AT EACH ABUTMENT

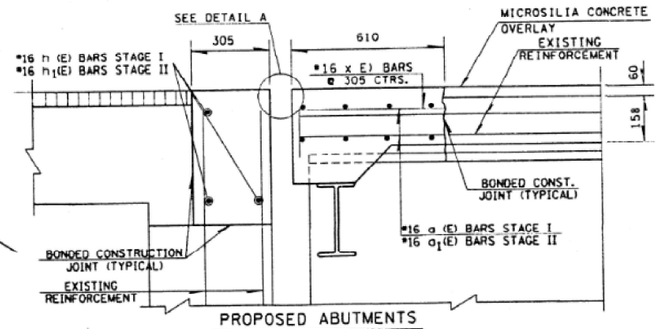

PROPOSED ABUTMENTS

(SECTION A-A)

REVISIONS NAME	DATE

ILLINOIS DEPARTMENT OF TRANSPORTATION

EXPANSION JOINT DETAILS

SN 041-0076

LOCATION 3

DRAWN BY

CHECKED BY

DATE

FILE NAME: H:\P220060 - I-64\Microstation\041-0075_0076\0410075_0076-014-Existing Plans.dgn

OATES ASSOCIATES
www.oatesassociates.com
ILLINOIS DESIGN FIRM LICENSE NO.: 184.001115

USER NAME =		DESIGNED -	REVISED -
		CHECKED -	REVISED -
PLOT SCALE =		DRAWN -	REVISED -
PLOT DATE =	11/3/2022	CHECKED -	REVISED -

STATE OF ILLINOIS
DEPARTMENT OF TRANSPORTATION

EXISTING PLANS
SN 041-0075 (E.B.) & 041-0076 (W.B.)

SHEET 14 OF 24 SHEETS

F.A.I. RTE.	SECTION	COUNTY	TOTAL SHEETS	SHEET NO.
64	(41-6,41-6-1,41-7)RS-2,BSMART 2023	JEFFERSON	1052	370
		CONTRACT NO. 78604		
	ILLINOIS FED. AID PROJECT			

FAI RTE.	SECTION	COUNTY	TOTAL SHEETS	SHEET NO.
64	•	JEFFERSON	58	25
FED. ROAD DIST. NO. 7	ILLINOIS	FED. AID PROJECT NO.		

• D-7 BRIDGE DECK REPAIR 1999-1

STATE OF ILLINOIS
DEPARTMENT OF TRANSPORTATION

GIRDER REACTIONS

RP	(KN)	99.2
RA	(KN)	162.8
TMP.	(KN)	46.7
R (TOTAL)	(KN)	308.7

NOTES: DIAPHRAGM REMOVAL AND REPLACEMENT MAY BE REQUIRED TO FACILITATE DRILLING HOLES. COST SHALL BE INCLUDED IN THE COST OF "FURNISHING AND ERECTING STRUCTURAL STEEL".
NEW STEEL EXTENSIONS, SIDE RETAINERS, SHIM ℄'S, CONNECTION BOLTS, AND ANCHOR BOLTS ARE INCLUDED IN "FURNISHING AND ERECTING STRUCTURAL STEEL".
SEE "ANCHOR BOLT DETAILS" SHEET FOR ANCHOR BOLT INSTALLATION.
PRIOR TO ORDERING ANY MATERIAL, THE CONTRACTOR SHALL VERIFY IN THE FIELD ALL BEARING HEIGHT AND SHIM THICKNESS DIMENSIONS.
MIN. JACK CAPACITY = 27.2 METRIC TONS.

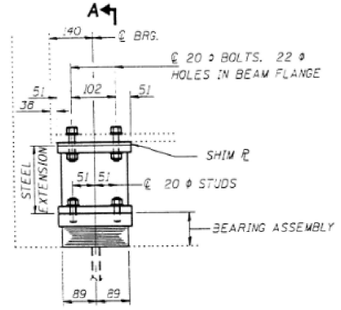

ELEVATION AT WEST ABUTMENT

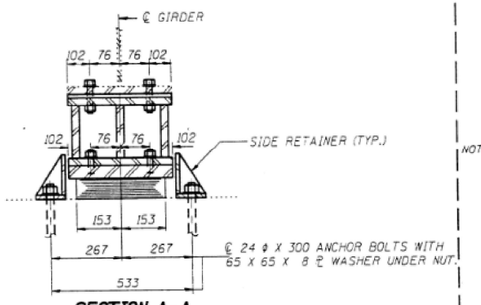

SECTION A-A

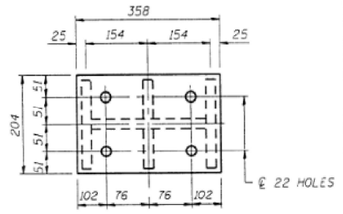

PLAN TOP AND BOTTOM PLATE

TYPE I ELASTOMERIC EXP. BRG.

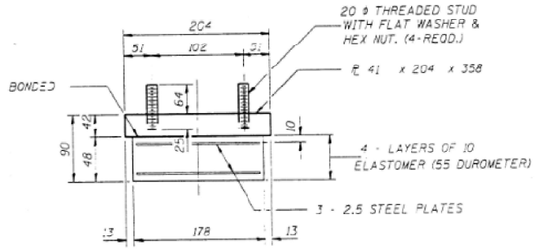

BEARING ASSEMBLY

NOTE: SHIM PLATES SHALL NOT BE PLACED UNDER BEARING ASSEMBLY.

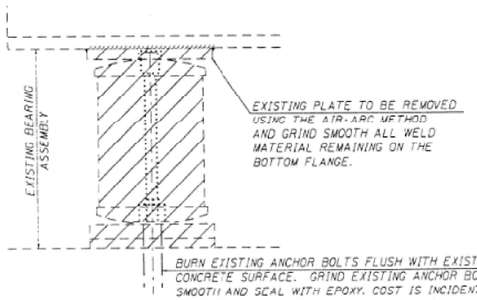

EXISTING BEARING REMOVAL DETAIL

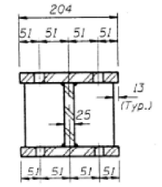

SECTION B-B

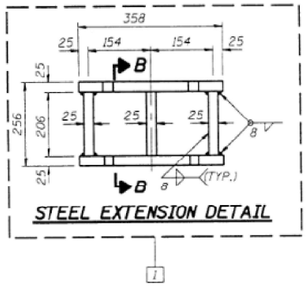

STEEL EXTENSION DETAIL

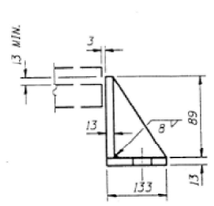

SIDE RETAINER

EQUIVALENT ROLLED ANGLE WITH STIFFENERS WILL BE ALLOWED IN LIEU OF WELDED PLATES.

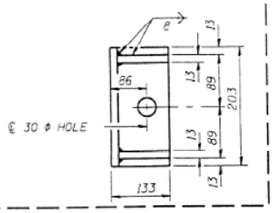

NOTE:
ALL DIMENSIONS ARE IN MM UNLESS OTHERWISE NOTED

BILL OF MATERIAL

ITEM	UNIT	TOTAL
ELASTOMERIC BEARING ASSEMBLY TYPE I	Each	12

ESTIMATED WEIGHT OF STRUCTURAL STEEL PER BEARING - 77 KG

REVISIONS NAME	DATE

ILLINOIS DEPARTMENT OF TRANSPORTATION
ELASTOMERIC BEARING DETAILS
WEST ABUTMENT
SN 041-0075 & 041-0076
LOCATION 3
DRAWN BY
DATE CHECKED BY

DESIGNED	
CHECKED	
DRAWN	
CHECKED	

EXAMINED 19
ENGINEER OF STRUCTURAL SERVICES
PASSED
ENGINEER OF BRIDGES AND STRUCTURES

TYI/REPS 8-03-98

1 As Revised 4-16-99 VHV

BIG MUDDY RIVER

•DATE•

c:\projects\jfs00004\94678eb.dgn Apr. 16, 1999 09:45:25

FILE NAME: H:\P\220060 - I-64\Microstation\041-0075_0076\041007S_0076-015-Existing Plans.dgn

OATES ASSOCIATES
www.oatesassociates.com
ILLINOIS DESIGN FIRM LICENSE NO.: 184.001115

USER NAME =		DESIGNED -	REVISED -
		CHECKED -	REVISED -
PLOT SCALE =		DRAWN -	REVISED -
PLOT DATE =	11/3/2022	CHECKED -	REVISED -

STATE OF ILLINOIS
DEPARTMENT OF TRANSPORTATION

EXISTING PLANS
SN 041-0075 (E.B.) & 041-0076 (W.B.)
SHEET 15 OF 24 SHEETS

F.A.I. RTE.	SECTION	COUNTY	TOTAL SHEETS	SHEET NO.
64	(41-6,41-6-1,41-7)RS-2,BSMART 2023	JEFFERSON	1052	371
		CONTRACT NO. 78604		
	ILLINOIS	FED. AID PROJECT		

FAI RTE.	SECTION	COUNTY	TOTAL SHEETS	SHEET NO.
64	*	JEFFERSON	58	26
FED. ROAD DIST. NO. 7	ILLINOIS	FED. AID PROJECT NO.		

* D-7 BRIDGE DECK REPAIR 1999-1

STATE OF ILLINOIS
DEPARTMENT OF TRANSPORTATION

1 2 3 4 5 6 7 8 9 $$DATE$$
10 11 12 13 14 15 16 17 18 *DGN-SPEC*
19 20 21 22 23 24 25 26 27 MMO REV: 09-01-98
28 29 30 31 32 33 34 35 36
37 38 39 40 41 42 43 44 45
46 47 48 49 50 51 52 53 54
55 56 57 58 59 60 61 62 63 EB275

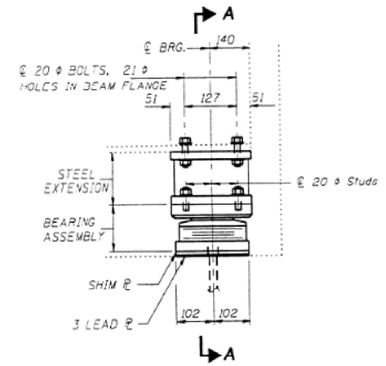

ELEVATION AT EAST ABUTMENT

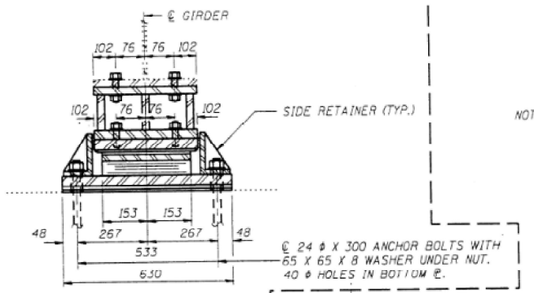

SECTION A-A

TYPE II TFE ELASTOMERIC EXP. BRG.

GIRDER REACTIONS

R℄	(KN)	98.7
R℄	(KN)	162.3
IMP.	(KN)	46.7
R (TOTAL)	(KN)	308.5

NOTES: DIAPHRAGM REMOVAL AND REPLACEMENT MAY BE REQUIRED TO FACILITATE DRILLING HOLES. COST SHALL BE INCLUDED IN THE COST OF "FURNISHING AND ERECTING STRUCTURAL STEEL".
NEW STEEL EXTENSIONS, SIDE RETAINERS, SHIM ℄'S, CONNECTION BOLTS, ANCHOR BOLTS AND LEAD PLATES ARE INCLUDED IN "FURNISHING AND ERECTING STRUCTURAL STEEL".
SEE "ANCHOR BOLT DETAIL" SHEET FOR ANCHOR BOLT INSTALLATION.
PRIOR TO ORDERING ANY MATERIAL, THE CONTRACTOR SHALL VERIFY IN THE FIELD ALL BEARING HEIGHT AND SHIM THICKNESS DIMENSIONS.
MIN. JACK CAPACITY = 27.2 M TONS.

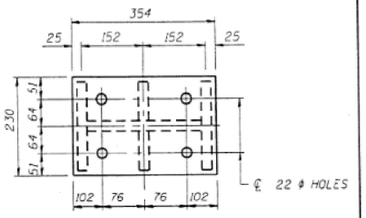

PLAN TOP AND BOTTOM PLATE

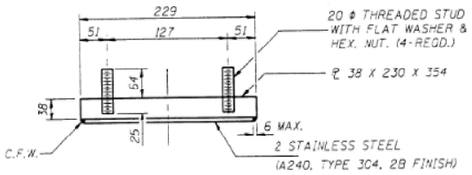

TOP BEARING ASSEMBLY

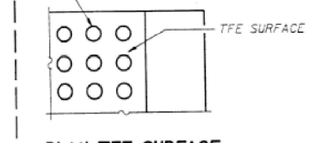

PLAN-TFE SURFACE

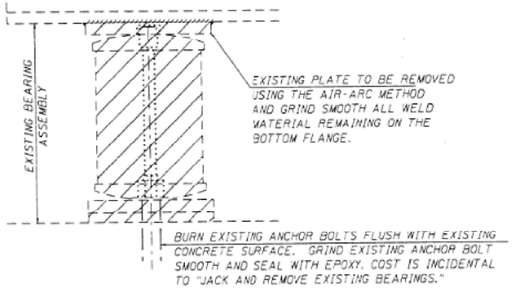

EXISTING BEARING REMOVAL DETAIL

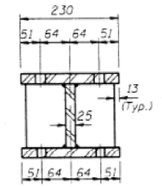

SECTION B-B

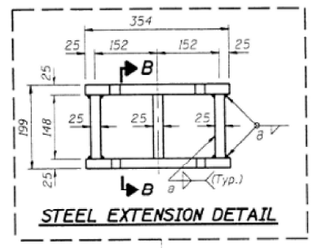

STEEL EXTENSION DETAIL

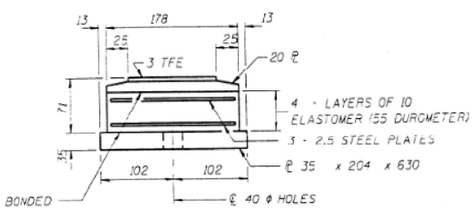

TOP BEARING ASSEMBLY

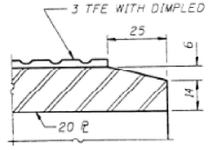

SECTION THRU TFE

NOTE: THE 3 TFE SHEET SHALL BE BONDED DIRECTLY TO THE TOP STEEL PLATE WITH A TWO-COMPONENT, MEDIUM VISCOSITY EPOXY RESIN, CONFORMING TO THE REQUIREMENTS OF THE FEDERAL SPECIFICATION MMM-A-134, TYPE I. THE BOND AGENT SHALL BE APPLIED ON THE FULL AREA OF THE CONTACT SURFACES.

BONDING OF 3 TFE SHEET DURING VULCANIZING PROCESS WILL BE PERMITTED PROVIDED THE PROCESS AND METHOD OF ADJUSTING ASSEMBLY HEIGHT IS APPROVED BY THE ENGINEER.

NOTE:

ALL DIMENSIONS ARE IN MM UNLESS OTHERWISE NOTED

BOTTOM BEARING ASSEMBLY

1

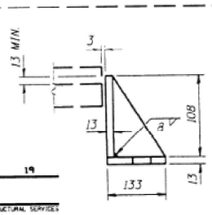

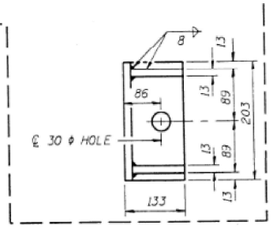

SIDE RETAINER

EQUIVALENT ROLLED ANGLE WITH STIFFENERS WILL BE ALLOWED IN LIEU OF WELDED PLATES.

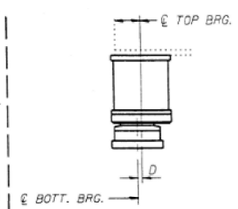

BELOW 50°F.
(MOVE BOTT. BRG. AWAY FROM FIXED BRG.)

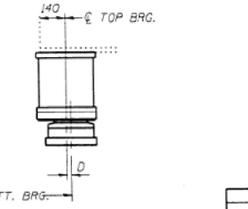

ABOVE 50°F.
(MOVE BOTT. BRG. TOWARD FIXED BRG.)

SETTING ANCHOR BOLTS AT EXP. BRG.

D=3 PER EACH 100° OF EXPANSION FOR EVERY 15° TEMP. CHANGE FROM THE NORMAL TEMP. OF 50°F.

BILL OF MATERIAL

ITEM	UNIT	TOTAL
ELASTOMERIC BEARING ASSEMBLY TYPE II	EACH	12

ESTIMATED WEIGHT OF STRUCTURAL STEEL PER BEARING - 75 KG

DESIGNED	
CHECKED	
DRAWN	
CHECKED	

TYII/REPS 8-03-98

EXAMINED 19
ENGINEER OF STRUCTURAL SERVICES
PASSED
ENGINEER OF BRIDGES AND STRUCTURES

REVISIONS NAME	DATE

ILLINOIS DEPARTMENT OF TRANSPORTATION
ELASTOMERIC BEARING DETAILS
EAST ABUTMENT
SN 041-0075 & 041-0076
LOCATION 3
DRAWN BY
DATE CHECKED BY

BIG MUDDY RIVER

1 As Revised 4-16-99 VHV

•DATE•

c:\projects\jfs00004\94678eb.dgn Apr. 16, 1999 09:45:37

FILE NAME: H:\P220060 - I-64\Microstation\041-0075_0076\041_0075_0076-016-Existing Plans.dgn

OATES ASSOCIATES
www.oatesassociates.com
ILLINOIS DESIGN FIRM LICENSE NO.: 184.001115

USER NAME =		DESIGNED -	REVISED -
		CHECKED -	REVISED -
PLOT SCALE =		DRAWN -	REVISED -
PLOT DATE =	11/3/2022	CHECKED -	REVISED -

STATE OF ILLINOIS
DEPARTMENT OF TRANSPORTATION

EXISTING PLANS
SN 041-0075 (E.B.) & 041-0076 (W.B.)
SHEET 16 OF 24 SHEETS

F.A.I. RTE.	SECTION	COUNTY	TOTAL SHEETS	SHEET NO.
64	(41-6,41-6-1,41-7)RS-2,BSMART 2023	JEFFERSON	1052	372
		CONTRACT NO. 78604		
	ILLINOIS	FED. AID PROJECT		

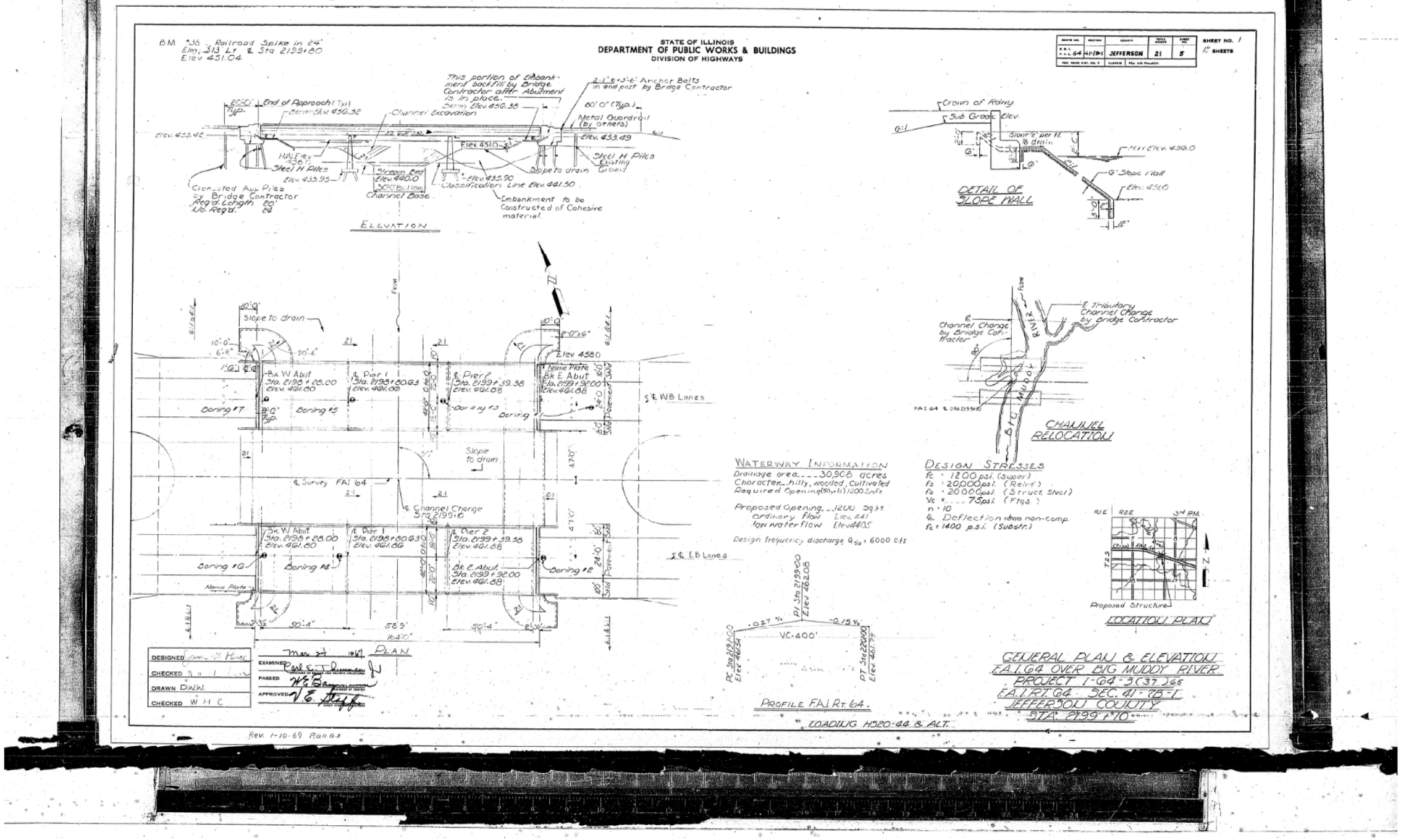

FILE NAME: H:\P\220060 - I-64\Microstation\041-0075_0076\0410075_0076-017-Existing Plans.dgn

OATES ASSOCIATES www.oatesassociates.com ILLINOIS DESIGN FIRM LICENSE NO.: 184.001115	USER NAME =	DESIGNED -	REVISED -	STATE OF ILLINOIS DEPARTMENT OF TRANSPORTATION	EXISTING PLANS SN 041-0075 (E.B.) & 041-0076 (W.B.)	F.A.I. RTE.	SECTION	COUNTY	TOTAL SHEETS	SHEET NO.
		CHECKED -	REVISED -			64	(41-6,41-6-1,41-7)RS-2,BSMART 2023	JEFFERSON	1052	373
	PLOT SCALE =	DRAWN -	REVISED -					CONTRACT NO. 78604		
	PLOT DATE = 11/3/2022	CHECKED -	REVISED -		SHEET 17 OF 24 SHEETS			ILLINOIS	FED. AID PROJECT	

STATE OF ILLINOIS
DEPARTMENT OF PUBLIC WORKS & BUILDINGS
DIVISION OF HIGHWAYS

				SHEET NO. 7
A.A.	41-7B-1	JEFFERSON	31	12 SHEETS

Note
Bars indicated thus 20 x 3 - #5 etc. indicates 20 lines of bars with 3 lengths per line
Min bar laps = 24 dia

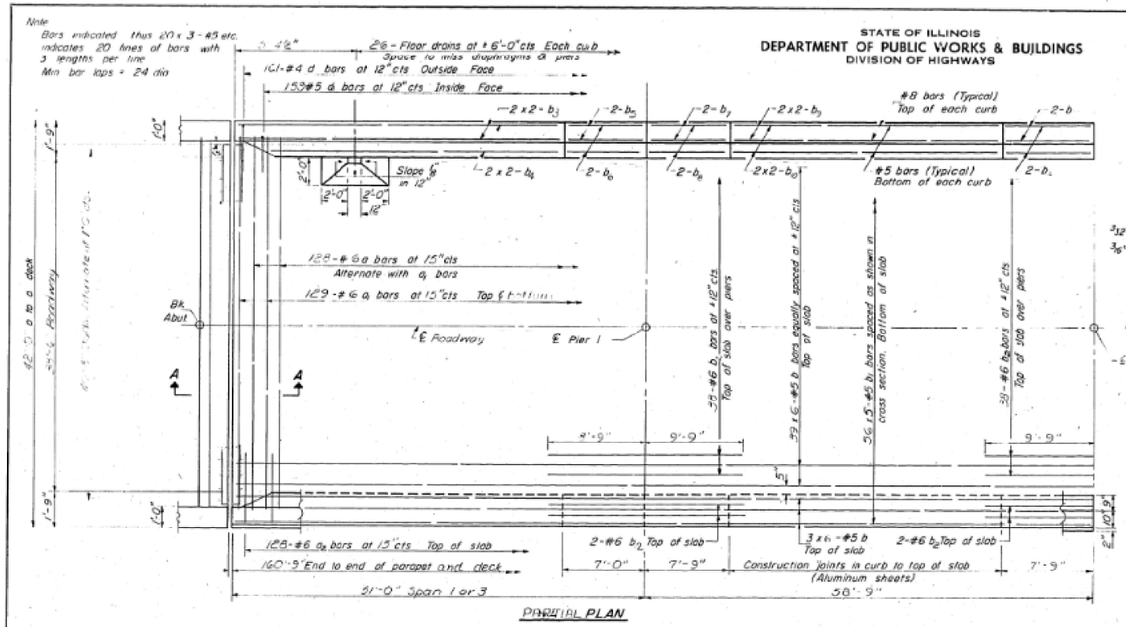

PARTIAL PLAN

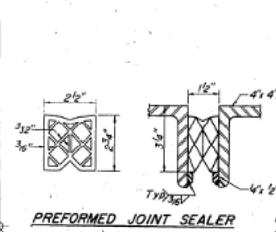

SECTION A-A

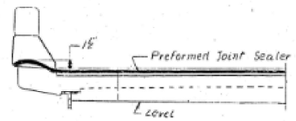

END SECTION

TWO BRIDGES
BILL OF MATERIAL

Bar	No	Size	Length	Shape
a	256	#6	42'-4"	
a1	516	#6	40'-6"	
a2	512	#6	4'-0"	
b	540	#5	28'-0"	
b1	360	#5	39'-3"	
b2	168	#6	18'-6"	
b3	32	#8	23'-0"	
b4	92	#5	22'-9"	
b5	16	#8	6'-9"	
b6	16	#5	6'-9"	
b7	16	#8	7'-6"	
b8	16	#5	7'-6"	
b9	16	#8	22'-6"	
b10	16	#5	22'-3"	
d	648	#4	4'-8"	⌋
d1	636	#5	9'-5"	⌋
Reinforcement Bars			Lbs.	33,780
* Structural Steel			L. Sum	1
Class X Concrete			Cu Yds	373.2
Preformed Jt Sealer			Lin ft	168

* Weight of bearing assemblies with lead plates and anchor bolts are included as structural steel.
Est Wt. = 13000 Lbs.
Parapet reinforcement and Class X Concrete are billed on Sheet # 7

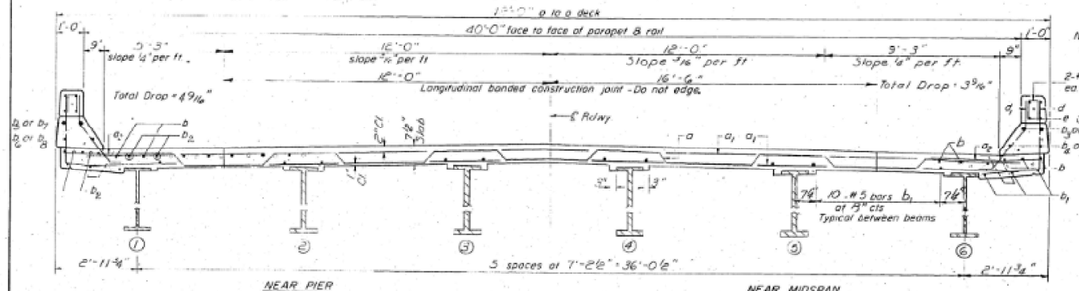

NEAR PIER NEAR MIDSPAN

CROSS SECTION
(LOOKING WEST WEST BOUND LANES)
(LOOKING EAST EAST BOUND LANES)

Note: For placement of bars d2 & e thru e3 see sheet # 7

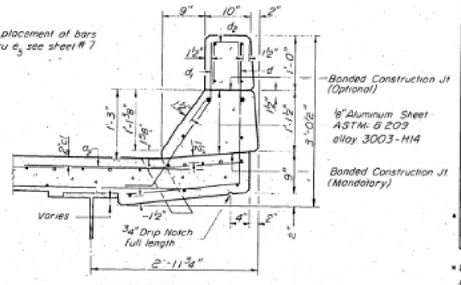

CURB SECTION
Cost of Aluminum Drains and Sheets shall be incidental to Class X Concrete

DESIGNED	JAMES N. PENCE
CHECKED	WEN M. CHEN
DRAWN	Bev Robinson
CHECKED	W M C

19
EXAMINED
PASSED
APPROVED

I-4106-0 3-1-68

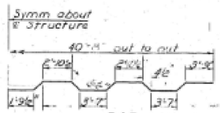

BAR a



BAR d

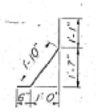

BAR d1

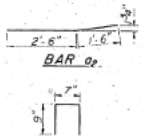

BAR d2

Aluminum Sheets Welded ASTM: B 209 alloy 6061-T6 or Aluminum Extrusions ASTM: B 221 alloy 6061-T6

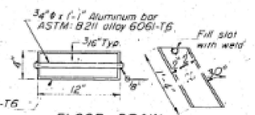

FLOOR DRAIN

SUPERSTRUCTURE
F.A.I. RT. 64 SEC. 41-7B-1
JEFFERSON COUNTY
STA. 2199+10

Rev. G.K.

FILE NAME: H:\P220060 - I-64\Microstation\041-0075_0076\041075_0076-018-Existing Plans.dgn

OATES ASSOCIATES www.oatesassociates.com ILLINOIS DESIGN FIRM LICENSE NO.: 184.001115	USER NAME =	DESIGNED -	REVISED -
		CHECKED -	REVISED -
	PLOT SCALE =	DRAWN -	REVISED -
	PLOT DATE = 11/3/2022	CHECKED -	REVISED -

STATE OF ILLINOIS
DEPARTMENT OF TRANSPORTATION

EXISTING PLANS
SN 041-0075 (E.B.) & 041-0076 (W.B.)
SHEET 18 OF 24 SHEETS

F.A.I. RTE.	SECTION	COUNTY	TOTAL SHEETS	SHEET NO.
64	(41-6,41-6-1,41-7)RS-2,BSMART 2023	JEFFERSON	1052	374
		CONTRACT NO. 78604		
		ILLINOIS	FED. AID PROJECT	

STATE OF ILLINOIS
DEPARTMENT OF PUBLIC WORKS & BUILDINGS
DIVISION OF HIGHWAYS

ROUTE NO.	SECTION	COUNTY	TOTAL SHEETS	SHEET NO.
F.A.I. 64	41-7B-1	JEFFERSON	21	11
FED. ROAD DIST. NO. 7	ILLINOIS	FED. AID PROJECT		

SHEET NO. 11 OF 21 SHEETS

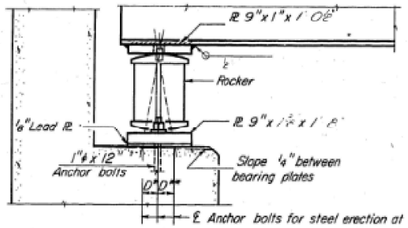

SECTION

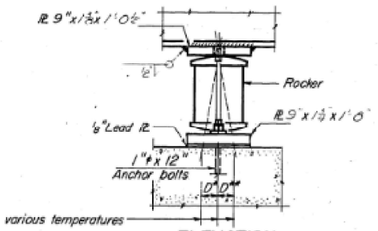

ELEVATION

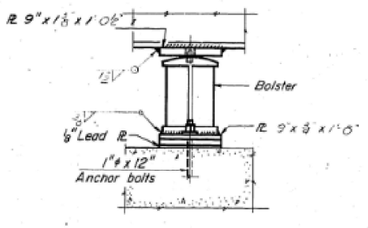

ELEVATION

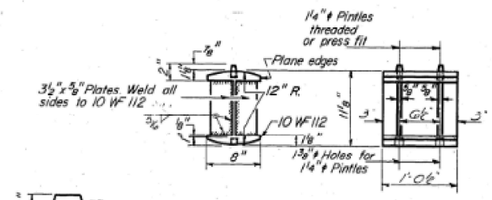

ROCKER

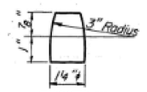

PINTLE

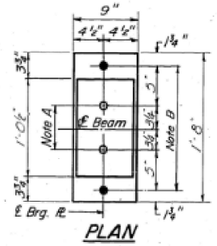

PLAN

AT ABUTMENT

NOTE A
1⅜"ϕ Holes – 1" deep in top R. for pintles. Thread or press fit pintles into bottom R.

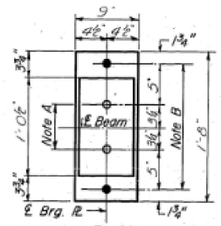

PLAN

AT PIER ℄

NOTE B
1½"ϕ Holes for 1"ϕ anchor bolts. 2'9"x2½"x⅜" R. Washers under nut.

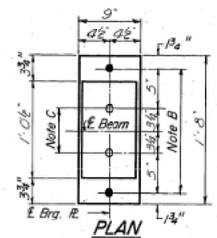

PLAN

AT PIER 1

NOTE C
1⅜"ϕ Holes 1" deep in top R. only for 1¼"ϕ pintles.

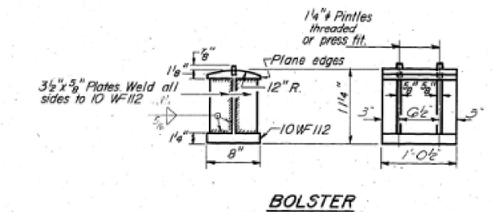

BOLSTER

BEARING ASSEMBLY DETAILS

NOTES ON SETTING OF ANCHOR BOLTS AT EXP. BRGS.

a) D* (Side of brg. away from fixed brg.)
D* = ⅛" per each 100' of expansion for every 15° fall below the normal temp. of 50°F.
D** (Side of brg. toward fixed brg.)
D** = ⅛" per each 100' of expansion for every 15° rise above the normal temp. of 50°F.

b) After beams have been erected and dimensions D* or D** determined, holes shall be drilled and anchor bolts shall be grouted in place. All fixed anchor bolts shall be built into the masonry.

TABLE OF MOMENTS & REACTIONS (INTERIOR BEAMS)

	Moments			Reactions	
	Sp. 1	Pier 1	Sp. 2	Abut.	Pier 1
D.L.	815	348	156	22.6	70.4
L.L.	332	259	318	36.6	44.2
Imp.	94	72	86	—	—
Total	641	679	560	39.0	118.6

Moments are in Ft.-Kips
Reactions are in Kips

DESIGNED	Francis H. Turner	EXAMINED	March 1st 1967
CHECKED	W. H. Turner	PASSED	W. E. Baumann
DRAWN	P.G. Barnett	APPROVED	V. E. Hoff
CHECKED	W. H. C.		

I-2-B 9-1-65

BEARING DETAILS
(A.I.P.T. 64 - SEC. 41-7B-1
JEFFERSON COUNTY
STA. 2199 + 10

FILE NAME: H:\P220060 - I-64\Microstation\041-0075_0076\041_0075_0076-019-Existing Plans.dgn

OATES ASSOCIATES
www.oatesassociates.com
ILLINOIS DESIGN FIRM LICENSE NO.: 184.001115

USER NAME =	DESIGNED -	REVISED -
	CHECKED -	REVISED -
PLOT SCALE =	DRAWN -	REVISED -
PLOT DATE = 11/3/2022	CHECKED -	REVISED -

STATE OF ILLINOIS
DEPARTMENT OF TRANSPORTATION

EXISTING PLANS
SN 041-0075 (E.B.) & 041-0076 (W.B.)
SHEET 19 OF 24 SHEETS

F.A.I. RTE.	SECTION	COUNTY	TOTAL SHEETS	SHEET NO.
64	(41-6,41-6-1,41-7)RS-2,BSMART 2023	JEFFERSON	1052	375
		CONTRACT NO. 78604		
	ILLINOIS	FED. AID PROJECT		

STATE OF ILLINOIS
DEPARTMENT OF PUBLIC WORKS & BUILDINGS
DIVISION OF HIGHWAYS

	64	41-7B-1	JEFFERSON	21	12

SHEET NO. 7
12 SHEETS

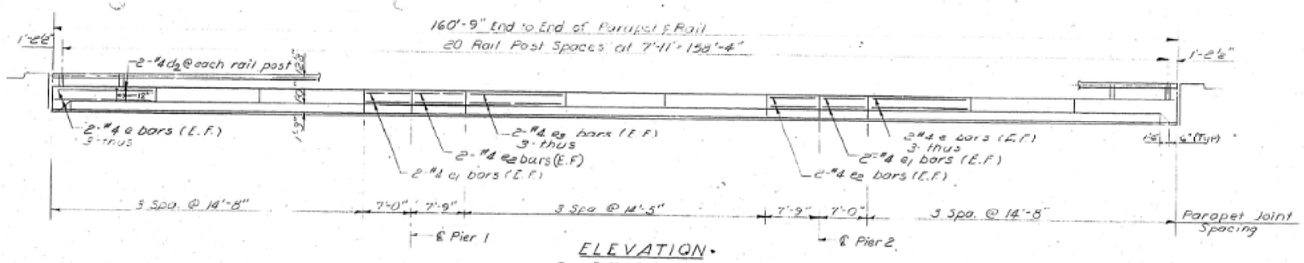

ELEVATION.
Typ. Both Bridges

Note:- For details of d1 bar see Sheet # 3

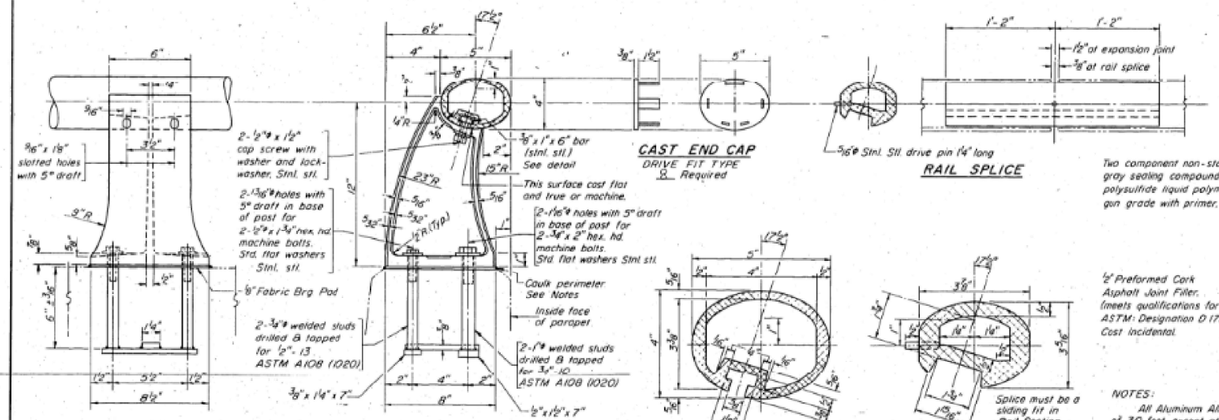

RAIL POST DETAILS

CAST END CAP
DRIVE FIT TYPE
℄ Required

5/16"ø Stnl. Stl drive pin (4" long

RAIL SPLICE

5"
17½°
½"
4"
⅜"
4"
½"
⅜"
⅜"
⅜

STATE OF ILLINOIS
DEPARTMENT OF PUBLIC WORKS & BUILDINGS
DIVISION OF HIGHWAYS

ROUTE NO.	SECTION	COUNTY	TOTAL SHEETS	SHEET NO.
F.A.I. 64	41-7B-1	JEFFERSON	21	13

SHEET NO. 13 OF 21 SHEETS

WING WALL ELEVATION

1"ø Anchor Bolts cast to be incidental to Bridge Structure.

Parallel to Grade

Construction Joint

Elev. 459.92 N. Abut.
Elev. 459.99 E. Abut.

Elev. 464.93 N. Abut.
Elev. 465.01 E. Abut.

41-#6-V4 bars at 12" ctrs. Back Face

3-#6 h1 bars (1 P.T. 2 E.B.F.)

E. Roadway of Back of Abut.
Cr. Elev. 461.80 N. Abut.
Cr. Elev. 461.89 E. Abut.

Elev. 463.00 N. Abut.
Elev. 463.09 E. Abut.

Space reinforcement in cap to miss anchor bolts.

Pour steps monolithically with cap.

1'-2" - N. Abut.
1'-2½" - E. Abut.

N. Abut. - 1'-3"
E. Abut. 1'-3½"

41-#4-V bars at 12" ctrs. (Eq. Face)

El. 457.07 W.A.
El. 457.14 E.A.

El. 457.18 W.A.
El. 457.25 E.A.

El. 457.23 W.A.
El. 457.32 E.A.

El. 457.13 W.A.
El. 457.20 E.A.

El. 457.00 W.A.
El. 457.07 E.A.

3-#4 bars s

4-#6 u

4-#5 h2 bars at 12" ctrs. (Eq. Face)

2-#7 bars p See Sec. Thru Abut.

Hatched area to be poured after superstructure falsework has been removed.

Elev. 453.92 N.A.
Elev. 453.99 E.A.

5-#4 s Typical betwn. piles

Typical Encasement for all piles. For Sec. C-C see Sheet 9.

ELEVATION

E. Roadway

Sta. 2198+28.00 N. Abut.
Sta. 2199+92.00 E. Abut.

Back of Abutment

Optional Const. Jt.

W.P.

7'-3" 7'-3" 2'-0" 5'-3" 7'-3"
20'-0½" 16'-0½"
5 Bearing Spaces at 7'-2½" = 36'-0½"
23'-0" 19'-0"
42'-0"

TOP VIEW

PILE DATA
Type Steel (B.B.P.3G)
Est'd. Length
N. Abut. 45'
E. Abut. 45'
No. Req'd.
N. Abut. 11
E. Abut. 11

E. Roadway
47'-0" From E. Rdwy. to E. Survey
15'-0"
Back of Abutment
E. Vertical Piles
E. Battered Piles

21'-9" 17'-9"
22'-0"
21'-0" 17'-0"
2'-0"
8 Alt. Pile Spaces at 4'-9" = 38'-0"
23'-0" 19'-0"

PLAN - PILE CAP

WING WALL ELEVATION

#4 bars at 12" cts. (Eq. Face)
#5 bars at 12" cts.
#4 bars at 12" cts. (Eq. Face)
1-#4h3 (Eq. Face)
5-#7 p1 (Eq. Face)
#4 s1 at 12" cts.
E. Pile

WING WALL ELEVATION
Reinforcement

W.P.
h3, h4, or h5
11'-0"

SEC. B-B

BAR V4

BARs B s1

BAR n

BAR u

BAR h2

TWO ABUTMENTS
BILL OF MATERIAL

Bar	No.	Size	Length	Shape
h1	32	#3	20'-0"	
h1	6	#6	59'-9"	
h2	36	#5	6'-6"	
h3	6	#4	3'-9"	
h4	6	#4	7'-3"	
h5	66	#4	11'-3"	
n	40	#8	7'-9"	
p	32	#7	22'-6"	
p1	62	#7	11'-6"	
s	32	#8	14'-11"	
s1	66	#4	9'-3"	
u	10	#6	10'-10"	
v	166	#4	6'-0"	
v1	32	#4	7'-9"	
v2	32	#4	7'-0"	
v3	32	#4	6'-6"	
V4	62	#4	3'-9"	
Class X Concrete			Cu. Yds.	356.2
Reinforcement Bars			Lbs.	69990
Steel Piles (B.B.P.3G)			Lin. Ft.	1034
Name Plates			Ea.	2

WEST ABUTMENT EAST BD. LANES
EAST ABUTMENT WEST BD. LANES
F.A.I. RT. 64 SEC. 41-7B-1
JEFFERSON COUNTY
STA. 2199+10

ANCHOR BOLT

Galvanized Lockwd and Washer
Nut
3'-6"
Threads
Galvanized
8"
¾"ø

1"ø ANCHOR BOLT

VIEW C-C

Ridge Face
4"
E. Brg.
Back of Abut.
Slope ¼" between brgs.
Const. Jt.
2" Chamfer
Batter 2" per ft.

SEC. A-A

SEC. THRU ABUT.

Using H.A.S.S. Program

DESIGNED Lumb, Ill. Univ.
CHECKED W. H. C.
DRAWN S.G. Ferchow
CHECKED W. H. C.

Mar 24 1967
EXAMINED Paul E. Rinderspacher Jr.
PASSED W. E. Bayman
APPROVED V. E. Platt

A-9 2-1-66

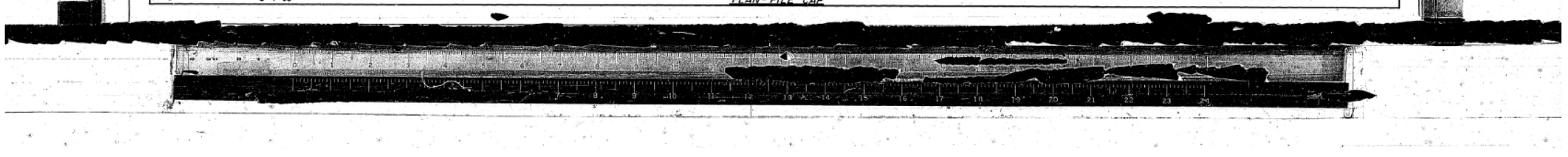

OATES ASSOCIATES www.oatesassociates.com ILLINOIS DESIGN FIRM LICENSE NO.: 184.001115	USER NAME =	DESIGNED -	REVISED -	STATE OF ILLINOIS DEPARTMENT OF TRANSPORTATION
		CHECKED -	REVISED -	
	PLOT SCALE =	DRAWN -	REVISED -	
	PLOT DATE = 11/3/2022	CHECKED -	REVISED -	

EXISTING PLANS
SN 041-0075 (E.B.) & 041-0076 (W.B.)
SHEET 21 OF 24 SHEETS

F.A.I. RTE.	SECTION	COUNTY	TOTAL SHEETS	SHEET NO.
64	(41-6,41-6-1,41-7)RS-2,BSMART 2023	JEFFERSON	1052	377
		CONTRACT NO. 78604		
	ILLINOIS	FED. AID PROJECT		

FILE NAME: H:\P220060 - I-64\Microstation\041-0075_0076\041007S_0076-021-Existing Plans.dgn

STATE OF ILLINOIS
DEPARTMENT OF PUBLIC WORKS & BUILDINGS
DIVISION OF HIGHWAYS

ROUTE NO.	SECTION	COUNTY	TOTAL SHEETS	SHEET NO.
F.A.I. 64	41-7BH	JEFFERSON	91	14
FED. ROAD DIST. NO. 7	ILLINOIS	FED. AID PROJECT		

SHEET NO. 9
12 SHEETS

WING WALL ELEVATION

ELEVATION

WING WALL ELEVATION
Reinforcement

SEC. B-B

SEC. C-C

SEC. A-A

SEC. THRU ABUT.

BAR V4

BAR n

BAR u

BAR hg

BARS s & s1

TOP VIEW

PLAN-PILE CAP

PILE DATA
Type Steel (SBP3G)
Est. Length
W. Abut. 49'
E. Abut. 44'
Lic. Reqd.
W. Abut. 11
E. Abut. 10 + 1 test pile

DESIGNED Samuel M Powell
CHECKED W
DRAWN S.G. Ferchow Jacobs
CHECKED N H C

March 24 1967
EXAMINED Carl E. Baumann
PASSED W.E. Baumann
APPROVED V.E. Stoffel

A-9 2-1-66

71.10 ABUTMENTS
BILL OF MATERIAL

Bar	No.	Size	Length	Shape
n	36	#5	21'-6"	
h_1	6	#6	39'-9"	
h_2	32	#5	6'-6"	
h_3	6	#4	3'-6"	
h_4	6	#4	7'-3"	
h_5	64	#4	11'-3"	
n	48	#5	7'-9"	
p	12	#7	22'-6"	
p_1	64	#7	11'-6"	
s	92	#4	18'-11"	
s_1	44	#4	9'-3"	
u	16	#6	10'-10"	
v	164	#4	6'-0"	
v_1	32	#4	7'-9"	
v_2	32	#4	5'-0"	
v_3	32	#4	6'-6"	
Vd	82	#4	3'-9"	
Class X Concrete			Cu. Yds.	82.6
Reinforcement Bars			Lbs.	6990
"Steel Piles (SBP3G)"			Lin. Ft.	979
Test Piles 3@ (SBP3G)			Ea.	1

WEST ABUTMENT WEST BD. LANES
EAST ABUTMENT EAST BD. LANES
F.A.I. RT. 64 SEC. 41-7B-1
JEFFERSON COUNTY
STA. 2199 + 10

STATE OF ILLINOIS
DEPARTMENT OF PUBLIC WORKS & BUILDINGS
DIVISION OF HIGHWAYS

ROUTE NO.	SECTION	COUNTY	TOTAL SHEETS	SHEET NO.
F.A.I. 64	41-7B-1	JEFFERSON	21	16
FED. ROAD DIST. NO. 7	ILLINOIS	FED. AID PROJECT		

SHEET NO. 11
12 SHEETS

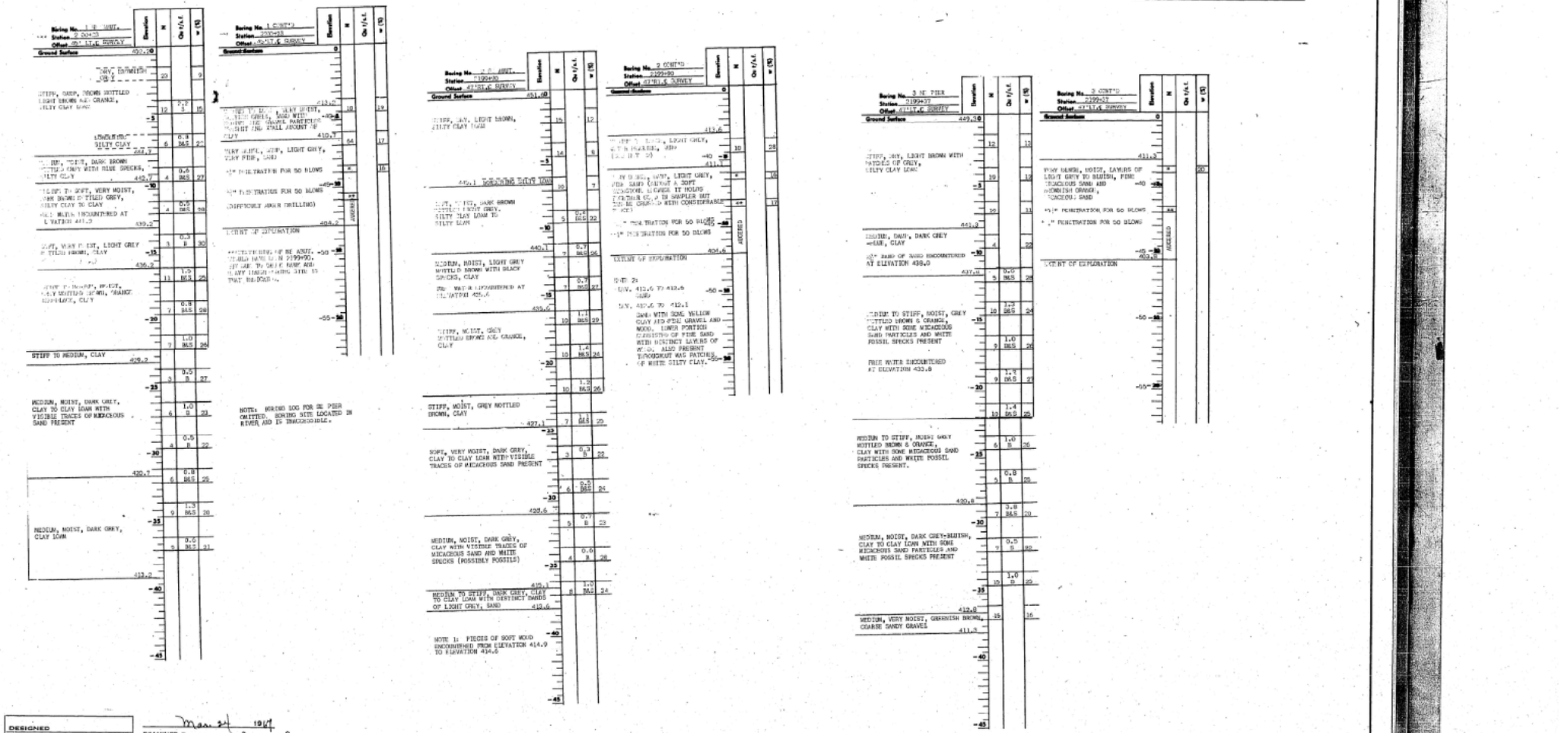

DESIGNED	
CHECKED	
DRAWN	jacobs
CHECKED	

EXAMINED Mar 24 1914
PASSED W. Baumann
APPROVED H. E. Hoffe

N- Standard Penetration Test- Blows per foot to drive 2" O.D. Split Spoon Sampler 12" with 140# hammer falling 30"

Qu-Unconfined Compressive Strength-t/sf
w- Water Content- percentage of oven dry weight-%

Type failure
B-Bulge Failure
S-Shear Failure
E-Estimated Value
P-Penetrometer

BORINGS
F.A.I. RT. 64 SEC. 41-7B-1
JEFFERSON COUNTY
STA. 2199+10

FILE NAME: H:\P\220060 - I-64\Microstation\041-0075_0076\04110075_0076-023-Existing Plans.dgn

OATES ASSOCIATES
www.oatesassociates.com
ILLINOIS DESIGN FIRM LICENSE NO.: 184.001115

USER NAME =	DESIGNED -	REVISED -	
	CHECKED -	REVISED -	
PLOT SCALE =	DRAWN -	REVISED -	
PLOT DATE = 11/3/2022	CHECKED -	REVISED -	

STATE OF ILLINOIS
DEPARTMENT OF TRANSPORTATION

EXISTING PLANS
SN 041-0075 (E.B.) & 041-0076 (W.B.)
SHEET 23 OF 24 SHEETS

F.A.I. RTE.	SECTION	COUNTY	TOTAL SHEETS	SHEET NO.
64	(41-6,41-6-1,41-7)RS-2,BSMART 2023	JEFFERSON	1052	379
		CONTRACT NO. 78604		
	ILLINOIS	FED. AID PROJECT		

STATE OF ILLINOIS
DEPARTMENT OF PUBLIC WORKS & BUILDINGS
DIVISION OF HIGHWAYS

ROUTE NO.	SECTION	COUNTY	TOTAL SHEETS	SHEET NO.
F.A.I. 64	41-7B-1	JEFFERSON	21	17

SHEET NO. 16 SHEETS

Bore No. 4 (CONT'D) Station 2198+81 Offset 47'11"E SURVEY

Elevation	N	Qu t/s.f.	w (%)
Ground Surface 0			
-40 410.3			
SOFT, VERY WET, LIGHT GREY/BLUISH GREY FINE TO MEDIUM GRAVELLY SILT, LOOSE CLAY AND CRUSHED LIMESTONE AS A BINDING MATERIAL			
408.3			
VERY DENSE, MOIST, LIGHT GREY, FINE SAND			
-50			
**24" PENETRATION FOR 50 BLOWS			
**24" PENETRATION FOR 50 BLOWS			
402.3			
EXTENT OF EXPLORATION			
-50			

Bore No. 5 H.W. PIER Station 2198+93 Offset 47'11"E SURVEY

Elevation	N	Qu t/s.f.	w (%)
Ground Surface 451.0			
STIFF TO MEDIUM, DRY, LIGHT BROWN, SILTY CLAY LOAM WITH SOME FINE MICACEOUS SAND PRESENT	13	0.9	9
BOREHOLE SILTY LOAM	7		11
-5			
PEDERI, DAMP, DARK BROWN MOTTLED GREY, SILTY LOAM WITH SOME FINE MICACEOUS SAND PRESENT	7	0.6 S	21
414.5			
SOFT, MOIST, DARK BROWN MOTTLED GREY, CLAY LOAM	4	0.3 BKS	26
-10 440.0			
SOFT, VERY MOIST, DARK GREY, CLAY TO CLAY LOAM WITH SOME FINE MICACEOUS SAND PRESENT	9		26
437.0			
SILTSTONE, MOIST, DARK BLUISH GREY CLAY, FREE WATER ENCOUNTERED AT ELEVATION 435.0	3	0.8 BKS	28
-15 435.0			
STIFF, MOIST, LIGHT GREY MOTTLED BROWN & ORANGE, CLAY	12	1.4 BKS	27
-20			
427.5	7	1.1 BKS	26
MEDIUM, MOIST, DARK BLUISH GREY MOTTLED DARK BROWN, CLAY WITH NOTICEABLE AMOUNT OF MICACEOUS SAND	3	0.8 BKS	28
-25			
425.5	7	1.0 BKS	25
439.5	5	0.6 BKS	25
-30			
MEDIUM TO SOFT, VERY MOIST, DARK BLUISH GREY, CLAY LOAM WITH CONSIDERABLE AMOUNT OF VISIBLE FINE MICACEOUS SAND	6	0.5 BKS	21
417.0	3		23
MEDIUM TO SOFT, VERY MOIST, DARK GREY, CLAY LOAM TO SANDY CLAY LOAM			
-35			
414.5	11		19
MEDIUM, WATER BEARING, BROWN & GREENISH, COARSE SAND AND FINE GRAVEL			
THE EARTH THE ROCK	22		16
-40			
402.5			
-45			

Bore No. 5 CONT'D Station 2199+03 Offset 47'11"E SURVEY

Elevation	N	Qu t/s.f.	w (%)
Ground Surface 0			
-40 409.5			
VERY DENSE, DAMP, FINE, LIGHT GREY, MICACEOUS SAND	146		18
* 3/4" PENETRATION FOR 50 BLOWS (AUGER DRILLING DIFFICULT)			17
-45			
EXTENT OF EXPLORATION 404.0			
-50			
-55			

Bore No. 6 S.W. PIER Station 2199+30 Offset 47'11"E SURVEY

Elevation	N	Qu t/s.f.	w (%)
Ground Surface 450.9			
VERY LOOSE TO SOFT, MOIST TO DAMP, LIGHT BROWN, SILTY CLAY LOAM	9	0.9 S	24
-5 445.9	4	0.5 S	16
VERY LOOSE OR SOFT, DAMP, LIGHT BROWN MOTTLED GREY, SANDY LOAM	2	0.4 S	18
-10 440.9	4	0.3 BKS	22
VERY SOFT, VERY DAMP, DARK GREY, CLAY LOAM **RECOVERY OF RODS & SAMPLER PENETRATED MATERIAL	2		27
437.4			
-15	7	0.8 BKS	27
HIDDEN, MOIST, MOTTLED BROWNISH ORANGE & GREY, CLAY	11	0.7 S	28
FREE WATER ENCOUNTERED AT ELEVATION 435.4	6	0.5 BKS	30
-20 430.9			
STIFF, MOIST, MOTTLED BROWNISH ORANGE & GREY CLAY WITH SOME VISIBLE MICACEOUS SAND	9	1.4 BKS	27
STIFF, CLAY 427.9	4	0.8 BKS	29
SOFT	3	0.3 S	25
-25			
MEDIUM, MOIST, BLUISH GREY, CLAY WITH VISIBLE AMOUNTS OF MICACEOUS SAND AND WHITE FOSSIL SPECKS	5	0.8	24
-30	7	0.7 S	26
419.9	8	1.1 S	22
-35 414.9			
MEDIUM TO STIFF, BLUISH GREY, MOIST, CLAY TO CLAY LOAM WITH INCREASING AMOUNTS OF VISIBLE MICACEOUS SAND AND SOME WHITE FOSSIL SPECKS	10	1.2 S	21
-40 410.9	19	1.0 S	20
DENSE, VERY MOIST, DARK GREY & BROWN, SAND WITH SANDSTONE FRAGMENTS 408.9	39		21
-45			

Bore No. 6 (CONT'D) Station 2199+30 Offset 47'11"E SURVEY

Elevation	N	Qu t/s.f.	w (%)
Ground Surface 0			
-40 408.7			
VERY DENSE, DAMP, LIGHT GREY, FINE, MICACEOUS, SAND			
**24" PENETRATION FOR 50 BLOWS (AUGER DRILLING DIFFICULT)			
403.9			
EXTENT OF EXPLORATION			
-50			
-55			

Bore No. 7 (ABUT.) Station 2193+20 Offset 47'11"E SURVEY

Elevation	N	Qu t/s.f.	w (%)
Ground Surface 451.1			
PEDERI, DAMP, LIGHT BROWN, SILTY CLAY LOAM	5	0.7 S	22
BOREHOLE SILTY LOAM	5	0.9 S	22
-5 445.6			
SOFT TO SOFT, MOTTLED BROWN & GREY, SILTY LOAM	4	0.5 S	25
440.6	3	0.5 S	24
-10			
VERY SOFT OR VERY LOOSE, VERY MOIST, LIGHT GREY, FINE, LOAM TO SANDY LOAM FREE WATER ENCOUNTERED AT ELEVATION 435.1	3	0.2 S	25
427.1	4		28
-15			
PEAT, VERY MOIST, LIGHT GREY, CLAY LOAM, HIGHLY ORGANIC WITH WOOD 430.1	11	1.2 BKS	28
STIFF TO MEDIUM, MOIST, BLUISH GREY MOTTLED BROWN, CLAY	8	0.8 BKS	28
-20			
	7	0.7 BKS	29
-25	5	0.7 BKS	27
423.1			
SOFT, VERY MOIST, DARK GREY, CLAY TO CLAY LOAM WITH VISIBLE AMOUNTS OF MICACEOUS SAND AND WHITE FOSSIL SPECKS 421.1	5		21
-30			
VERY LOOSE, VERY MOIST, DARK GREY, SAND WITH PIECES OF WOOD	4		25
417.6			
SOFT OR LOOSE, VERY MOIST, DARK GREY, SANDY CLAY LOAM	5		28
-35 414.6			
MEDIUM, MOIST, DARK GREY, SANDY CLAY LOAM WITH PIECES OF WOOD	11		22
412.1			
MEDIUM, VERY MOIST, DARK GREY, SAND WITH SOME SMALL GRAVEL PARTICLES.	12		20
-40			
409.6			
VERY DENSE, DAMP LIGHT GREY & DARK BROWN, MIXTURE OF SAND AND SMALL GRAVEL WITH WHITE FOSSILS. MATERIAL RESEMBLES A SOFT SANDROCK 409.1	108		15
-45			

VERY DENSE, DAMP, FINE, LIGHT GREY, MICACEOUS SAND WITH GRANITE PARTICLES RESEMBLING A SANDROCK			
**19 PENETRATION FOR 50 BLOWS (AUGER DRILLING DIFFICULT)			
-50			
404.1 EXTENT OF EXPLORATION			
-55			

DESIGNED	
CHECKED	
DRAWN	jacob3
CHECKED	

EXAMINED Carl E. Thurman Jr Mar 1st 1967
PASSED W. E. Bergmann
APPROVED O. E. Stutz

N- Standard Penetration Test- Blows per foot to drive 2" O.D. Split Spoon Sampler 12" with 140# hammer falling 30"

Qu-Unconfined Compressive Strength-t/sf
w- Water Content- percentage of oven dry weight-%

Type failure
B-Bulge Failure
S-Shear Failure
E-Estimated Value
P-Penetrometer

BORINGS
F.A.I. RT. 64 SEC. 41-7B-1
JEFFERSON COUNTY
STA. 2199 + 10

F41 Rt 64 Sec. 41-7B-1 Jefferson Co. Dist. 9

FILE NAME: H:\P220060 - I-64\Microstation\041-0075_0076\041010075_0076-024-Existing Plans.dgn

OATES ASSOCIATES
www.oatesassociates.com
ILLINOIS DESIGN FIRM LICENSE NO.: 184.001115

USER NAME =	DESIGNED -	REVISED -	
	CHECKED -	REVISED -	
PLOT SCALE =	DRAWN -	REVISED -	
PLOT DATE = 11/3/2022	CHECKED -	REVISED -	

STATE OF ILLINOIS
DEPARTMENT OF TRANSPORTATION

EXISTING PLANS
SN 041-0075 (E.B.) & 041-0076 (W.B.)
SHEET 24 OF 24 SHEETS

F.A.I. RTE.	SECTION	COUNTY	TOTAL SHEETS	SHEET NO.
64	(41-6,41-6-1,41-7)RS-2,BSMART 2023	JEFFERSON	1052	380
		CONTRACT NO. 78604		
		ILLINOIS	FED. AID PROJECT	

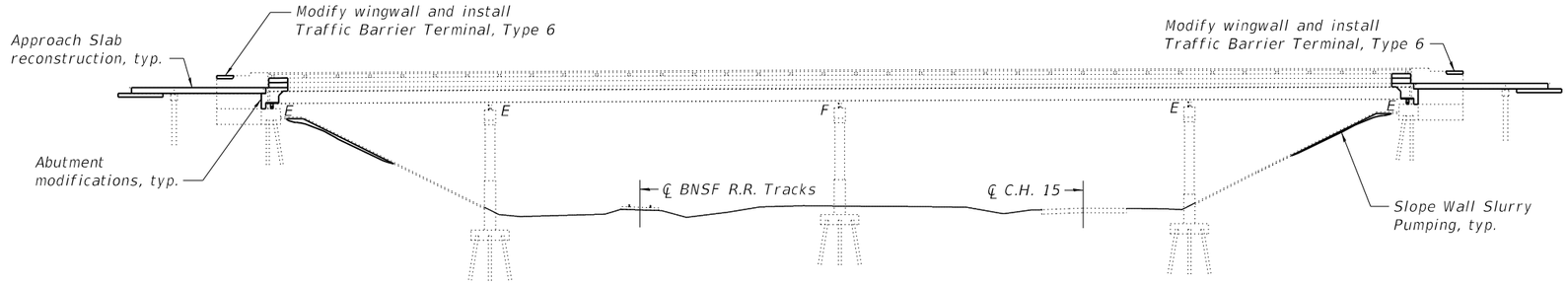

ELEVATION

SCOPE OF WORK

1. Scarify deck 2½".
2. Perform deck repairs as shown. Plug every other floor drains as shown.
3. Replace bearings at abutments.
4. Remove and replace bridge approach slabs and pavement connectors including removal of buried pile bent caps.
5. Modify parapets to accommodate Traffic Barrier Terminals, Type 6.
6. Convert existing stub abutments to semi-integral abutments.
7. Install new latex concrete overlay on bridge deck and perform diamond grinding, longitudinal bridge deck grooving and apply protective coat. Up to ¼" may be ground off the bridge deck latex concrete overlay and the bridge approach slabs.
8. Perform structural repair of concrete on pier caps.
9. Perform Slope Wall Slurry Pumping.

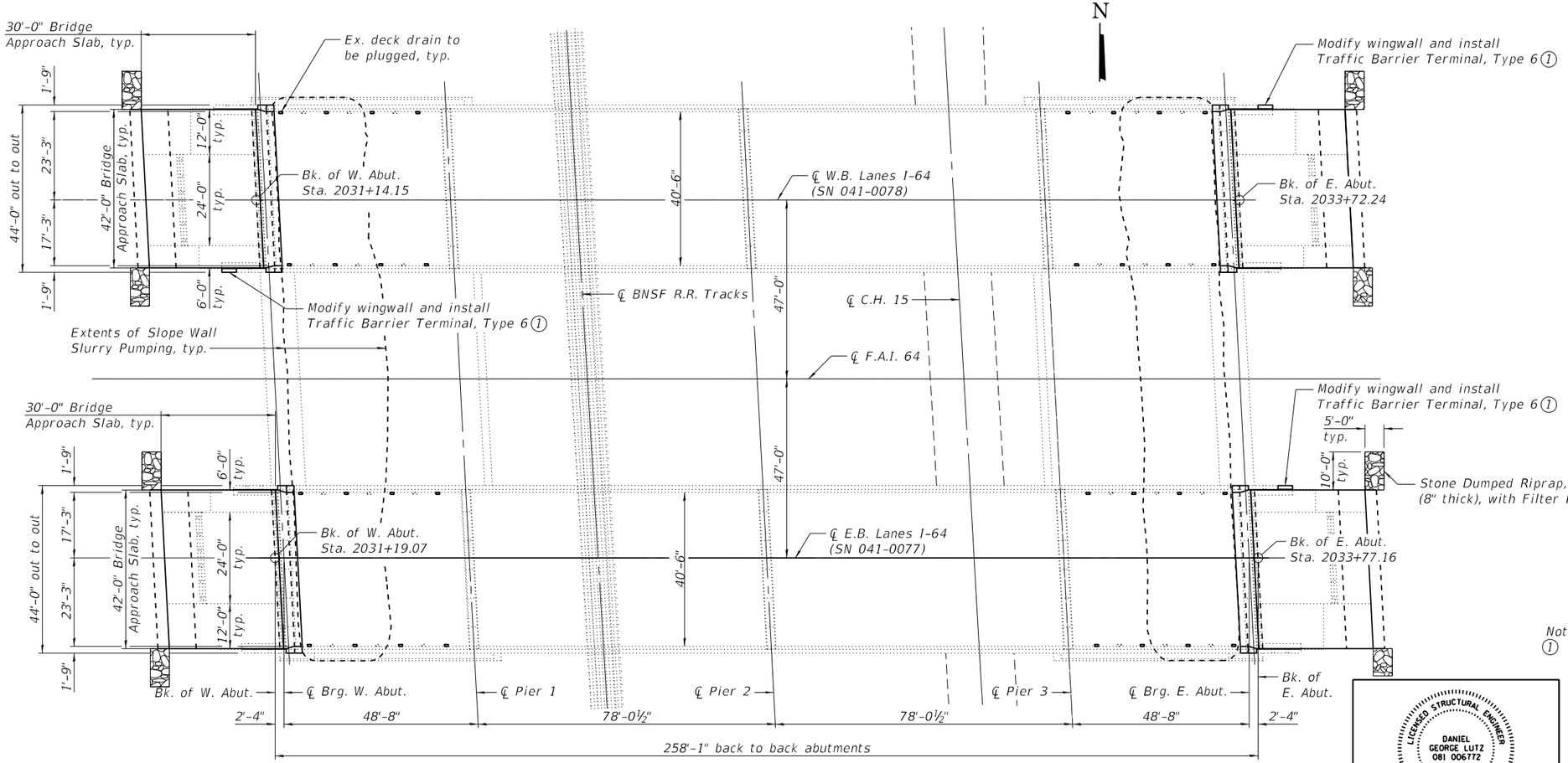

PLAN

DESIGN STRESSES

FIELD UNITS

New Construction
f'c = 4,000 psi (Superstructure)
fy = 60,000 psi (Reinforcement)
fy = 36,000 psi (M270 Grade 36)

INDEX OF SHEETS

Sheet No.	Description
1	General Plan & Elevation
2	General Data
3	Deck Patching Plan
4	Removal Details
5	Diaphragm Plan & Elevation
6-7	Diaphragm Details
8-9	Bridge Approach Slab Details
10	Abutment Details
11	Bearing Details
12	Substructure Repairs
13-26	Existing Plans

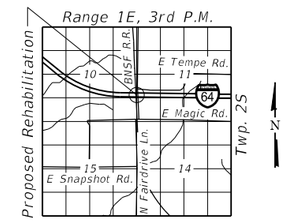

LOCATION SKETCH

Notes
(1) For details of wingwall modification, see Sheet 10 of 26.

LICENSED STRUCTURAL ENGINEER
DANIEL GEORGE LUTZ
081 006772
STATE OF ILLINOIS

DATE: 12/7/2022

EXPIRATION: 11/30/2024

GENERAL PLAN & ELEVATION
I-64 OVER RAILROAD & C.H. 15
F.A.I. RTE. 64
SEC (41-6,41-6-1,41-7)RS-2,BSMART 2023
JEFFERSON COUNTY
STATION 2032+45.66
STRUCTURE NO. 041-0077 (E.B.)
STRUCTURE NO. 041-0078 (W.B.)

OATES ASSOCIATES
www.oatesassociates.com
ILLINOIS DESIGN FIRM LICENSE NO.: 184.001115

USER NAME =	DESIGNED - KBC	REVISED -	
	CHECKED - ETH	REVISED -	
PLOT SCALE =	DRAWN - NBB	REVISED -	
PLOT DATE = 12/7/2022	CHECKED - KBC	REVISED -	

STATE OF ILLINOIS
DEPARTMENT OF TRANSPORTATION

GENERAL PLAN & ELEVATION
SN 041-0077 (E.B.) & 041-0078 (W.B.)
SHEET 1 OF 26 SHEETS

F.A.I. RTE.	SECTION	COUNTY	TOTAL SHEETS	SHEET NO.
64	(41-6,41-6-1,41-7)RS-2,BSMART 2023	JEFFERSON	1052	381
		CONTRACT NO. 78604		
		ILLINOIS	FED. AID PROJECT	

FILE NAME: \\Oates-fs02\data\P\220060 - I-64\Microstation\041-0077_007804107 7_0078-001-General Plan & Elevation.dgn

GENERAL NOTES

Reinforcement bars designated (E) shall be epoxy coated.

Prior to pouring the new concrete deck and diaphragm, all heavy or loose rust, loose mill scale, and other loose or potentially detrimental foreign material shall be removed from the surface in contact with concrete. Tightly adhered paint may remain unless otherwise noted. Removal shall be accomplished by methods that will not damage the steel and the cost will be included in the pay item covering removal of the existing concrete.

As directed by the Engineer, existing construction accessories welded to the top flange of beams and girders shall be removed. The weld areas shall be ground flush and inspected for cracks using magnetic particle testing (MT) or dye penetrant testing (PT) by qualified personnel approved by the Engineer. Any cracks that cannot be removed by grinding ¼" deep shall be identified and reported to the Bureau of Bridges and Structures for further disposition. The cost of removing welded accessories, grinding, and inspecting weld areas and grinding cracks will be paid for according to Article 109.04 of the Standard Specifications.

Plan dimensions and details relative to existing plans are subject to nominal construction variations. The Contractor shall field verify existing dimensions and details affecting new construction and make necessary approved adjustments prior to construction or ordering of materials. Such variations shall not be cause for additional compensation for a change in scope of the work, however, the Contractor will be paid for quantity actually furnished at the unit price bid for the work.

All new structural steel and bearing assembly shall be hot-dip galvanized. See Special Provision for "Hot Dip Galvanizing for Structural Steel".

Existing structural steel that will be in contact with new structural steel shall be cleaned and painted prior to erection as required by the Special Provision for "Cleaning and Painting Contact Surface Areas of Existing Steel Structures".

The Contractor shall provide traffic control in accordance with Highway Standard 701301-04 whenever working over CH 15. Cost shall be included with Deck Slab Repair (Full Depth, Type I) or Deck Slab Repair (Full Depth, Type II).

TOTAL BILL OF MATERIAL

ITEM	UNIT	SN 041-0077	SN 041-0078	TOTAL
Stone Dumped Riprap, Class A3	Sq. Yd.	22	22	44
Filter Fabric	Sq. Yd.	22	22	44
Concrete Removal	Cu. Yd.	32.8	32.8	65.6
Structure Excavation	Cu. Yd.	162	162	324
Concrete Structures	Cu. Yd.	27.9	27.9	55.8
Concrete Superstructure	Cu. Yd.	47.9	47.9	95.8
Protective Coat	Sq. Yd.	664	664	1,328
Concrete Superstructure (Approach Slab)	Cu. Yd.	118.3	118.3	236.6
Furnishing and Erecting Structural Steel	Pound	2,430	2,430	4,860
Reinforcement Bars, Epoxy Coated	Pound	53,315	53,315	106,630
Elastomeric Bearing Assembly, Type I	Each	12	12	24
Anchor Bolts, ⅞"	Each	48	48	96
Granular Backfill for Structures	Cu. Yd.	162	162	324
Geocomposite Wall Drain	Sq. Yd.	106	106	212
Concrete Headwalls for Pipe Drains	Each	2	2	4
Pipe Underdrains for Structures 4"	Foot	176	176	352
Jack and Remove Existing Bearings	Each	12	12	24
Structural Steel Removal	Pound	3,030	3,030	6,060
Approach Slab Removal	Sq. Yd.	170	170	340
Bridge Deck Latex Concrete Overlay, 2 3/4 Inches	Sq. Yd.	1,108	1,108	2,216
Cleaning Bridge Seats	Sq. Ft.	242	242	484
Bridge Deck Scarification 2 1/2"	Sq. Yd.	1,108	1,108	2,216
Structural Repair of Concrete (Depth ≤ 5")	Sq. Ft.	10	10	20
Plug Existing Deck Drains	Each	16	16	32
Deck Slab Repair (Full Depth, Type I)	Sq. Yd.	1	1	2
Deck Slab Repair (Full Depth, Type II)	Sq. Yd.	24	16	40
Diamond Grinding (Bridge Section)	Sq. Yd.	1,424	1,424	2,848
Slope Wall Slurry Pumping	Cu. Yd.	50	50	100
Bridge Deck Grooving (Longitudinal)	Sq. Yd.	843	843	1,686

Notes:
1. Included in the cost of Pipe Underdrains for Structures, see Special Provisions.
2. For details of Fabric Reinforced Elastomeric Mat, see sheet 6 of 26.
3. All drainage system components shall extend to 2'-0" from the end of each wingwall except an outlet pipe shall extend until intersecting with the side slopes. The pipes shall drain into concrete headwalls. See Article 601.05 of the Standard Specifications and Highway Standard 601101.

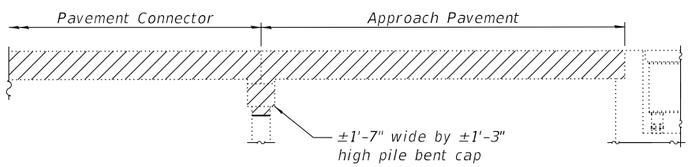

APPROACH SLAB REMOVAL

Existing approach slab and pavement connector to be removed. Buried pile bent cap to be completely removed. Piles shall be removed to 2' below finished grade. All work shall be paid for as Approach Slab Removal.

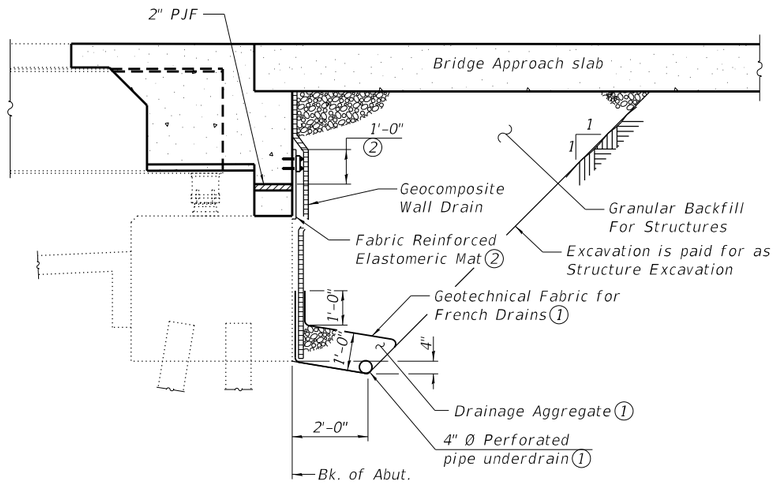

SECTION THRU SEMI-INTEGRAL ABUTMENT

(Horiz. dim. @ Rt. ∠'s)

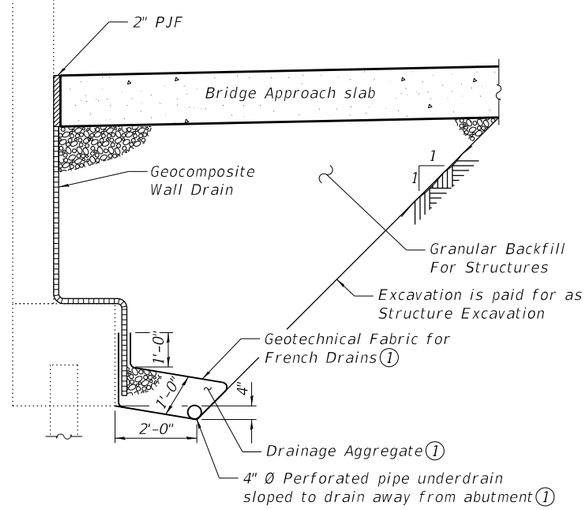

SECTION THRU ABUTMENT WINGWALL

(Horiz. dim. @ Rt. ∠'s)

FILE NAME: \\Oates-fs02\data\PA220060 - I-64\Microstation\041-0077_0078\0410077_0078-002-General Data.dgn

OATES ASSOCIATES
www.oatesassociates.com
ILLINOIS DESIGN FIRM LICENSE NO.: 184.001115

USER NAME =	DESIGNED - KBC	REVISED -	
	CHECKED - ETH	REVISED -	
PLOT SCALE =	DRAWN - KBC	REVISED -	
PLOT DATE = 11/10/2022	CHECKED - ETH	REVISED -	

STATE OF ILLINOIS
DEPARTMENT OF TRANSPORTATION

GENERAL DATA
SN 041-0077 (E.B.) & 041-0078 (W.B.)
SHEET 2 OF 26 SHEETS

F.A.I. RTE.	SECTION	COUNTY	TOTAL SHEETS	SHEET NO.
64	(41-6,41-6-1,41-7)RS-2,BSMART 2023	JEFFERSON	1052	382
		CONTRACT NO. 78604		
	ILLINOIS	FED. AID PROJECT		

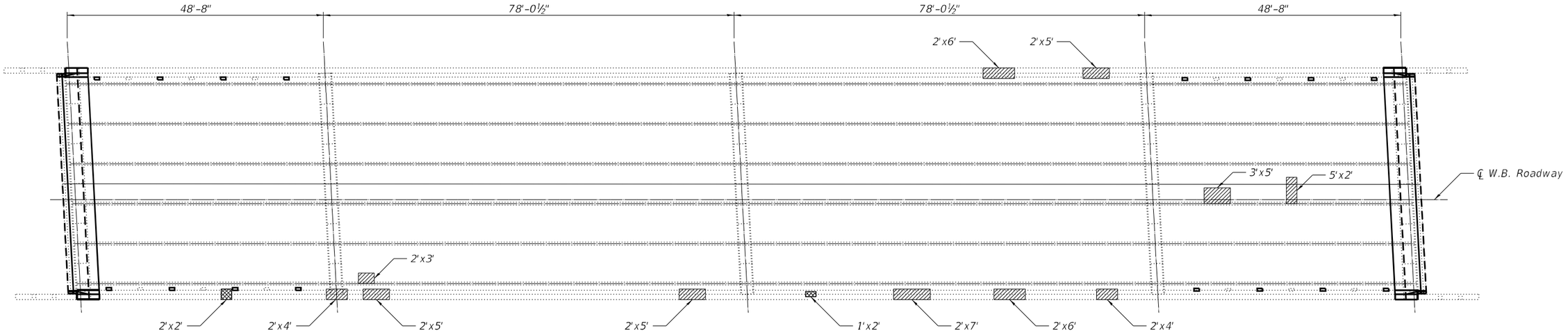

DECK PLAN
SN 041-0078

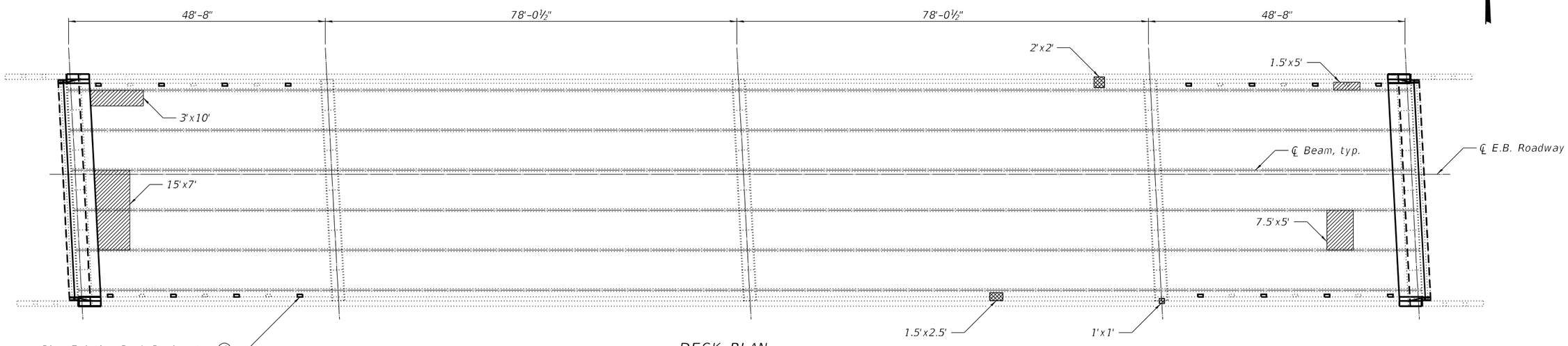

DECK PLAN
SN 041-0077

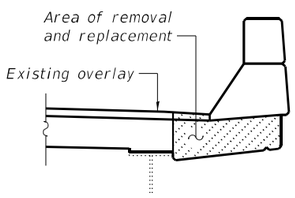

TYPICAL DECK SLAB REPAIR AT OVERHANG

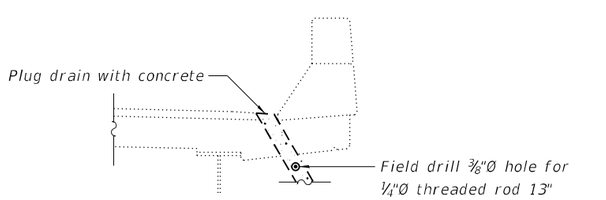

DECK DRAIN PLUG DETAIL

BILL OF MATERIAL

	ITEM	UNIT	SN 041-0077	SN 041-0078	TOTAL
	Deck Slab Repair (Full Depth, Type I)	Sq. Yd.	1	1	2
③	Deck Slab Repair (Full Depth, Type II)	Sq. Yd.	24	16	40
	Plug Existing Deck Drains	Each	16	16	32

LEGEND

Deck Slab Repair (Full Depth, Type I)

Deck Slab Repair (Full Depth, Type II)

Notes:

① The Resident Engineer will determine final treatment locations and quantities in the field after removal of concrete wearing surface, before deck treatment operations begin.

② The Engineer shall show actual locations of deck repairs on As-built Plans.

③ Deck Slab Repair quantities shown include an additional 20% for repair areas not visually identified in the field.

④ If present, drain extensions shall be removed. Cost included in Plug Existing Deck Drains.

FILE NAME: H:\P220060 - I-64\Microstation\041-0077_0078\0410077_0078-003-Deck Patching Plan.dgn

OATES ASSOCIATES
www.oatesassociates.com
ILLINOIS DESIGN FIRM LICENSE NO.: 184.001115

USER NAME =	DESIGNED - ETH	REVISED -	
	CHECKED - KBC	REVISED -	
PLOT SCALE =	DRAWN - ETH	REVISED -	
PLOT DATE = 11/4/2022	CHECKED - KBC	REVISED -	

STATE OF ILLINOIS
DEPARTMENT OF TRANSPORTATION

DECK PATCHING PLAN
SN 041-0077 (E.B.) & 041-0078 (W.B.)
SHEET 3 OF 26 SHEETS

F.A.I. RTE.	SECTION	COUNTY	TOTAL SHEETS	SHEET NO.
64	(41-6,41-6-1,41-7)RS-2,BSMART 2023	JEFFERSON	1052	383
		CONTRACT NO. 78604		
	ILLINOIS FED. AID PROJECT			

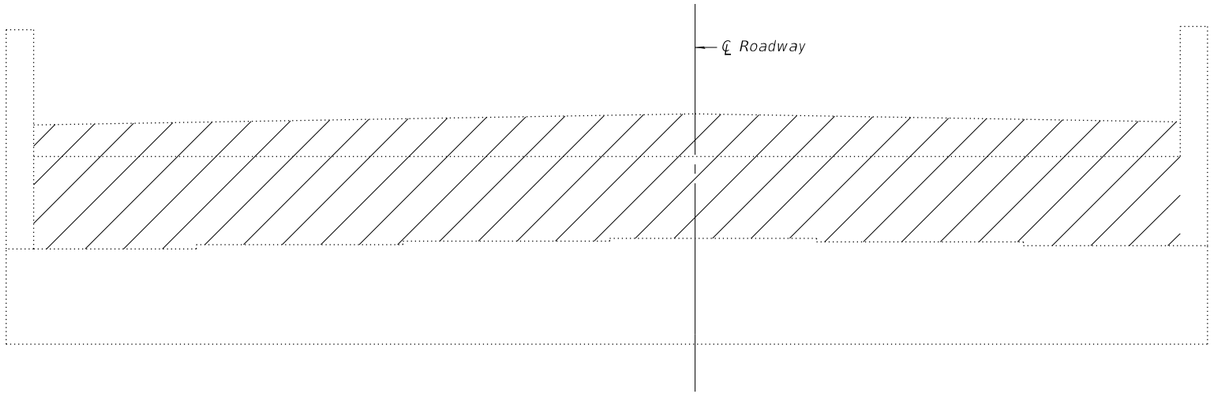

ELEVATION

SN 041-0077 west abutment shown, SN 041-0077 east abutment similar
SN 041-0078 east abutment shown, SN 041-0078 west abutment similar

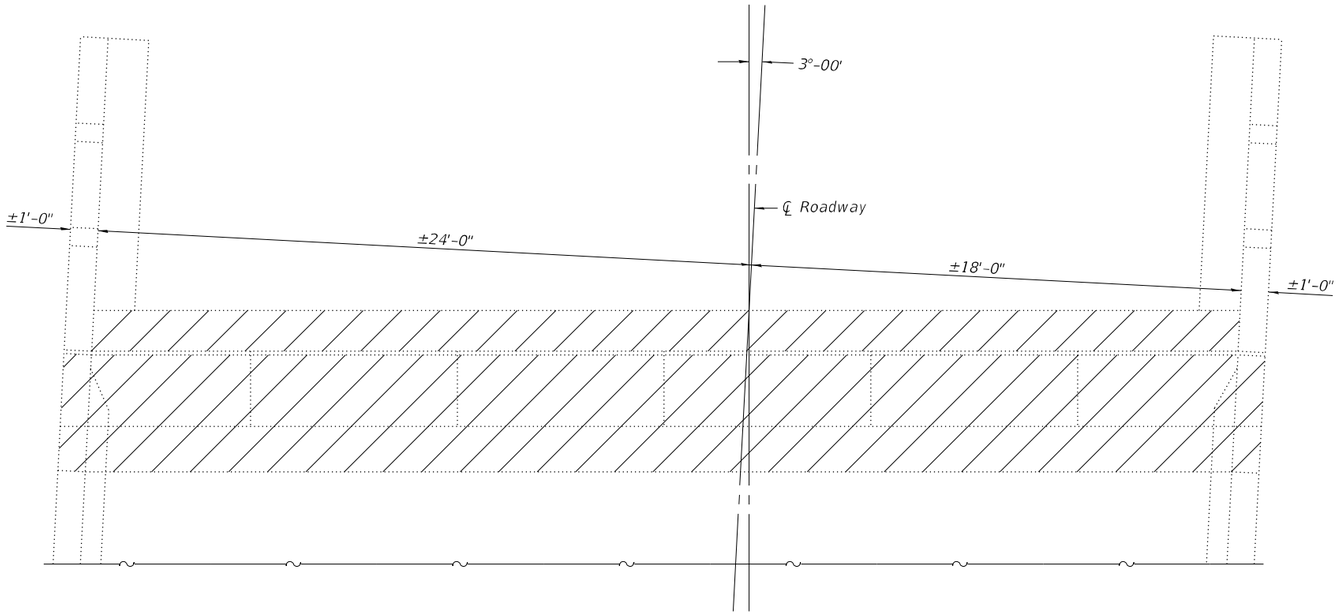

PLAN

SN 041-0077 west abutment shown, SN 041-0077 east abutment similar
SN 041-0078 east abutment shown, SN 041-0078 west abutment similar

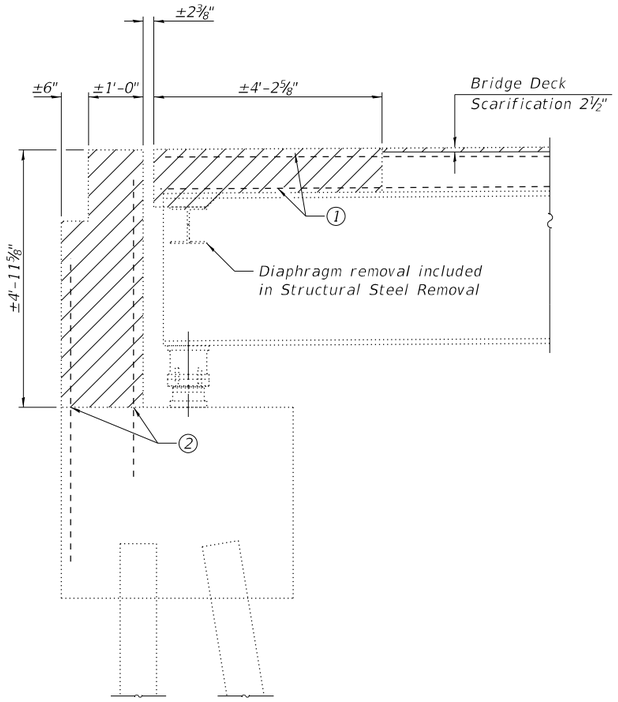

SECTION THRU ABUTMENT

LEGEND

Concrete Removal

BILL OF MATERIAL

(Four Abutments)

ITEM	UNIT	TOTAL
Concrete Removal	Cu. Yd.	65.6

Notes:
① Existing reinforcement extending into removal area as shown shall be cleaned, straightened, and incorporated into the new construction. Any reinforcement bars that are damaged during concrete removal shall be replaced with an approved bar splicer anchorage system. Cost shall be included with Concrete Removal.
② Existing vertical reinforcement extending into backwall shall be cut flush and sealed with epoxy.

FILE NAME: H:\P220060 - I-64\Microstation\041-0077_0078\041-0077_0078-004-Removal Details.dgn

OATES ASSOCIATES
www.oatesassociates.com
ILLINOIS DESIGN FIRM LICENSE NO.: 184.001115

USER NAME =	DESIGNED - ETH	REVISED -	
	CHECKED - KBC	REVISED -	
PLOT SCALE =	DRAWN - ETH	REVISED -	
PLOT DATE = 11/4/2022	CHECKED - KBC	REVISED -	

STATE OF ILLINOIS
DEPARTMENT OF TRANSPORTATION

REMOVAL DETAILS
SN 041-0077 (E.B.) & 041-0078 (W.B.)
SHEET 4 OF 26 SHEETS

F.A.I. RTE.	SECTION	COUNTY	TOTAL SHEETS	SHEET NO.
64	(41-6,41-6-1,41-7)RS-2,BSMART 2023	JEFFERSON	1052	384
		CONTRACT NO. 78604		
	ILLINOIS	FED. AID PROJECT		

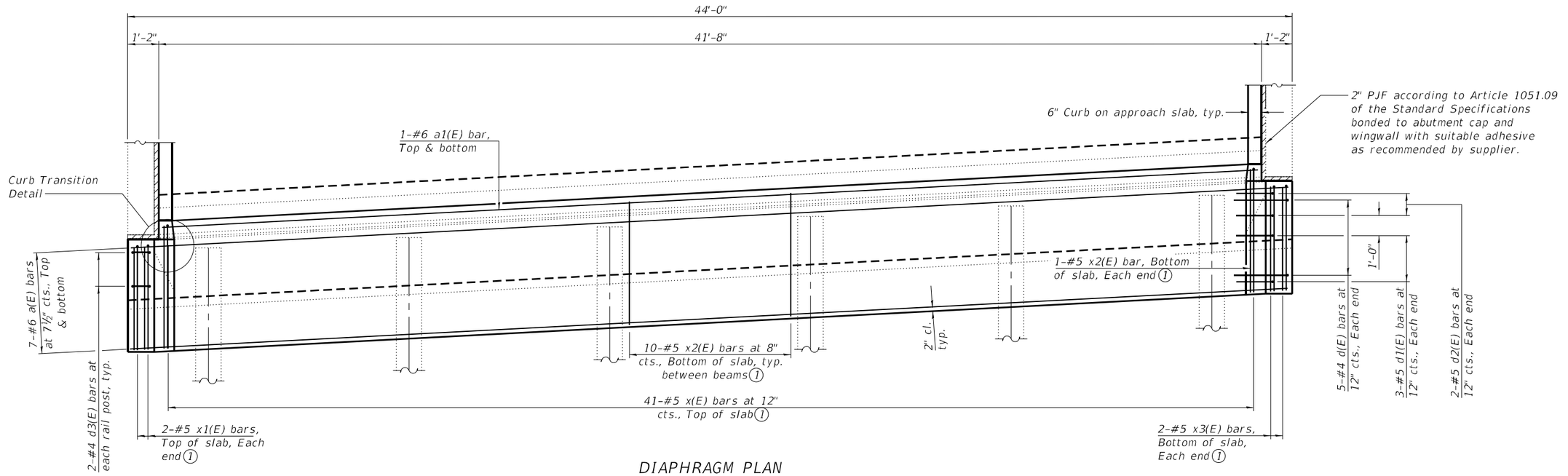

DIAPHRAGM PLAN

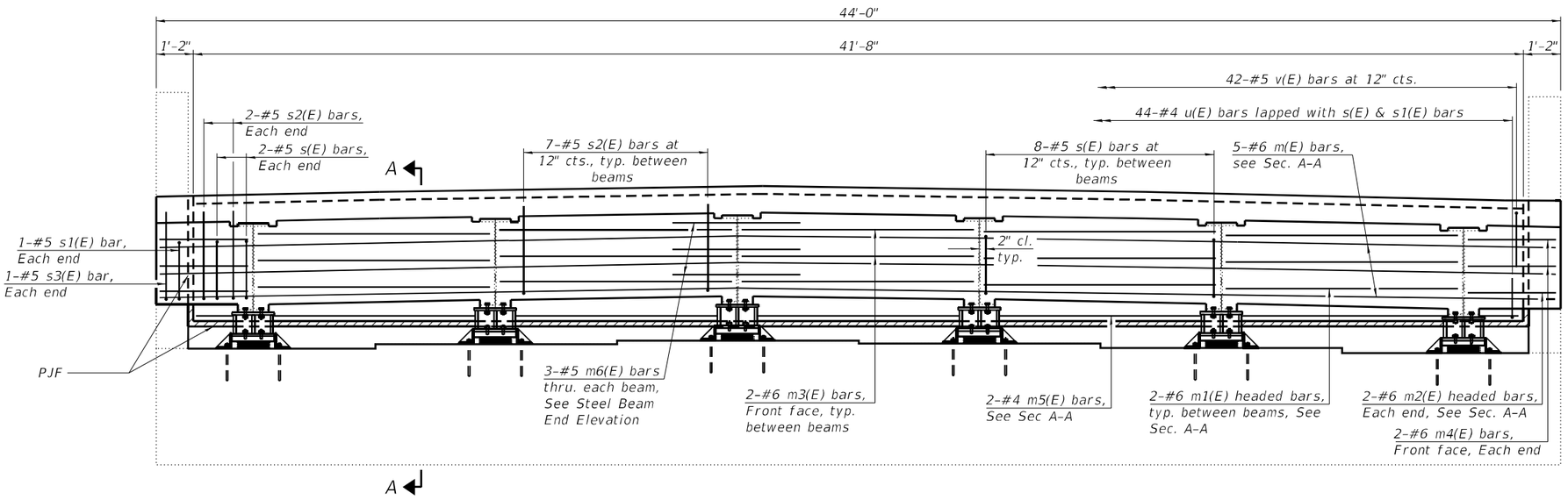

DIAPHRAGM ELEVATION

Notes:
1. x(E), x1(E), x2(E), & x3(E) bars shall be lapped with existing longitudinal reinforcement in deck.
2. For Section A-A, curb transition, and diaphragm details, See Sheet 6 of 26.
3. For Steel Beam End Elevation, Bill of Material, and additional diaphragm details, See Sheet 7 of 26.

FILE NAME: H:\Pt2220060 - I-64\Microstation\041-0077_0078\041077_0078-005-Diaphragm Plan & Elevation.dgn

OATES ASSOCIATES
www.oatesassociates.com
ILLINOIS DESIGN FIRM LICENSE NO.: 184.001115

USER NAME =	DESIGNED - ETH	REVISED -	
	CHECKED - KBC	REVISED -	
PLOT SCALE =	DRAWN - NBB	REVISED -	
PLOT DATE = 11/4/2022	CHECKED - ETH	REVISED -	

STATE OF ILLINOIS
DEPARTMENT OF TRANSPORTATION

DIAPHRAGM PLAN & ELEVATION
SN 041-0077 (E.B.) & 041-0078 (W.B.)
SHEET 5 OF 26 SHEETS

F.A.I. RTE.	SECTION	COUNTY	TOTAL SHEETS	SHEET NO.
64	(41-6,41-6-1,41-7)RS-2,BSMART 2023	JEFFERSON	1052	385
		CONTRACT NO. 78604		
	ILLINOIS	FED. AID PROJECT		

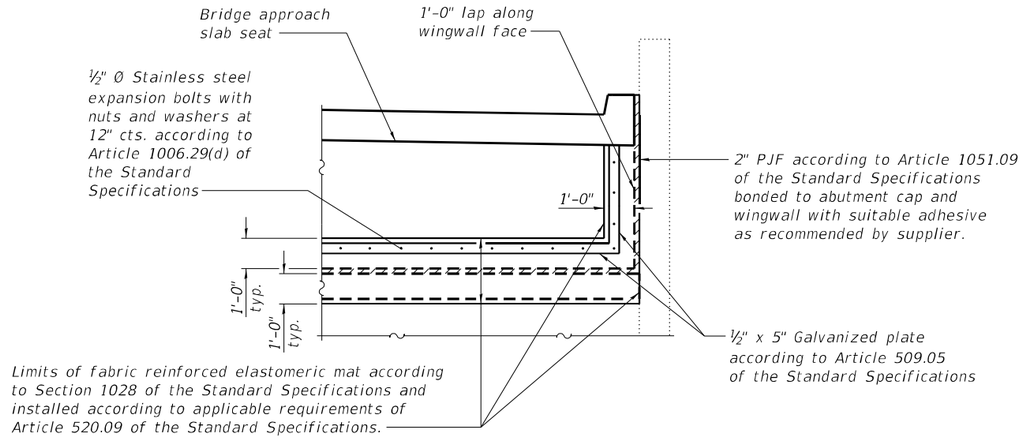

PARTIAL ELEVATION

(Looking at back of abutment)

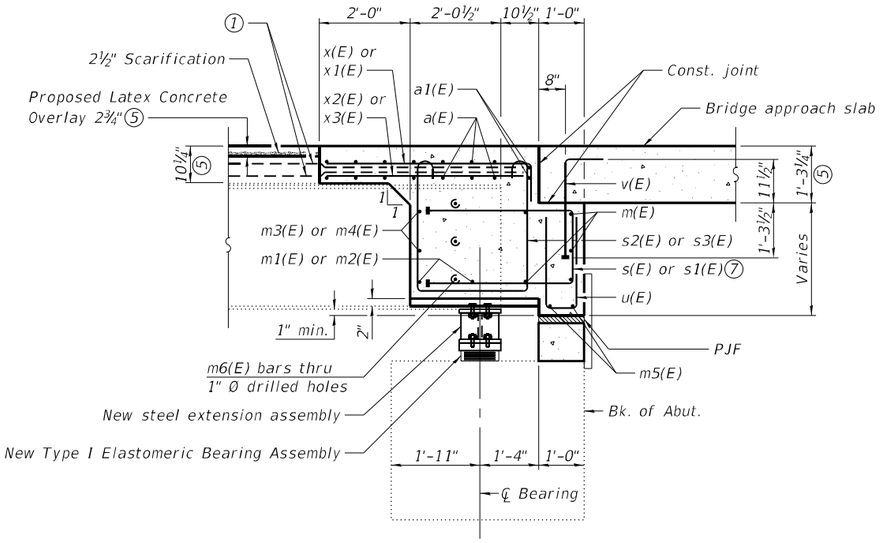

SECTION A-A

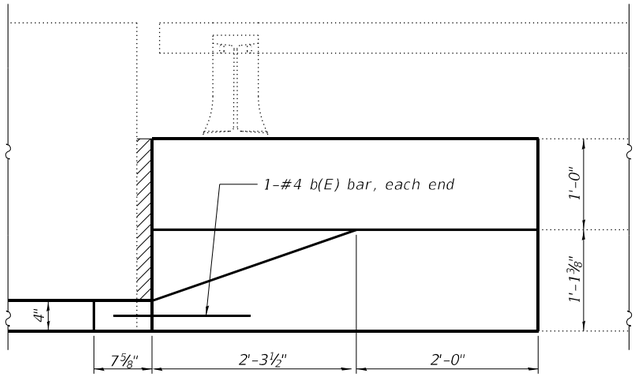

CURB TRANSITION ELEVATION 6

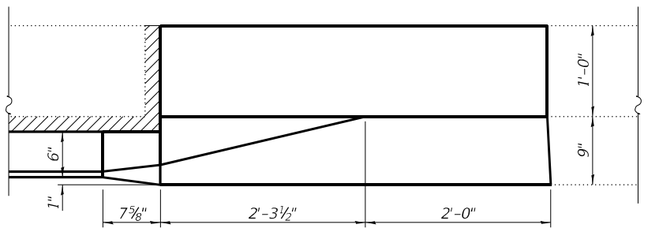

CURB TRANSITION PLAN 6

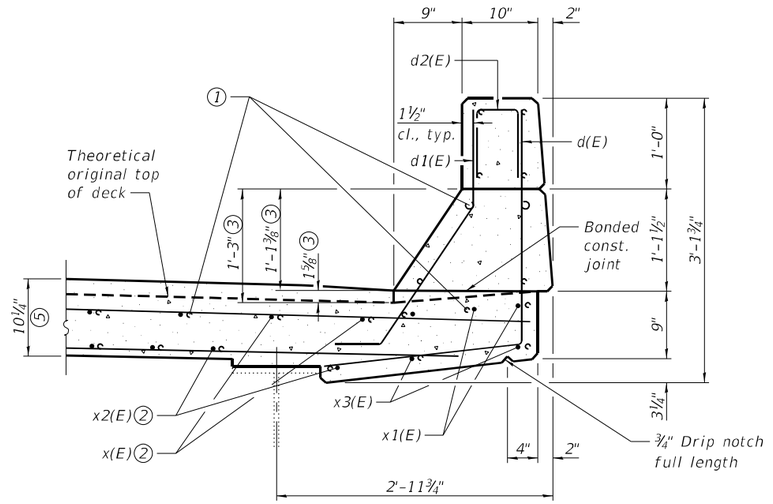

SECTION THRU PARAPET

Notes:

1. Existing reinforcement extending into removal area as shown shall be cleaned, straightened, and incorporated into the new construction. Any reinforcement bars that are damaged during concrete removal shall be replaced with an approved bar splicer anchorage system. Cost shall be included with Concrete Removal.
2. x(E), x1(E), x2(E), & x3(E) bars shall be lapped with existing longitudinal reinforcement in deck.
3. Based on original 8" deck. Proposed parapet section to align with existing parapet section.
4. Cost of fabric reinforced elastomeric mats, galvanized angles and plates, stainless steel expansion bolts with nuts and washers, galvanized bolts with nuts and washers and installation are included in the cost of Concrete Superstructure.
5. Proposed dimensions are shown prior to ¼" Diamond Grinding of overlay and approach slabs.
6. Transition parapet curb to approach curb as shown.
7. Field drill 1¼" Ø holes for s(E) bars through existing diaphragm as required, cost included with Concrete Superstructure.

FILE NAME: H:\P2220060 - I-64\Microstation\041-0077_0078\041077_0078-006-Diaphragm Details.dgn

OATES ASSOCIATES
www.oatesassociates.com
ILLINOIS DESIGN FIRM LICENSE NO.: 184.001115

USER NAME =		DESIGNED - ETH	REVISED -	
		CHECKED - KBC	REVISED -	
PLOT SCALE =		DRAWN - NBB	REVISED -	
PLOT DATE =	11/4/2022	CHECKED - ETH	REVISED -	

STATE OF ILLINOIS
DEPARTMENT OF TRANSPORTATION

DIAPHRAGM DETAILS
SN 041-0077 (E.B.) & 041-0078 (W.B.)
SHEET 6 OF 26 SHEETS

F.A.I. RTE.	SECTION	COUNTY	TOTAL SHEETS	SHEET NO.
64	(41-6,41-6-1,41-7)RS-2,BSMART 2023	JEFFERSON	1052	386
		CONTRACT NO. 78604		
	ILLINOIS FED. AID PROJECT			

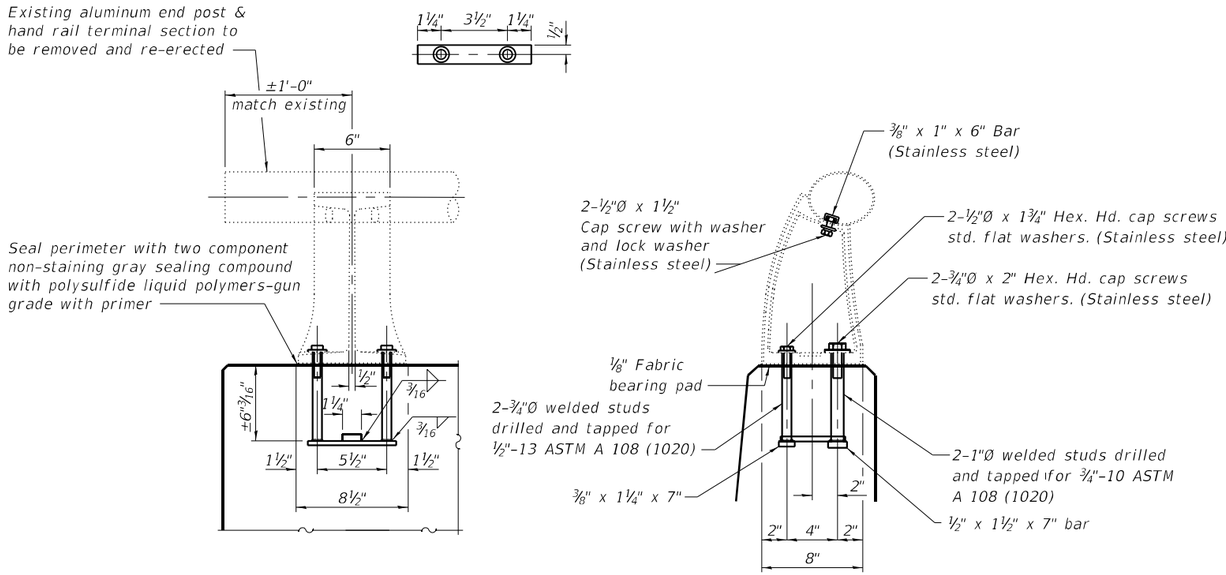

RAIL POST DETAILS

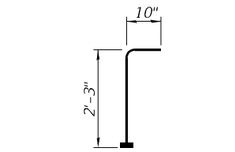

BAR v(E)
(Headed)

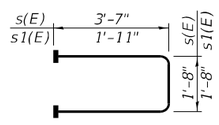

BARS s(E) & s1(E)
(Headed)

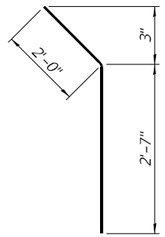

BAR d(E)



BARS x(E) & x1(E)

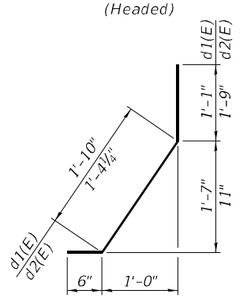

BARS d1(E) & d2(E)

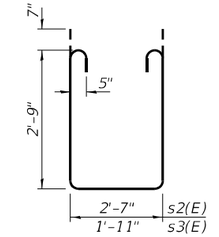

BARS s2(E) & s3(E)



BARS m1(E) & m2(E)
(Headed)

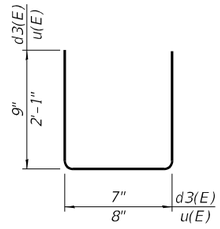

BARS d3(E) & u(E)

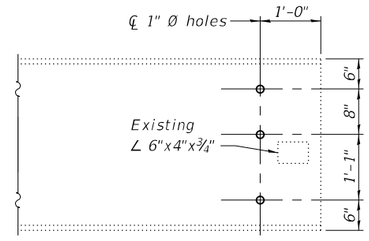

STEEL BEAM END ELEVATION

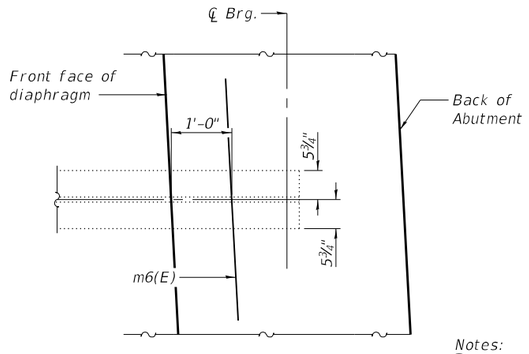

PARTIAL PLAN AT BEAMS

(Showing bottom flange of beam)

BILL OF MATERIAL

(Four Diaphragms)

Bar	No.	Size	Length	Shape
a(E)	56	#6	43'-8"	
a1(E)	8	#6	41'-4"	
b(E)	8	#4	1'-6"	
d(E)	40	#4	4'-7"	
d1(E)	24	#5	3'-5"	
d2(E)	16	#5	3'-7"	
d3(E)	16	#4	2'-1"	
m(E)	20	#6	41'-4"	
m1(E)	40	#6	7'-2"	
m2(E)	16	#6	2'-8"	
m3(E)	40	#6	7'-2"	
m4(E)	16	#6	2'-8"	
m5(E)	8	#4	41'-4"	
m6(E)	72	#5	4'-0"	
s(E)	176	#5	8'-10"	
s1(E)	8	#5	5'-6"	
s2(E)	156	#5	9'-3"	
s3(E)	8	#5	8'-7"	
u(E)	176	#4	4'-10"	
v(E)	168	#5	3'-1"	
x(E)	172	#5	5'-5"	
x1(E)	16	#5	4'-9"	
x2(E)	208	#5	4'-7"	
x1(E)	16	#5	3'-11"	
Reinforcement Bars, Epoxy Coated			Pound	13,680
Concrete Superstructure			Cu. Yd.	95.8

Notes:
1. Rail shall be removed and re-erected as necessary to allow structure modifications. Cost included in Concrete Removal.
2. Headed bars shall conform to ASTM A970 with threaded attachment; Class HA; and reinforcement bars conforming to ASTM A706. Cost included with Reinforcement Bars, Epoxy Coated.

FILE NAME: H:\P220060 - I-64\Microstation\041-0077_0078\041007 7_0078-007-Diaphragm Details.dgn

OATES ASSOCIATES
www.oatesassociates.com
ILLINOIS DESIGN FIRM LICENSE NO.: 184.001115

USER NAME =		DESIGNED -	ETH	REVISED -
		CHECKED -	KBC	REVISED -
PLOT SCALE =		DRAWN -	NBB	REVISED -
PLOT DATE =	11/4/2022	CHECKED -	ETH	REVISED -

STATE OF ILLINOIS
DEPARTMENT OF TRANSPORTATION

DIAPHRAGM DETAILS
SN 041-0077 (E.B.) & 041-0078 (W.B.)
SHEET 7 OF 26 SHEETS

F.A.I. RTE.	SECTION	COUNTY	TOTAL SHEETS	SHEET NO.
64	(41-6,41-6-1,41-7)RS-2,BSMART 2023	JEFFERSON	1052	387
		CONTRACT NO. 78604		
	ILLINOIS FED. AID PROJECT			

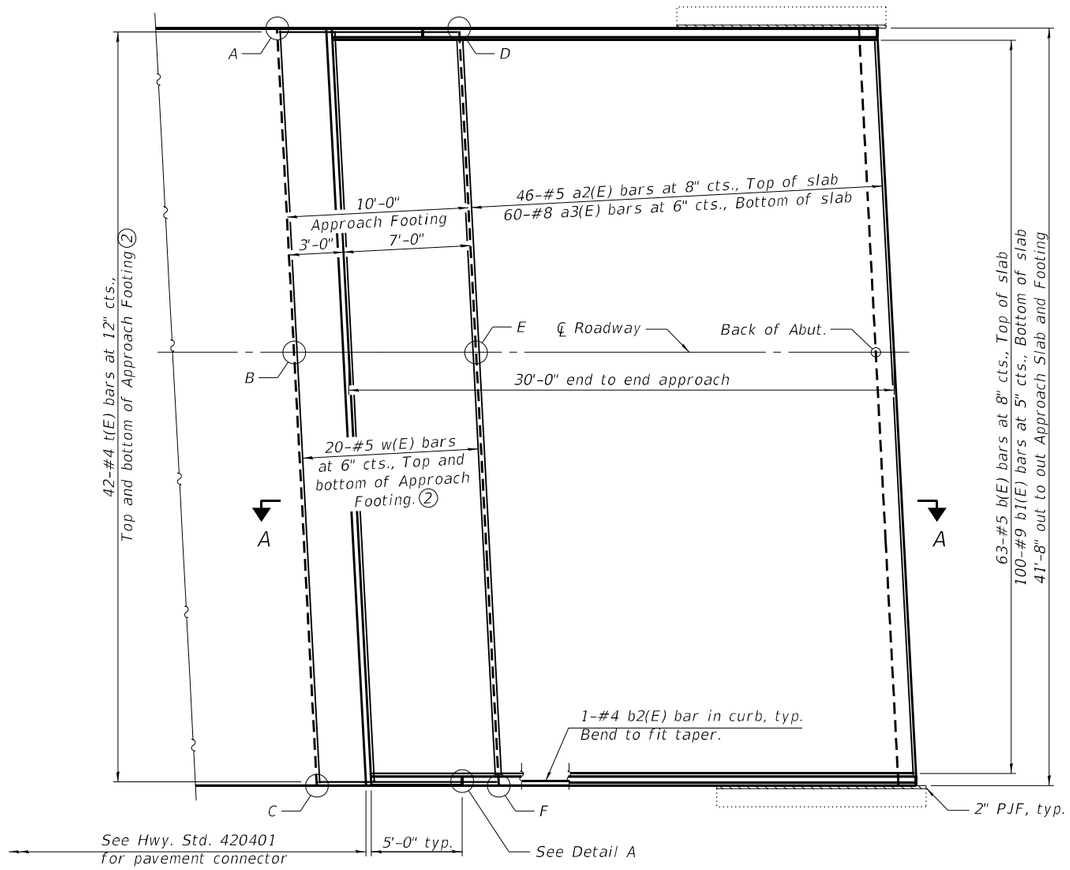

PLAN

SN 041-0077 west approach slab shown, SN 041-0077 east approach slab similar
SN 041-0078 east approach slab shown, SN 041-0078 west approach slab similar

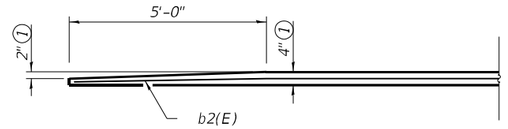

DETAIL A

TOP AND BOTTOM ELEVATIONS FOR APPROACH FOOTING ③

West Approach			East Approach		
Point/ Location	Top	Bottom	Point/ Location	Top	Bottom
A			A		
B			B		
C			C		
D			D		
E			E		
F			F		

West Approach			East Approach		
Point/ Location	Top	Bottom	Point/ Location	Top	Bottom
A			A		
B			B		
C			C		
D			D		
E			E		
F			F		

Notes:
① Proposed dimensions are shown following ¼" Diamond Grinding of overlay and approach slabs.
② For Section A-A, see sheet 9 of 26.
③ Elevations to be set by Engineer in the field to accommodate existing bridge elevations and proposed roadway elevations.

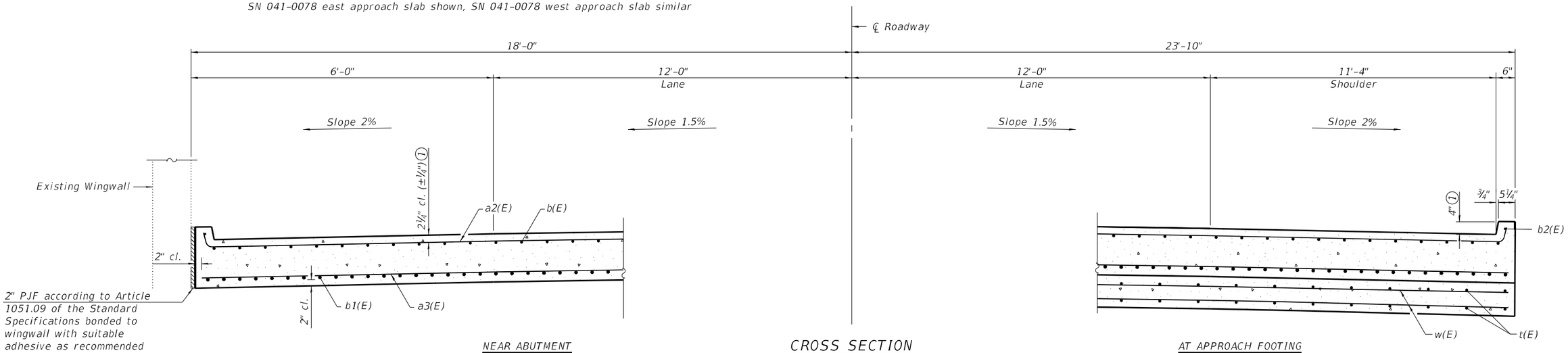

NEAR ABUTMENT

CROSS SECTION

(Looking in the direction of traffic)

AT APPROACH FOOTING

FILE NAME: H:\PX220060 - I-64\Microstation\041-0077_0078\041-0077_0078-008-Bridge Approach Slab Details.dgn

OATES ASSOCIATES
www.oatesassociates.com
ILLINOIS DESIGN FIRM LICENSE NO.: 184.001115

USER NAME =	DESIGNED - ORG	REVISED -	
	CHECKED - ETH	REVISED -	
PLOT SCALE =	DRAWN - ORG	REVISED -	
PLOT DATE = 11/4/2022	CHECKED - ETH	REVISED -	

STATE OF ILLINOIS
DEPARTMENT OF TRANSPORTATION

APPROACH SLAB DETAILS
SN 041-0077 (E.B.) & 041-0078 (W.B.)
SHEET 8 OF 26 SHEETS

F.A.I. RTE.	SECTION	COUNTY	TOTAL SHEETS	SHEET NO.
64	(41-6,41-6-1,41-7)RS-2,BSMART 2023	JEFFERSON	1052	388
		CONTRACT NO. 78604		
		ILLINOIS	FED. AID PROJECT	

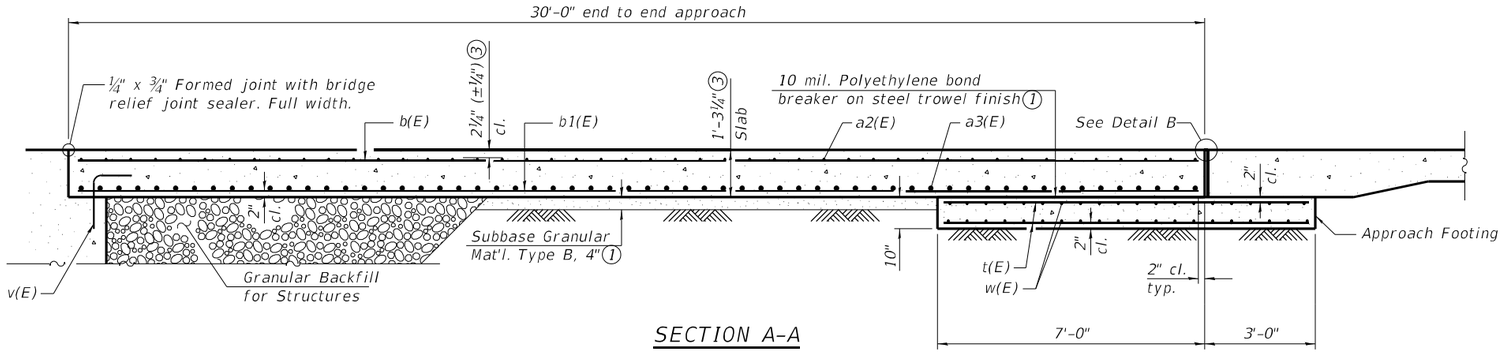

SECTION A-A

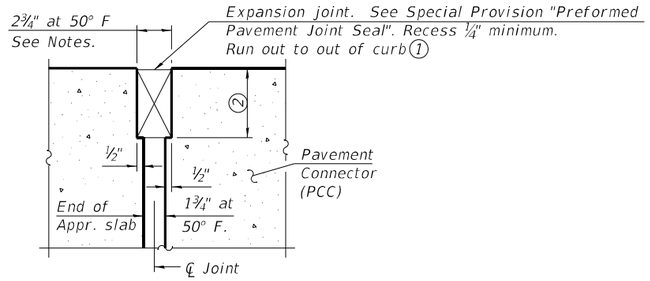

DETAIL B

BILL OF MATERIAL

(Four Approaches)

Bar	No.	Size	Length	Shape
a2(E)	184	#5	41'-9"	
a3(E)	240	#8	41'-4"	
b(E)	252	#5	29'-8"	
b1(E)	400	#9	29'-8"	
b2(E)	8	#4	29'-8"	
t(E)	336	#4	9'-8"	
w(E)	160	#5	41'-4"	
Concrete Structures			Cu. Yd.	51.6
Concrete Superstructure (Approach Slab)			Cu. Yd.	236.6
Reinforcement Bars, Epoxy Coated			Pound	91,860

Notes:
① Cost included with Concrete Superstructure (Approach Slab).
② Per manufacturer recommendations.
③ Proposed dimensions are shown prior to ¼" Diamond Grinding of overlay and approach slabs.
④ The joint opening shall be adjusted for temperature per Article 520.04 of the Standard Specifications. However, since this detail is for jointless structures, the length of bridge used to calculate the adjustment shall be equal to half the total bridge length plus the length of the bridge approach slab.
⑤ Approach slab shall be paid for as Concrete Superstructure (Approach Slab).
⑥ Approach footing concrete shall be paid for as Concrete Structures.
⑦ The approach footing maximum applied service bearing pressure (Qmax) = 2.0 ksf.
⑧ Cost of excavation for approach footing included with Concrete Structures.
⑨ For Granular Backfill for Structures and drainage treatment details, see sheet 2 of 26.

FILE NAME: H:\PX220060 - I-64\Microstation\041-0077_0078\041007 7_0078-009-Bridge Approach Slab Details.dgn

OATES ASSOCIATES
www.oatesassociates.com
ILLINOIS DESIGN FIRM LICENSE NO.: 184.001115

USER NAME =	DESIGNED - ORG	REVISED -	
	CHECKED - ETH	REVISED -	
PLOT SCALE =	DRAWN - ORG	REVISED -	
PLOT DATE = 11/4/2022	CHECKED - ETH	REVISED -	

STATE OF ILLINOIS
DEPARTMENT OF TRANSPORTATION

APPROACH SLAB DETAILS
SN 041-0077 (E.B.) & 041-0078 (W.B.)
SHEET 9 OF 26 SHEETS

F.A.I. RTE.	SECTION	COUNTY	TOTAL SHEETS	SHEET NO.
64	(41-6,41-6-1,41-7)RS-2,BSMART 2023	JEFFERSON	1052	389
		CONTRACT NO. 78604		
	ILLINOIS	FED. AID PROJECT		

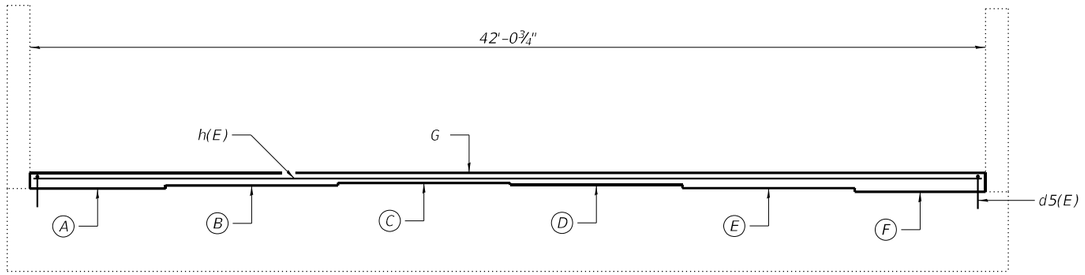

ELEVATION

SN 041-0077 east abutment shown, SN 041-0077 west abutment similar
SN 041-0078 west abutment shown, SN 041-0078 east abutment similar

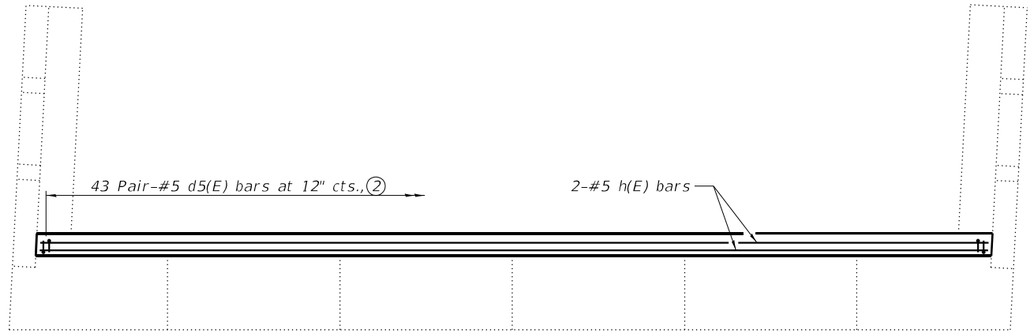

PLAN

Location	Elev. A	Elev. B	Elev. C	Elev. D	Elev. E	Elev. F	Elev. G
041-0077 - West Abut.	560.96	561.10	561.23	561.13	561.00	560.85	561.68
041-0077 - East Abut.	562.04	562.18	562.31	562.21	562.08	561.93	562.76
041-0078 - West Abut.	560.94	561.08	561.19	561.10	560.96	560.80	561.63
041-0078 - East Abut.	562.04	562.18	562.29	562.20	562.06	561.90	562.73

ELEVATIONS①

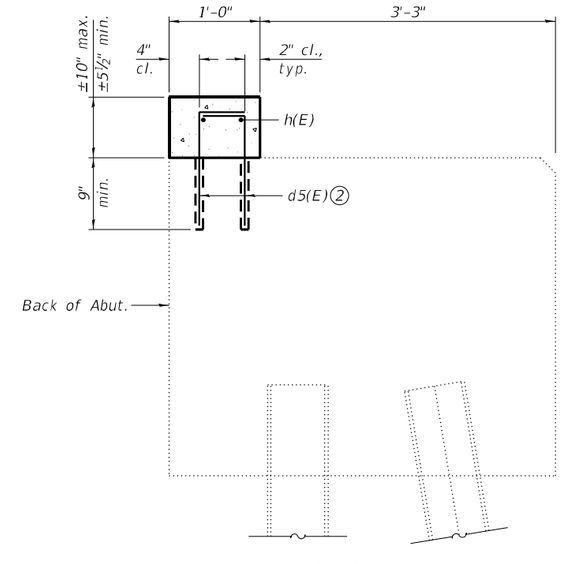

SECTION THRU EXISTING PILE CAP

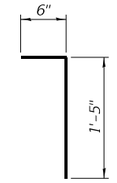

BAR d5(E)

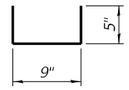

BAR d4(E)

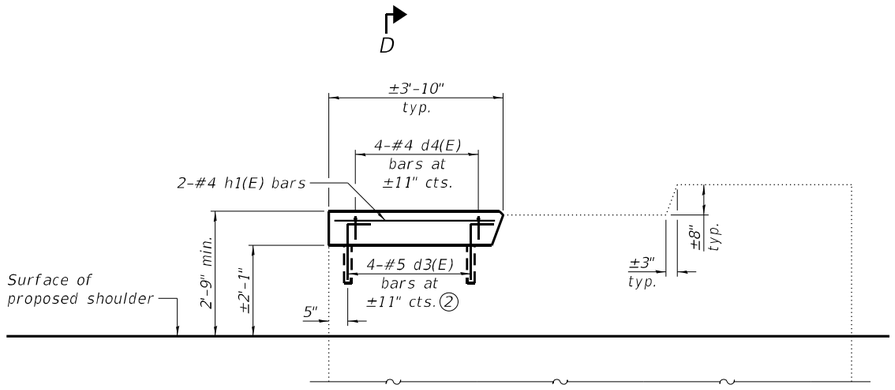

WINGWALL ELEVATION ③

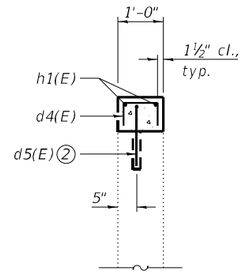

SECTION D-D

BILL OF MATERIAL

(Four Abutments)

Bar	No.	Size	Length	Shape
d4(E)	12	#4	1'-7"	
d5(E)	356	#5	1'-11"	
h(E)	8	#5	41'-8"	
h1(E)	6	#4	3'-6"	
Concrete Structures			Cu. Yd.	4.2
Reinforcement Bars, Epoxy Coated			Pound	1,090

Notes:
① Elevations are based on existing plans and are provided as a reference point. Actual elevations and dimensions in the field may vary.
② Epoxy grout d5(E) bars in 9" min. drilled holes according to Section 584 of the Standard Specifications. Trim bars to fit before grouting.
③ For wingwalls to be modified, see sheet 1 of 26.

FILE NAME: H:\P220060 - I-64\Microstation\041-0077_0078\0410077_0078-010-Abutment Details.dgn

OATES ASSOCIATES
www.oatesassociates.com
ILLINOIS DESIGN FIRM LICENSE NO.: 184.001115

USER NAME =	DESIGNED - ETH	REVISED -	
	CHECKED - KBC	REVISED -	
PLOT SCALE =	DRAWN - ETH	REVISED -	
PLOT DATE = 11/4/2022	CHECKED - KBC	REVISED -	

STATE OF ILLINOIS
DEPARTMENT OF TRANSPORTATION

ABUTMENT DETAILS
SN 041-0077 (E.B.) & 041-0078 (W.B.)
SHEET 10 OF 26 SHEETS

F.A.I. RTE.	SECTION	COUNTY	TOTAL SHEETS	SHEET NO.
64	(41-6,41-6-1,41-7)RS-2,BSMART 2023	JEFFERSON	1052	390
		CONTRACT NO. 78604		
	ILLINOIS FED. AID PROJECT			

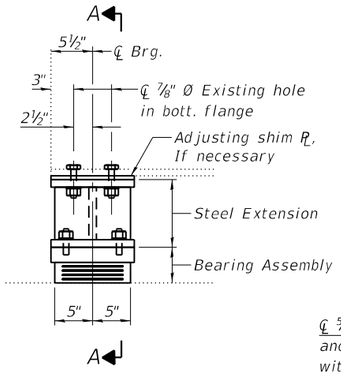

ELEVATION

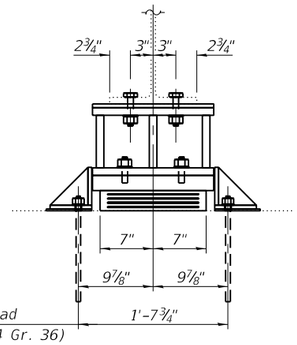

℄ ⅝"Ø x 12" All-thread anchor bolts (F 1554 Gr. 36) with 1¾" x 1¾" x 5/16" PL washer under nut.

SECTION A-A

TYPE I ELASTOMERIC EXP. BRG.

BEARING SHIM PLATES (W.B. STRUCTURE)

	Beam 1	Beam 2	Beam 3	Beam 4	Beam 5	Beam 6
West Abut.	⅜"	¼"	⅜"	½"	⅜"	⅜"
East Abut.	¼"	⅜"	⅛"	–	¼"	½"

BEARING SHIM PLATES (E.B. STRUCTURE)

	Beam 1	Beam 2	Beam 3	Beam 4	Beam 5	Beam 6
West Abut.	¼"	⅛"	¼"	⅛"	¼"	¼"
East Abut.	¼"	⅜"	¼"	⅛"	⅛"	⅜"

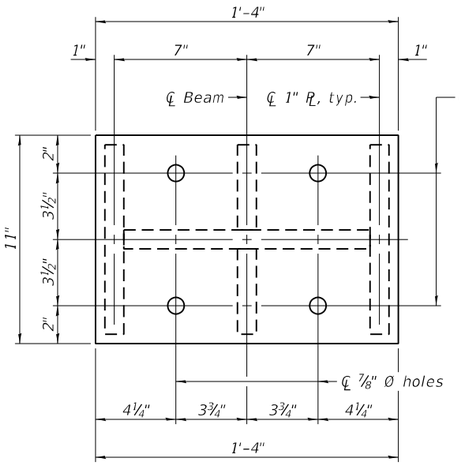

BOTTOM PLATE

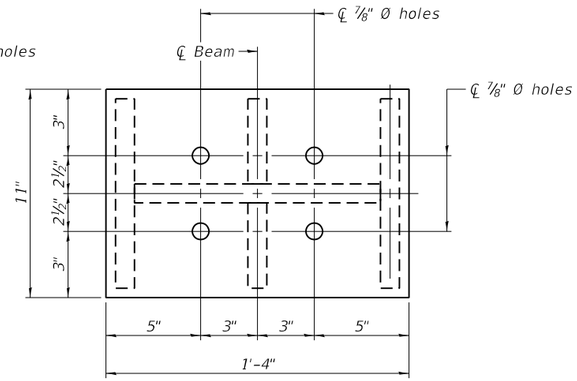

TOP PLATE

INTERIOR BEAM REACTION TABLE

	Existing Service Loads	Proposed Service Loads
R DL (k)	19.3	51.4 ④
R LL (k)	44.0	44.0
Imp (k)	12.7	12.7
R Total (k)	76.0	108.1

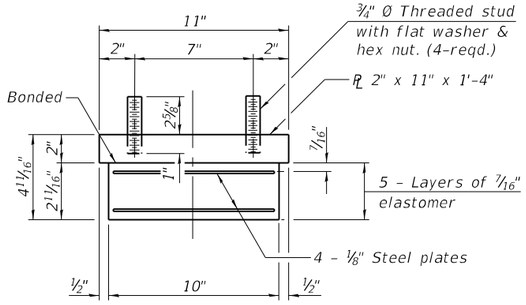

BEARING ASSEMBLY

Note:
Shim plates shall not be placed under bearing assembly.

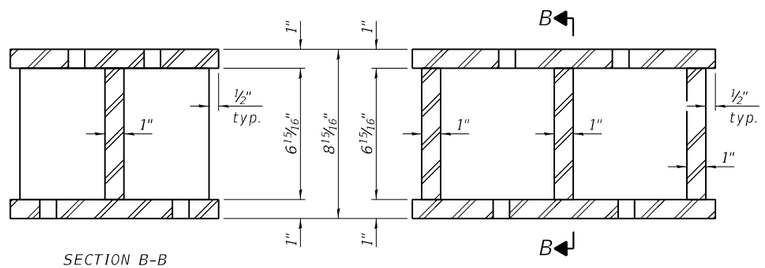

SECTION B-B

ELEVATION

STEEL EXTENSION

BILL OF MATERIAL

Item	Unit	Total
Furnishing and Erecting Structural Steel	Pound	4,860
Elastomeric Bearing Assembly, Type I	Each	24
Anchor Bolts, 5/8"	Each	96
Jack and Remove Existing Bearings	Each	24

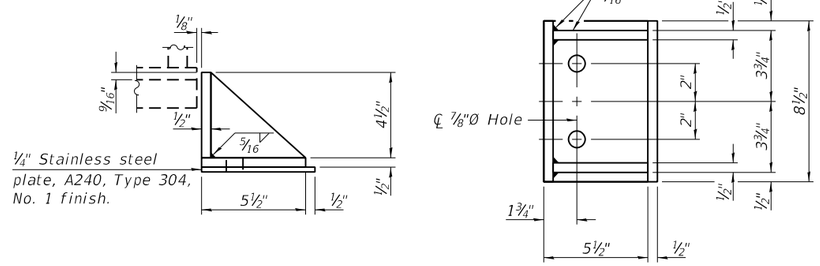

SIDE RETAINER

Equivalent rolled angle with stiffeners will be allowed in lieu of welded plates.

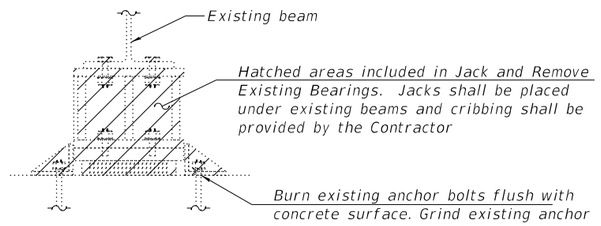

BEARING REMOVAL

Notes:
1. New steel extension, shim plates, and connection bolts are included with Furnishing and Erecting Structural Steel.
2. Prior to ordering any material, the Contractor shall verify in the field all the bearing height and shim thickness dimensions. Adjustment must account for deck heave due to pack rust, if present.
3. Minimum jack capacity = 15 tons.
4. Dead load reaction includes 32.1 kips for weight of diaphragm and approach slab.
5. Anchor bolts shall be ASTM F1554 all-thread (or an Engineer approved alternate material) of the grade and diameter specified. ASTM A 307 Grade C anchor bolts may used in lieu of ASTM F 1554 Grade 36 (Fy = 36 ksi). The corresponding specified grade of AASHTO M 314 anchor bolts may be used in lieu of ASTM F 1554.
6. Drilled and set anchors shall be installed according to Article 521.06 of the Standard Specifications.
7. Side retainers and stainless steel plates shall be included in the cost of Elastomeric Bearing Assembly, Type I.
8. For beam numbering layout, see sheet 17 of 26.

FILE NAME: \\Oates-fs02\data\P\220060 - I-64\Microstation\041-0077_0078\041007 7_0078-011-Bearing Details.dgn

OATES ASSOCIATES
www.oatesassociates.com
ILLINOIS DESIGN FIRM LICENSE NO.: 184.001115

USER NAME =	DESIGNED - ETH	REVISED -	
	CHECKED - KBC	REVISED -	
PLOT SCALE =	DRAWN - ETH	REVISED -	
PLOT DATE = 11/10/2022	CHECKED - KBC	REVISED -	

STATE OF ILLINOIS
DEPARTMENT OF TRANSPORTATION

BEARING DETAILS
SN 041-0077 (E.B.) & 041-0078 (W.B.)
SHEET 11 OF 26 SHEETS

F.A.I. RTE.	SECTION	COUNTY	TOTAL SHEETS	SHEET NO.
64	(41-6,41-6-1,41-7)RS-2,BSMART 2023	JEFFERSON	1052	391
		CONTRACT NO. 78604		
		ILLINOIS	FED. AID PROJECT	



FRONT FACE
(Looking West)

SN 041-0077 WEST ABUTMENT

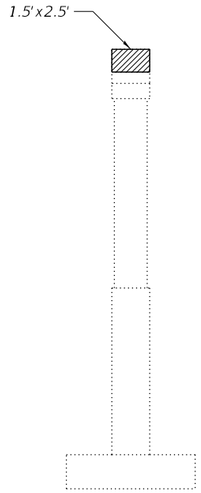

SOUTH END
(Looking North)

SN 041-0077 PIER 2

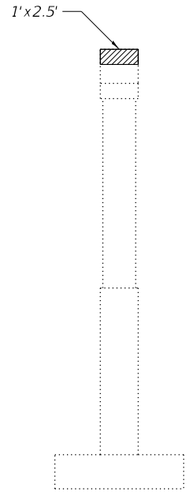

SOUTH END
(Looking North)

SN 041-0077 PIER 3

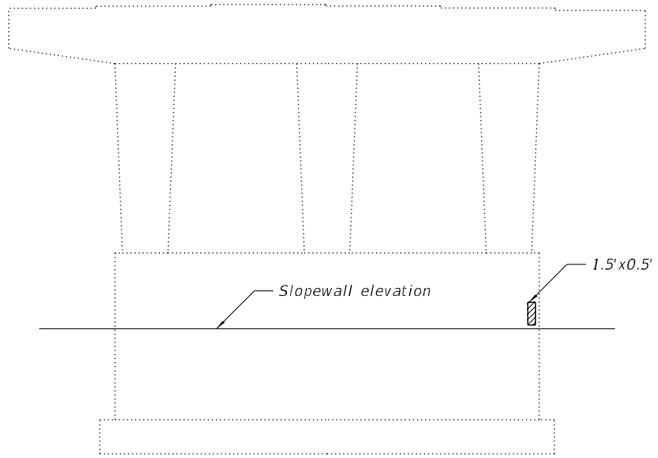

WEST FACE
(Looking East)

SN 041-0077 PIER 1

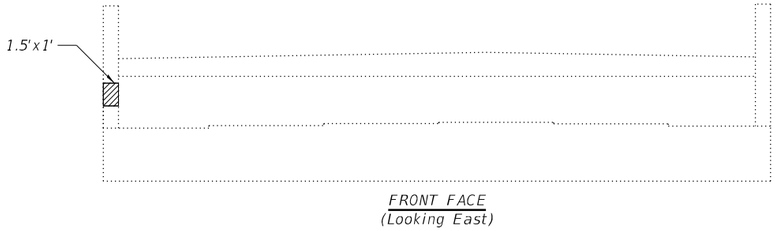

FRONT FACE
(Looking East)

SN 041-0078 EAST ABUTMENT



FRONT FACE
(Looking West)

SN 041-0078 WEST ABUTMENT

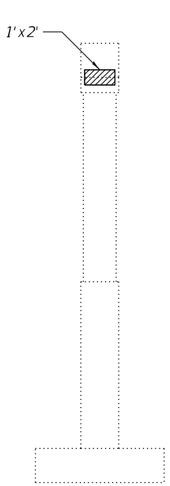

SOUTH END
(Looking North)

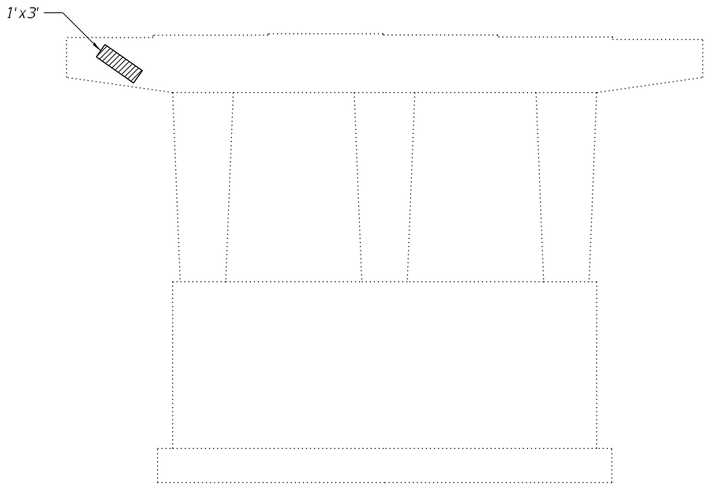

EAST FACE
(Looking West)

SN 041-0078 PIER 1

Structural Repair of Concrete (Depth Equal To or Less Than 5 Inches)

BILL OF MATERIAL

(2)	Structural Repair of Concrete (Depth Equal To or Less Than 5 Inches)	Sq. Ft.	20

Notes:
1. The Resident Engineer will determine final repair locations and quantities in the field after loose and spalled concrete has been removed.
2. Including an additional 4 sq. ft. for areas not visually identified in the field.

FILE NAME: H:\PX220060 - I-64\Microstation\041-0077_0078\041-0077_0078-012-Substructure Repairs.dgn

OATES ASSOCIATES
www.oatesassociates.com
ILLINOIS DESIGN FIRM LICENSE NO.: 184.001115

USER NAME =		DESIGNED - ETH	REVISED -
		CHECKED - KBC	REVISED -
PLOT SCALE =		DRAWN - ETH	REVISED -
PLOT DATE =	11/4/2022	CHECKED - KBC	REVISED -

STATE OF ILLINOIS
DEPARTMENT OF TRANSPORTATION

SUBSTRUCTURE REPAIRS
SN 041-0077 (E.B.) & 041-0078 (W.B.)
SHEET 12 OF 26 SHEETS

F.A.I. RTE.	SECTION	COUNTY	TOTAL SHEETS	SHEET NO.
64	(41-6,41-6-1,41-7)RS-2,BSMART 2023	JEFFERSON	1052	392
		CONTRACT NO. 78604		
		ILLINOIS	FED. AID PROJECT	

GENERAL NOTES

Plan dimensions and details relative to existing plans are subject to nominal construction variations. The Contractor shall field verify existing dimensions and details affecting new construction and make necessary approved adjustments prior to construction or ordering of materials. Such variations shall not be cause for additional compensation for a change in scope of the work, however, the Contractor will be paid for the quantity actually furnished at the unit price bid for the work.

Reinforcement bars designated (E) shall be epoxy coated.

Prior to pouring the new concrete deck, all heavy or loose rust, loose mill scale, and other loose or potentially detrimental foreign material shall be removed from the surfaces in contact with concrete. Tightly adhered paint may remain unless otherwise noted. Removal shall be accomplished by methods that will not damage the steel and the cost will be included in the pay item covering removal of the existing concrete.

Existing reinforcement bars extending into the removal area shall be cleaned, straightened and incorporated into the new construction. Any reinforcement bars that are damaged during concrete removal shall be replaced with an approved bar splicer or anchorage system. Cost included with Concrete Removal.

Joint openings shall be adjusted according to Article 520.04 of the Std. Specs. when the deck is poured at an ambient temperature other than 50° F.



ELEVATION

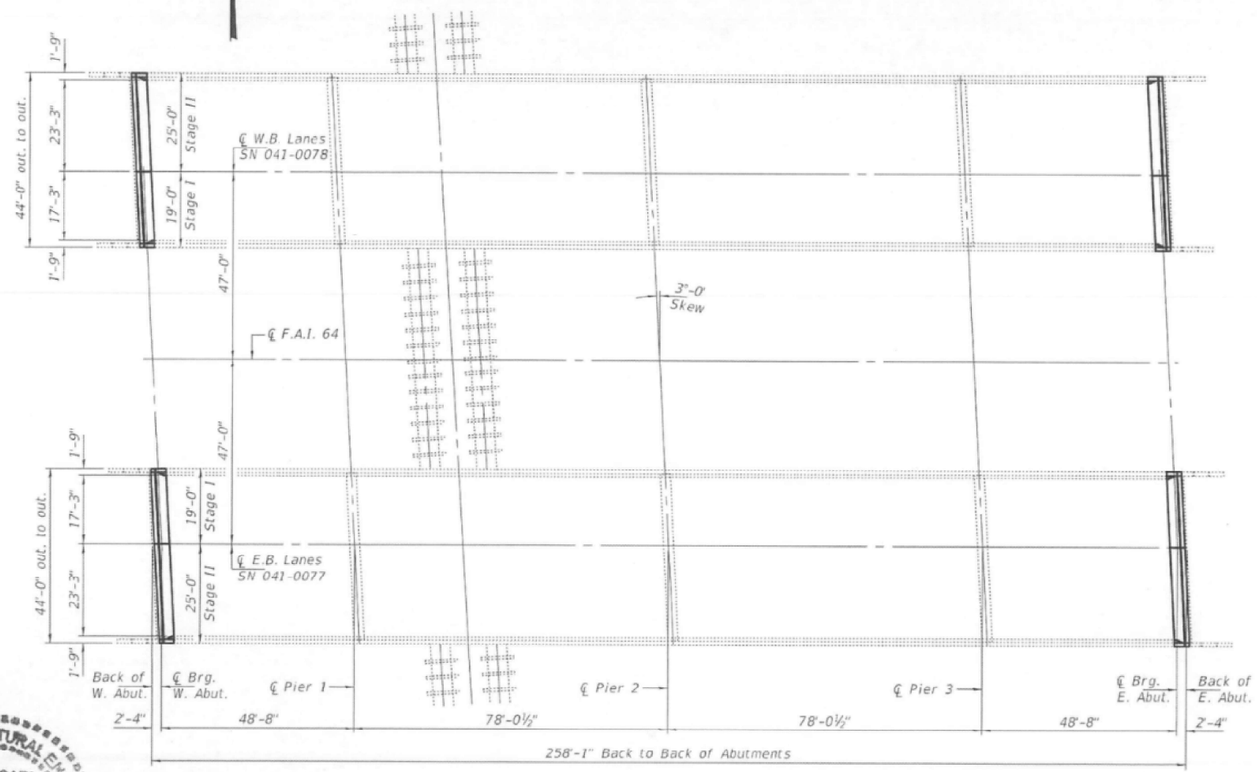

PLAN

LICENSED STRUCTURAL ENGINEER
DAVID CARL PUZEY
081-003170
SPRINGFIELD
ILLINOIS
STATE OF ILLINOIS

Expires: November 30, 2020

TOTAL BILL OF MATERIAL

	ITEM	UNIT	QUANTITY
	Concrete Removal	Cu. Yd.	26.4
	Concrete Superstructure	Cu. Yd.	26.7
	Reinforcement Bars, Epoxy Coated	Pound	3800
	Bar Splicers	Each	56
	Preformed Joint Strip Seal	Foot	166
*	Protective Coat	Sq. Yd.	76

* New Concrete Only.

DESIGNED - Hameed Salih	EXAMINED	DATE - DECEMBER 5, 2018	STATE OF ILLINOIS DEPARTMENT OF TRANSPORTATION
CHECKED -	PASSED	REVISED -	GENERAL PLAN & ELEVATION F.A.I. ROUTE 64 OVER RAILROAD & C.H. 15 SN 041-0077 (E.B.) & -0078 (W.B.)
DRAWN - STEFFEN	ENGINEER OF CONSTRUCTURAL SERVICES	REVISED -	SHEET 1 OF 5 SHEETS
CHECKED - HSS 1SB	ENGINEER OF BRIDGES AND STRUCTURES		

F.A.I. RTE.	SECTION	COUNTY	TOTAL SHEETS	SHEET NO.
64	D9 BRIDGE REPAIR 2019-4	JEFFERSON	61	53
		CONTRACT NO. 78650		
	ILLINOIS FED. AID PROJECT			

FILE NAME: H:\PA220060 - I-64\Microstation\041-0077_0078\041077_0078-013-Existing Plans.dgn

OATES ASSOCIATES
www.oatesassociates.com
ILLINOIS DESIGN FIRM LICENSE NO.: 184.001115

USER NAME =	DESIGNED -	REVISED -
	CHECKED -	REVISED -
PLOT SCALE =	DRAWN -	REVISED -
PLOT DATE = 11/3/2022	CHECKED -	REVISED -

STATE OF ILLINOIS
DEPARTMENT OF TRANSPORTATION

EXISTING PLANS
SN 041-0077 (E.B.) & 041-0078 (W.B.)
SHEET 13 OF 26 SHEETS

F.A.I. RTE.	SECTION	COUNTY	TOTAL SHEETS	SHEET NO.
64	(41-6,41-6-1,41-7)RS-2,BSMART 2023	JEFFERSON	1052	393
		CONTRACT NO. 78604		
	ILLINOIS FED. AID PROJECT			

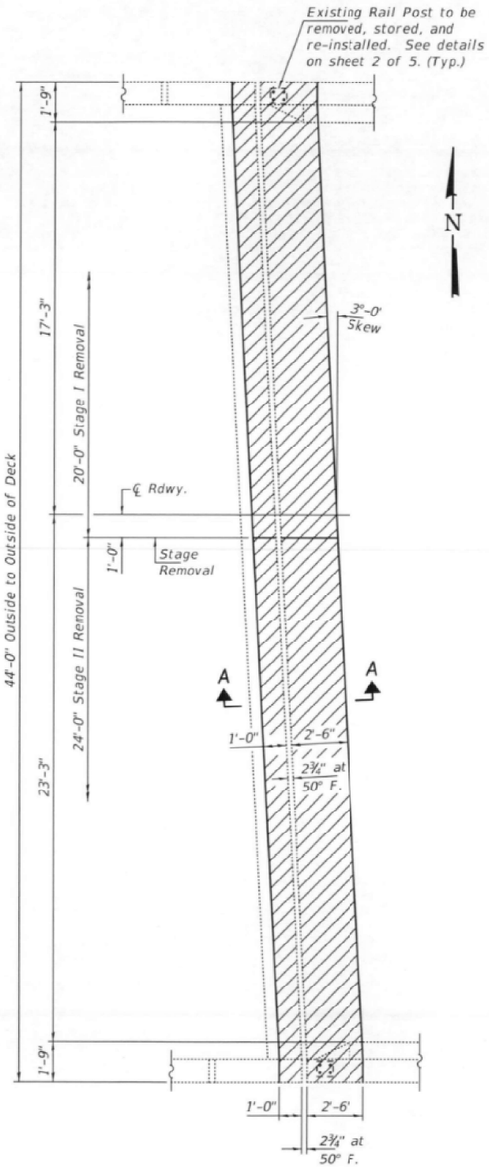

CONCRETE REMOVAL PLAN

SN 041-0077 W. Abut. shown; E. Abut. similar.
SN 041-0078 similar by 180° rotation.

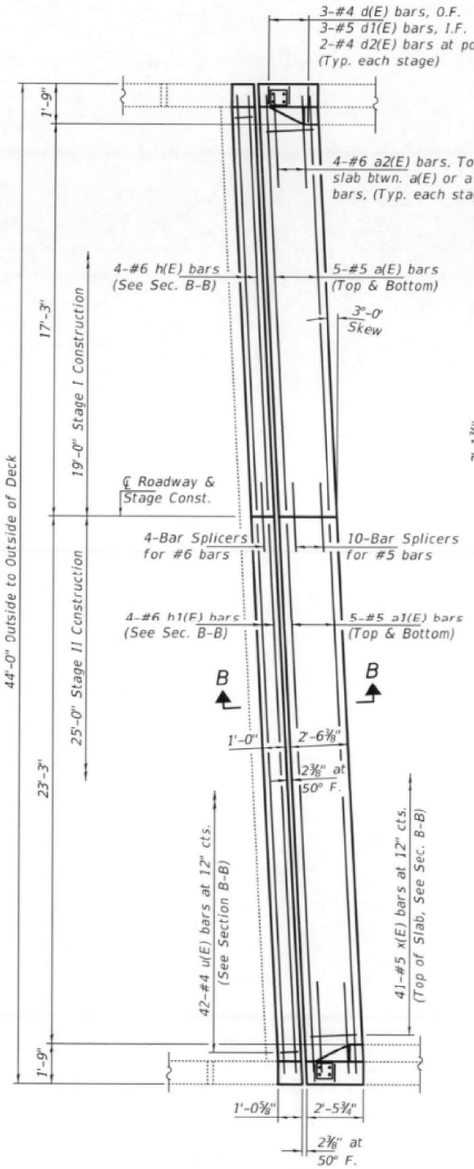

CONCRETE REPLACEMENT PLAN

SN 041-0077 W. Abut. shown; E. Abut. similar.
SN 041-0078 similar by 180° rotation.

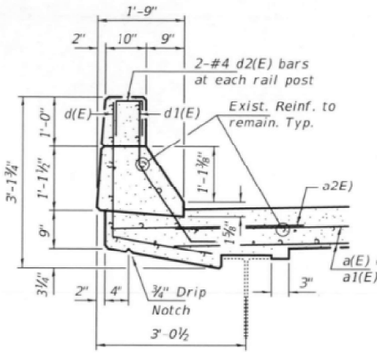

TYPICAL PARAPET SECTION

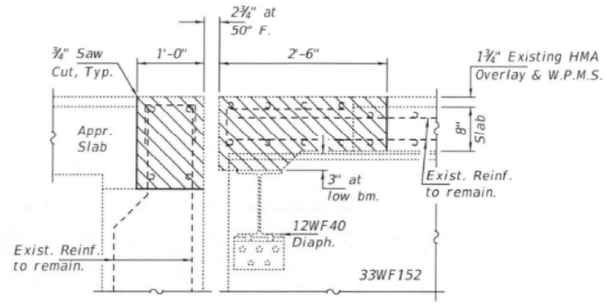

SECTION A-A

(Dims. at Rt. ℄'s)

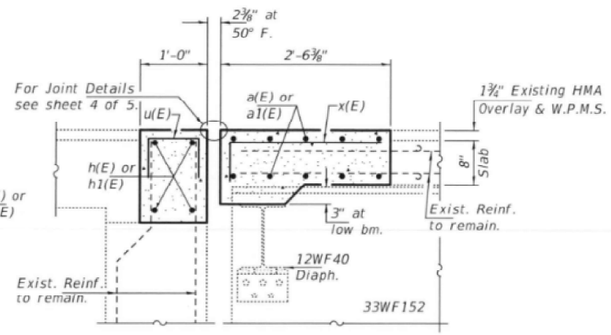

SECTION B-B

(Dims. at Rt. ℄'s)

Note:
Hatched areas indicate concrete removal.

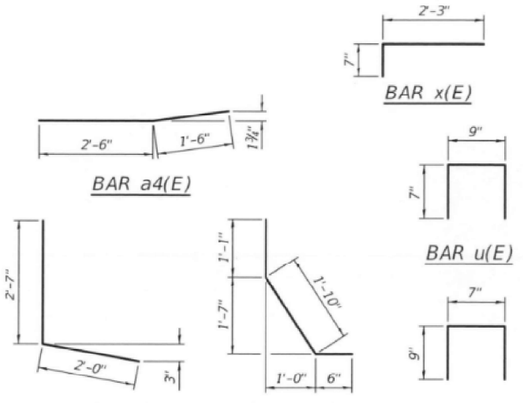

BILL OF MATERIAL

Bar	No.	Size	Length	Shape
a(E)	40	#5	17'-2"	
a1E)	40	#5	23'-2"	
a2E)	32	#6	4'-0"	
d(E)	24	#5	4'-7"	
d1(E)	24	#4	3'-5"	
d2(E)	16	#4	2'-1"	
h(E)	16	#6	18'-6"	
h1E)	16	#6	24'-6"	
uE)	168	#4	1'-11"	
x(E)	164	#5	2'-10"	
Concrete Removal			Cu. Yd.	26.4
Concrete Superstructure			Cu. Yd.	26.7
Bar Splicers			Each	56
Reinforcement Bars, Epoxy Coated			Pound	3800

DESIGNED - HSS	EXAMINED	DATE - DECEMBER 5, 2018	STATE OF ILLINOIS DEPARTMENT OF TRANSPORTATION
CHECKED - JSB	Timothy A. Bollenbacher, ENGINEER OF STRUCTURAL SERVICES		
DRAWN - STEFFEN	PASSED J. Carl Poppy, ENGINEER OF BRIDGES AND STRUCTURES	REVISED -	
CHECKED - HSS JSB		REVISED -	

JOINT REMOVAL & REPLACEMENT DETAILS
SN 041-0077 (E.B.) & -0078 (W.B.)
SHEET 3 OF 5 SHEETS

F.A.I. RTE.	SECTION	COUNTY	TOTAL SHEETS	SHEET NO.
64	D9 BRIDGE REPAIR 2019-4	JEFFERSON	61	55
		CONTRACT NO. 78650		
	ILLINOIS FED. AID PROJECT			

FILE NAME: H:\P220060 - I-64\Microstation\041-0077_0078\041-0077_0078-014-Existing Plans.dgn

OATES ASSOCIATES
www.oatesassociates.com
ILLINOIS DESIGN FIRM LICENSE NO.: 184.001115

USER NAME =	DESIGNED -	REVISED -	STATE OF ILLINOIS DEPARTMENT OF TRANSPORTATION
	CHECKED -	REVISED -	
PLOT SCALE =	DRAWN -	REVISED -	
PLOT DATE = 11/3/2022	CHECKED -	REVISED -	

EXISTING PLANS
SN 041-0077 (E.B.) & 041-0078 (W.B.)
SHEET 14 OF 26 SHEETS

F.A.I. RTE.	SECTION	COUNTY	TOTAL SHEETS	SHEET NO.
64	(41-6,41-6-1,41-7)RS-2,BSMART 2023	JEFFERSON	1052	394
		CONTRACT NO. 78604		
	ILLINOIS FED. AID PROJECT			

STATE OF ILLINOIS
DEPARTMENT OF TRANSPORTATION

F.A.I. RTE.	SECTION	COUNTY	TOTAL SHEETS	SHEET NO.
64	*	JEFFERSON	58	17
FED. ROAD DIST. NO. 7	ILLINOIS	FED. AID PROJECT NO.		

* D-7 BRIDGE DECK REPAIR 1999-1

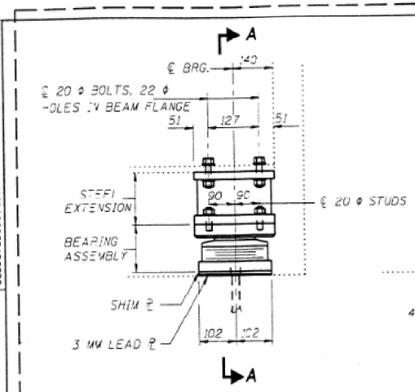

ELEVATION AT ABUTMENT

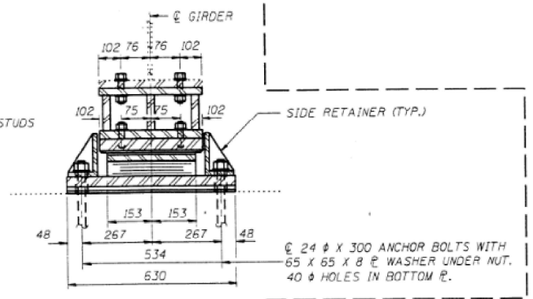

SECTION A-A

TYPE II TFE ELASTOMERIC EXP. BRG.

1

GIRDER REACTIONS

R℄	(KN)	91.6
R℄	(KN)	167.7
IMP.	(KN)	48.6
R (TOTAL)	(KN)	307.8

NOTES

DIAPHRAGM REMOVAL AND REPLACEMENT MAY BE REQUIRED TO FACILITATE DRILLING HOLES. COST SHALL BE INCLUDED IN THE COST OF "FURNISHING AND ERECTING STRUCTURAL STEEL".
NEW STEEL EXTENSIONS, SIDE RETAINERS, SHIM ℄'S, CONNECTION BOLTS, AND ANCHOR BOLTS ARE INCLUDED IN "FURNISHING AND ERECTING STRUCTURAL STEEL".
SEE "ANCHOR BOLT DETAILS" SHEET FOR ANCHOR BOLT INSTALLATION.
PRIOR TO ORDERING ANY MATERIAL, THE CONTRACTOR SHALL VERIFY IN THE FIELD ALL BEARING HEIGHT AND SHIM THICKNESS DIMENSIONS.
MIN. JACK CAPACITY = 27.2 METRIC TONS.

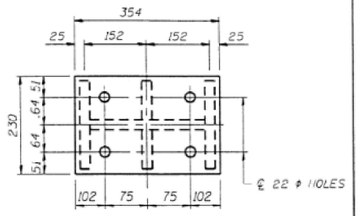

PLAN TOP AND BOTTOM PLATE

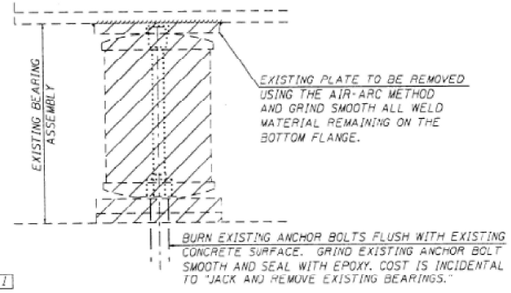

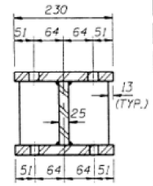

SECTION B-B

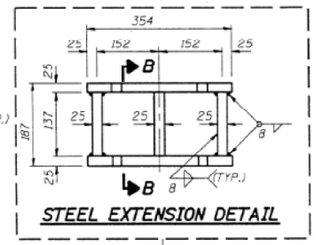

STEEL EXTENSION DETAIL

1

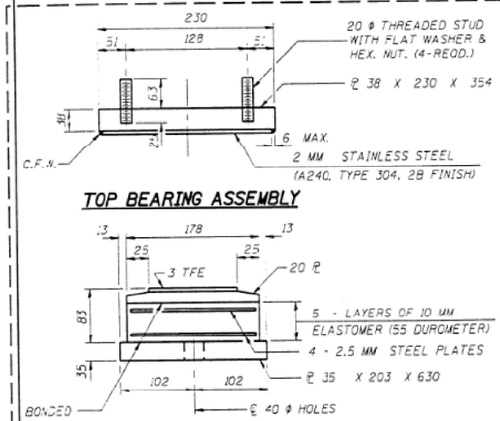

TOP BEARING ASSEMBLY

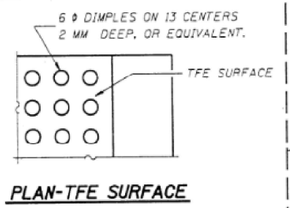

PLAN-TFE SURFACE

1

BOTTOM BEARING ASSEMBLY

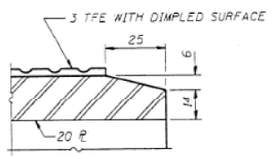

SECTION THRU TFE

EXISTING BEARING REMOVAL DETAIL

NOTE: THE 3 MM TFE SHEET SHALL BE BONDED DIRECTLY TO THE TOP STEEL PLATE WITH A TWO-COMPONENT, MEDIUM VISCOSITY EPOXY RESIN, CONFORMING TO THE REQUIREMENTS OF THE FEDERAL SPECIFICATION MMM-A-134, TYPE I. THE BOND AGENT SHALL BE APPLIED ON THE FULL AREA OF THE CONTACT SURFACES.

BONDING OF 3 MM TFE SHEET DURING VULCANIZING PROCESS WILL BE PERMITTED PROVIDED THE PROCESS AND METHOD OF ADJUSTING ASSEMBLY HEIGHT IS APPROVED BY THE ENGINEER.

BILL OF MATERIAL

ITEM	UNIT	TOTAL
ELASTOMERIC BEARING ASSEMBLY TYPE II	EACH	24

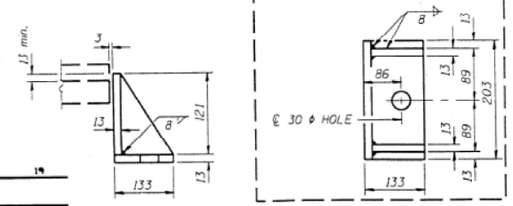

SIDE RETAINER

EQUIVALENT ROLLED ANGLE WITH STIFFENERS WILL BE ALLOWED IN LIEU OF WELDED PLATES.

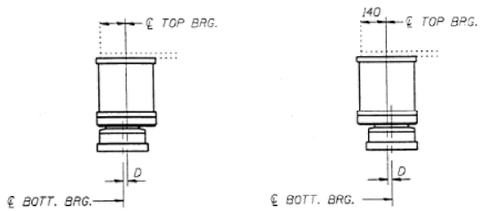

SETTING ANCHOR BOLTS AT EXP. BRG.

D=3 MM PER EACH 30.5 M OF EXPANSION FOR EVERY 15° TEMP. CHANGE FROM THE NORMAL TEMP. OF 50°F.

ESTIMATED WEIGHT OF STRUCTURAL STEEL PER BEARING - 74 KG.

REVISIONS NAME	DATE

ILLINOIS DEPARTMENT OF TRANSPORTATION
ELASTOMERIC BEARING DETAILS
EAST AND WEST ABUTMENTS
SN 041-0077 & 041-0078
LOCATION 2
DRAWN BY
DATE
CHECKED BY

DESIGNED	
CHECKED	
DRAWN	
CHECKED	

EXAMINED 19
ENGINEER OF STRUCTURAL SERVICES
PASSED
ENGINEER OF BRIDGES AND STRUCTURES

TYII/REPS 8-03-98

1 As Revised 4-16-99 VHV

TR 108A / BURLINGTON NORTHERN RR

DATE

1	2	3	4	5	6	7	8	9	$$DATE$$
10	11	12	13	14	15	16	17	18	
19	20	21	22	23	24	25	26	27	*DGN-SPEC*
28	29	30	31	32	33	34	35	36	
37	38	39	40	41	42	43	44	45	MMO REV: 09-01-98
46	47	48	49	50	51	52	53	54	
55	56	57	58	59	60	61	62	63	

EBT

c:\projects\jfs00004\94678eb.dgn Apr. 15, 1999 16:29:27

FILE NAME: H:\Pt220060 - I-64\Microstation\041-0077_0078\041\0077_0078-015-Existing Plans.dgn

OATES ASSOCIATES
www.oatesassociates.com
ILLINOIS DESIGN FIRM LICENSE NO.: 184.001115

USER NAME =		DESIGNED -	REVISED -
		CHECKED -	REVISED -
PLOT SCALE =		DRAWN -	REVISED -
PLOT DATE =	11/3/2022	CHECKED -	REVISED -

STATE OF ILLINOIS
DEPARTMENT OF TRANSPORTATION

EXISTING PLANS
SN 041-0077 (E.B.) & 041-0078 (W.B.)
SHEET 15 OF 26 SHEETS

F.A.I. RTE.	SECTION	COUNTY	TOTAL SHEETS	SHEET NO.
64	(41-6,41-6-1,41-7)RS-2,BSMART 2023	JEFFERSON	1052	395
		CONTRACT NO. 78604		
	ILLINOIS	FED. AID PROJECT		

ROUTE	SECTION	COUNTY	TOTAL SHEETS	SHEET NO.
F.A.I. 64	41-6HVB-1	JEFFERSON	28	6
FED. ROAD DIST. NO. 7	ILLINOIS	FED. AID PROJECT		

SHEET NO. 1
20 SHEETS

STATE OF ILLINOIS
DEPARTMENT OF PUBLIC WORKS & BUILDINGS
DIVISION OF HIGHWAYS

T.M.: R.R. Spike in Power Pole 348' Left of Sta. 2030+95 F.A.I. Rt. 64 - Elev. 537.38

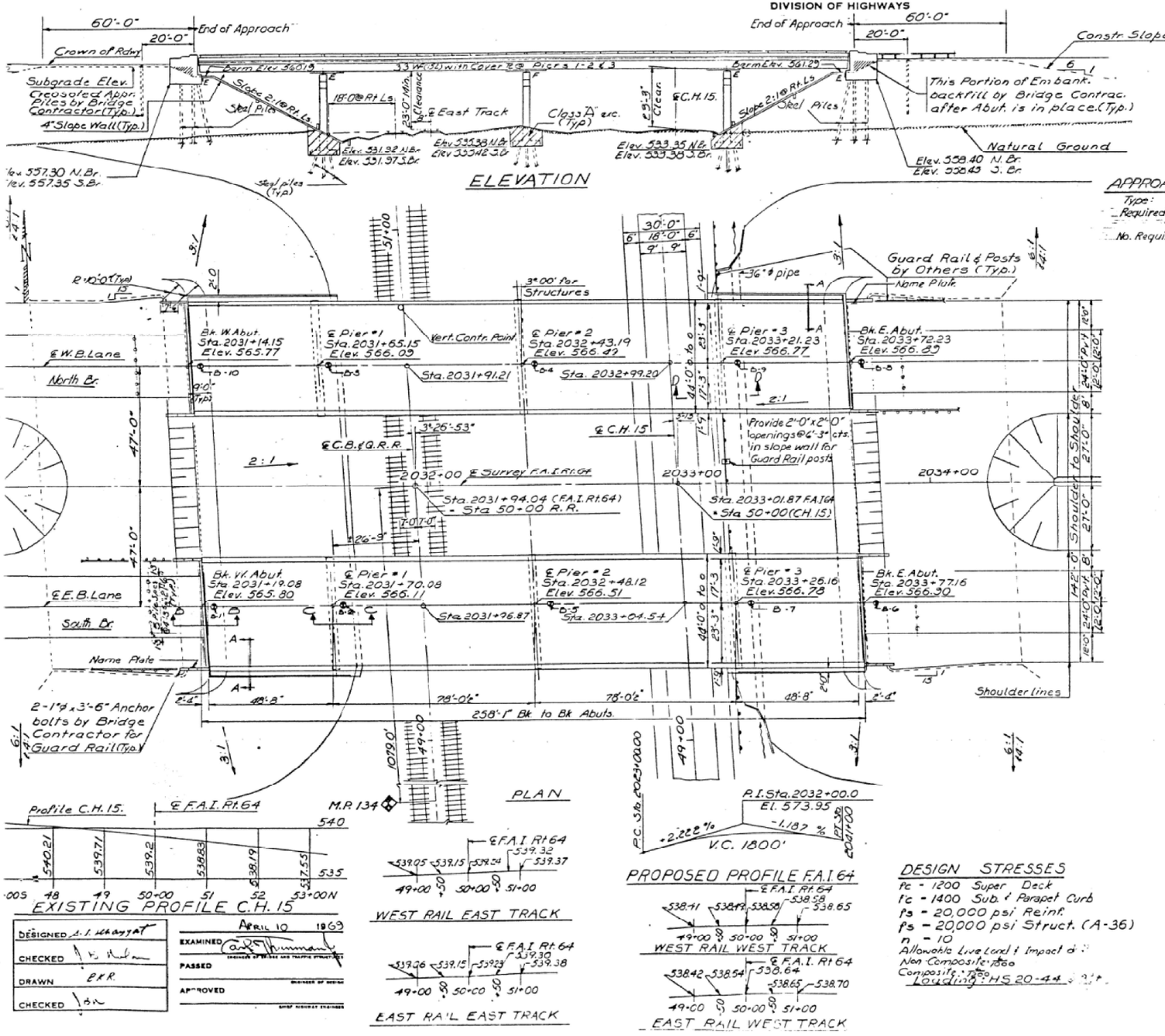

DESIGNED A. I. KHAYYAT
CHECKED
DRAWN E.K.R.
CHECKED

EXAMINED
PASSED
APPROVED
APRIL 10 1969

APPROACH PILE DATA

Type: Creosoted
Required Length: W. Abuts. - 24'-0"
E. Abuts. 22'-0"
No. Required: 24

GENERAL NOTES

All reinforcement bars shall be lapped 24 diameters unless otherwise shown.

Calculated weight of structural steel = 379410 Lbs

Field welding of construction accessories will not be permitted to the bottom flange of beams or girders nor to the top flange for a distance equal to one-fourth the span length each way from the pier supports. Field welding in other areas will be permitted only when approved by the Engineer.

Anchor bolts shall be set before fastening diaphragms over supports.

Slope wall shall be reinforced with welded wire fabric 6" x 6" mesh, weighing 58# per 100 sq. ft.

The embankment configuration shown shall be the minimum embankment that must be constructed prior to construction of the abutments.

The concrete rail section above the mandatory construction joint at the top of the slab shall be constructed of Class X Concrete, except the aggregates shall conform to the requirements of Handrail Concrete.

The Contractor shall drive 4 Steel test piles in a permanent location at the West Abut. North Bridge, East Abut. South Bridge, Pier 1 South Bridge & Pier 3 North Bridge as directed by the engineer before ordering the remainder of piles.

The Basic Lead Silico Chromate Paint system shall be used for shop and field painting of structural steel.

Fasteners shall be high strength bolts. Bolts ¾" ϕ; open holes 13/16" ϕ, unless otherwise noted.

Diaphragm connections may be adapted to shop welding subject to approval by the Engineer.

Class A Excavation for structures includes excavation for slope wall.

DESIGN STRESSES

fc = 1200 Super Deck
f'c = 1400 Sub. & Parapet Curb
fs = 20,000 psi Reinf.
fs = 20,000 psi Struct. (A-36)
n = 10
Allowable Live Load & Impact 4/3
Non Composite: 1860
Composite: 1700
Loading: HS 20-44

STATION 2031+94.04
BUILT 1970 BY
STATE OF ILLINOIS
F.A.I. RT. 64 SEC. 41-6HVB-1
F.A. PROJ. I-IG-64-3(12)
LOADING HS20 ALT.

Name Plate (see Std. 2113-1)

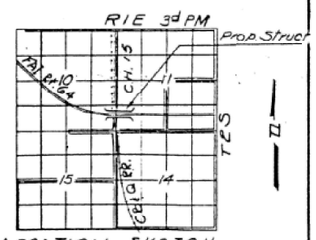

LOCATION SKETCH

GENERAL PLAN & ELEVATION
PROJECT: I-IG-64-3(12)62
F.A.I. Rt. 64 over C.B. & Q.R.R. & C.H. 15.
F.A.I. Rt. 64 - SECTION 41-6HVB-1
JEFFERSON CO.
STA. 2031 + 94.04

FILE NAME: H:\P\220060 - I-64\Microstation\041-0077_0078\041-0077_0078-016-Existing Plans.dgn

OATES ASSOCIATES
www.oatesassociates.com
ILLINOIS DESIGN FIRM LICENSE NO.: 184.001115

USER NAME =	DESIGNED -	REVISED -
	CHECKED -	REVISED -
PLOT SCALE =	DRAWN -	REVISED -
PLOT DATE = 11/3/2022	CHECKED -	REVISED -

STATE OF ILLINOIS
DEPARTMENT OF TRANSPORTATION

EXISTING PLANS
SN 041-0077 (E.B.) & 041-0078 (W.B.)
SHEET 16 OF 26 SHEETS

F.A.I. RTE.	SECTION	COUNTY	TOTAL SHEETS	SHEET NO.
64	(41-6,41-6-1,41-7)RS-2,BSMART 2023	JEFFERSON	1052	396
		CONTRACT NO. 78604		
	ILLINOIS	FED. AID PROJECT		

	41-6HV6-1	JEFFERSON	28	15

SHEET NO. 8
20 SHEETS

STATE OF ILLINOIS
DEPARTMENT OF PUBLIC WORKS & BUILDINGS
DIVISION OF HIGHWAYS

Note
Bars indicated thus 20 x 3-#5 etc. indicates 20 lines of bars with 3 lengths per line.
Min. bar laps = 24 dia.

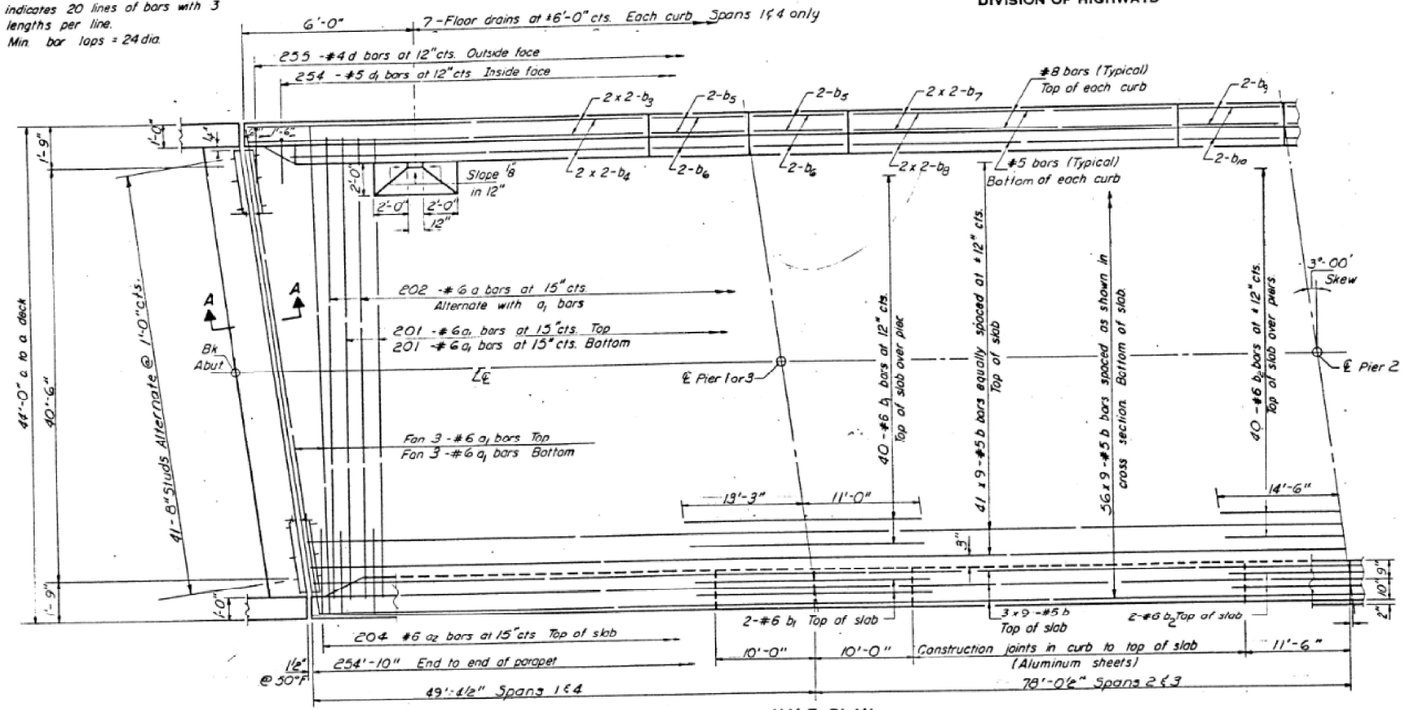

HALF PLAN

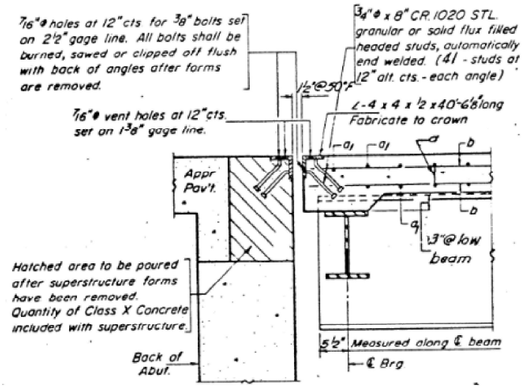

SECTION A-A

TWO BRIDGES
BILL OF MATERIAL

Bar	No.	Size	Length	Shape
a	404	#6	44'-1"	
a1	828	#6	42'-6"	
a2	816	#6	4'-0"	
b	1854	#5	29'-6"	
b1	176	#6	24'-3"	
b2	88	#6	29'-0"	
b3	32	#8	20'-6"	
b4	32	#5	20'-3"	
b5	32	#8	9'-9"	
b6	32	#5	9'-9"	
b7	32	#8	29'-3"	
b8	32	#5	28'-9"	
b9	16	8	11'-3"	
b10	16	5	11'-3"	
d	1020	#4	1'-7"	
d1	1016	#5	3'-2"	
d2	288	#4	2'-1"	
Reinforcement Bars			Lbs.	166650
Class X Concrete			Cu Yds.	644.6
Stud Shear Connectors			Ea.	3744

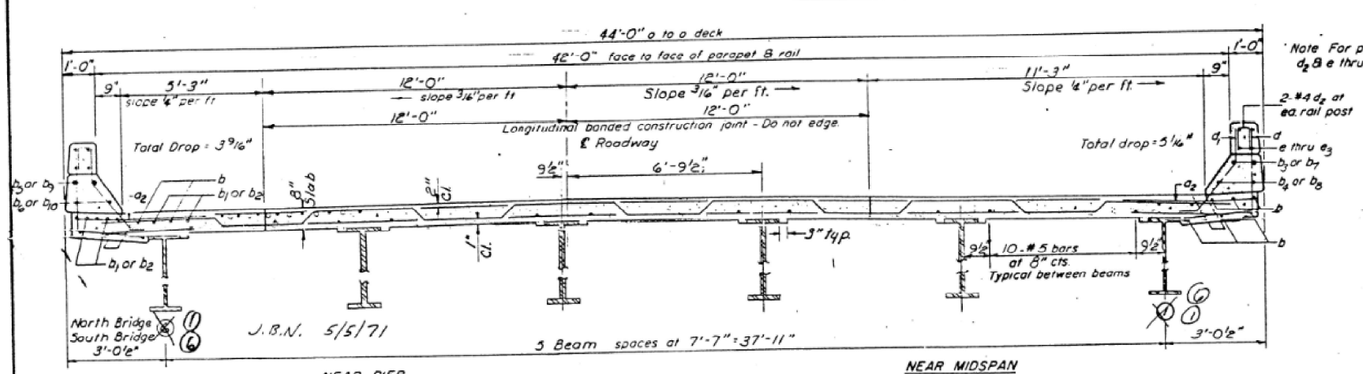

CROSS SECTION
LOOKING West (North Bridge)
LOOKING East (South Bridge)

Note For placement of bars d2 B e thru e3 see sheet # 9

2-#4 d2 at ea. rail post
d
e thru e3
b3 or b7
b4 or b8
b
b
a2

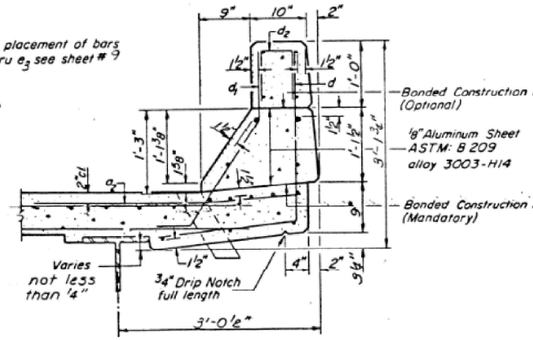

CURB SECTION
Cost of Aluminum Drains and Sheets shall be incidental to Class X Concrete

9" Aluminum Sheet ASTM: B 209 alloy 3003-H14

The lengths and quantities of longitudinal reinforcement and Class X Concrete in parapets are not included in above quantities. See sheet # 9

SUPERSTRUCTURE -- NORTH & SOUTH BRIDGES
FAI RT 64 SEC. 41-6HV6-1
JEFFERSON COUNTY
STA 203+94.04

DESIGNED	A.Y. Khayyat
CHECKED	J.B. Nelson
DRAWN	Bev Robinson
CHECKED	J.B.N.

1-4 to 6-R (≤15°) 3-1-68

EXAMINED April 10 1968
PASSED
APPROVED
ENGINEER OF BRIDGES
CHIEF HIGHWAY ENGINEER

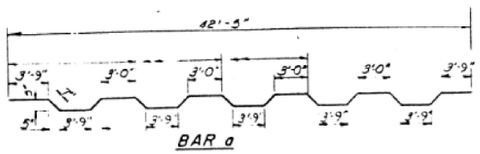

BAR a

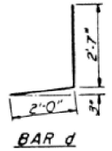

BAR d



BAR d1

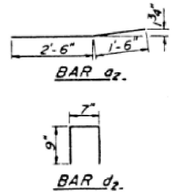

BAR d2

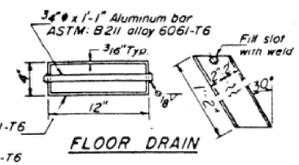

FLOOR DRAIN

Aluminum Sheets Welded ASTM: B209 alloy 6061-T6 or Aluminum Extrusions ASTM: B221 alloy 6061-T6

STATE OF ILLINOIS
DEPARTMENT OF PUBLIC WORKS & BUILDINGS
DIVISION OF HIGHWAYS

ROUTE NO.	MILEAGE	COUNTY	TOTAL SHEETS	SHEET NO.
F.A.S. F.A.U. 64	41-6HVB-1	JEFFERSON	28	14

SHEET NO. 9
20 SHEETS

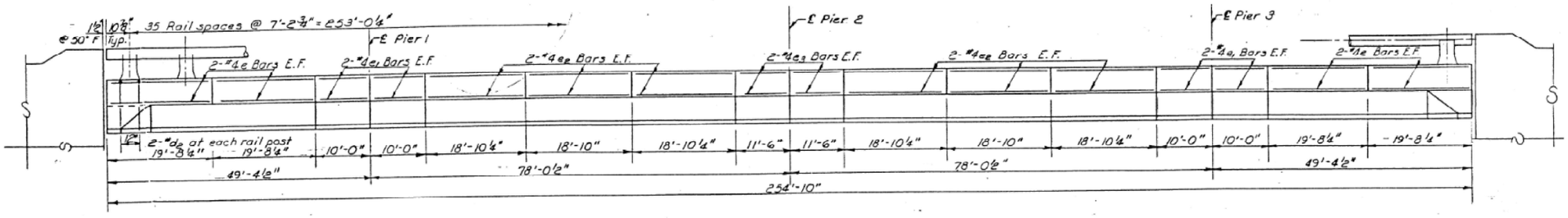

ELEVATION

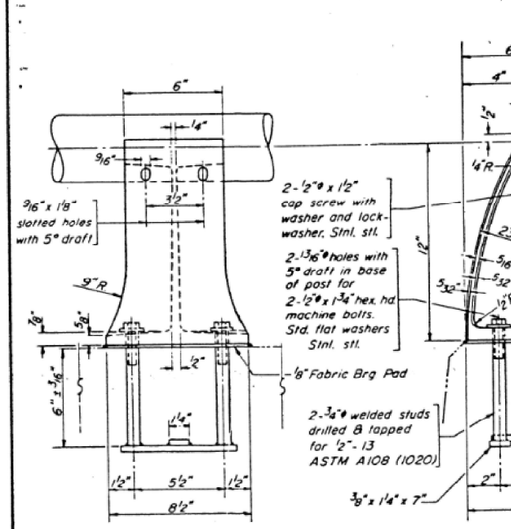

RAIL POST DETAILS

CAST END CAP
DRIVE FIT TYPE
8 Required

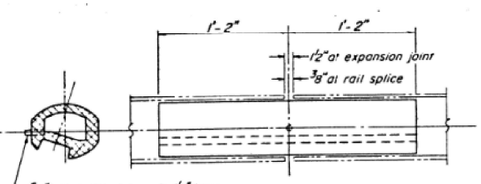

RAIL SPLICE

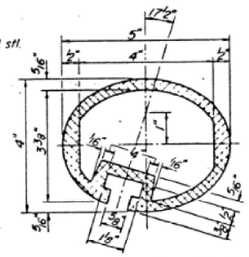

SEC. THRU ELLIPTICAL RAIL SECTION

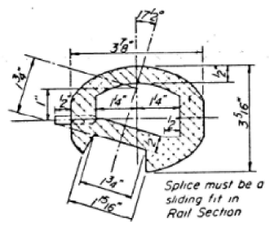

SEC. THRU SPLICE

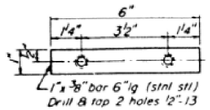

CLAMP BAR

Two component non-staining gray sealing compound with polysulfide liquid polymers- gun grade with primer.

1/2" Preformed Cork Asphalt Joint Filler. (meets qualifications for ASTM: Designation D 1751) Cost incidental.

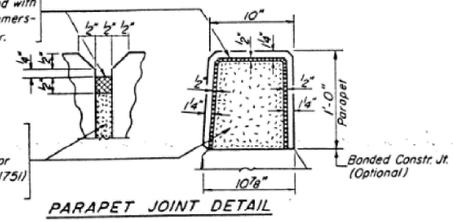

PARAPET JOINT DETAIL

NOTES:

All Aluminum Alloy Extruded Rail shall be supplied in modular lengths of 30 feet, except at the end of bridge or over open joints in bridge deck where the rail shall be attached to a minimum of 2 posts. If the rail is on a horizontal curve of 2300 foot radius or less, the modular lengths may be reduced but shall be attached to a minimum of 2 posts.

All joints in rail shall be spliced per detail.

Provide 1 - 1/8" and 2 - 1/16" Aluminum Shims for 25% of the Posts. Rail element shall be parallel to Grade - high spots shall be ground and low spots shimmed.

Seal perimeter of base of post to parapet with two component non-staining gray sealing compound with polysulfide liquid polymers, gun grade with primer. Fabric Bearing Pad shall have same dimensions as base of post.

Aluminum alloy rail shall conform to ASTM B221 alloy 6061-T6 or 6351-T5 with min. yield 35 ksi, min. tensile 38 ksi, and elongation of 10% in 2 inches.

PARAPETS & RAILS
BILL OF MATERIAL

Bar	No.	Size	Length	Shape
e	61	#4	19'-5"	
e1	64	#4	9'-9"	
e2	96	#4	18'-7"	
e3	32	#4	11'-3"	
Reinforcement Bars			Lbs.	2680
Class X Concrete			Cu. Yds.	32.8
Aluminum Railing			Lin. Ft.	1020

ALUMINUM RAILING
FAI. RT. 64 SEC. 41-6HVB-1
JEFFERSON COUNTY
STA. 2091+94.04

DESIGNED	A. Y. Khayyat
CHECKED	J. B. Nelson
DRAWN	Bev Robinson
CHECKED	J.H.K.

EXAMINED — APRIL 10 1969
PASSED
APPROVED

R-17 4-22-68

FILE NAME: H:\P220060 - I-64\Microstation\041-0077_0078\0410077_0078-018-Existing Plans.dgn

OATES ASSOCIATES
www.oatesassociates.com
ILLINOIS DESIGN FIRM LICENSE NO.: 184.001115

USER NAME =	DESIGNED -	REVISED -
	CHECKED -	REVISED -
PLOT SCALE =	DRAWN -	REVISED -
PLOT DATE = 11/3/2022	CHECKED -	REVISED -

STATE OF ILLINOIS
DEPARTMENT OF TRANSPORTATION

EXISTING PLANS
SN 041-0077 (E.B.) & 041-0078 (W.B.)
SHEET 18 OF 26 SHEETS

F.A.I. RTE.	SECTION	COUNTY	TOTAL SHEETS	SHEET NO.
64	(41-6,41-6-1,41-7)RS-2,BSMART 2023	JEFFERSON	1052	398
		CONTRACT NO. 78604		
		ILLINOIS	FED. AID PROJECT	

ROUTE NO.	SECTION	COUNTY	TOTAL SHEETS	SHEET NO.
S.B.I. A.A.R.64	41-6HVB-1	JEFFERSON	28	15
FED. ROAD DIST. NO. 7	ILLINOIS	FED. AID PROJECT		

SHEET NO. 10
20 SHEETS

STATE OF ILLINOIS
DEPARTMENT OF PUBLIC WORKS & BUILDINGS
DIVISION OF HIGHWAYS

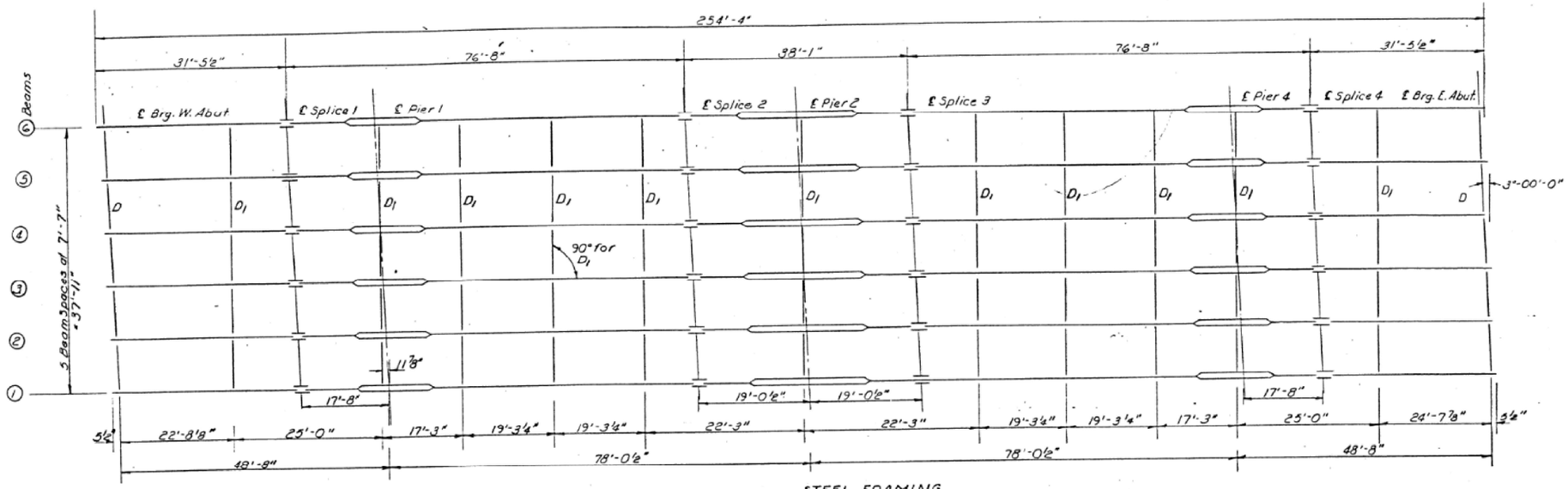

STEEL FRAMING

All beams 33 WF152
Composite Spans 2&3

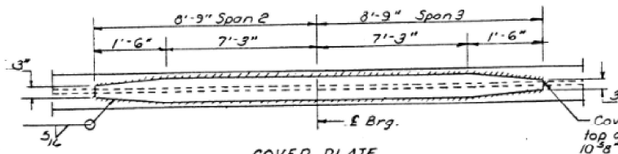

COVER PLATE

At Pier 2
No. Reqd. 12

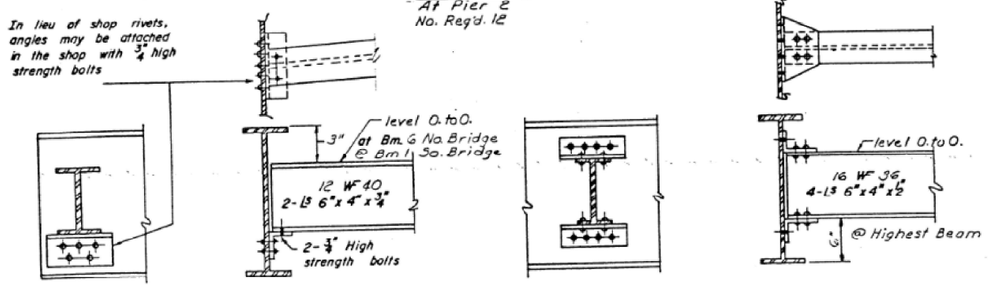

DIAPHRAGM D

Total 20 Required

DIAPHRAGM D1

Total 110 Required

Note: Diaphragm connections may be adapted to shop welding subject to approval by the Engineer.

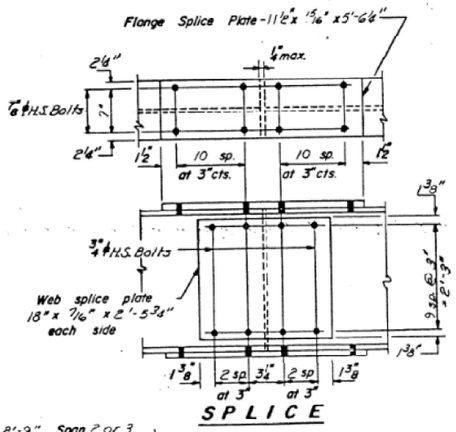

SPLICE

TOP OF FLANGE ELEVATIONS

	Bm. 1	Bm. 2	Bm. 3	Bm. 4	Bm. 5	Bm. 6
NORTH BRIDGE						
℄ Brg. W. Abut.	564.87	565.01	565.12	565.09	564.89	564.73
℄ Splice 1	564.99	565.13	565.24	565.15	565.01	564.85
℄ Brg. Pier 1	565.09	565.23	565.34	565.25	565.11	564.95
℄ Splice 2	565.43	565.57	565.68	565.59	565.45	565.29
℄ Brg. Pier 2	565.51	565.65	565.76	565.67	565.53	565.37
℄ Splice 3	565.59	565.73	565.84	565.75	565.61	565.45
℄ Brg. Pier 3	565.77	565.91	566.02	565.93	565.79	565.65
℄ Splice 4	565.82	565.96	566.07	565.98	565.84	565.69
℄ Brg. E. Abut.	565.97	566.11	566.22	566.13	565.99	565.83
SOUTH BRIDGE						
℄ Brg. W. Abut.	564.78	564.93	565.06	565.16	565.03	564.89
℄ Splice 1	564.90	565.05	565.18	565.28	565.13	565.01
℄ Brg. Pier 1	565.00	565.15	565.28	565.38	565.25	565.11
℄ Splice 2	565.33	565.48	565.61	565.71	565.58	565.44
℄ Brg. Pier 2	565.41	565.56	565.69	565.79	565.66	565.52
℄ Splice 3	565.49	565.64	565.77	565.87	565.74	565.60
℄ Brg. Pier 3	565.66	565.81	565.94	566.04	565.91	565.77
℄ Splice 4	565.71	565.86	565.99	566.09	565.96	565.82
℄ Brg. E. Abut.	565.86	566.01	566.14	566.24	566.11	565.97

* for fabrication only.

DESIGNED A. Y. Khayyat
CHECKED A. B. Robinson
DRAWN J. Schneller

APRIL 10 19 69
EXAMINED
PASSED
APPROVED

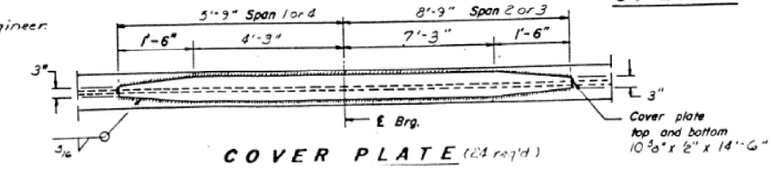

COVER PLATE (24 req'd)

STRUCTURAL STEEL
F.A.I. RT. 64 SEC. 41-6HVB-1
JEFFERSON COUNTY
STA. 2031+94.04

FILE NAME: H:\Pt220060 - I-64\Microstation\041-0077_007804100077_0078-019-Existing Plans.dgn

OATES ASSOCIATES
www.oatesassociates.com
ILLINOIS DESIGN FIRM LICENSE NO.: 184.001115

USER NAME =	DESIGNED -	REVISED -
	CHECKED -	REVISED -
PLOT SCALE =	DRAWN -	REVISED -
PLOT DATE = 11/3/2022	CHECKED -	REVISED -

STATE OF ILLINOIS
DEPARTMENT OF TRANSPORTATION

EXISTING PLANS
SN 041-0077 (E.B.) & 041-0078 (W.B.)
SHEET 19 OF 26 SHEETS

F.A.I. RTE.	SECTION	COUNTY	TOTAL SHEETS	SHEET NO.
64	(41-6,41-6-1,41-7)RS-2,BSMART 2023	JEFFERSON	1052	399
		CONTRACT NO. 78604		
	ILLINOIS	FED. AID PROJECT		

STATE OF ILLINOIS
DEPARTMENT OF PUBLIC WORKS & BUILDINGS
DIVISION OF HIGHWAYS

ROUTE NO.	SECTION	COUNTY	TOTAL SHEETS	SHEET NO.
F.A.I. RTE. 64	41-6HVB-1	JEFFERSON	28	16
FED. ROAD DIST. NO. 7	ILLINOIS	FED. AID PROJECT		

SHEET NO. 11
20 SHEETS

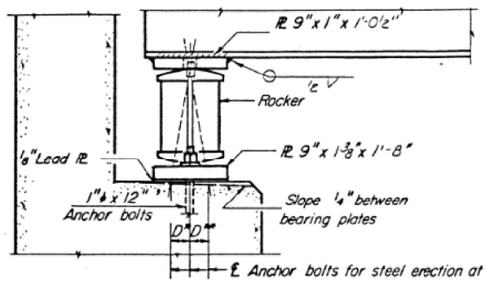

SECTION

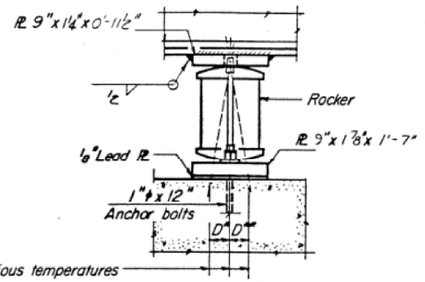

ELEVATION

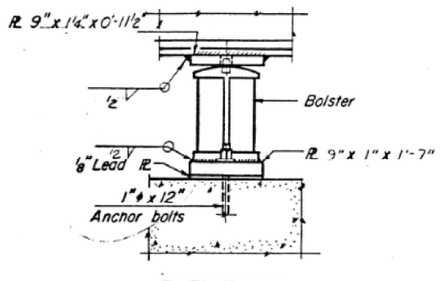

ELEVATION

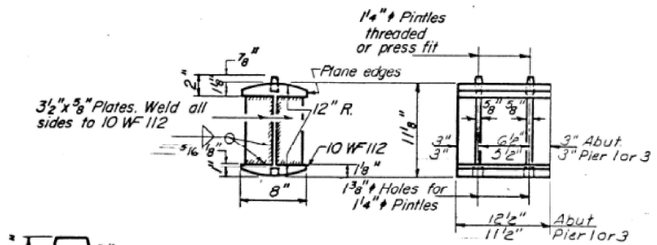

ROCKER
At Abutments, Pier 1 & Pier 3

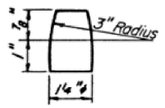

PINTLE

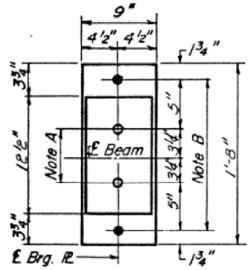

PLAN
AT ABUTMENT

NOTE A
1⅜"ϕ Holes – 1" deep in top ℝ for pintles. Thread or press fit pintles into bottom ℝ.

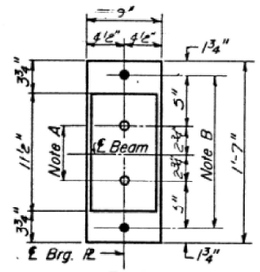

PLAN
AT PIER 1 or 3

NOTE B
1½"ϕ Holes for 1"ϕ anchor bolts. 2½" x 2½" x 5/16" ℝ. Washers under nut.

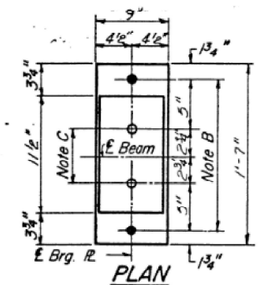

PLAN
AT PIER 2

NOTE C
1⅜"ϕ Holes 1" deep in top ℝ only for 1¼"ϕ pintles.

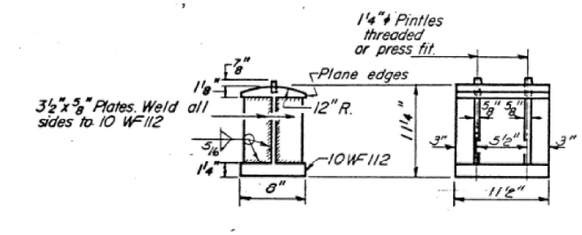

BOLSTER
At Pier 2

NOTES ON SETTING OF ANCHOR BOLTS AT EXP. BRGS.

a) D* (Side of brg. away from fixed brg.)
D* = ⅛" per each 100' of expansion for every 15° fall below the normal temp. of 50°F.
D** (Side of brg. toward fixed brg.)
D** = ⅛" per each 100' of expansion for every 15° rise above the normal temp. of 50°F.

b) After beams have been erected and dimensions D* or D** determined, holes shall be drilled and anchor bolts shall be grouted in place. All fixed anchor bolts may be built into the masonry.

BEARING ASSEMBLY DETAILS

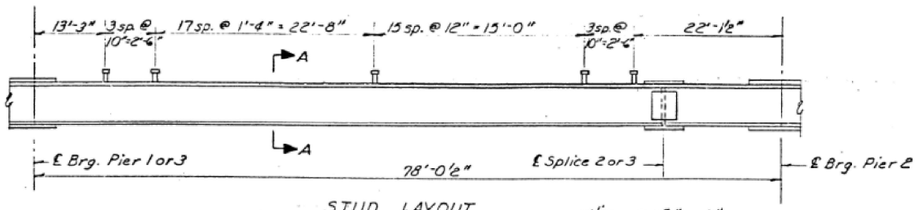

STUD LAYOUT
Span 2 or 3

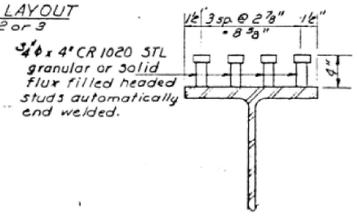

SECTION A-A

TABLE OF MOMENTS & REACTIONS
(Interior Beams)

	Moments (Ft. Kp.)				Reactions (Kips)		
	0.4 sp. 1	Pier 1	0.5 sp. 2	Pier 2	Abut	Pier 1	Pier 2
D.L.	109.8	-407.8	240.6	-572.6	14.98	62.09	79.14
S.D.L.	39.6	-109.9	97.2	-143.5	4.90	20.45	23.80
L.L.	326.3	-319.5	541.8	-384.8	37.97	51.03	56.29
Imp.	94.0	-85.3	133.3	-94.7	10.93	13.63	13.85
Total	569.7	-922.5	1012.9	-1195.6	68.78	-152.22	173.08

*Symm. about ℄ Pier 2

PROPERTIES

STEEL SECTION	
Is	8147.6 in⁴
STs	486.4 in³
SBs	486.4 in³
COMPOSITE SECTION	
Ic	19766.7 in⁴
STc	4475.1 in³
SBc	679.7 in³

DESIGNED	L.Y. Hannah		
CHECKED	J.D. Nolan	EXAMINED	APRIL 10 1965
DRAWN	Bev. Robinson, P.G. Barnett	PASSED	
CHECKED	J.B.L.	APPROVED	

I-2-8 9-1-65

STRUCTURAL STEEL
FAI RT. 64 SEC. 41-6HVB-1
JEFFERSON COUNTY
STA 203+1 - 24+04

FILE NAME: H:\P220060 - I-64\Microstation\041-0077_0078\0410077_0078-020-Existing Plans.dgn

OATES ASSOCIATES
www.oatesassociates.com
ILLINOIS DESIGN FIRM LICENSE NO.: 184.001115

USER NAME =	DESIGNED -	REVISED -
	CHECKED -	REVISED -
PLOT SCALE =	DRAWN -	REVISED -
PLOT DATE = 11/3/2022	CHECKED -	REVISED -

STATE OF ILLINOIS
DEPARTMENT OF TRANSPORTATION

EXISTING PLANS
SN 041-0077 (E.B.) & 041-0078 (W.B.)
SHEET 20 OF 26 SHEETS

F.A.I. RTE.	SECTION	COUNTY	TOTAL SHEETS	SHEET NO.
64	(41-6,41-6-1,41-7)RS-2,BSMART 2023	JEFFERSON	1052	400
		CONTRACT NO. 78604		
		ILLINOIS	FED. AID PROJECT	