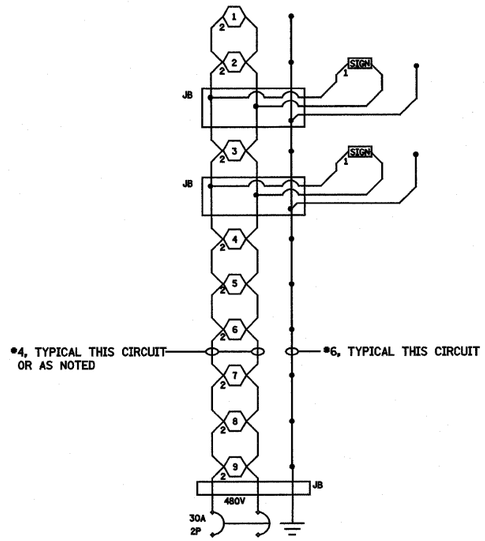

LIGHTING CKT 1 (PROPOSED)
PROPOSED LIGHTING CONTROLLER BASE MOUNTED

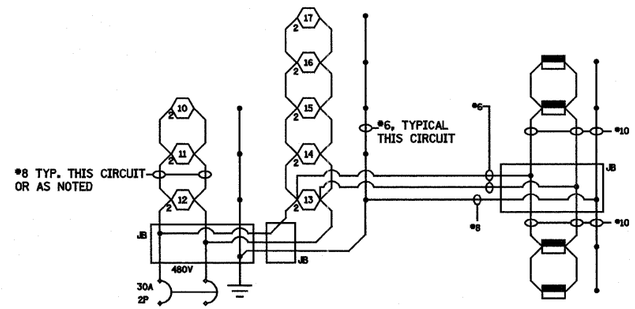

LIGHTING CKT 2 (PROPOSED)
PROPOSED LIGHTING CONTROLLER BASE MOUNTED

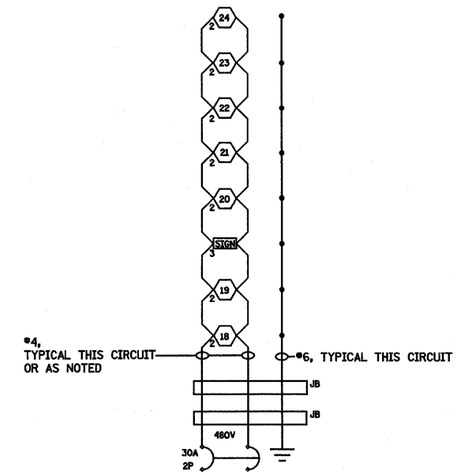

LIGHTING CKT 3 (PROPOSED)
PROPOSED LIGHTING CONTROLLER BASE MOUNTED

NOTES:

1. ALL NECESSARY REVISIONS TO THE WIRING SHOWN ON THIS SHEET SHALL BE MADE AT NO ADDITIONAL COST TO THE DEPARTMENT AND TO THE SATISFACTION OF THE ENGINEER.

400W PROPOSED LUMINAIRE

2 (2) 400W PROPOSED LUMINAIRES

SIGN SIGN LIGHTING, NUMBER OF 150W LUMINAIRES AS INDICATED

JUNCTION BOX

150W UNDERPASS LUMINAIRE

250W EXISTING OR PROPOSED LUMINAIRE

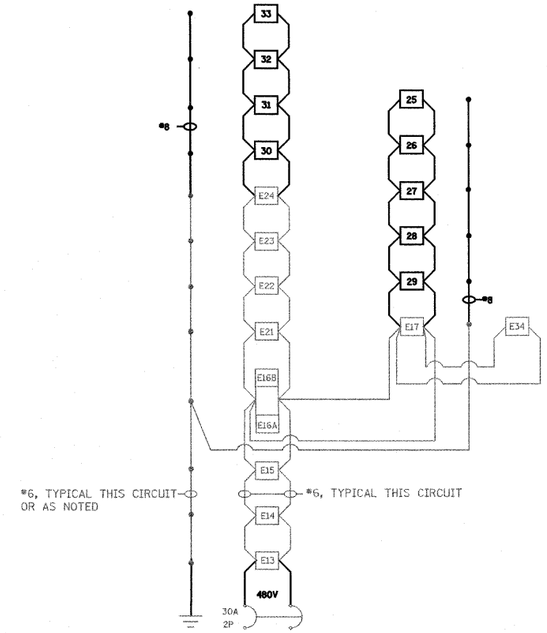

LIGHTING CKT 4 (EXISTING MODIFIED)
PROPOSED LIGHTING CONTROLLER BASE MOUNTED

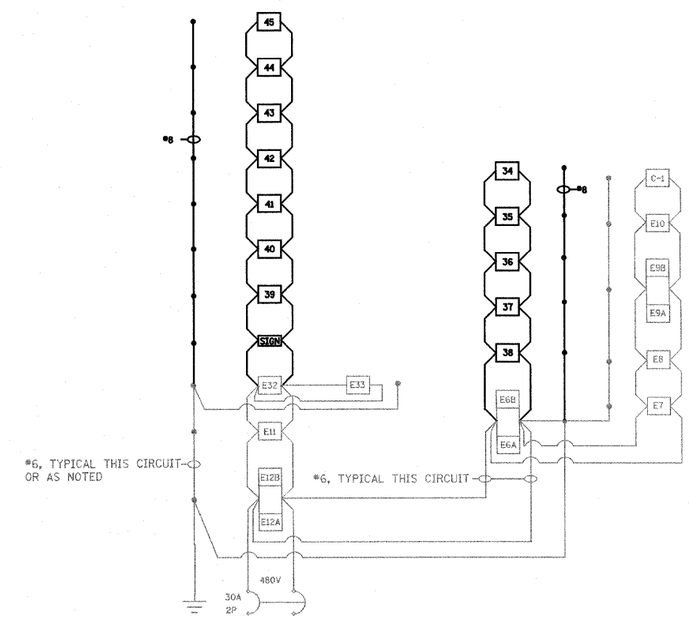

LIGHTING CKT 5 (EXISTING MODIFIED)
PROPOSED LIGHTING CONTROLLER BASE MOUNTED

FILE NAME = S:\Projects\403-00072_57-70\dgn\ML_Keller\lighting det11.dgn	USER NAME = paul	DESIGNED - VG	REVISED -	STATE OF ILLINOIS DEPARTMENT OF TRANSPORTATION	WIRING DIAGRAM (KELLER DRIVE CONTROLLER) FAI ROUTE 57/70	F.A.I. RTE.	SECTION	COUNTY	TOTAL SHEETS	SHEET NO.
		DRAWN - PDB	REVISED -			57/70	(25-3,4)R	EFFINGHAM	1098	325
	PLOT SCALE = 40.0000 ' / IN.	CHECKED - BRM	REVISED -					CONTRACT NO. 74299		
	PLOT DATE = 3/18/2011	DATE - 8-5-10	REVISED -		SCALE: SHEET NO. 27 OF 34 SHEETS STA. TO STA.	FED. ROAD DIST. NO.	ILLINOIS	FED. AID PROJECT		