99-00013-00-HP, Jersey County
97262
Sheet 16

2'X 2' ALUMINUM DECK PLATE			
NO.	QUAN.	DESCRIPTION	LENGTH
1	2	1 1/4"X 1 1/4"X 16 GA. SQ. TUBE	23 7/8"
2	2	1 1/4"X 1 1/4"X 16 GA. SQ. TUBE	19"
3	1	3/16" TREAD PLATE	23 7/8"X 23 7/8"

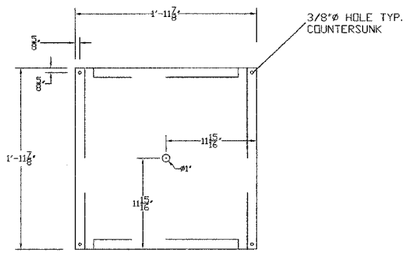

PLAN VIEW

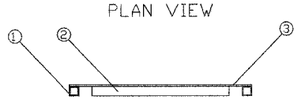

END VIEW

2'X 2' ALUMINUM DECK PLATE

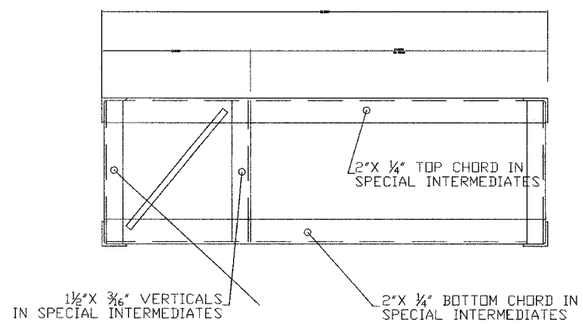

CROSS SECTION FF

*** THIS ARRANGEMENT OF ROUND ROD AND ANGLES ALSO APPLIES TO THE STANDARD INTERMEDIATES IN THIS RUN OF SECTIONS. ***

*** THIS MATERIAL CONSTRUCTION & ARRANGEMENT ALSO APPLIES TO THE END MEMBERS IN THIS RUN OF SECTIONS ***INSIDE THE BUILDING WALLS***. ***

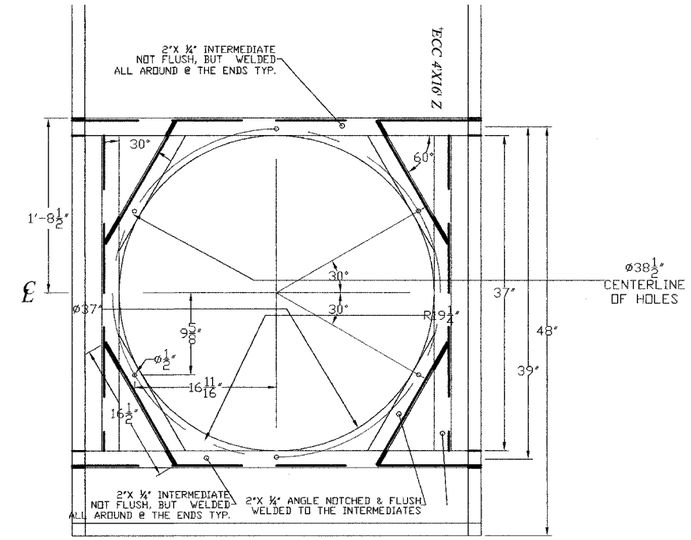

DETAIL @ TANK HATCH

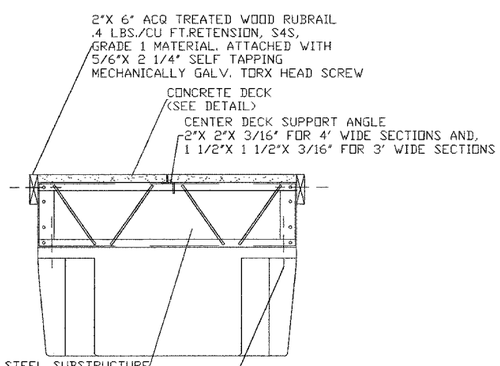

CROSS SECTION GG01-C2-R1
REV. 09/23/99

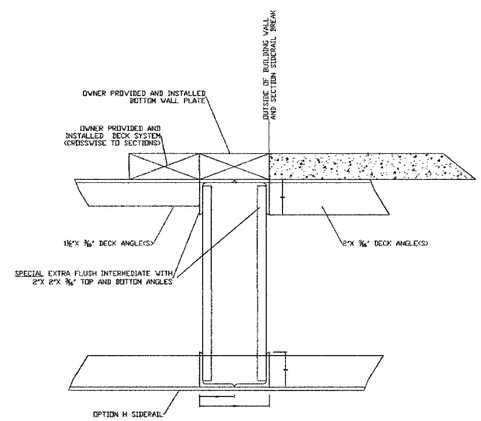

CROSS SECTION BB

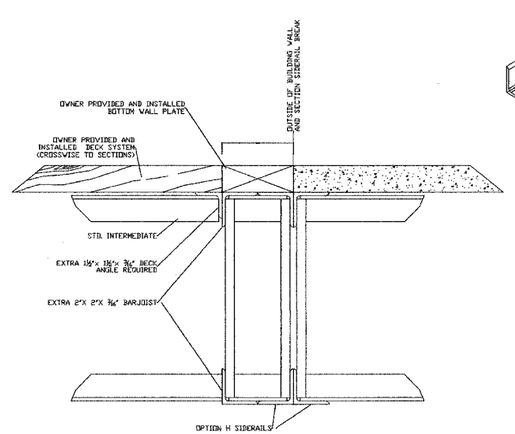

CROSS SECTION AA

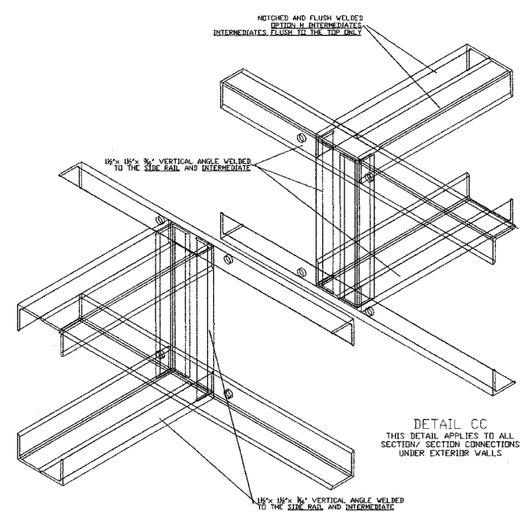

DETAIL CC
THIS DETAIL APPLIES TO ALL SECTION/ SECTION CONNECTIONS UNDER EXTERIOR WALLS

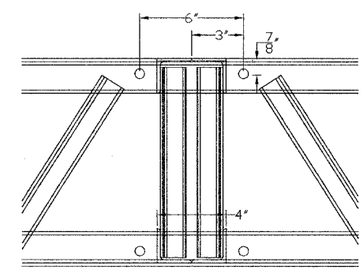

FRONT VIEW OF DETAIL CC

NOTE:
AT LOW WATER CONDITIONS SOME SLIPS MAY BE UNUSABLE DUE TO SHALLOW BOTTOM INTERFERENCE WITH BOAT LIFTS, BRACING OR SOME ANCHORING COMPONENTS. IF SO REQUESTED DESIGN CHANGES MAY BE POSSIBLE TO RESOLVE THESE ISSUES. GALVA-FOAM RECOMMENDS THAT LENGTH OF RAMP BE SUFFICIENT TO FLOAT DOCK DURING LOW WATER SITUATIONS. IF A LONGER RAMP IS REQUIRED THERE WILL BE AN ADJUSTMENT TO THE CONTRACTED PRICE. RAMP LENGTH / WATER DEPTH HAVE NOT BEEN VERIFIED AT THIS SITE BY A GALVA-FOAM REPRESENTATIVE AT THIS TIME. OWNER IS RESPONSIBLE TO SAFEGUARD STRUCTURE IN COMPLIANCE WITH OPERATIONS AND MAINTENANCE MANUAL.

DESIGN SPECIFICATIONS:
(APPLICABLE TO ALL MARINE STRUCTURES UNLESS SPECIFIED OTHERWISE BY OWNER IN CONTRACT)
HORIZONTAL WIND LOAD - 80 M.P.H. BASIC WIND SPEED, WIND HEIGHTS 1 FT. MAXIMUM.

FLOATATION (ENCLOSED DOCKS): 50 PSF PLUS DOCK SYSTEM DEAD LOAD. CONFORMANCE TO SPECIFIED SEA SNO LOADS OR LOCAL ORDINANCES ARE NEITHER EXPRESSED OR IMPLIED BY THESE SPECIFICATIONS. DESIGN IS IN CONFORMANCE WITH PORTIONS OF THE AISC MANUAL OF STEEL CONSTRUCTION, AND / OR THE INTERNATIONAL BUILDING CODE, LATEST EDITION, AS DEEMED APPLICABLE BY GALVA-FOAM TO FLOATATION STRUCTURES.

FLOATATION - ACCOMMODATES ROOF RAIN LOAD, STRUCTURE AND OWNER SUPPLIED DEAD LOAD. FLOATATION DISTRIBUTED TO PROVIDE A UNIFORM FREEBOARD UNDER DEAD LOAD KNOWN AT TIME OF CONTRACT ONLY. SOME SNOW OR LIVE LOADS MAY CAUSE UNFORESEEN REDUCTION OF FREEBOARD. IT IS THE SOLE RESPONSIBILITY OF THE OWNER/OPERATOR TO REDUCE THESE OR ANY LOADS PRIOR TO ANY FLOATATION UNIT BECOMING COMPLETELY SUBMERGED.

THE CONTRACT PROVIDED IS BASED UPON PLANS TRANSMITTED BY BUYER OR UPON PLANS CREATED ACCORDING TO SPECIFICATIONS FURNISHED BY OR INDEPENDENTLY VERIFIED AS ACCEPTABLE BY BUYER. IF ANY GOVERNMENTAL AUTHORITY REQUIRES ANY CHANGES IN THE PLANS, SPECIFICATIONS, OR CONSTRUCTION OF THE PROJECT, OR IF ANY CHANGES ARE MADE IN THE PLANS AND SPECIFICATIONS AFTER THE CONTRACT PRICE WILL BE ADJUSTED IN THE AMOUNT THEREOF. TO SEE COST OF THE REQUIRED CHANGES, REFER TO WRITTEN CONTRACT / PROPOSAL TERMS.

UNLESS SPECIFICALLY DIRECTED OTHERWISE BY PROJECT SPECIFICATIONS, GALVA FOAM RESERVES THE RIGHT TO MAKE MINOR CHANGES TO ITEMS SHOWN ON THE DRAWING TO IMPROVE QUALITY, STRUCTURAL INTEGRITY AND / OR APPEARANCE.

REV.	DESCRIPTION	DRWN.	DATE	CKD.
0	ISSUED FOR FABRICATION	TB	11/30/05	

THIS DRAWING CONTAINS PROPRIETARY INFORMATION WHICH IS THE PROPERTY OF GALVA-FOAM MARINE INDUSTRIES, INC. AND SHALL NOT BE COPIED, REPRODUCED OR MADE AVAILABLE TO ANY PERSONS WITHOUT PRIOR WRITTEN CONSENT OF GALVA-FOAM MARINE INDUSTRIES, INC.

SHOREMASTER
MARINE GALVA-FOAM INDUSTRIES
WE COVER THE WATER FRONT

GALVA-FOAM MARINE INDUSTRIES, INC.
436 SOUTH STATE HIGHWAY 7
CAMDENTON, MO. 65020
(573-346-3323)

GRAFTON HARBOR MARINA (PLATFORM)

DRWG NO. 5615xE | DATE XX/XX/XX
SCALE: 1"=5' | DRAWN: TB | FM-04-02