ROUTE NO.	SECTION	COUNTY	TOTAL SHEETS	SHEET NO.
F.A.U. 6385	00-00182 -01-BR	McLEAN	33	26
FED. ROAD DIST. NO.		ILLINOIS	FED. AID PROJECT- BRM-9227(43)	

CONTRACT NO. 87269

The Illinois Coil-Lock Anchor Bolt is a proprietary item which is the property of the Illinois Department of Transportation. Use, reproduction or disclosure without express written permission is prohibited and protected under Federal copyright laws. The production and the fabrication of this bolt for use on highway projects in the State of Illinois shall be permitted and there shall be no incurred charges or fees to the manufacturer or the fabricator for producing or fabricating this bolt.

D	E	H	K	"d"
1"	1 1/8"	13/16"	1 3/4"	1/4"
1 1/4"	1 3/8"	1 1/16"	2"	3/8"
1 1/2"	1 5/8"	1 5/16"	2 1/8"	1/2"
2"	2 1/8"	1 13/16"	2 7/8"	1/2"
2 1/2"	2 5/8"	2 5/16"	3 3/8"	1"

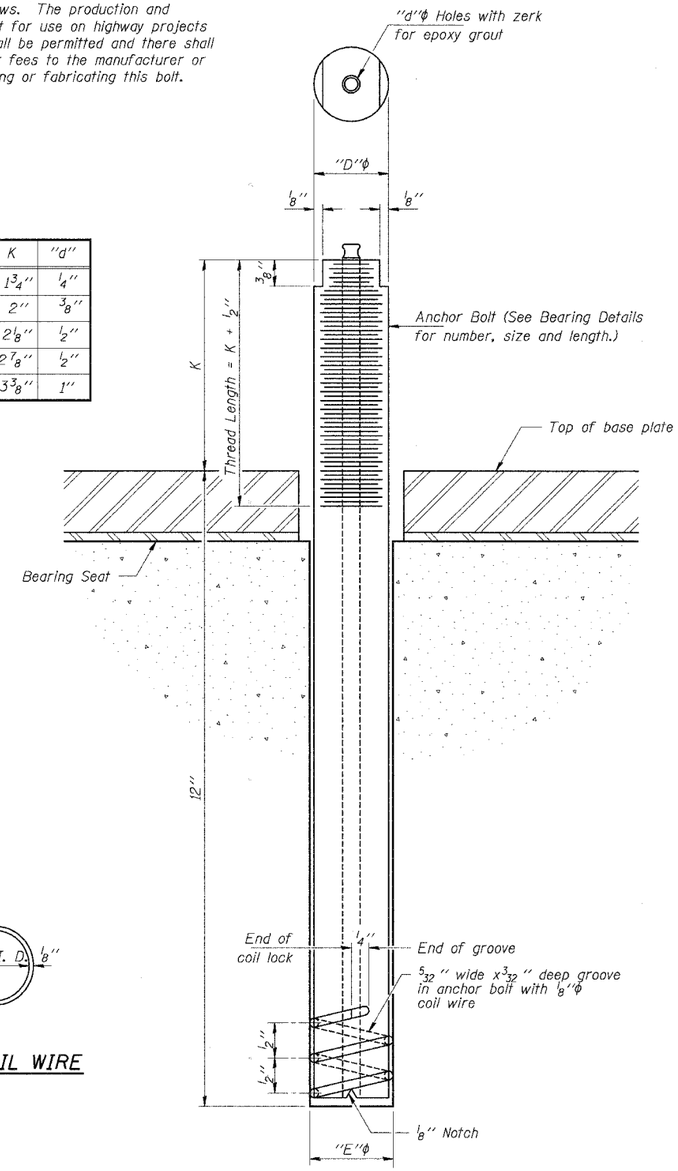

ILLINOIS COIL-LOCK ANCHOR BOLT

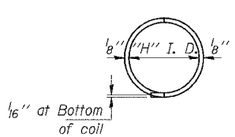

PLAN-COIL WIRE

MATERIALS FOR ILLINOIS COIL-LOCK ANCHOR BOLT

The anchor bolt shall be fabricated from cold drawn or hot finished seamless carbon steel mechanical tubing conforming to ASTM A 519, Grade 1026, CW and supplied with hexagonal nuts and cut washers.

The coil wire shall be made of any suitable soft steel wire.

The finished anchor bolt shall be cleaned of rust and other foreign materials and wrapped or packaged to prevent contamination until they are installed.

The epoxy grout shall be a two-component, epoxy resin bonding system conforming to ASTM C 881, Type I, Grade 1 and of a Class suitable for the temperature at installation.

INSTALLATION PROCEDURE for the ILLINOIS COIL-LOCK ANCHOR BOLT

1. With the coil wire in place, the bolt shall be inserted into the hole and turned clockwise to a snug fit in the hole. Nut and washer shall be placed on the bolt. The nut shall be tensioned until the steel base plates are held securely to the concrete bearing seat.
2. Epoxy grout shall be pumped through the zerk fitting with a pressure gun. Pumping shall continue until the epoxy overflows the hole around the bolt shank. After pumping is discontinued, excess epoxy shall be immediately wiped off.

ALTERNATE ANCHOR BOLTS

The Contractor may use, at his option, the capsule or the adhesive cartridge type anchor rods that have been previously tested and given a prior approval by the Department. The Contractor shall install these anchor rods in pre-drilled holes according to the manufacturer's recommendations and procedures.

The capsule or the adhesive cartridge type anchor rods shall be a two part system composed of:

1. A threaded rod stud with nut and washer of the type specified.
2. A sealed glass capsule or a sealed glass adhesive cartridge containing premeasured amounts of the adhesive chemical.

Location	Type
Abutments	A325
Piers	A325

ASTM F 1554 Grade 105, ASTM A 449 and AASHTO M 314 Grade 105 anchor bolts may be substituted for the anchor bolts shown above.

GENERAL NOTES

Holes in the masonry for anchor bolts shall be drilled through the base plates to the diameter and depth shown or according to the manufacturer's recommendation after beams or girders have been erected and adjusted.

Prior to setting the bolts, the holes shall be dry and all dust and loose particles shall be removed by the use of compressed air or vacuuming.

The anchor bolts, furnished and installed and including the epoxy grout or capsules shall not be paid for separately but shall be included in the unit bid price for "Furnishing and Erecting Structural Steel".

RLR
Rice, Berry and Associates
A Division of Hampton, Lenzini and Renwick, Inc.
Civil & Structural Engineers
3085 Stevenson Drive
Suite 201
Springfield, Illinois 62703
217-546-3400
P.O. Box 1036
DuQuoin, Illinois 62832
618-790-4637

Account Number 12-59-0033-I
Date: 11/15/05

DESIGNED: P.S.L. | CHECKED: S.W.M. | DRAWN: D.B.

ANCHOR BOLT DETAILS

F.A.U. 6385 / C.H. 70 OVER SUGAR CREEK

SECTION 00-00182-01-BR

McLEAN COUNTY

STRUCTURE 057-5306 / STATION 820+21

..\P\12590033\Plans\0033apr.dgn 11/15/2005 01:56:22 PM