ROUTE NO.	SECTION	COUNTY	TOTAL SHEETS	SHEET NO.
836	118BR	CHAMPAIGN	29	14
FED. ROAD DIST. NO.		ILLINOIS	FED. AID PROJECT-	

SHEET NO. 7
9 SHEETS

Contract #70390

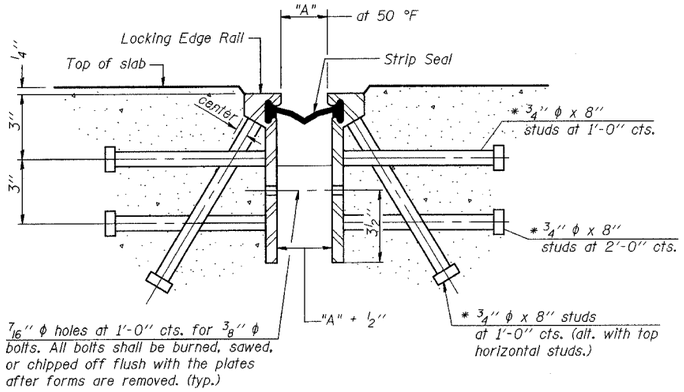

Required Strip Seal rated movement	"A"
1"	1 1/8"
2"	1 3/4"

SECTION THRU ROLLED RAIL EXP. JOINT

(392 Studs Required)

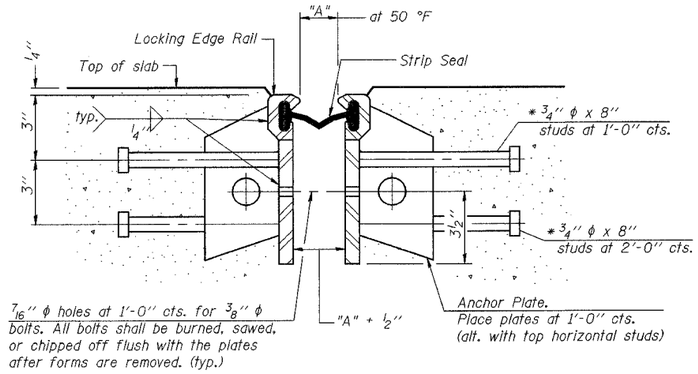

SECTION THRU WELDED RAIL EXP. JOINT

(236 Studs Required)
(156 Anchor Plates Required)

* Granular or solid flux filled headed studs conforming to Article 1006.32 of the Std. Specs., automatically end welded.

GENERAL NOTES

The strip seal shall be made continuous and shall have a minimum thickness of 1/4". The configuration of the strip seal shall match the configuration of the Locking Edge Rails.

The height and thickness of the Locking Edge Rails shown are minimum dimensions. The actual configuration of the Locking Edge Rails and matching strip seal may vary from manufacturer to manufacturer. Flanged edge rails will not be allowed.

Locking Edge Rails may be spliced at slope discontinuities and stage construction joints.

The manufacturer's recommended installation methods shall be followed.

The joint opening and deck dimensions detailed on the superstructure are based on a preformed joint seal. If the contractor elects to use the alternate strip seal joint, the opening and deck dimensions shall be modified according to the dimensions detailed on this sheet. Required modifications shall be made at no additional cost to the State.

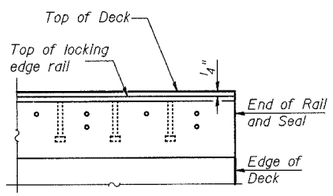

END TREATMENT ELEVATION

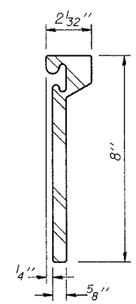

ROLLED (EXTRUDED) RAIL

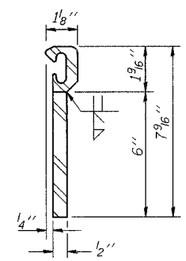

WELDED RAIL

LOCKING EDGE RAILS

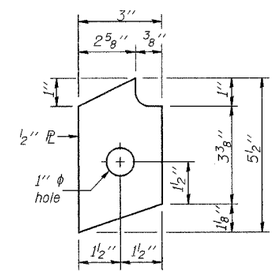

ANCHOR PL

(for welded rail)

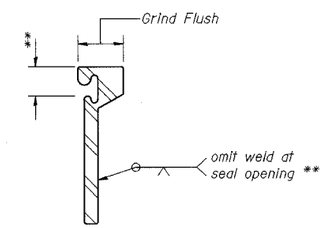

LOCKING EDGE RAIL SPLICE

The inside of the locking edge rail groove shall be free of weld residue.

(Sheet 2 of 2)

ILLINOIS DEPARTMENT OF TRANSPORTATION

BRIDGE JOINT SYSTEM - EXPANSION
(ALTERNATE - STRIP SEAL)
IL ROUTE 49 OVER A TRIBUTARY OF
THE LITTLE VERMILION RIVER
F.A.P. ROUTE 836 SECTION 118BR
CHAMPAIGN COUNTY
STATION 664+76.09
STRUCTURE NO. 010-0236

DATE: JUNE 2005

DRAWN BY: NJV/MLO
CHECKED BY: SJK