CONTRACT NO. 64640

F.A.P. RTE.	SECTION	COUNTY	TOTAL SHEETS	SHEET NO.
22	6M & TS	HENRY	257	134
STA.		TO STA.		
FED. ROAD DIST. NO.	ILLINOIS	FED. AID PROJECT		

DISABLED RAMP DETAIL

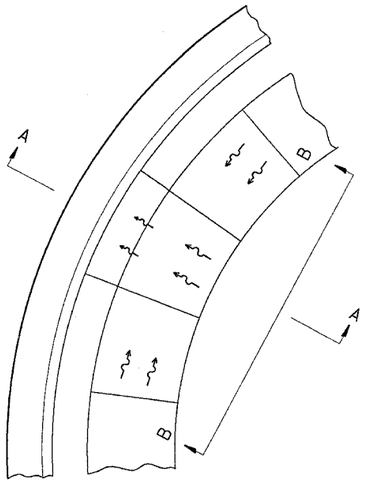

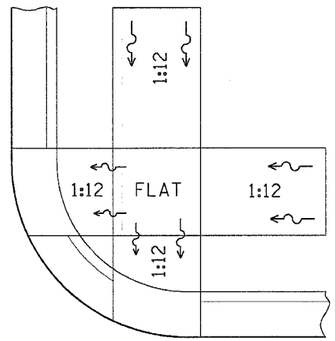

SEE STANDARD 424001
FOR SIDE FLARE DETAIL
& SEE PLANS FOR RAMP TYPE.

ALL DIMENSIONS ARE IN MILLIMETERS (INCHES)
UNLESS OTHERWISE NOTED.

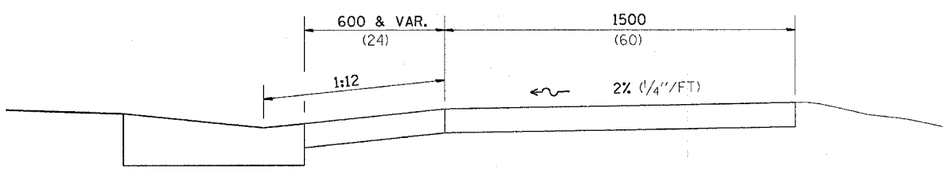

SECTION A-A

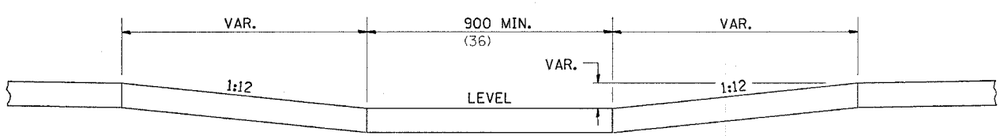

SECTION B-B

NOTES : THIS DETAIL TO BE USED IN CONJUNCTION WITH STATE STANDARD 424001.
THE MAXIMUM ALLOWABLE CROSS SLOPE FOR SIDEWALK IS 2% (1/4"/FT).
THE MAXIMUM ALLOWABLE SIDEWALK GRADE IS 8% (1/12"/FT). IF SPACE LIMITATIONS PROHIBIT THE USE OF THE 1:12 SLOPE, THEN SLOPES BETWEEN 1:10 ARE 1:12 ARE PERMITTED FOR A MAXIMUM RISE OF 150 (6). SLOPES 1:8 AND 1:10 ARE ALLOWED FOR A MAXIMUM RISE OF 75 (3). SLOPES STEEPER THAN 1:8 ARE NOT PERMITTED.
THE DEPRESSED CURB IS NOT STANDARD. THE RISE IS 13 (1/2) INSTEAD OF 40 (1 1/2).

REVISED 12/08/92

PIPE HANDRAILS FOR STEPS

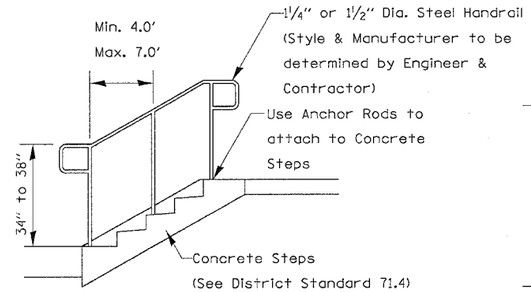

HANDRAIL FOR CONCRETE STEPS

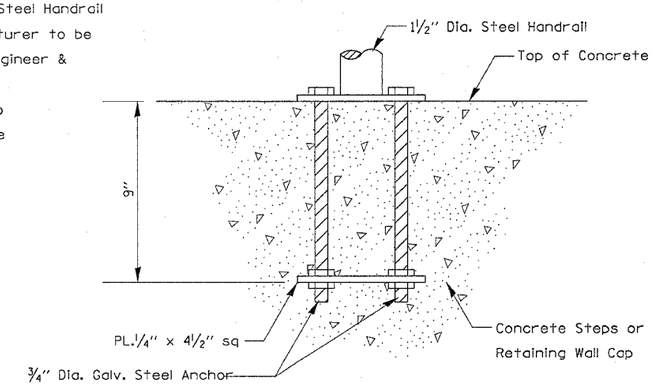

ANCHOR ROD DETAIL

(Included in the cost of Hand or Safety Rail)

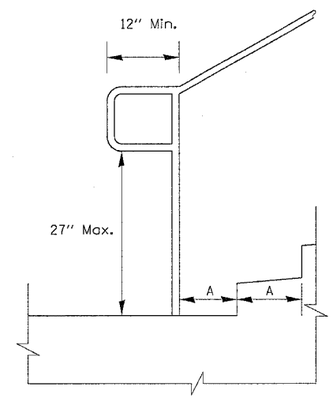

Extension at Bottom of Run Detail

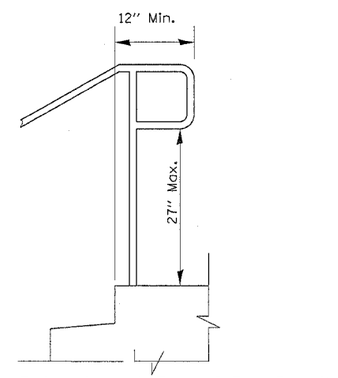

Extension at Top of Run Detail

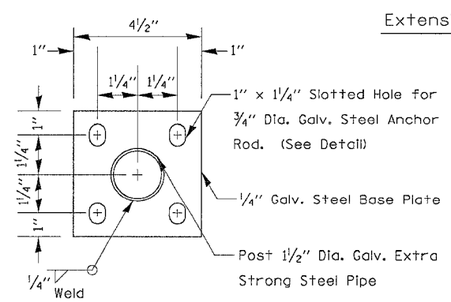

POST BASE PLATE DETAIL

(Included in the cost of Hand or Safety Rail)

Notes:

Stairways shall have continuous handrails both sides of all stairs.

The inside handrail on switchback or dogleg stairs shall always be continuous.

Gripping surfaces shall be uninterrupted by newel posts, other construction elements, or obstructions.

Ends of handrail shall be either rounded or returned smoothly to floor, wall, or post.

Hand & safety rails shall not rotate within their fittings.

The clear space between hanrails and any wall shall be 11/2"

Handrail shall conform to Section 510 with the exception that all pipe and connections shall be welded galvanized or aluminum according to Article 1006.27, 1006.30, or 1006.34.

The diameter of the gripping surface of the handrail shall be 1-1/4" to 1-1/2"

This work shall be paid for at the contract unit price per meter (foot) for PIPE HANDRAIL.

PLOT DATE = Thu Oct 27 08:42:54 2005
FILE NAME = c:\projects\p216980\p16980sp1.dgn
PLOT SCALE = 50.000 ' / IN.
REFERENCE = REF