CONTRACT NO. 64640

F.A.P RTE.	SECTION	COUNTY	TOTAL SHEETS	SHEET NO.
22	6M & TS	HENRY	257	125
STA.		TO STA.		
FED. ROAD DIST. NO.	ILLINOIS	FED. AID PROJECT		

INLET SPECIAL, NO. 1
STA. 369 + 60.10 RT & 370 + 45.70 RT

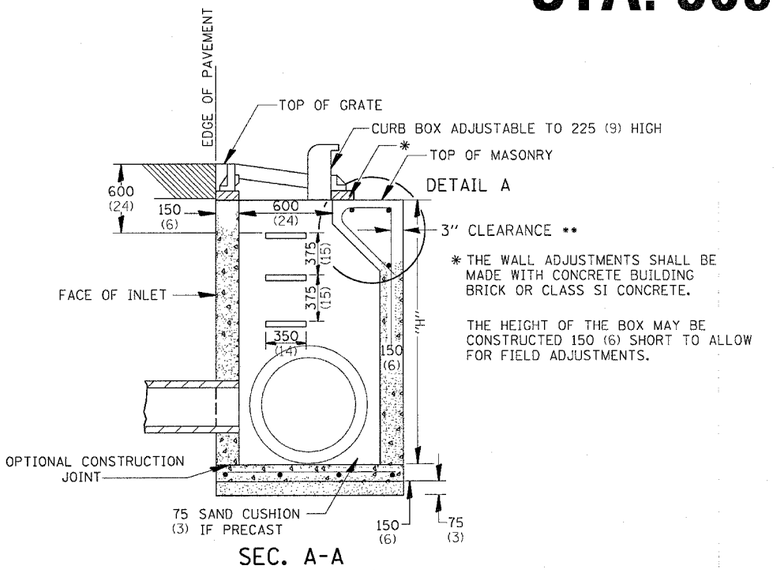

SEC. A-A

* THE WALL ADJUSTMENTS SHALL BE MADE WITH CONCRETE BUILDING BRICK OR CLASS SI CONCRETE.

THE HEIGHT OF THE BOX MAY BE CONSTRUCTED 150 (6) SHORT TO ALLOW FOR FIELD ADJUSTMENTS.

** NOTE: ALL CLEARANCES 2" UNLESS OTHERWISE NOTED

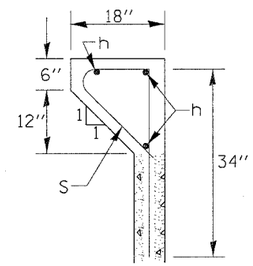

DETAIL A

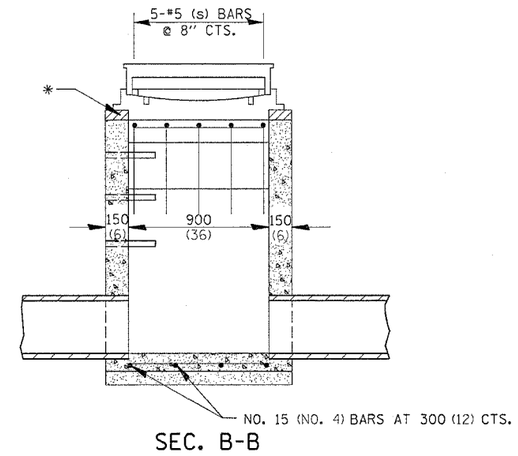

SEC. B-B

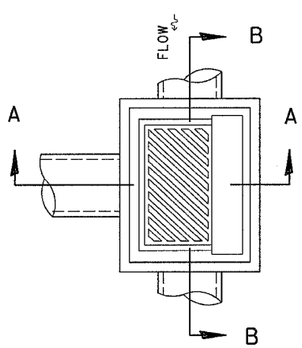

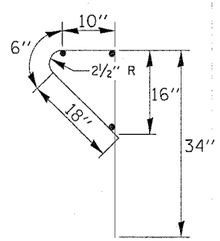

BAR s

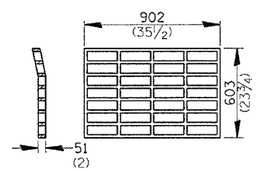

PLAN OF GRATE *

* THIS GRATE TO BE USED WITHOUT CURB BOX WHEN INLET IS IN DRIVEWAY.

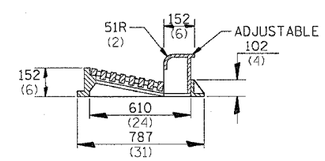

SECTION A-A

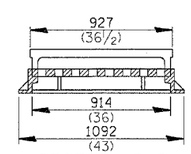

SECTION B-B

BILL OF MATERIALS

BAR	NO.	SIZE	LENGTH	SHAPE
s	5	#5	5'-8"	
h	3	#5	2'-10"	

NOTES

SEE STANDARD 602701 FOR DETAILS OF STEPS.

EXCEPT AS NOTED HEREON INLET SPECIAL SHALL BE CONSTRUCTED IN ACCORDANCE WITH SECTION 602 OF THE STANDARD SPECIFICATIONS.

THE SIDE WALLS MAY BE BUILT AS PRECAST SEGMENTED SECTIONS.

ALL VOIDS AROUND PIPE ENTRANCE, BOTH INSIDE AND OUTSIDE, SHALL BE SEALED WITH MORTAR.

WEIGHT OF CAST IRON FRAME & GRATE = 240 kg (530 lbs.) ± .
STEPS SHALL BE OMITTED WHEN DEPTH OF "H" IS LESS THAN 1.5 m (5 ft) .

DETAIL OF FRAME & GRATE

NOTES

CLASS SI CONCRETE OR PRECAST CONCRETE SHALL BE USED THROUGHOUT. PRECAST CONCRETE SHALL BE IN ACCORDANCE WITH SECTION 504.01 THRU 504.05 OF THE STANDARD SPECIFICATIONS EXCEPT THAT CONCRETE STRENGTH SHALL BE 27.5 MPa (4,000 psi) AFTER 28 DAYS.

THE CONTRACT UNIT PRICE EACH FOR INLET SPECIAL SHALL INCLUDE THE COST OF CONSTRUCTING THE INLET BOX, FURNISHING AND INSTALLING THE FRAME AND GRATE, THE CAST IRON STEPS (IF USED), THE PRECAST FLOOR SLABS, SAND CUSHION (WHEN USED) AND REINFORCEMENT BARS.

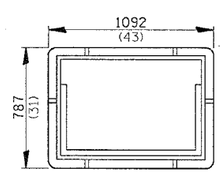

PLAN OF FRAME

35 (1⅜) DIAGONAL BARS WITH 32 (1¼) OPENINGS.

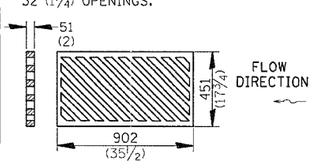

PLAN OF GRATE

ALL DIMENSIONS ARE IN MILLIMETERS (INCHES) UNLESS OTHERWISE NOTED.

REVISIONS	
NAME	DATE

ILLINOIS DEPARTMENT OF TRANSPORTATION

SCALE: VERT. HORIZ.

DATE

DRAWN BY

CHECKED BY

PLOT DATE = Thu Oct 27 08:42:59 2005
FILE NAME = c:\projects\k216980\k16980spl.dgn
PLOT SCALE = 50.0000 ' / IN.
REFERENCE = $$REF$$