01-19-2024 LETTING ITEM 164

F.A.* RTE.	SECTION	COUNTY	TOTAL SHEETS	SHEET NO.
*	(5)RS & (5&5HB)RC	WINNEBAGO	1279	1
	ILLINOIS	CONTRACT NO. 64R71		

* FAI ROUTE 39 (I-39) & FAP ROUTE 525 (US 20)

D-92-028-22

FOR INDEX OF SHEETS, SEE SHEET NO. 2

DESIGN DESIGNATION

HARRISON AVE: 3,395 (40) OTHER PRINCIPAL ARTERIAL 12 (JPC–20)
DESIGN SPEED: 45MPH* POSTED SPEED: 45MPH
PV: 90% MU: 5% SU: 5%

US 20: 4,345 (40) OTHER PRINCIPAL ARTERIAL 12 (JPC–20)
DESIGN SPEED: 45MPH* POSTED SPEED: 45MPH
PV: 90% MU: 5% SU: 5%

I–39: 9,595 (40) INTERSTATE 101 (CRPC–20)
DESIGN SPEED: 70MPH POSTED SPEED: 65MPH
PV: 20% MU: 40% SU: 40%

RAMPS: 7,050 (40) INTERSTATE 19 (JPC–20)
DESIGN SPEED: 50MPH POSTED SPEED: 50MPH
PV: 20% MU: 40% SU: 40%

***DDI CROSSOVER:**
DESIGN SPEED: 35MPH POSTED SPEED: 35MPH

TOWNSHIPS: ROCKFORD & CHERRY VALLEY

SECTIONS: 16, 9, 10, 11, 3, 2, 35 AND 36

100′ 200′ 300′ — 1″ = 100′
0 10′ 20′ 30′ — 1″ = 10′
0 50′ 100′ — 1″ = 50′
0 50′ 100′ — 1″ = 40′
0 50′ 100′ — 1″ = 30′
0 50′ 100′ — 1″ = 20′

FULL SIZE PLANS HAVE BEEN PREPARED USING STANDARD ENGINEERING SCALES. REDUCED SIZED PLANS WILL NOT CONFORM TO STANDARD SCALES. IN MAKING MEASUREMENTS ON REDUCED PLANS, THE ABOVE SCALES MAY BE USED.

J.U.L.I.E.
JOINT UTILITY LOCATION INFORMATION FOR EXCAVATION
1-800-892-0123
OR 811

PROJECT MANAGER: ROBERT BARTON
Robert.Barton@Illinois.gov
(815) 284-5958

SECTION ENGINEER: ANDREW LEE

CONTRACT NO. 64R71

STATE OF ILLINOIS
DEPARTMENT OF TRANSPORTATION
PROPOSED
HIGHWAY PLANS

FAI ROUTE 39 (I–39) AND FAP ROUTE 525 (US 20)
SECTION (5)RS & (5&5HB)RC
PROJECT NHPP–6QNF(571)
RECONSTRUCTION OF I–39: HARRISON AVE TO 0.4 MI N (INCLUDING INTERCHANGE RAMPS) & US 20: I–39 TO MILL RD & HARRISON AVE: MALL DRIVE TO I–39
WINNEBAGO COUNTY

C–92–092–22

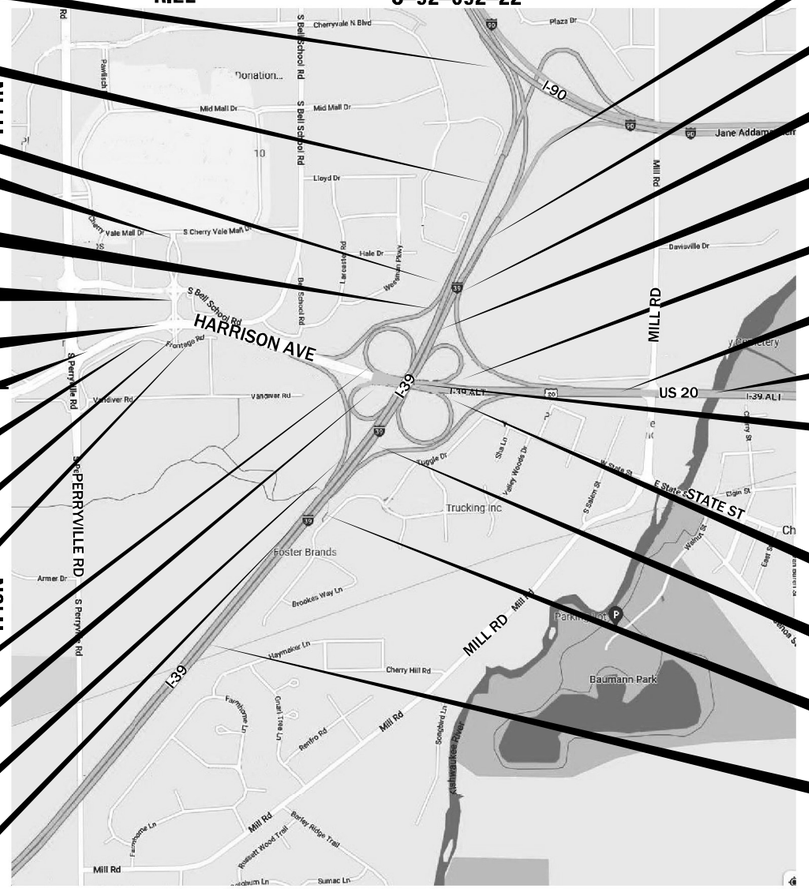

SB I-39 IMPROVEMENT ENDS STA 2761+82.00
SB I-39 PROJECT ENDS STA 1319+95.00
RAMP C PROJECT BEGINS STA 304+04.08
MALL DR IMPROVEMENT ENDS STA 309+46.68
SB I-39 PROJECT BEGINS STA 1306+33.75
MALL DR PROJECT ENDS STA 303+37.00
HARRISON AVE PROJECT BEGINS STA 123+50.00
HARRISON AVE IMPROVEMENT BEGINS STA 113+83.23
FRONTAGE RD PROJECT BEGINS STA 500+00.00
MALL DR PROJECT BEGINS STA 297+68.70
FRONTAGE RD PROGECT ENDS STA 502+91.05
RAMP C PROJECT ENDS STA 317+29.54
RAMP D PROJECT BEGINS STA 402+19.35
RAMP D PROJECT ENDS STA 412+00.00
RAMP D IMPROVEMENT ENDS STA 416+33.27

NB I-39 IMPROVEMENT ENDS STA 2752+50.31
NB I-39 PROJECT ENDS STA 22+00.00
RAMP A PROJECT ENDS STA 110+77.40
NB I-39 PROJECT BEGINS STA 12+36.86
RAMP A PROJECT BEGINS STA 102+71.21
US 20 PROJECT ENDS STA 1337+00.00
US 20 IMPROVEMENT ENDS STA 1344+84.99
PR ℄ US 20/HARRISON AVE STA 153+08.66 = PR ℄ US 20/HARRISON AVE STA 1311+13.21
RAMP B PROJECT ENDS STA 225+76.13
RAMP B PROJECT BEGINS STA 217+13.88
RAMP B IMPROVEMENT BEGINS STA 209+60.23
I-39 IMPROVEMENT BEGINS STA 2631+79.00

N.T.S.

GROSS LENGTH = 13,220.34 FT. = 2.504 MILE
NET LENGTH = 13,220.34 FT. = 2.504 MILE

LOCATION OF SECTION INDICATED THUS: –

STATE OF ILLINOIS
DEPARTMENT OF TRANSPORTATION

SUBMITTED October 16, 20 23
REGIONAL ENGINEER

December 8, 2023
ENGINEER OF DESIGN AND ENVIRONMENT

December 8, 2023
DIRECTOR OF HIGHWAYS PROJECT IMPLEMENTATION

benesch
Alfred Benesch & Company
35 West Wacker Drive, Suite 3300
Chicago, Illinois 60601
312-565-0450

PRINTED BY THE AUTHORITY OF THE STATE OF ILLINOIS

BENESCH
JEFFREY J TARDY
062-060042

DATE: 10-13-2023

JEFFREY J. TARDY
062-060042
REGISTERED
PROFESSIONAL
ENGINEER
OF
ILLINOIS

SHEETS: 1-36, 49-96, 192-242, 247-325, 236-380, 469-472, 473, 729, 730-755, 756-1279

EXPIRATION DATE: 11-30-2023

BENESCH
AIMEE L GIBSON
062-066832

DATE: 10-13-2023

AIMEE L. GIBSON
062-066832
REGISTERED
PROFESSIONAL
ENGINEER
OF
ILLINOIS

SHEETS: 37-39, 41-47, 97-116, 118-130, 132-163, 167-189

EXPIRATION DATE: 11-30-2023

KASKASKIA
ROBERT J BOHNAK
062-057928

DATE: 10-13-2023

ROBERT J. BOHNAK
062-057928
REGISTERED
PROFESSIONAL
ENGINEER
OF
ILLINOIS

SHEETS: 565-575

EXPIRATION DATE: 11-30-2023

BENESCH
GEOFFREY H. THIESSE
062-060445

DATE: 10-13-2023

GEOFFREY H. THIESSE
062-060445
REGISTERED
PROFESSIONAL
ENGINEER
OF
ILLINOIS

SHEETS: 576-633, 650, 651, 655-728

EXPIRATION DATE: 11-30-2023

BENESCH
CATHERINE A RUTKOWSKI
062-072964

DATE: 10-13-2023

CATHERINE A. RUTKOWSKI
062-072964
REGISTERED
PROFESSIONAL
ENGINEER
OF
ILLINOIS

SHEETS: 381-464, 465-468

EXPIRATION DATE: 11-30-2023

KASKASKIA
ERIC J LINDEMANN
062-051170

DATE: 10-13-2023

ERIC LINDEMANN
062-051170
REGISTERED
PROFESSIONAL
ENGINEER
OF
ILLINOIS

SHEETS: 634-649, 652-654

EXPIRATION DATE: 11-30-2023

QUIGG ENGINEERING
FRANCIS B NELSON III
062-059187

DATE: 10-13-2023

FRANCIS B. NELSON, III
062-059187
REGISTERED
PROFESSIONAL
ENGINEER
OF
ILLINOIS

SHEETS: 474-488, 491-530

EXPIRATION DATE: 11-30-2023

QUIGG ENGINEERING
KEITH W BENTING
081-004777

DATE: 10-13-2023

KEITH W. BENTING
082-004777
LICENSED
STRUCTURAL
ENGINEER
STATE OF ILLINOIS

SHEETS: 531-564

EXPIRATION DATE: 11-30-2024

WILLETT HOFMANN
GEOFFREY F SMITH
062-049202

DATE: 10-13-2023

GEOFFREY F. SMITH
062-049202
REGISTERED
PROFESSIONAL
ENGINEER
OF
ILLINOIS

SHEETS: 40, 48, 117, 131, 164-166, 190-191, 243-246, 489-490

EXPIRATION DATE: 11-30-2023

INDEX OF SHEETS

1	COVER SHEET
2	SIGNATURE/SEAL SHEET
3	INDEX OF SHEETS
4	LIST OF HIGHWAY STANDARDS
5	GENERAL NOTES
6	HMA TABLE
7-35	SUMMARY OF QUANTITIES
36-40	EXISTING TYPICAL SECTIONS
41-48	PROPOSED TYPICAL SECTIONS
49-96	SCHEDULE OF QUANTITIES
97-117	ALIGNMENT TIES AND BENCHMARKS
118	REMOVAL KEY PLAN
119-120	REMOVAL PLANS - HARRISON AVE
121	REMOVAL PLANS - HARRISON AVE / US20
122-123	REMOVAL PLANS - US20 / HARRISON AVE
124	REMOVAL PLANS - RAMP AD AND RAMP CA
125	REMOVAL PLANS - RAMP AD AND RAMP CB
126	REMOVAL PLANS - RAMP CA AND RAMP BD
127	REMOVAL PLANS - RAMP AC AND RAMP DB
128	REMOVAL PLANS - RAMP DA AND BC
129-130	REMOVAL PLANS - I-39
131	REMOVAL PLANS - SOUTH MALL DR
132	ROADWAY KEY PLAN
133-134	ROADWAY PLANS - HARRISON AVE
135	ROADWAY PLAN - HARRISON AVE / US20
136-137	ROADWAY PLAN - US20 / HARRISON AVE
138-139	ROADWAY PROFILE - HARRISON AVE
140	ROADWAY PROFILE - HARRISON AVE / US20
141-142	ROADWAY PROFILE - US20 / HARRISON AVE
143-144	ROADWAY PROFILE - EB DDI
145-146	ROADWAY PROFILE - WB DDI
147	ROADWAY PLAN - RAMP A
148	ROADWAY PROFILE - RAMP A
149	ROADWAY PLAN - RAMP B
150	ROADWAY PROFILE - RAMP B
151-152	ROADWAY PLAN - RAMP C
153-154	ROADWAY PROFILE - RAMP C
155	ROADWAY PLAN - RAMP D
156	ROADWAY PROFILE - RAMP D
157-158	ROADWAY PLAN - I-39
159	ROADWAY PROFILE - I-39 NB EOP
160	ROADWAY PROFILE - I-39 SB EOP
161-163	ROADWAY PROFILE - SHARED USE PATH (SUP)
164-165	ROADWAY PLANS - SOUTH MALL DR
166	ROADWAY PROFILE - SOUTH MALL DR
167	ROADWAY DETAILS - AGGREGATE SUBGRADE IMPROVEMENT
168-174	ROADWAY DETAILS - SUPERELEVATION DETAILS
175-177	ROADWAY DETAILS - ADA RAMPS
178	ROADWAY DETAILS - SHARED USE PATH INTERSECTION
179	ROADWAY DETAILS - GORE DETAILS
180-184	ROADWAY DETAILS - JOINTING PLANS
185-187	ROADWAY DETAILS - GEOMETRIC LAYOUT
188-189	ROADWAY DETAILS
190-191	ROADWAY DETAILS - INTERSECTION DETAILS SOUTH MALL DR
192-194	STAGING PLAN - EMERGENCY DETOUR SIGNING
195	STAGING PLAN - KEY PLAN
196	STAGING PLAN - GENERAL NOTES
197-198	STAGING PLAN - STAGING NOTES
199	TEMPORARY PAVEMENT DETAIL
200-215	MAINTENANCE OF TRAFFIC - TYPICAL SECTIONS
216-231	MAINTENANCE OF TRAFFIC - PRE-STAGE
232-242	MAINTENANCE OF TRAFFIC - STAGE 1
243-246	MAINTENANCE OF TRAFFIC - STAGE 1A
247-253	MAINTENANCE OF TRAFFIC - STAGE 1B
254-261	MAINTENANCE OF TRAFFIC - STAGE 2
262-263	MAINTENANCE OF TRAFFIC - STAGE 2A
264-273	MAINTENANCE OF TRAFFIC - STAGE 2B
274-276	MAINTENANCE OF TRAFFIC - STAGE 2B-2
277-282	MAINTENANCE OF TRAFFIC - WINTER
283-296	MAINTENANCE OF TRAFFIC - STAGE 3
297	MAINTENANCE OF TRAFFIC - STAGE 3-2
298-300	MAINTENANCE OF TRAFFIC - STAGE 3B
301-313	MAINTENANCE OF TRAFFIC - STAGE 4
314-321	MAINTENANCE OF TRAFFIC - STAGE 4B
322-325	MAINTENANCE OF TRAFFIC - DETAILS
326	EROSION CONTROL - KEY PLAN
327-380	EROSION CONTROL AND SEDIMENT CONTROL PLANS
381	DRAINAGE REMOVAL AND UTILITIES - KEY PLAN
382-391	DRAINAGE REMOVAL AND UTILITIES
392-396	DRAINAGE REMOVAL SCHEDULES
397-426	DRAINAGE SCHEDULES
427	DRAINAGE PLAN AND PROFILE - KEY PLAN
428-429	DRAINAGE PLAN - HARRISON AVE
430	DRAINAGE PLAN - HARRISON AVE / US20
431-432	DRAINAGE PLAN - US 20
433	DRAINAGE PLAN - RAMP A
434	DRAINAGE PLAN - RAMP B
435-436	DRAINAGE PLAN - RAMP C
437	DRAINAGE PLAN - RAMP D
438-439	DRAINAGE PROFILE - HARRISON AVE
440	DRAINAGE PROFILE - HARRISON AVE / US20
441-442	DRAINAGE PROFILE - US20
443	DRAINAGE PROFILE - RAMP A
444	DRAINAGE PROFILE - RAMP B
445-446	DRAINAGE PROFILE - RAMP C
447	DRAINAGE PROFILE - RAMP D
448-449	DRAINAGE PROFILE - HARRISON AVE
450	DRAINAGE PROFILE - HARRISON AVE / US20
451-452	DRAINAGE PROFILE - US20
453-462	CULVERT SECTION - DRAINAGE CULVERT CROSS SECTION
463-464	DRAINAGE DETAILS
465-468	GRADING PLAN
469-472	PLAT OF HIGHWAYS
473	PAVEMENT MARKING - KEY PLAN
474-490	PAVEMENT MARKING AND SIGNING
491-496	PAVEMENT MARKING AND SIGNING - SIGNING REMOVAL
497-515	PROPOSED SIGNING
516-521	PAVEMENT MARKING AND SIGNING - ELEVATION VIEWS
522-530	PAVEMENT MARKING AND SIGNING - SIGN PANEL DETAILS
531-532	SIGNING DETAILS
533-564	OVERHEAD SIGN STRUCTURES
565	LANDSCAPING - KEY PLAN
566-575	LANDSCAPING PLANS
576-654	TRAFFIC SIGNAL PLANS
655	LIGHTING PLAN - GENERAL NOTES AND LEGEND
656	LIGHTING PLAN - KEY PLAN
657-692	EXISTING LIGHTING REMOVAL AND TEMPORARY LIGHTING PLAN
693-696	LIGHTING PLAN - HARRISON AVE
697	LIGHTING PLAN - RAMP A
698	LIGHTING PLAN - RAMP B
699	LIGHTING PLAN - RAMP C
700	LIGHTING PLAN - RAMP D
701-703	LIGHTING PLAN - I-39
704-705	LIGHTING PLAN - SCHEMATICS
706	LIGHTING PLAN - LUMINAIRE PERFORMANCE TABLE
707	LIGHTING PLAN - I-90 GENERAL NOTES AND LEGEND
708	LIGHTING PLAN - I-90 LIGHTING REMOVAL
709	LIGHTING PLAN - I-90 PROPOSED LIGHTING
710	LIGHTING PLAN - I-90 WIRING AND PANEL SCHEDULE
711-717	LIGHTING PLAN - I-90 TOLLWAY DETAILS
718-728	FIBER OPTIC PLAN
729	FRSA STANDARD DETAIL SHEET
730	CATCH BASIN OR INLETS TO BE ADJUSTED OR RECONSTRUCTED (DIST STD 17.4) RIPRAP AT END SECTIONS (DIST STD 19.4) HOT-MIX ASPHALT SHOULDER (DIST STD 22.4) SIDEWALK AND DRIVEWAY PAVEMENT PAY AREAS (DIST STD 35.4)
731	DELINEATOR AND POST ORIENTATION (DIST STD 37.4) TYPICAL BENCHING ON EXISTING EMBANKMENT (DIST STD 50.4) TYPICAL CONSTRUCTION OF EMBANKMENTS WITH GRANULAR MATERIAL (DIST STD 51.4) LAND SECTIONS & REFERENCE MARKERS (DIST STD 63.4)
732	INLETS, SPECIAL (DIST STD 10.2) DOUBLE INLET, SPECIAL (DIST STD 12.2)
733	UNDERDRAIN FOR ACROSS ROAD (AR) CULVERTS (DIST STD 37.2)
734	PERMANENT SURVEY MARKERS, TYPE II (DIST STD 66.2) TRAFFIC CONTROL AND PROTECTION AT TURN BAYS (TO REMAIN OPEN TO TRAFFIC) (DIST STD 94.2)
735	PC CONCRETE ISLANDS AND MEDIANS ACCESSIBLE TO THE DISABLED (DIST STD 4.1)
736	STANDARD OUTLET FOR CURB & GUTTER (DIST STD 5.1)
737	BOX CULVERT END SECTIONS SHEET 1 OF 2 (DIST STD 10.1)
738	BOX CULVERT END SECTIONS SHEET 2 OF 2 (DIST STD 10.1)
739	TRAVERSABLE PIPE GRATE FOR BOX CULVERT END SECTIONS SHEET 1 OF 2 (DIST STD 13.1)
740	TRAVERSABLE PIPE GRATE FOR BOX CULVERT END SECTIONS SHEET 2 OF 2 (DIST STD 13.1)
741	ENTRANCE APPROACHES - URBAN AREA (DIST STD 25.1)
742	SEWER AND WATER MAIN CROSSINGS (DIST STD 32.1)
743	CONCRETE COLLARS FOR PIPE OR BOX CULVERT EXTENSIONS (DIST STD 33.1)
744	WORK ZONE SIGN DETAILS SHEET 1 OF 4 (DIST STD 34.1)
745	WORK ZONE SIGN DETAILS SHEET 2 OF 4 (DIST STD 34.1)
746	WORK ZONE SIGN DETAILS SHEET 3 OF 4 (DIST STD 34.1)
747	WORK ZONE SIGN DETAILS SHEET 4 OF 4 (DIST STD 34.1)
748	TEMPORARY ROAD CLOSURE EXPRESSWAY (DIST STD 36.1)
749	TRAFFIC CONTROL TYPICAL WEAVE (DIST STD 39.1)
750	TYPICAL PAVEMENT MARKINGS SHEET 1 OF 3 (DIST STD 41.1)
751	TYPICAL PAVEMENT MARKINGS SHEET 2 OF 3 (DIST STD 44.1)
752	TYPICAL PAVEMENT MARKINGS SHEET 2 OF 3 (DIST STD 44.1)
753	PAINTING DETAILS (DIST STD 44.1)
754	GUARDRAIL REFLECTORS, TYP C (SPECIAL) (DIST STD 55.1)
755	SLOTTED DRAIN PIPE (DIST STD 68.1)
756-825	CROSS SECTIONS - HARRISON AVE / US20 STAGE 1
826-895	CROSS SECTIONS - HARRISON AVE / US20 STAGE 2
896-962	CROSS SECTIONS - HARRISON AVE / US20 STAGE 3
963-1029	CROSS SECTIONS - HARRISON AVE / US20 STAGE 4
1030-1096	CROSS SECTIONS - HARRISON AVE / US20 ULTIMATE
1097-1125	CROSS SECTIONS - I-39
1126-1139	CROSS SECTIONS - RAMP A
1140-1165	CROSS SECTIONS - RAMP B
1166-1183	CROSS SECTIONS - RAMP C
1184-1212	CROSS SECTIONS - RAMP D
1213-1216	CROSS SECTIONS - SOUTH MALL DR
1217-1279	CROSS SECTIONS - PONDS

MODEL: Default
FILE NAME: pw:\benesch-pw.bentley.com:benesch-pw-01\Documents\10800s\10800\00\Eng Docs\CAD Sheets\General\D264R71-ODI-sht-index.dgn

benesch
Alfred Benesch & Company
35 W. Wacker Drive, Suite 3300
Chicago, Illinois 60601
312-565-0150 Job No. 10800.00

USER NAME = agibson	DESIGNED - A.GIBSON	REVISED -	
	DRAWN - T.BLANK	REVISED -	
PLOT SCALE = 0.167 ' / in.	CHECKED - J.TARDY	REVISED -	
PLOT DATE = 10/13/2023	DATE - 10/13/2023	REVISED -	

STATE OF ILLINOIS
DEPARTMENT OF TRANSPORTATION

INDEX OF SHEETS

SCALE: N/A | SHEET 1 OF 1 SHEETS | STA. | TO STA.

F.A.* RTE.	SECTION	COUNTY	TOTAL SHEETS	SHEET NO.
*	(5)RS & (5&5HB)RC	WINNEBAGO	1279	3
		CONTRACT NO. 64R71		
	ILLINOIS FED. AID PROJECT			

* FAI ROUTE 39 (I-39) & FAP ROUTE 525 (US 20)

HIGHWAY STANDARDS

000001-08	STANDARD SYMBOLS, ABBREVIATIONS AND PATTERNS
001001-02	AREAS OF REINFORCEMENT BARS
001006	DECIMAL OF AN INCH AND OF A FOOT
280001-07	TEMPORARY EROSION CONTROL SYSTEMS
420001-10	PAVEMENT JOINTS
420101-07	24' (7.2m) JOINTED PCC PAVEMENT
420106-07	36' (10.8m) JOINTED PCC PAVEMENT
420111-04	PCC PAVEMENT ROUNDOUTS
420206-13	ENTRANCE RAMP TERMINAL (JOINTED PCC RAMP PAVEMENT ADJACENT TO CRC MAINLINE PAVEMENT)
420306-11	EXIT RAMP TERMINAL (JOINTED PCC RAMP PAVEMENT ADJACENT TO CRC MAINLINE PAVEMENT)
421001-03	BAR REINFORCEMENT FOR CRC PAVEMENT
421206-07	36' (10.8m) CRC PAVEMENT (WITH LUG SYSTEM)
424001-11	PERPENDICULAR CURB RAMPS FOR SIDEWALKS
424031-02	MEDIAN PEDESTRIAN CROSSINGS
483001-06	PCC SHOULDER
542001-06	CONCRETE END SECTIONS FOR PIPE CULVERTS 15-IN THRU 84-IN DIA
542301-03	PRECAST REINFORCED CONCRETE FLARED END SECTION
542311-07	TRAVERSABLE PIPE GRATE FOR CONCRETE END SECTION
601001-05	PIPE UNDERDRAINS
601101-02	CONCRETE HEADWALL FOR PIPE UNDERDRAIN
602001-02	CATCH BASIN, TYPE A
602401-07	PRECAST MANHOLE, TYPE A, 4' (1.22m) DIAMETER
602402-03	PRECAST MANHOLE, TYPE A, 5' (1.52m) DIAMETER
602406-11	PRECAST MANHOLE, TYPE A, 6' (1.83m) DIAMETER
602411-09	PRECAST MANHOLE, TYPE A, 7' (2.13m) DIAMETER
602416-09	PRECAST MANHOLE, TYPE A, 8' (2.44m) DIAMETER
602601-06	PRECAST REINFORCED CONCRETE FLAT SLAB TOP
602701-02	MANHOLE STEPS
604001-05	FRAME AND LIDS, TYPE 1
604091-05	FRAME AND GRATE, TYPE 24
606001-08	CONCRETE CURB TYPE B AND COMBINATION CURB AND GUTTER
606301-04	PC CONCRETE ISLANDS AND MEDIANS
630001-13	STEEL PLATE BEAM GUARDRAIL
631011-10	TRAFFIC BARRIER TERMINAL, TYPE 2
635001-02	DELINEATORS
637006-05	CONCRETE BARRIER, DOUBLE FACE, 44 in. (1120 mm) HEIGHT
642001-03	SHOULDER RUMBLE STRIPS, 16 IN.
664001-02	CHAIN LINK FENCE
666001-01	RIGHT-OF-WAY MARKERS
701001-02	OFF-ROAD OPERATIONS, 2L, 2W, MORE THAN 15' (4.5 m) AWAY
701006-05	OFF-ROAD OPERATIONS, 2L, 2W, 15' (4.5 m) TO 24" (600mm FROM PAVEMENT EDGE
701011-04	OFF-ROAD MOVING OPERATIONS, 2L, 2W, DAY ONLY
701101-05	OFF-ROAD OPERATIONS, MULTILANE, 15' (4.5m) TO 24" (600mm) FROM PAVEMENT EDGE
701106-02	OFF-ROAD OPERATIONS, MULTILANE, MORE THAN 15' (4.5m) AWAY
701301-04	LANE CLOSURE, 2L, 2W, SHORT TIME OPERATIONS
701311-03	LANE CLOSURE, 2L, 2W, MOVING OPERATIONS - DAY ONLY
701400-12	APPROACH TO LANE CLOSURES, FREEWAY/EXPRESSWAY
701401-13	LANE CLOSURE, FREEWAY/EXPRESSWAY
701411-09	LANE CLOSURE, MULTILANE, AT ENTRANCE OR EXIT RAMP, FOR SPEEDS > 45 MPH
701416-11	LANE CLOSURE, FREEWAY/EXPRESSWAY, WITH CROSSOVER AND BARRIER
701422-10	LANE CLOSURE, MULTILANE, FOR SPEEDS > 45 MPH TO 55 MPH
701426-09	LANE CLOSURE, MULTILANE, INTERMITTENT OR MOVING OPERATION, FOR SPEEDS > 45 MPH
701427-05	LANE CLOSURE, MULTILANE, INTERMITTENT OR MOVING OPERATION, FOR SPEEDS < 40 MPH
701428-01	TRAFFIC CONTROL, SETUP AND REMOVAL, FREEWAY/EXPRESSWAY
701451-05	RAMP CLOSURE FREEWAY/EXPRESSWAY
701456-05	PARTIAL EXIT RAMP CLOSURE FREEWAY/EXPRESSWAY
701501-06	URBAN LANE CLOSURE, 2L, 2W UNDIVIDED
701601-09	URBAN LANE CLOSURE, MULITLANE, 1W OR 2W WITH NONTRAVERSABLE MEDIAN
701701-10	URBAN LANE CLOSURE, MULTILANE INTERSECTION
701801-06	SIDEWALK, CORNER OR CROSSWALK CLOSURE
701901-09	TRAFFIC CONTROL DEVICES
704001-08	TEMPORARY CONCRETE BARRIER
720001-01	SIGN PANEL MOUNTING DETAILS
720006-04	SIGN PANEL ERECTION DETAILS
720011-01	METAL POSTS FOR SIGNS, MARKERS AND DELINEATORS
720016-04	MAST ARM MOUNTED STREET NAME SIGNS
720021-03	SIGN PANELS, EXTRUDED ALUMINUM TYPE
728001-01	TELESCOPING STEEL SIGN SUPPORT
780001-05	TYPICAL PAVEMENT MARKINGS
781001-04	TYPICAL APPLICATIONS RAISED REFLECTIVE PAVEMENT MARKERS
782006-01	GUARDRAIL AND BARRIER WALL REFLECTOR MOUNTING DETAILS
805001-01	ELECTRICAL SERVICE INSTALLATION DETAILS
814001-03	HANDHOLES
814006-03	DOUBLE HANDHOLES
821101-02	LUMINAIRE WIRING IN POLE
825026-04	LIGHTING CONTROLLER, BASE MOUNTED, 480V
830006-05	LIGHT POLE ALUMINUM DAVIT ARM
830026-01	TEMPORARY ROADWAY LIGHTING
836001-04	LIGHT POLE FOUNDATION
838001-01	BREAKAWAY DEVICES
857001-01	STANDARD PHASE DESIGNATION DIAGRAMS AND PHASE SEQUESNCES
862001-01	UNINTERRUPTABLE POWER SUPPLY (UPS)
873001-02	TRAFFIC SIGNAL GROUNDING AND BONDING
877001-08	STEEL MAST ARM ASSEMBLY AND POLE 16' THROUGH 55'
877002-04	STEEL MAST ARM ASSEMBLE AND POLE 56' THROUGH 75'
877011-10	STEEL COMBINATION MAST ARM ASSEMBLY AND POLE 16' THROUGH 55'
877012-07	STEEL COMBINATION MAST ARM ASSEMBLY AND POLE 56' THROUGH 75'
878001-11	CONCRETE FOUNDATION DETAILS
880006-01	TRAFFIC SIGNAL MOUNTING DETAILS

MODEL: Default
FILE NAME: pw:\benesch-pw.bentley.com:benesch-pw-01\Documents\10800s\10800.00\Eng_Docs\CAD_Sheets\General\D764R71-2D\Lst-Standards.dgn

benesch
Alfred Benesch & Company
35 W. Wacker Drive, Suite 3300
Chicago, Illinois 60601
312-565-0150 Job No. 10800.00

USER NAME = crutkowski	DESIGNED - A.GIBSON	REVISED -	STATE OF ILLINOIS DEPARTMENT OF TRANSPORTATION	LIST OF HIGHWAY STANDARDS	
	DRAWN - T.BLANK	REVISED -			
PLOT SCALE = 0.167 ' / in.	CHECKED - J.TARDY	REVISED -			
PLOT DATE = 11/28/2023	DATE - 10/13/2023	REVISED -		SCALE: N/A SHEET 1 OF 1 SHEETS STA. TO STA.	

F.A.* RTE.	SECTION	COUNTY	TOTAL SHEETS	SHEET NO.
*	(5)RS & (5&5HB)RC	WINNEBAGO	1279	4
		CONTRACT NO. 64R71		
	ILLINOIS	FED. AID PROJECT		

* FAI ROUTE 39 (I-39) & FAP ROUTE 525 (US 20)

GENERAL NOTES

1. THE CONTRACTOR SHALL SEED ALL DISTURBED AREAS WITHIN THE PROJECT LIMITS. SEEDING CLASS 4, 2A AND 5C SHALL BE USED EXCEPT IN FRONT OF PROPERTIES WHERE THE GRASS WILL BE MOWED, THEN USE SEEDING CLASS 1A. CLASS 5 AND 5C (MONARCH AND POLLINATOR MIX) SEED SHALL BE USED ON BACK SLOPES AND FORE SLOPES IN THE PROJECT. CLASS 2A SHALL BE USED IN DITCH BOTTOMS. CLASS 4 SHALL BE USED BEHIND TYPE A GUTTER, AND AREAS BEHIND THE BACK SLOPE, AND BEYOND THE TOE OF FRONT SLOPE ON FILL SECTIONS WITHOUT DITCHES.

2. PREVIOUSLY PUGMILLED STOCKPILES OF "TYPE A" OLDER THAN 1 MONTH WILL NOT BE APPROVED FOR USE UNTIL A MOISTURE CHECK IS RUN TO VERIFY MOISTURE CONTENT. MATERIAL SHIPPED TO PROJECTS WITHOUT BEING TESTED WILL NOT BE ACCEPTED.

3. PLACEMENT AND COMPACTION OF THE BACKFILL FOR THE PROPOSED ACROSS ROAD CULVERTS AND EXISTING ACROSS ROAD CULVERTS THAT ARE REMOVED, SHALL CONFORM TO ARTICLE 502.10 OF THE STANDARD SPECIFICATIONS, EXCEPT THAT THE MATERIAL, EITHER PRODUCTION AGGREGATE OR EXCAVATED MATERIAL, SHALL CONFORM TO ARTICLE 208.02 OF THE STANDARD SPECIFICATIONS, AND SHALL BE COMPACTED TO A MINIMUM OF 95% OF THE STANDARD LABORATORY DENSITY. THE TOP ONE FOOT OF TRENCH BACKFILL SHALL BE GRADATION CA06 OR CA10, BENEATH THE PROPOSED PAVEMENT/PATCH.

   THE ENTIRE EXCAVATION, WITHIN 2 FEET OUTSIDE OF EACH SHOULDER, SHALL BE BACKFILLED WITH TRENCH BACKFILL MATERIAL TO THE BOTTOM OF THE PROPOSED PAVEMENT/PATCH. IMPERVIOUS MATERIAL SHALL BE USED ON THE OUTER 3 FEET AT EACH END OF THE CULVERT.

   THE TRENCH BACKFILL MATERIAL WILL BE MEASURED FOR PAYMENT IN ACCORDANCE WITH ARTICLE 502.12, NOT TO EXCEED 2 FEET OUTSIDE THE STRUCTURE.

4. COST OF REMOVAL AND DISPOSAL OF MATERIAL FROM THE TEMPORARY PATCH SHALL BE INCLUDED IN AGGREGATE BASE COURSE, TYPE B.

5. THE AREA TO BE TACKED OR PRIMED SHALL BE LIMITED TO THAT WHICH CAN BE COVERED WITH HMA ON THE NEXT DAY'S PRODUCTION, BUT NO MORE THAN FIVE DAYS IN ADVANCE OF THE PLACEMENT OF HMA, UNLESS APPROVED BY THE ENGINEER.

6. THE CONTRACTOR WILL BE REQUIRED TO FURNISH 5 ½" HIGH BRASS STENCILS AS APPROVED BY THE ENGINEER AND INSTALL STATIONING AT 250' INTERVALS. STATIONING SHALL BE PLACED ON BOTH LANES OF 2 LANE HIGHWAYS AND ON THE OUTSIDE LANES IN BOTH DIRECTIONS ON 4-LANE HIGHWAYS. THE STATIONS SHALL BE PLACED 6" INSIDE THE PAVEMENT MARKING EDGE SO THEY CAN BE READ FROM THE SHOULDER. THIS WORK WILL BE INCLUDED IN THE COST OF THE FINAL PAVEMENT SURFACE.

7. THE SOILS REPORT AND PROFILES ARE AVAILABLE AT THE DISTRICT OFFICE FOR CONTRACTORS REVIEW.

8. CULVERT & BRIDGE FLOWS MUST BE MAINTAINED THROUGHOUT THE PROJECT. NORMAL FLOW SHALL BE ALLOWED TO PASS AT THE RATE IT ENTERS THE JOBSITE. HIGH FLOWS SHALL BE ALLOWED TO PASS WITHOUT CAUSING DAMAGE TO UPSTREAM PROPERTIES.

9. PRECAST GRATED INLET SPECIALS MAY BE SUBSTITUTED IN LIEU OF CAST-IN-PLACE UNITS WITH FLOORS UPON RECEIPT OF MANUFACTURER'S SHOP DRAWINGS WHICH HAVE BEEN APPROVED BY THE DEPARTMENT. THE CONTRACTOR SHALL BE RESPONSIBLE FOR VERIFYING NECESSARY DIMENSIONS ON THE EXISTING DRAINAGE STRUCTURE REQUIRED FOR THE ATTACHMENT. NO ADDITIONAL COST FOR THIS SUBSTITUTION SHALL BE ALLOWED.

10. THE COST OF MAKING STORM SEWER CONNECTIONS TO EXISTING DRAINAGE STRUCTURES SHALL BE INCLUDED IN THE VARIOUS CONTRACT UNIT PRICES FOR STORM SEWER.

11. THE LATERAL OFFSET AND RIM ELEVATION FOR DRAINAGE STRUCTURES IN THE CURB/GUTTER IS TO THE EDGE OF PAVEMENT. THE LATERAL OFFSET AND RIM ELEVATION FOR NON-CURB/GUTTER STRUCTURES IS TO THE CENTER OF STRUCTURE.

12. DELINEATORS SHALL BE INSTALLED AS SHOWN IN STANDARD 635001, EXCEPT THAT THE POST SHALL BE ROTATED 180° AND ONLY METAL-BACKED DELINEATORS SHALL BE PERMITTED. DELINEATORS SHALL BE PLACED AT THE ENDS OF APPROACH GUARDRAIL TERMINAL SECTIONS, AND AT EACH HEADWALL OR END SECTION OF AR CULVERTS. THIS WORK WILL BE PAID FOR AT THE CONTRACT UNIT PRICE EACH FOR DELINEATORS.

13. THE CONTRACTOR SHALL BE RESPONSIBLE FOR COLLECTING AND MAINTAINING AN ELECTRONIC LOG OF ALL STAKEOUT SURVEY THAT IS PERFORMED ON THE JOB, EITHER BY HIM/HER OR ANY SUB-CONTRACTOR PERFORMING THE STAKEOUT. UPON REQUEST, ALL LOGS SHALL BE SUBMITTED TO THE DEPARTMENT. NO ADDITIONAL COMPENSATION WILL BE ALLOWED FOR THIS WORK, BUT SHALL BE CONSIDERED INCLUDED IN THE COST FOR CONSTRUCTION LAYOUT.

14. PAVEMENT MARKING SHALL BE DONE ACCORDING TO STANDARD 780001, EXCEPT AS FOLLOWS:

    1. ALL WORDS, SUCH AS ONLY, SHALL BE 8 FEET HIGH.
    2. ALL NON-FREEWAY ARROWS SHALL BE THE LARGE SIZE.
    3. THE DISTANCE BETWEEN YELLOW NO-PASSING LINES SHALL BE 8 INCHES, NOT 7 INCHES, AS SHOWN IN THE DETAIL OF TYPICAL LANE AND EDGE LINES.
    4. CENTERLINE SKIP DASH PAVEMENT MARKING ON MULTI-LANE DIVIDED, MULTI-LANE UNDIVIDED, AND ONE-WAY ROADWAY SHALL BE ACCORDING TO DISTRICT STANDARD 41.1.

GENERAL NOTES, (cont'd)

15. PERMANENT SURVEY MARKERS, TYPE II, SHALL BE SET AT INTERVALS OF 1 MILE OR AS DIRECTED BY THE ENGINEER. BRIDGE OR CULVERT PROJECTS SHALL HAVE ONE SURVEY MARKER PLACED NEAR THE STRUCTURE. ESTIMATED: 1 EACH.

16. PERMANENT SURVEY MARKERS, TYPE II PLACED IN URBAN AREAS SHOULD BE PLACED IN SIDEWALK AREAS. THE MARKER SHALL BE PLACED AS SHOWN ON DISTRICT STANDARD 66.2. THE SIDEWALK SHALL BE PLACED AROUND THE MARKER AND FLUSH WITH THE TOP.

17. PERMANENT SURVEY MARKERS, TYPE II SHALL BE CAST-IN-PLACE AS SHOWN ON DISTRICT STANDARD 66.2, OR ANOTHER OPTION WOULD BE TO INSTALL A VAULTED STYLE MONUMENT AS DESCRIBED BY NGS AS A 3D MONUMENT (TOP SECURITY SLEEVE ROD MONUMENT), WITH INSTALLATION INSTRUCTIONS PROVIDED BY THE DISTRICT CHIEF OF SURVEYS. IF POURED IN PLACE, THE BOTTOM OF THE MARKER SHALL BE 5'-0" BELOW THE GROUND SURFACE.

18. THE PERMANENT SURVEY MARKERS, IF POSSIBLE, SHALL BE INSTALLED AT THE BEGINNING OF THE JOB AND PROTECTED THROUGHOUT.

19. THE CONTRACTOR SHALL SUBMIT TO THE ENGINEER A DESCRIPTION OF LOCATION, ELEVATION, AND COORDINATES FOR EACH PERMANENT SURVEY MARKER. THE HORIZONTAL COORDINATES MUST BE DERIVED BY GPS AND THE ELEVATION DERIVED USING AN ELECTRONIC LEVEL. THE META DATA, SUCH AS THE GEOID USED, (NGS ADJUSTMENT IE: 97 HARN, 03, 07), AND THE BASE POINT(S) NAME OR NUMBER SHALL BE SUBMITTED ALONG WITH A COMPLETE COLLECTION LOG. IF COLLECTED USING RTK METHOD, IT WILL REQUIRE EITHER 3 COLLECTIONS (AVERAGED) FROM 2 DIFFERENT BASES, OR A MINIMUM OF 3 COLLECTIONS (AVERAGED), AT LEAST 2 HOURS APART, FROM THE SAME BASE. IF USING A CORS TYPE NETWORK, THE COLLECTION PROCEDURE SHALL INCLUDE LOCALIZING WITH CHECK SHOTS ON AT LEAST 2 DIFFERENT HARN MONUMENTS BOTH BEFORE AND AFTER COLLECTION. THE LEVEL CIRCUIT SHALL BE RUN FROM FURNISHED MARK TO FURNISHED MARK AND THEN ADJUSTED. THE ERROR OF CLOSURE SHALL BE SUBMITTED WITH THE ELECTRONIC LEVEL NOTES IN A RECOGNIZED FORMAT APPROVED BY THE ENGINEER AND/OR THE CHIEF OF SURVEYS. THE ENGINEER SHALL SUBMIT THIS INFORMATION TO THE DISTRICT CHIEF OF SURVEYS.

20. ALL GUTTER OUTLETS SHALL BE EXTENDED TO DITCH FLOW AS DIRECTED BY THE ENGINEER.

21. RIGHT-OF-WAY MARKERS WILL BE ERECTED PER HIGHWAY STANDARD 666001 WITH THE BACK FACE OF THE MARKER 12 INCHES INSIDE THE NEW RIGHT-OF-WAY LINE. THE METHOD OF INSTALLATION SHALL BE APPROVED BY THE ENGINEER.

22. THE FOLLOWING LISTED UTILITIES LOCATED WITHIN THE PROJECT LIMITS OR IMMEDIATELY ADJACENT TO THE PROJECT CONSTRUCTION LIMITS ARE MEMBERS OF JULIE:

NAME	COMPANY	TYPE	PHONE NUMBER
SAKI FORAH	NICOR	GAS	630-388-3019
KYLE GRUHN	FOUR RIVERS SANITATION AUTHORITY	SEWER	815-387-7400
KEITH KOSHINSKI	COMCAST CABLE	CATV	224-229-5432
BUTCH FORKELL	STRATUS NETWORKS	COMMUNICATIONS	309-696-6349
LANCE SANDY	IFIBER	COMMUNICATIONS	815-753-5798
STEVE STRASSER	VILLAGE OF CHERRY VALLEY	WATER & SEWER	815-332-3441
ADAM VICKERY	FRONTIER (NORTH)	TELEPHONE	815-323-0708
HECTOR GARCIA	AT&T	TELEPHONE	630-573-5465
RONALD KONOPASEK	COMMONWEALTH EDISON CO.	ELECTRIC	309-883-4400

IDOT IS NOT A MEMBER OF JULIE. IF YOU ARE NEAR ANY OVERHEAD LIGHTING, INTERSECTION LIGHTING OR TRAFFIC SIGNALS, CONTACT THE ELECTRICAL CONTRACTOR AT LEAST 48 HOURS PRIOR TO WORK.

23. THE CONTRACTOR IS RESPONSIBLE FOR LOCATING ALL EXISTING STATE OWNED LIGHTING, FIBER OPTIC, AND/OR TRAFFIC SIGNAL UTILITIES.

24. IT SHALL BE THE CONTRACTOR'S RESPONSIBILITY TO CONTACT THE MUNICIPALITY TO DETERMINE APPROVED METHODS OF UTILITY STRUCTURE ADJUSTMENT. UTILITY STRUCTURES MAY INCLUDE, BUT ARE NOT LIMITED TO, MANHOLES, WATER VALVES, HANDHOLES, ETC. ALL MATERIALS AND WORK NECESSARY TO COMPLETE ADJUSTMENTS PER MUNICIPALITY REQUIREMENTS SHALL BE CONSIDERED INCLUDED IN THE COST OF THE ASSOCIATED ADJUSTMENT PAY ITEM.

25. RELOCATE TEMPORARY IMPACT ATTENUATORS SHALL INCLUDE STORAGE AND TRANSPORTATION TO AND FROM STORAGE, WHEN THE DEVICE IS NOT NEEDED FOR A TIME, AS SHOWN ON THE STAGING PLANS. THIS SHALL BE INCLUDED IN THE CONTRACT UNIT PRICE PER EACH FOR IMPACT ATTENUATORS, RELOCATE OF THE TYPE SPECIFIED.

GENERAL NOTES, (cont'd)

26. WHEN RELOCATED TEMPORARY CONCRETE BARRIER IS SPECIFIED, THE WALL SHALL BE REMOVED, STORED AND TRANSPORTED TO AND FROM STORAGE, WHEN THE WALL IS NOT NEEDED FOR A TIME AS SHOWN ON THE STAGING PLANS, RELOCATED AND REINSTATED AT THE NEW LOCATION. THE REINSTALLATION REQUIREMENTS SHALL BE THE SAME AS THOSE FOR A NEW INSTALLATION. THIS WORK SHALL BE PAID FOR AT THE CONTRACT UNIT PRICE PER FOOT FOR RELOCATE TEMPORARY CONCRETE BARRIER.

27. THE CONTRACTOR SHALL TAKE PRECAUTIONS TO PERFORM GRADING ACTIVITIES AT/NEAR ANY FENCE TO REMAIN. ANY DAMAGE TO THE EXISTING FENCE TO REMAIN WILL BE REPAIRED OR REPLACED BY THE CONTRACTOR AT NO ADDITIONAL COST TO THE CONTRACT.

28. WORK FOR REMOVING AND REPLACING FENCES AT THE PARCELS NOTED BELOW IS BEING COMPLETED VIA TEMPORARY USE PERMITS. TREE REMOVALS SHOULD BE AVOIDED AT THESE LOCATIONS. THE PROPERTY OWNERS SHALL BE CONTACTED 2 WEEKS IN ADVANCE. THE DISTRICT WILL PROVIDE CONTACT INFORMATION UPON REQUEST.
    PARCEL NO. 16-02-226-003
    PARCEL NO. 16-02-226-008
    PARCEL NO. 16-02-226-007
    PARCEL NO. 16-01-101-001

29. TOLLWAY PERMIT AND BOND - THE CONTRACTOR WILL BE REQUIRED TO OBTAIN A PERMIT FROM THE ILLINOIS STATE TOLL HIGHWAY AUTHORITY (ISTHA) ACCORDING TO ARTICLE 107.04 OF THE STANDARD SPECIFICATIONS PRIOR TO INITIATING ANY LANE CLOSURES ON THE TOLLWAY OR DOING ANY WORK ON THE ISTHA RIGHT OF WAY. AS PART OF THE PERMIT, THE CONTRACTOR WILL BE REQUIRED TO POST A SURETY BOND WITH THE ISTHA. THE CONTRACTOR WILL FURNISH A COPY OF THE AUTHORIZED PERMIT TO THE ENGINEER.

30. COORDINATION WITH ISTHA WILL BE AS FOLLOWS: THE CONTRACTOR WILL NOTIFY THE ENGINEER 14 CALENDAR DAYS PRIOR TO COMMENCEMENT OF ANY WORK ON OR AFFECTING AN ILLINOIS TOLLWAY, SO AS TO PROVIDE THE OPPORTUNITY TO ALERT THE MOTORING PUBLIC OF POSSIBLE DELAYS. THE ENGINEER OR CORRIDOR CONSTRUCTION MANAGER WILL NOTIFY ILLINOIS TOLLWAY OF THE START OF WORK. THE CONTRACTOR MUST SECURE A PERMIT FROM ILLINOIS TOLLWAY FOR ALL WORK ON I-39 UNDER ILLINOIS TOLLWAY JURISDICTION. INDEMNIFICATION TO THE FULLEST EXTENT PERMITTED BY LAW, THE CONTRACTOR WILL INDEMNIFY AND SAVE HARMLESS THE ILLINOIS TOLLWAY IN ACCORDANCE WITH ARTICLE 107.26 OF ILLINOIS TOLLWAY SUPPLEMENTAL SPECIFICATIONS.

31. IN ADDITION TO TRAFFIC STAGING ON TOLLWAY PROPERTY, THE CONTRACTOR SHALL BE AWARE THAT CONTRACT 64R71 WILL INCLUDE WORK TO IDOT ROADWAYS THAT LIE WITHIN TOLLWAY-OWNED RIGHT-OF-WAY PARCELS. THE CONTRACTOR SHALL COORDINATE WITH TOLLWAY TO OBTAIN ALL NECESSARY PERMITS AND PERMISSIONS FOR ACCESS ONTO THE TOLLWAY-OWNED PARCELS PRIOR TO THE START OF CONSTRUCTION ACTIVITIES. THESE PARCELS INCLUDE BOTH THE OUTER PARCEL ALONG RAMP DB (WB HARRISON TO NB I-39), AND ALL OF THE PARCELS ALONG I-39 NORTH OF STATION 2738+00 (APPROXIMATELY 1,400' NORTH OF HARRISON AVE).

32. THE CONTRACTOR SHALL CONTACT BEN CHRISTIANSEN OF THE FOUR RIVERS SANITARY AUTHORITY AT (815) 209-7952, FORTY-EIGHT (48) MINIMUM, HOURS PRIOR TO PERFORMING ANY SANITARY SEWER WORK, INCLUDING ANY WORK THAT WILL BE PERFORMED WHERE THERE IS LESS THAN 18 INCHES OF VERTICAL SEPARATION BENEATH OR ABOVE SANITARY SEWERS.

33. FOR ILLINOIS TOLLWAY LIGHTING, PLEASE CONTACT THE GENERAL ENGINEERING CONSULTANT TASHA STEINER AT TASHA.STEINER@WSP.COM OR 410-454-9751.

PROJECT COMMITMENTS

TREES THREE (3) INCHES OR GREATER IN DIAMETER LOCATED OUTSIDE THE LIMITS OF THE EXISTING INTERCHANGE INFIELDS CAN ONLY BE CLEARED FROM OCTOBER 1 THROUGH OCTOBER 15 OF ANY CONSTRUCTION YEAR.

TREES THREE (3) INCHES OR GREATER IN DIAMETER LOCATED IN THE LIMITS OF THE EXISTING INTERCHANGE INFIELDS CAN BE CLEARED FROM OCTOBER 1 THROUGH APRIL 1 OF ANY CONSTRUCTION YEAR.

CLASS 4A AND 5 SEED SHALL BE USED ON ALL BACK SLOPE AND FORE SLOPES ON THE PROJECT. PLEASE REFER TO SPECIAL PROVISION FOR ADDITIONAL INFORMATION AND FOLLOW THE SPECS IN SECTION 250 OF THE MANUAL FOR ANY TEMPORARY DISTURBANCE WITHIN THE PROJECT LIMITS.

THE PROJECT SPONSER WILL BEGIN MOWING AND CONTINUE TO MOW WITHIN THE LIMITS OF THE PROPOSED IMPROVEMENT FROM MARCH 15 - OCTOBER 15. THE MOWING SHOULD BE KEPT AT A HEIGHT OF 6".

MODEL: Default
FILE NAME: pw://benesch-pw.bentley.com:benesch-pw-01/Documents/10800s/10800_00/Eng_Docs/CAD Sheets/General/D264R71-GDI-sht-GenNotes-01.dgn

benesch
Allied Benesch & Company
35 W. Wacker Drive, Suite 3300
Chicago, Illinois 60601
312-565-0450 Job No. 10800_00

USER NAME = crutkowski	DESIGNED - A.GIBSON	REVISED -
	DRAWN - A.GIBSON	REVISED -
PLOT SCALE = 0.167 ' / In.	CHECKED - J.TARDY	REVISED -
PLOT DATE = 11/27/2023	DATE - 10/13/2023	REVISED -

STATE OF ILLINOIS
DEPARTMENT OF TRANSPORTATION

GENERAL NOTES

SCALE: N/A | SHEET 1 OF 1 SHEETS | STA. | TO STA.

F.A.* RTE.	SECTION	COUNTY	TOTAL SHEETS	SHEET NO.
*	(5)RS & (5&5HB)RC	WINNEBAGO	1279	5
		CONTRACT NO. 64R71		
	ILLINOIS FED. AID PROJECT			

* FAI ROUTE 39 (I-39) & FAP ROUTE 525 (US 20)

HOT-MIX ASPHALT TABLE (IDOT)

LOCATION AND MIXTURE USE(S):	I-39 & HARRISON/US 20 STABILIZED SUBBASE	TEMPORARY PAVEMENT 13.5" AT I-39	TEMPORARY PAVEMENT 9" AT HARRISON/RAMPS	TEMPORARY PAVEMENT VARIABLE THICKNESS	SOUTH MALL DRIVE HOT-MIX ASPHALT PAVEMENT (FULL DEPTH) 13.5"		HOT MIX ASPHALT SHOULDER, 8"		HOT-MIX ASPHALT SHARED-USE PATH	TEMPORARY CROSSOVER PAVEMENT
					SURFACE	BINDER	SURFACE	BINDER		
THICKNESS:	4"	13.5"	9"	VARIES	2"	11.5"	2"	6"	6"	2"
PG:	PG 64-22	PG 64-22	PG 64-22	PG 64-22	SBS PG 64-28	PG 58-28	PG 64-22	PG 64-22	PG 64-22	PG 64-22
DESIGN AIR VOIDS:	4.0% @ N50	4.0% @ N70	4.0% @ N70	4.0% @ N70	4.0% @ N70	4.0% @ N70	4.0% @ N70	4.0% @ N70	4.0% @ N50	4.0% @ N50
MIXTURE COMPOSITION:	IL-9.5, 9.5FG or 19.0	IL-19.0	IL-19.0	IL-19.0	IL-9.5	IL-19.0	IL-9.5	IL-19.0	IL-9.5	IL-9.5
FRICTION AGGREGATE:	N/A	N/A	N/A	N/A	D	N/A	D	N/A	N/A	N/A
MIXTURE WEIGHT:	112 LBS/SY/IN	112 LBS/SY/IN	112 LBS/SY/IN	112 LBS/SY/IN	112 LBS/SY/IN	112 LBS/SY/IN	112 LBS/SY/IN	112 LBS/SY/IN	112 LBS/SY/IN	112 LBS/SY/IN
QUALITY MANAGEMENT PROGRAM:	QC/QA	QC/QA	QC/QA	QC/QA	QC/QA	QC/QA	QC/QA	QC/QA	QC/QA	QC/QA
SUBLOT SIZE:	N/A	N/A	N/A	N/A	N/A	N/A	N/A	N/A	N/A	N/A
MATERIAL TRANSFER DEVICE	NO	NO	NO	NO	NO	NO	NO	NO	NO	NO

HOT-MIX ASPHALT TABLE (ISTHA)

LOCATION AND MIXTURE USE(S):	HOT-MIX ASPHALT SHOULDER, 6"	
	SURFACE	BINDER
THICKNESS:	1 1/2"	4 1/2"
PG:	PG 64-22	PG 64-22
DESIGN AIR VOIDS:	4.0% @ N70	4.0% @ N70
MIXTURE COMPOSITION:	IL-9.5	IL-19.0
FRICTION AGGREGATE:	D	N/A
MIXTURE WEIGHT:	112 LBS/SY/IN	112 LBS/SY/IN
QUALITY MANAGEMENT PROGRAM:	QC/QA	QC/QA
SUBLOT SIZE:	N/A	N/A
MATERIAL TRANSFER DEVICE	NO	NO

MODEL: Default
FILE NAME: pw://benesch-pw.bentley.com:benesch-pw-01/Documents/10800s/10800,00/Eng_Docs/CAD Sheets/General/D264R71-D01-sht-GenNotes-02.dgn

benesch
Allied Benesch & Company
35 W. Wacker Drive, Suite 3300
Chicago, Illinois 60601
312-565-0450 Job No. 10800,00

USER NAME = aglbson	DESIGNED - A.GIBSON	REVISED -	STATE OF ILLINOIS DEPARTMENT OF TRANSPORTATION
	DRAWN - A.GIBSON	REVISED -	
PLOT SCALE = 0.167 ' / In.	CHECKED - J.TARDY	REVISED -	
PLOT DATE = 10/11/2023	DATE - 10/13/2023	REVISED -	

HMA TABLE

SCALE: N/A | SHEET 1 OF 1 SHEETS | STA. | TO STA.

F.A.* RTE.	SECTION	COUNTY	TOTAL SHEETS	SHEET NO.
*	(5)RS & (5&5HB)RC	WINNEBAGO	1279	6
		CONTRACT NO. 64R71		
	ILLINOIS	FED. AID PROJECT		

* FAI ROUTE 39 (I-39) & FAP ROUTE 525 (US 20)

* 5TH COLUMN SHOULD READ TOLLWAY/100% STATE THROUGHOUT SOQ

				US 20 (EAST OF I-39)	HARRISON AVE (WEST OF I-39)	MALL DR	I-39 AND DDI RAMPS	I-39	BIKE PATH	ROADWAY LIGHTING & TEMPORARY TRAFFIC SIGNALS	FIBER	ROADWAY SIGNING		TRAFFIC SIGNALS		
				ROADWAY	ROADWAY	ROADWAY	ROADWAY	ROADWAY	HARRISON AVE	I-39, HARRISON AVE, AND DDI RAMPS	I-39	I-39 AND DDI RAMPS	HARRISON AVE	DDI RAMPS	MALL DR	MALL DR
				0003	0003	0004	0003	0021	0021	0021	0043	0044	0044	0021	0021	0021
CODE NO.	ITEM DESCRIPTION	UNIT	TOTAL QUANTITY	80% FED 20% STATE	80% FED 20% STATE	80% FED 20% STATE	80% FED 20% STATE	*TOLLWAY/ 100% STATE	80% FED 20% STATE	80% FED 20% STATE	100% STATE	80% FED 20% STATE	80% FED 20% STATE	80% FED 20% STATE	80% FED 20% VILLAGE	100% CVFPD
20100110	TREE REMOVAL (6 TO 15 UNITS DIAMETER)	UNIT	662	86			576									
20100210	TREE REMOVAL (OVER 15 UNITS DIAMETER)	UNIT	716	16	33		667									
20100500	TREE REMOVAL, ACRES	ACRE	2.50				2.50									
20200100	EARTH EXCAVATION	CU YD	331,745	14,593	28,630	572	287,950									
* 20201200	REMOVAL AND DISPOSAL OF UNSUITABLE MATERIAL	CU YD	18,988	9,106	9,882											
20400800	FURNISHED EXCAVATION	CU YD	9,888	1,345	4,846		3,697									
20800150	TRENCH BACKFILL	CU YD	6,642	2,716	2,997	319	610									
21101505	TOPSOIL EXCAVATION AND PLACEMENT	CU YD	28,452	4,143	4,893	72	19,344									
21101615	TOPSOIL FURNISH AND PLACE, 4"	SQ YD	27,747	7,635	9,509		10,603									
21101645	TOPSOIL FURNISH AND PLACE, 12"	SQ YD	100				100									
25000210	SEEDING, CLASS 2A	ACRE	20.00				20.00									
25000310	SEEDING, CLASS 4	ACRE	24.00				24.00									
25000312	SEEDING, CLASS 4A	ACRE	12.00				12.00									
25000320	SEEDING, CLASS 5	ACRE	12.00				12.00									

*= SPECIALTY ITEM

* SPECIALTY ITEM
\# NON-PARTICIPATING ITEM (100% STATE)
#FR NON-PARTICIPATING ITEM (100% FOUR RIVERS SANITARY)
#CV NON-PARTICIPATING ITEM (100% VILLAGE OF CHERRY VALLEY)

MODEL: Default
FILE NAME: pw:\\benesch-pw.bentley.com:benesch-pw-01\Documents\10800s\10800\10800.00\Eng Docs\CAD Sheets\General\D764R71-DOI-sht-SOQ-01.dgn

benesch
Allied Benesch & Company
35 W. Wacker Drive, Suite 3300
Chicago, Illinois 60601
312.565.0450 Job No. 10800.00

USER NAME = jMajcher	DESIGNED - A.GIBSON	REVISED -
	DRAWN - N.REYNOLDS	REVISED -
PLOT SCALE = 0.167 ' / in.	CHECKED - J.TARDY	REVISED -
PLOT DATE = 12/6/2023	DATE - 10/13/2023	REVISED -

STATE OF ILLINOIS
DEPARTMENT OF TRANSPORTATION

SUMMARY OF QUANTITIES

SCALE: N/A | SHEET 1 OF 29 SHEETS | STA. | TO STA.

F.A.* RTE.	SECTION	COUNTY	TOTAL SHEETS	SHEET NO.
*	(5)RS & (5&5HB)RC	WINNEBAGO	1279	7
		CONTRACT NO. 64R71		
	ILLINOIS	FED. AID PROJECT		

* FAI ROUTE 39 (I-39) & FAP ROUTE 525 (US 20)

REV. 12/11/23

				US 20 (EAST OF I-39)	HARRISON AVE (WEST OF I-39)	MALL DR	I-39 AND DDI RAMPS	I-39	BIKE PATH	ROADWAY LIGHTING & TEMPORARY TRAFFIC SIGNALS	FIBER	ROADWAY SIGNING		TRAFFIC SIGNALS		
				ROADWAY	ROADWAY	ROADWAY	ROADWAY	ROADWAY	HARRISON AVE	I-39, HARRISON AVE, AND DDI RAMPS	I-39	I-39 AND DDI RAMPS	HARRISON AVE	DDI RAMPS	MALL DR	MALL DR
	CODE NO.	ITEM DESCRIPTION	UNIT	TOTAL QUANTITY	0003	0003	0004	0003	0021	0021	0043	0044	0044	0021	0021	0021
					80% FED 20% STATE	80% FED 20% STATE	80% FED 20% STATE	80% FED 20% STATE	100% TOLLWAY	80% FED 20% STATE	100% STATE	80% FED 20% STATE	80% FED 20% STATE	80% FED 20% STATE	80% FED 20% VILLAGE	100% CVFPD
	25000400	NITROGEN FERTILIZER NUTRIENT	POUND	4,880				4,880								
	25000500	PHOSPHORUS FERTILIZER NUTRIENT	POUND	4,880				4,880								
	25000600	POTASSIUM FERTILIZER NUTRIENT	POUND	4,880				4,880								
#	25000750	MOWING	ACRE	71.00	71.00											
	25100127	MULCH, METHOD 3A	ACRE	54.00				54.00								
	25100900	TURF REINFORCEMENT MAT	SQ YD	2,702	1,364			1,338								
	28000250	TEMPORARY EROSION CONTROL SEEDING	POUND	7,030	1,508	1,851	11	3,660								
	28000305	TEMPORARY DITCH CHECKS	FOOT	1,633	833	339		461								
	28000315	AGGREGATE DITCH CHECKS	TON	25	10	15										
	28000400	PERIMETER EROSION BARRIER	FOOT	37,636	10,384	8,695	1,536	17,021								
	28000500	INLET AND PIPE PROTECTION	EACH	35	11	18		6								
	28000510	INLET FILTERS	EACH	231	90	141										
	28001100	TEMPORARY EROSION CONTROL BLANKET	SQ YD	339,457	72,972	89,541	518	176,426								
	28100205	STONE RIPRAP, CLASS A3	TON	218	74	64	29	51								

* SPECIALTY ITEM
\# NON-PARTICIPATING ITEM (100% STATE)
#FR NON-PARTICIPATING ITEM (100% FOUR RIVERS SANITARY)
#CV NON-PARTICIPATING ITEM (100% VILLAGE OF CHERRY VALLEY)

MODEL: Default
FILE NAME: pw:\benesch-pw.bentley.com:benesch-pw-01\Documents\10800s\10800s\10800.00\Eng_Docs\CAD_Sheets\General\D2164R71-ODI-sht-SOQ-02.dgn

benesch
Alfred Benesch & Company
35 W. Wacker Drive, Suite 3300
Chicago, Illinois 60601
312-565-0150 Job No. 10800.00

USER NAME = JMaJcher	DESIGNED - A.GIBSON	REVISED -	
	DRAWN - N.REYNOLDS	REVISED -	
PLOT SCALE = 0.167 ' / In.	CHECKED - J.TARDY	REVISED -	
PLOT DATE = 12/6/2023	DATE - 10/13/2023	REVISED -	

STATE OF ILLINOIS
DEPARTMENT OF TRANSPORTATION

SUMMARY OF QUANTITIES

SCALE: N/A | SHEET 2 OF 29 SHEETS | STA. | TO STA.

F.A.* RTE.	SECTION	COUNTY	TOTAL SHEETS	SHEET NO.
*	(5)RS & (5&5HB)RC	WINNEBAGO	1279	8
		CONTRACT NO. 64R71		
	ILLINOIS FED. AID PROJECT			

* FAI ROUTE 39 (I-39) & FAP ROUTE 525 (US 20)

				US 20 (EAST OF I-39)	HARRISON AVE (WEST OF I-39)	MALL DR	I-39 AND DDI RAMPS	I-39	BIKE PATH	ROADWAY LIGHTING & TEMPORARY TRAFFIC SIGNALS	FIBER	ROADWAY SIGNING		TRAFFIC SIGNALS		
				ROADWAY	ROADWAY	ROADWAY	ROADWAY	ROADWAY	HARRISON AVE	I-39, HARRISON AVE, AND DDI RAMPS	I-39	I-39 AND DDI RAMPS	HARRISON AVE	DDI RAMPS	MALL DR	MALL DR
				0003	0003	0004	0003	0021	0021	0021	0043	0044	0044	0021	0021	0021
CODE NO.	ITEM DESCRIPTION	UNIT	TOTAL QUANTITY	80% FED 20% STATE	80% FED 20% STATE	80% FED 20% STATE	80% FED 20% STATE	100% TOLLWAY	80% FED 20% STATE	80% FED 20% STATE	100% STATE	80% FED 20% STATE	80% FED 20% STATE	80% FED 20% STATE	80% FED 20% VILLAGE	100% CVFPD
28100207	STONE RIPRAP, CLASS A4	TON	513	113	51	26	323									
28100209	STONE RIPRAP, CLASS A5	TON	1,282	456	676		150									
28200200	FILTER FABRIC	SQ YD	13,666	4,056	4,239	176	5,195									
30300001	AGGREGATE SUBGRADE IMPROVEMENT	CU YD	1,000	500	500											
30300112	AGGREGATE SUBGRADE IMPROVEMENT 12"	SQ YD	73,761	15,756	20,832	4,683	32,490									
30300118	AGGREGATE SUBGRADE IMPROVEMENT 18"	SQ YD	11,610	4,281	7,329											
30300121	AGGREGATE SUBGRADE IMPROVEMENT 21"	SQ YD	1,136		1,136											
30300124	AGGREGATE SUBGRADE IMPROVEMENT 24"	SQ YD	4,280	4,280												
30300130	AGGREGATE SUBGRADE IMPROVEMENT 30"	SQ YD	2,554		2,554											
30300136	AGGREGATE SUBGRADE IMPROVEMENT 36"	SQ YD	9,685	7,329	2,356											
31101400	SUBBASE GRANULAR MATERIAL, TYPE B 6"	SQ YD	10,982	5,855	5,127											
31200500	STABILIZED SUBBASE - HOT-MIX ASPHALT, 4"	SQ YD	87,541	29,131	31,389		27,021									
35100500	AGGREGATE BASE COURSE, TYPE A 6"	SQ YD	4,976		48		269		4,659							
35101500	AGGREGATE BASE COURSE, TYPE B	CU YD	23	23												

* SPECIALTY ITEM
\# NON-PARTICIPATING ITEM (100% STATE)
#FR NON-PARTICIPATING ITEM (100% FOUR RIVERS SANITARY)
#CV NON-PARTICIPATING ITEM (100% VILLAGE OF CHERRY VALLEY)

benesch
Alfred Benesch & Company
35 W. Wacker Drive, Suite 3300
Chicago, Illinois 60601
312-565-0150 Job No. 10800.00

USER NAME = JMaJcher	DESIGNED - A.GIBSON	REVISED -
	DRAWN - N.REYNOLDS	REVISED -
PLOT SCALE = 0.167 ' / In.	CHECKED - J.TARDY	REVISED -
PLOT DATE = 12/6/2023	DATE - 10/13/2023	REVISED -

STATE OF ILLINOIS
DEPARTMENT OF TRANSPORTATION

SUMMARY OF QUANTITIES

SCALE: N/A | SHEET 3 OF 29 SHEETS | STA. | TO STA.

F.A.* RTE.	SECTION	COUNTY	TOTAL SHEETS	SHEET NO.
*	(5)RS & (5&5HB)RC	WINNEBAGO	1279	9
		CONTRACT NO. 64R71		
	ILLINOIS FED. AID PROJECT			

* FAI ROUTE 39 (I-39) & FAP ROUTE 525 (US 20)

MODEL: Default
FILE NAME: pw:\benesch-pw.bentley.com:benesch-pw-01\Documents\10800\c10800.00\Eng_Docs\CAD_Sheets\General\D264R71-ODI-sht-SOQ-03.dgn

CODE NO.	ITEM DESCRIPTION	UNIT	TOTAL QUANTITY	US 20 (EAST OF I-39)	HARRISON AVE (WEST OF I-39)	MALL DR	I-39 AND DDI RAMPS	I-39	BIKE PATH	ROADWAY LIGHTING & TEMPORARY TRAFFIC SIGNALS	FIBER	ROADWAY SIGNING		TRAFFIC SIGNALS		
				ROADWAY	ROADWAY	ROADWAY	ROADWAY	ROADWAY	HARRISON AVE	I-39, HARRISON AVE, AND DDI RAMPS	I-39	I-39 AND DDI RAMPS	HARRISON AVE	DDI RAMPS	MALL DR	MALL DR
				0003	0003	0004	0003	0021	0021	0021	0043	0044	0044	0021	0021	0021
				80% FED 20% STATE	80% FED 20% STATE	80% FED 20% STATE	80% FED 20% STATE	100% TOLLWAY	80% FED 20% STATE	80% FED 20% STATE	100% STATE	80% FED 20% STATE	80% FED 20% STATE	80% FED 20% STATE	80% FED 20% VILLAGE	100% CVFPD
40600275	BITUMINOUS MATERIALS (PRIME COAT)	POUND	219,227	65,536	71,441	8,937	61,593	1,237	10,483							
40600290	BITUMINOUS MATERIALS (TACK COAT)	POUND	25,544	6,571	7,132	4,283	6,270	237	1,051							
40600370	LONGITUDINAL JOINT SEALANT	FOOT	2,214			2,214										
40600982	HOT-MIX ASPHALT SURFACE REMOVAL - BUTT JOINT	SQ YD	43		43											
40602970	HOT-MIX ASPHALT BINDER COURSE, IL-9.5FG, N70	TON	312	312												
40604060	HOT-MIX ASPHALT SURFACE COURSE, IL-9.5, MIX "D", N50	TON	1,076				31		1,045							
40604062	HOT-MIX ASPHALT SURFACE COURSE, IL-9.5, MIX "D", N70	TON	382	201	5	176										
40701951	HOT-MIX ASPHALT PAVEMENT (FULL-DEPTH), 13 1/2"	SQ YD	3,972			3,972										
42000506	PORTLAND CEMENT CONCRETE PAVEMENT 10 1/4" (JOINTED)	SQ YD	58,161	21,390	22,933		13,838									
42001300	PROTECTIVE COAT	SQ YD	101,474	32,836	31,859		36,366		413							
42100350	CONTINUOUSLY REINFORCED PORTLAND CEMENT CONCRETE PAVEMENT 12 1/2"	SQ YD	10,505				10,505									
42100615	PAVEMENT REINFORCEMENT	SQ YD	10,505				10,505									
42101436	LUG SYSTEM COMPLETE 36'	EACH	2				2									
42300300	PORTLAND CEMENT CONCRETE DRIVEWAY PAVEMENT, 7 INCH	SQ YD	48		48											

* SPECIALTY ITEM
\# NON-PARTICIPATING ITEM (100% STATE)
#FR NON-PARTICIPATING ITEM (100% FOUR RIVERS SANITARY)
#CV NON-PARTICIPATING ITEM (100% VILLAGE OF CHERRY VALLEY)

MODEL: Default
FILE NAME: pw://benesch-pw.bentley.com:benesch-pw-01/Documents/10800s/10800.00/Eng_Docs/CAD_Sheets/General/D264R71-DDI-sht-SOQ-04.dgn

benesch
Alfred Benesch & Company
35 W. Wacker Drive, Suite 3300
Chicago, Illinois 60601
312-565-0450 Job No. 10800.00

USER NAME = JMajcher	DESIGNED - A.GIBSON	REVISED -	
	DRAWN - N.REYNOLDS	REVISED -	
PLOT SCALE = 0.167 ' / in.	CHECKED - J.TARDY	REVISED -	
PLOT DATE = 12/6/2023	DATE - 10/13/2023	REVISED -	

STATE OF ILLINOIS
DEPARTMENT OF TRANSPORTATION

SUMMARY OF QUANTITIES

SCALE: N/A | SHEET 4 OF 29 SHEETS | STA. | TO STA.

F.A.* RTE.	SECTION	COUNTY	TOTAL SHEETS	SHEET NO.
*	(5)RS & (5&5HB)RC	WINNEBAGO	1279	10
		CONTRACT NO. 64R71		
		ILLINOIS	FED. AID PROJECT	

* FAI ROUTE 39 (I-39) & FAP ROUTE 525 (US 20)

				US 20 (EAST OF I-39)	HARRISON AVE (WEST OF I-39)	MALL DR	I-39 AND DDI RAMPS	I-39	BIKE PATH	ROADWAY LIGHTING & TEMPORARY TRAFFIC SIGNALS	FIBER	ROADWAY SIGNING		TRAFFIC SIGNALS		
				ROADWAY	ROADWAY	ROADWAY	ROADWAY	ROADWAY	HARRISON AVE	I-39, HARRISON AVE, AND DDI RAMPS	I-39	I-39 AND DDI RAMPS	HARRISON AVE	DDI RAMPS	MALL DR	MALL DR
				0003	0003	0004	0003	0021	0021	0021	0043	0044	0044	0021	0021	0021
CODE NO.	ITEM DESCRIPTION	UNIT	TOTAL QUANTITY	80% FED 20% STATE	80% FED 20% STATE	80% FED 20% STATE	80% FED 20% STATE	100% TOLLWAY	80% FED 20% STATE	80% FED 20% STATE	100% STATE	80% FED 20% STATE	80% FED 20% STATE	80% FED 20% STATE	80% FED 20% VILLAGE	100% CVFPD
42400200	PORTLAND CEMENT CONCRETE SIDEWALK 5 INCH	SQ FT	3,702						3,702							
* 42400800	DETECTABLE WARNINGS	SQ FT	200						200							
44000100	PAVEMENT REMOVAL	SQ YD	73,520	16,275	19,421	3,772	34,052									
44000157	HOT-MIX ASPHALT SURFACE REMOVAL, 2"	SQ YD	1,575			1,575										
44000159	HOT-MIX ASPHALT SURFACE REMOVAL, 2 1/2"	SQ YD	1,588	1,588												
44000160	HOT-MIX ASPHALT SURFACE REMOVAL, 2 3/4"	SQ YD	719	719												
44000169	HOT-MIX ASPHALT SURFACE REMOVAL, 5"	SQ YD	234	234												
44000200	DRIVEWAY PAVEMENT REMOVAL	SQ YD	61		61											
44000500	COMBINATION CURB AND GUTTER REMOVAL	FOOT	1,186	166	126	894										
44001980	CONCRETE BARRIER REMOVAL	FOOT	4,883	2,292	2,067		524									
44003100	MEDIAN REMOVAL	SQ FT	9,498		7,740	1,758										
44004000	PAVED DITCH REMOVAL	FOOT	277	277												
44004250	PAVED SHOULDER REMOVAL	SQ YD	48,621	10,361	9,692		28,271	297								
48100500	AGGREGATE SHOULDERS, TYPE A 6"	SQ YD	2,608				2,608									

*= SPECIALTY ITEM

* SPECIALTY ITEM
\# NON-PARTICIPATING ITEM (100% STATE)
#FR NON-PARTICIPATING ITEM (100% FOUR RIVERS SANITARY)
#CV NON-PARTICIPATING ITEM (100% VILLAGE OF CHERRY VALLEY)

MODEL: Default
FILE NAME: pw://benesch-pw.bentley.com:benesch-pw-01/Documents/10800s/10800.00/Eng_Docs/CAD_Sheets/General/D264R71-DDI-sht-SOQ-05.dgn

benesch
Alfred Benesch & Company
35 W. Wacker Drive, Suite 3300
Chicago, Illinois 60601
312-565-0450 Job No. 10800.00

USER NAME = JMajcher	DESIGNED - A.GIBSON	REVISED -	
	DRAWN - N.REYNOLDS	REVISED -	
PLOT SCALE = 0.167 ' / in.	CHECKED - J.TARDY	REVISED -	
PLOT DATE = 12/6/2023	DATE - 10/13/2023	REVISED -	

STATE OF ILLINOIS
DEPARTMENT OF TRANSPORTATION

SUMMARY OF QUANTITIES

SCALE: N/A | SHEET 5 OF 29 SHEETS | STA. | TO STA.

F.A.* RTE.	SECTION	COUNTY	TOTAL SHEETS	SHEET NO.
*	(5)RS & (5&5HB)RC	WINNEBAGO	1279	11
		CONTRACT NO. 64R71		
		ILLINOIS	FED. AID PROJECT	

* FAI ROUTE 39 (I-39) & FAP ROUTE 525 (US 20)

REV. 12/11/23

				US 20 (EAST OF I-39)	HARRISON AVE (WEST OF I-39)	MALL DR	I-39 AND DDI RAMPS	I-39	BIKE PATH	ROADWAY LIGHTING & TEMPORARY TRAFFIC SIGNALS	FIBER	ROADWAY SIGNING		TRAFFIC SIGNALS		
				ROADWAY	ROADWAY	ROADWAY	ROADWAY	ROADWAY	HARRISON AVE	I-39, HARRISON AVE, AND DDI RAMPS	I-39	I-39 AND DDI RAMPS	HARRISON AVE	DDI RAMPS	MALL DR	MALL DR
				0003	0003	0004	0003	0021	0021	0021	0043	0044	0044	0021	0021	0021
CODE NO.	ITEM DESCRIPTION	UNIT	TOTAL QUANTITY	80% FED 20% STATE	80% FED 20% STATE	80% FED 20% STATE	80% FED 20% STATE	100% TOLLWAY	80% FED 20% STATE	80% FED 20% STATE	100% STATE	80% FED 20% STATE	80% FED 20% STATE	80% FED 20% STATE	80% FED 20% VILLAGE	100% CVFPD
48101498	AGGREGATE SHOULDERS, TYPE B 4"	SQ YD	152					152								
48203021	HOT-MIX ASPHALT SHOULDERS, 6"	SQ YD	909				384	525								
48203029	HOT-MIX ASPHALT SHOULDERS, 8"	SQ YD	99		99											
48300505	PORTLAND CEMENT CONCRETE SHOULDERS 10 1/4"	SQ YD	4,920				4,920									
48300710	PORTLAND CEMENT CONCRETE SHOULDERS 12 1/2"	SQ YD	6,386				6,386									
50104400	CONCRETE HEADWALL REMOVAL	EACH	43	8	12	3	20									
50105220	PIPE CULVERT REMOVAL	FOOT	970		51	16	903									
50800205	REINFORCEMENT BARS, EPOXY COATED	POUND	331	139	139	53										
52200020	TEMPORARY SOIL RETENTION SYSTEM	SQ FT	2,596	545	2,051											
54001001	BOX CULVERT END SECTIONS, CULVERT NO. 1	EACH	4		4											
54001002	BOX CULVERT END SECTIONS, CULVERT NO. 2	EACH	1	1												
54002020	EXPANSION BOLTS 3/4 INCH	EACH	40	16	16	8										
54010404	PRECAST CONCRETE BOX CULVERTS 4' X 4'	FOOT	221		221											
54010604	PRECAST CONCRETE BOX CULVERTS 6' X 4'	FOOT	296	296												

* SPECIALTY ITEM
\# NON-PARTICIPATING ITEM (100% STATE)
#FR NON-PARTICIPATING ITEM (100% FOUR RIVERS SANITARY)
#CV NON-PARTICIPATING ITEM (100% VILLAGE OF CHERRY VALLEY)

MODEL: Default
FILE NAME: pw:\benesch-pw.bentley.com:benesch-pw-01\Documents\10800s\10800\00\Eng. Docs\CAD Sheets\General\D2164721-ODI-sht-SOQ-06.dgn

benesch
Alfred Benesch & Company
35 W. Wacker Drive, Suite 3300
Chicago, Illinois 60601
312-565-0150 Job No. 10800.00

USER NAME = JMaJcher	DESIGNED - A.GIBSON	REVISED -
	DRAWN - N.REYNOLDS	REVISED -
PLOT SCALE = 0.167 ' / In.	CHECKED - J.TARDY	REVISED -
PLOT DATE = 12/6/2023	DATE - 10/13/2023	REVISED -

STATE OF ILLINOIS
DEPARTMENT OF TRANSPORTATION

SUMMARY OF QUANTITIES

SCALE: N/A | SHEET 6 OF 29 SHEETS | STA. | TO STA.

F.A.* RTE.	SECTION	COUNTY	TOTAL SHEETS	SHEET NO.
*	(5)RS & (5&5HB)RC	WINNEBAGO	1279	12
		CONTRACT NO. 64R71		
	ILLINOIS	FED. AID PROJECT		

* FAI ROUTE 39 (I-39) & FAP ROUTE 525 (US 20)

				US 20 (EAST OF I-39)	HARRISON AVE (WEST OF I-39)	MALL DR	I-39 AND DDI RAMPS	I-39	BIKE PATH	ROADWAY LIGHTING & TEMPORARY TRAFFIC SIGNALS	FIBER	ROADWAY SIGNING		TRAFFIC SIGNALS		
				ROADWAY	ROADWAY	ROADWAY	ROADWAY	ROADWAY	HARRISON AVE	I-39, HARRISON AVE, AND DDI RAMPS	I-39	I-39 AND DDI RAMPS	HARRISON AVE	DDI RAMPS	MALL DR	MALL DR
				0003	0003	0004	0003	0021	0021	0021	0043	0044	0044	0021	0021	0021
CODE NO.	ITEM DESCRIPTION	UNIT	TOTAL QUANTITY	80% FED 20% STATE	80% FED 20% STATE	80% FED 20% STATE	80% FED 20% STATE	100% TOLLWAY	80% FED 20% STATE	80% FED 20% STATE	100% STATE	80% FED 20% STATE	80% FED 20% STATE	80% FED 20% STATE	80% FED 20% VILLAGE	100% CVFPD
542A1063	PIPE CULVERTS, CLASS A, TYPE 2 18"	FOOT	96	27			69									
542A1069	PIPE CULVERTS, CLASS A, TYPE 2 24"	FOOT	133	39			94									
542A1081	PIPE CULVERTS, CLASS A, TYPE 2 36"	FOOT	32				32									
542A1933	PIPE CULVERTS, CLASS A, TYPE 3 48"	FOOT	153				153									
54213660	PRECAST REINFORCED CONCRETE FLARED END SECTIONS 15"	EACH	2			2										
54213663	PRECAST REINFORCED CONCRETE FLARED END SECTIONS 18"	EACH	7	2	2	1	2									
54213669	PRECAST REINFORCED CONCRETE FLARED END SECTIONS 24"	EACH	24	11	7		6									
54213675	PRECAST REINFORCED CONCRETE FLARED END SECTIONS 30"	EACH	3		1		2									
54213681	PRECAST REINFORCED CONCRETE FLARED END SECTIONS 36"	EACH	14	3	3		8									
54213693	PRECAST REINFORCED CONCRETE FLARED END SECTIONS 48"	EACH	3		1		2									
5424A012	PIPE CULVERTS, CLASS A, TYPE 4 12" (TEMPORARY)	FOOT	489	87	402											
5424A024	PIPE CULVERTS, CLASS A, TYPE 4 24" (TEMPORARY)	FOOT	914	321	593											
54248510	CONCRETE COLLAR	CU YD	5.4	2.2	2.2	1.0										
54260315	TRAVERSABLE PIPE GRATE FOR CONCRETE END SECTION	FOOT	13		13											

* SPECIALTY ITEM
\# NON-PARTICIPATING ITEM (100% STATE)
#FR NON-PARTICIPATING ITEM (100% FOUR RIVERS SANITARY)
#CV NON-PARTICIPATING ITEM (100% VILLAGE OF CHERRY VALLEY)

MODEL: Default
FILE NAME: pw:\benesch-pw.bentley.com:benesch-pw-01\Documents\10800s\10800\00\Eng Docs\CAD Sheets\General\D264R71-ODI-sht-SOQ-07.dgn

benesch
Alfred Benesch & Company
35 W. Wacker Drive, Suite 3300
Chicago, Illinois 60601
312-565-0150 Job No. 10800.00

USER NAME = JMaJcher	DESIGNED - A.GIBSON	REVISED -	
	DRAWN - N.REYNOLDS	REVISED -	
PLOT SCALE = 0.167 ' / In.	CHECKED - J.TARDY	REVISED -	
PLOT DATE = 12/6/2023	DATE - 10/13/2023	REVISED -	

STATE OF ILLINOIS
DEPARTMENT OF TRANSPORTATION

SUMMARY OF QUANTITIES

SCALE: N/A | SHEET 7 OF 29 SHEETS | STA. | TO STA.

F.A.* RTE.	SECTION	COUNTY	TOTAL SHEETS	SHEET NO.
*	(5)RS & (5&5HB)RC	WINNEBAGO	1279	13
		CONTRACT NO. 64R71		
	ILLINOIS	FED. AID PROJECT		

* FAI ROUTE 39 (I-39) & FAP ROUTE 525 (US 20)

				US 20 (EAST OF I-39)	HARRISON AVE (WEST OF I-39)	MALL DR	I-39 AND DDI RAMPS	I-39	BIKE PATH	ROADWAY LIGHTING & TEMPORARY TRAFFIC SIGNALS	FIBER	ROADWAY SIGNING		TRAFFIC SIGNALS		
				ROADWAY	ROADWAY	ROADWAY	ROADWAY	ROADWAY	HARRISON AVE	I-39, HARRISON AVE, AND DDI RAMPS	I-39	I-39 AND DDI RAMPS	HARRISON AVE	DDI RAMPS	MALL DR	MALL DR
				0003	0003	0004	0003	0021	0021	0021	0043	0044	0044	0021	0021	0021
CODE NO.	ITEM DESCRIPTION	UNIT	TOTAL QUANTITY	80% FED 20% STATE	80% FED 20% STATE	80% FED 20% STATE	80% FED 20% STATE	100% TOLLWAY	80% FED 20% STATE	80% FED 20% STATE	100% STATE	80% FED 20% STATE	80% FED 20% STATE	80% FED 20% STATE	80% FED 20% VILLAGE	100% CVFPD
54261336	CONCRETE END SECTION, STANDARD 542001, 36", 1:3	EACH	1		1											
550A0160	STORM SEWERS, CLASS A, TYPE 1 36"	FOOT	9				9									
550A0360	STORM SEWERS, CLASS A, TYPE 2 15"	FOOT	509		453	56										
550A0380	STORM SEWERS, CLASS A, TYPE 2 18"	FOOT	4,660	2,127	2,517	16										
550A0410	STORM SEWERS, CLASS A, TYPE 2 24"	FOOT	3,825	1,692	1,461	111	561									
550A0430	STORM SEWERS, CLASS A, TYPE 2 30"	FOOT	1,238		488		750									
550A0450	STORM SEWERS, CLASS A, TYPE 2 36"	FOOT	656	135	187		334									
550A0710	STORM SEWERS, CLASS A, TYPE 3 24"	FOOT	335	36	130		169									
550A0750	STORM SEWERS, CLASS A, TYPE 3 36"	FOOT	636	61	443		132									
550A0780	STORM SEWERS, CLASS A, TYPE 3 48"	FOOT	79		79											
550A1050	STORM SEWERS, CLASS A, TYPE 4 36"	FOOT	66		66											
55100500	STORM SEWER REMOVAL 12"	FOOT	1,601	504	1,080	17										
55100700	STORM SEWER REMOVAL 15"	FOOT	501		267	60	174									
55100900	STORM SEWER REMOVAL 18"	FOOT	82		66	16										

* SPECIALTY ITEM
\# NON-PARTICIPATING ITEM (100% STATE)
#FR NON-PARTICIPATING ITEM (100% FOUR RIVERS SANITARY)
#CV NON-PARTICIPATING ITEM (100% VILLAGE OF CHERRY VALLEY)

MODEL: Default
FILE NAME: pw:\benesch-pw.bentley.com:benesch-pw-01\Documents\10800s\10800\00\Eng Docs\CAD Sheets\General\D264R71-ODI-sht-SOQ-08.dgn

benesch
Alfred Benesch & Company
35 W. Wacker Drive, Suite 3300
Chicago, Illinois 60601
312-565-0150 Job No. 10800.00

USER NAME = JMaJcher	DESIGNED - A.GIBSON	REVISED -	
	DRAWN - N.REYNOLDS	REVISED -	
PLOT SCALE = 0.167 ' / in.	CHECKED - J.TARDY	REVISED -	
PLOT DATE = 12/6/2023	DATE - 10/13/2023	REVISED -	

STATE OF ILLINOIS
DEPARTMENT OF TRANSPORTATION

SUMMARY OF QUANTITIES

SCALE: N/A | SHEET 8 OF 29 SHEETS | STA. | TO STA.

F.A.* RTE.	SECTION	COUNTY	TOTAL SHEETS	SHEET NO.
*	(5)RS & (5&5HB)RC	WINNEBAGO	1279	14
		CONTRACT NO. 64R71		
	ILLINOIS	FED. AID PROJECT		

* FAI ROUTE 39 (I-39) & FAP ROUTE 525 (US 20)

				US 20 (EAST OF I-39)	HARRISON AVE (WEST OF I-39)	MALL DR	I-39 AND DDI RAMPS	I-39	BIKE PATH	ROADWAY LIGHTING & TEMPORARY TRAFFIC SIGNALS	FIBER	ROADWAY SIGNING		TRAFFIC SIGNALS		
				ROADWAY	ROADWAY	ROADWAY	ROADWAY	ROADWAY	HARRISON AVE	I-39, HARRISON AVE, AND DDI RAMPS	I-39	I-39 AND DDI RAMPS	HARRISON AVE	DDI RAMPS	MALL DR	MALL DR
	CODE NO.	ITEM DESCRIPTION	UNIT	TOTAL QUANTITY	0003	0003	0004	0003	0021	0021	0043	0044	0044	0021	0021	0021
					80% FED 20% STATE	80% FED 20% STATE	80% FED 20% STATE	80% FED 20% STATE	100% TOLLWAY	80% FED 20% STATE	100% STATE	80% FED 20% STATE	80% FED 20% STATE	80% FED 20% STATE	80% FED 20% VILLAGE	100% CVFPD
	55101000	STORM SEWER REMOVAL 20"	FOOT	173	117	6		50								
	55101200	STORM SEWER REMOVAL 24"	FOOT	777	609	168										
	55101400	STORM SEWER REMOVAL 30"	FOOT	179		179										
#CV	56109210	WATER VALVES TO BE ADJUSTED	EACH	1			1									
	59300100	CONTROLLED LOW-STRENGTH MATERIAL	CU YD	12.4	7.0	5.4										
	60100060	CONCRETE HEADWALLS FOR PIPE DRAINS	EACH	25	3	3		19								
	60108200	PIPE UNDERDRAINS 6" (SPECIAL)	FOOT	645	20	63		562								
	60108204	PIPE UNDERDRAINS, TYPE 2, 4"	FOOT	374	234			140								
	60108206	PIPE UNDERDRAINS, TYPE 2, 6"	FOOT	17,679	5,155	5,329		7,195								
	60219540	MANHOLES, TYPE A, 4'-DIAMETER, TYPE 24 FRAME AND GRATE	EACH	71	37	31	3									
	60222240	MANHOLES, TYPE A, 5'-DIAMETER, TYPE 24 FRAME AND GRATE	EACH	29	8	20	1									
	60224039	MANHOLES, TYPE A, 6'-DIAMETER, TYPE 24 FRAME AND GRATE	EACH	1		1										
	60224449	MANHOLES, TYPE A, 7'-DIAMETER, TYPE 24 FRAME AND GRATE	EACH	2		2										
	60224456	MANHOLES, TYPE A, 8'-DIAMETER, TYPE 24 FRAME AND GRATE	EACH	1		1										

* SPECIALTY ITEM
\# NON-PARTICIPATING ITEM (100% STATE)
#FR NON-PARTICIPATING ITEM (100% FOUR RIVERS SANITARY)
#CV NON-PARTICIPATING ITEM (100% VILLAGE OF CHERRY VALLEY)

MODEL: Default
FILE NAME: pw:\benesch-pw.bentley.com:benesch-pw-01\Documents\10800s\10800s\10800.00\Eng. Docs\CAD Sheets\General\D264R71-ODI-sht-SOQ-09.dgn

benesch
Alfred Benesch & Company
35 W. Wacker Drive, Suite 3300
Chicago, Illinois 60601
312-565-0150 Job No. 10800.00

USER NAME = JMaJcher	DESIGNED - A.GIBSON	REVISED -
	DRAWN - N.REYNOLDS	REVISED -
PLOT SCALE = 0.167 ' / In.	CHECKED - J.TARDY	REVISED -
PLOT DATE = 12/6/2023	DATE - 10/13/2023	REVISED -

STATE OF ILLINOIS
DEPARTMENT OF TRANSPORTATION

SUMMARY OF QUANTITIES

SCALE: N/A | SHEET 9 OF 29 SHEETS | STA. | TO STA.

F.A.* RTE.	SECTION	COUNTY	TOTAL SHEETS	SHEET NO.
*	(5)RS & (5&5HB)RC	WINNEBAGO	1279	15
		CONTRACT NO. 64R71		
	ILLINOIS	FED. AID PROJECT		

* FAI ROUTE 39 (I-39) & FAP ROUTE 525 (US 20)

REV. 12/11/23

				US 20 (EAST OF I-39)	HARRISON AVE (WEST OF I-39)	MALL DR	I-39 AND DDI RAMPS	I-39	BIKE PATH	ROADWAY LIGHTING & TEMPORARY TRAFFIC SIGNALS	FIBER	ROADWAY SIGNING		TRAFFIC SIGNALS		
				ROADWAY	ROADWAY	ROADWAY	ROADWAY	ROADWAY	HARRISON AVE	I-39, HARRISON AVE, AND DDI RAMPS	I-39	I-39 AND DDI RAMPS	HARRISON AVE	DDI RAMPS	MALL DR	MALL DR
				0003	0003	0004	0003	0021	0021	0021	0043	0044	0044	0021	0021	0021
CODE NO.	ITEM DESCRIPTION	UNIT	TOTAL QUANTITY	80% FED 20% STATE	80% FED 20% STATE	80% FED 20% STATE	80% FED 20% STATE	100% TOLLWAY	80% FED 20% STATE	80% FED 20% STATE	100% STATE	80% FED 20% STATE	80% FED 20% STATE	80% FED 20% STATE	80% FED 20% VILLAGE	100% CVFPD
60500040	REMOVING MANHOLES	EACH	6		2	2	2									
60500050	REMOVING CATCH BASINS	EACH	13	7	3	3										
60500060	REMOVING INLETS	EACH	32	12	16	2	2									
60600095	CLASS SI CONCRETE (OUTLET)	CU YD	14.7	4.3	10.4											
60603500	COMBINATION CONCRETE CURB AND GUTTER, TYPE B-6.06	FOOT	1,812	381	1,431											
60605000	COMBINATION CONCRETE CURB AND GUTTER, TYPE B-6.24	FOOT	22,124	10,436	10,623	1,065										
60608600	COMBINATION CONCRETE CURB AND GUTTER, TYPE M-6.06	FOOT	128			128										
60610400	COMBINATION CONCRETE CURB AND GUTTER, TYPE M-6.24	FOOT	141			141										
60618300	CONCRETE MEDIAN SURFACE, 4 INCH	SQ FT	89,124	44,675	43,591	858										
60619910	CONCRETE MEDIAN, TYPE SB-6.18	SQ FT	1,624			1,624										
60620000	CONCRETE MEDIAN, TYPE SB-6.24	SQ FT	81		81											
* 63000001	STEEL PLATE BEAM GUARDRAIL, TYPE A, 6 FOOT POSTS	FOOT	100	100												
* 63100045	TRAFFIC BARRIER TERMINAL, TYPE 2	EACH	1	1												
* 63100167	TRAFFIC BARRIER TERMINAL, TYPE 1 (SPECIAL) TANGENT	EACH	1	1												

* SPECIALTY ITEM
\# NON-PARTICIPATING ITEM (100% STATE)
#FR NON-PARTICIPATING ITEM (100% FOUR RIVERS SANITARY)
#CV NON-PARTICIPATING ITEM (100% VILLAGE OF CHERRY VALLEY)

benesch
Alfred Benesch & Company
35 W. Wacker Drive, Suite 3300
Chicago, Illinois 60601
312-565-0150 Job No. 10800.00

USER NAME = JMaJcher	DESIGNED - A.GIBSON	REVISED -
	DRAWN - N.REYNOLDS	REVISED -
PLOT SCALE = 0.167 ' / In.	CHECKED - J.TARDY	REVISED -
PLOT DATE = 12/6/2023	DATE - 10/13/2023	REVISED -

STATE OF ILLINOIS
DEPARTMENT OF TRANSPORTATION

SUMMARY OF QUANTITIES

SCALE: N/A | SHEET 10 OF 29 SHEETS | STA. | TO STA.

F.A.* RTE.	SECTION	COUNTY	TOTAL SHEETS	SHEET NO.
*	(5)RS & (5&5HB)RC	WINNEBAGO	1279	16
		CONTRACT NO. 64R71		
	ILLINOIS	FED. AID PROJECT		

* FAI ROUTE 39 (I-39) & FAP ROUTE 525 (US 20)

MODEL: Default
FILE NAME: pw:\benesch-pw.bentley.com:benesch-pw-01\Documents\10800s\10800.00\Eng. Docs\CAD Sheets\General\D2164R71-ODI-sht-SOQ-10.dgn

				US 20 (EAST OF I-39)	HARRISON AVE (WEST OF I-39)	MALL DR	I-39 AND DDI RAMPS	I-39	BIKE PATH	ROADWAY LIGHTING & TEMPORARY TRAFFIC SIGNALS	FIBER	ROADWAY SIGNING		TRAFFIC SIGNALS		
				ROADWAY	ROADWAY	ROADWAY	ROADWAY	ROADWAY	HARRISON AVE	I-39, HARRISON AVE, AND DDI RAMPS	I-39	I-39 AND DDI RAMPS	HARRISON AVE	DDI RAMPS	MALL DR	MALL DR
				0003	0003	0004	0003	0021	0021	0021	0043	0044	0044	0021	0021	0021
CODE NO.	ITEM DESCRIPTION	UNIT	TOTAL QUANTITY	80% FED 20% STATE	80% FED 20% STATE	80% FED 20% STATE	80% FED 20% STATE	100% TOLLWAY	80% FED 20% STATE	80% FED 20% STATE	100% STATE	80% FED 20% STATE	80% FED 20% STATE	80% FED 20% STATE	80% FED 20% VILLAGE	100% CVFPD
63200310	GUARDRAIL REMOVAL	FOOT	1,120	715	405											
63500105	DELINEATORS	EACH	158	15	13	4	126									
63700280	CONCRETE BARRIER, DOUBLE FACE, 44 INCH HEIGHT	FOOT	448				448									
63700380	CONCRETE BARRIER, VARIABLE CROSS SECTION 44 INCH HEIGHT	FOOT	200				200									
63700900	CONCRETE BARRIER BASE	FOOT	648				648									
64200116	SHOULDER RUMBLE STRIPS, 16 INCH	FOOT	6,549				6,549									
64300900	IMPACT ATTENUATORS (SEVERE USE, WIDE), TEST LEVEL 2	EACH	4	2	2											
* 66400305	CHAIN LINK FENCE, 6'	FOOT	2,678	504			2,174									
* 66600105	FURNISHING AND ERECTING RIGHT OF WAY MARKERS	EACH	3	3												
* 66700305	PERMANENT SURVEY MARKERS, TYPE II	EACH	1	1												
*a 66900200	NON-SPECIAL WASTE DISPOSAL	CU YD	1,000		1,000											
* 66900400	SPECIAL WASTE GROUNDWATER DISPOSAL	GALLON	5,000		5,000											
*b 66900530	SOIL DISPOSAL ANALYSIS	EACH	4		4											
*b 66900575	VOCS GROUNDWATER ANALYSIS	EACH	4		4											

a. BASED ON DISCUSSIONS WITH DISTRICT PERSONNEL, DISTRICT 2 AGREES THAT MOST OF THE MATERIAL CLASSIFIED AS 669.05(a)(1), 669.05(a)(2), 669.05(a)(3), 669.05(b)(1) AND 669.05(c) DOES NOT CONSTITUE A SERIOUS ENVIRONMENTAL CONCERN AND THE MATERIAL SHALL BE REUSED ON SITE AS EMBANKMENT OR FILL IN ACCORDANCE WITH THE SPECIAL PROVISIONS. THE DISTRICT HAS COMMITTED TO PLACING APPROXIMATELY 110,202 CUBIC YARDS OF REGULATED SUBSTANCES MATERIAL CLASSIFIED AS 669.05(a)(1), 669.05(a)(2), 669.05(a)(3), 669.05(b)(1) AND 669.05(c) ALONG THE INTERSTATE AS FILL OR EMBANKMENT WITHIN THE PROJECT LIMITS. IF PLANS FOR THIS PROJECT CHANGE AND MATERIAL CLASSIFIED AS 669.05(a)(1), 669.05(a)(2), 669.05(a)(3) 669.05(b)(1) AND 669.05(c) IS TO BE REMOVED, THE REGULATED SUBSTANCES MATERIAL REFERENCED IN THE SPECIAL PROVISIONS WILL NEED TO BE MANAGED USING ARTICAL 109.04 AS NON-SPECIAL WASTE. THE INTENT OF THE COMMITMENT IS NOT COVERED BY SECTION 202.

b. WATER SAMPLES ARE INTENDED TO BE TAKEN INTERMITTENTLY DURING DISCHARGE OF EXCESS WATER IN AREAS CLASSIFIED AS 669.05(d) TO VERIFY FILTERED EFFLUENT DOES NOT EXCEED NPDES PERMIT DISCHARGES. SAMPLES ARE ONLY TO BE COLLECTED IF PUMPING THROUGH NPDES OUTFALLS IS NECESSARY. SAMPLE RESULTS ARE TO BE SUBMITTED TO THE DISTRCIT ENVIRONMENTAL STUDIES UNIT.

* SPECIALTY ITEM
\# NON-PARTICIPATING ITEM (100% STATE)
#FR NON-PARTICIPATING ITEM (100% FOUR RIVERS SANITARY)
#CV NON-PARTICIPATING ITEM (100% VILLAGE OF CHERRY VALLEY)

benesch
Alfred Benesch & Company
35 W. Wacker Drive, Suite 3300
Chicago, Illinois 60601
312-565-0150 Job No. 10800.00

USER NAME = JMaJcher	DESIGNED - A.GIBSON	REVISED -	
	DRAWN - N.REYNOLDS	REVISED -	
PLOT SCALE = 0.167 ' / In.	CHECKED - J.TARDY	REVISED -	
PLOT DATE = 12/6/2023	DATE - 10/13/2023	REVISED -	

STATE OF ILLINOIS
DEPARTMENT OF TRANSPORTATION

SUMMARY OF QUANTITIES

SCALE: N/A | SHEET 11 OF 29 SHEETS | STA. | TO STA.

F.A.* RTE.	SECTION	COUNTY	TOTAL SHEETS	SHEET NO.
*	(5)RS & (5&5HB)RC	WINNEBAGO	1279	17
		CONTRACT NO. 64R71		
	ILLINOIS FED. AID PROJECT			

* FAI ROUTE 39 (I-39) & FAP ROUTE 525 (US 20)

REV. 12/11/23

MODEL: Default
FILE NAME: pw:\benesch-pw.bentley.com:benesch-pw-01\Documents\10800s\10800.00\Eng Docs\CAD Sheets\General\D264R71-ODI-sht-SOQ-11.dgn

					US 20 (EAST OF I-39)	HARRISON AVE (WEST OF I-39)	MALL DR	I-39 AND DDI RAMPS	I-39	BIKE PATH	ROADWAY LIGHTING & TEMPORARY TRAFFIC SIGNALS	FIBER	ROADWAY SIGNING		TRAFFIC SIGNALS		
					ROADWAY	ROADWAY	ROADWAY	ROADWAY	ROADWAY	HARRISON AVE	I-39, HARRISON AVE, AND DDI RAMPS	I-39	I-39 AND DDI RAMPS	HARRISON AVE	DDI RAMPS	MALL DR	MALL DR
	CODE NO.	ITEM DESCRIPTION	UNIT	TOTAL QUANTITY	0003	0003	0004	0003	0021	0021	0021	0043	0044	0044	0021	0021	0021
					80% FED 20% STATE	80% FED 20% STATE	80% FED 20% STATE	80% FED 20% STATE	100% TOLLWAY	80% FED 20% STATE	80% FED 20% STATE	100% STATE	80% FED 20% STATE	80% FED 20% STATE	80% FED 20% STATE	80% FED 20% VILLAGE	100% CVFPD
*b	66900580	SVOCS GROUNDWATER ANALYSIS	EACH	4		4											
*b	66900605	RCRA METALS GROUNDWATER ANALYSIS	EACH	4		4											
*	66901001	REGULATED SUBSTANCES PRE-CONSTRUCTION PLAN	L SUM	1		1											
*	66901003	REGULATED SUBSTANCES FINAL CONSTRUCTION REPORT	L SUM	1		1											
*	66901006	REGULATED SUBSTANCES MONITORING	CAL DA	221		221											
	67100100	MOBILIZATION	L SUM	1	1												
	70100315	TRAFFIC CONTROL AND PROTECTION, STANDARD 701422	EACH	19	9	10											
	70100410	TRAFFIC CONTROL AND PROTECTION, STANDARD 701416	EACH	2	2												
	70100420	TRAFFIC CONTROL AND PROTECTION, STANDARD 701411	EACH	14	6	6		2									
	70100800	TRAFFIC CONTROL AND PROTECTION, STANDARD 701401	L SUM	1				1									
	70100820	TRAFFIC CONTROL AND PROTECTION, STANDARD 701451	L SUM	1				1									
	70100825	TRAFFIC CONTROL AND PROTECTION, STANDARD 701456	L SUM	1				1									
	70102620	TRAFFIC CONTROL AND PROTECTION, STANDARD 701501	L SUM	1			1										
	70102631	TRAFFIC CONTROL AND PROTECTION, STANDARD 701601	EACH	1			1										

a. BASED ON DISCUSSIONS WITH DISTRICT PERSONNEL, DISTRICT 2 AGREES THAT MOST OF THE MATERIAL CLASSIFIED AS 669.05(a)(1), 669.05(a)(2), 669.05(a)(3), 669.05(b)(1) AND 669.05(c) DOES NOT CONSTITUE A SERIOUS ENVIRONMENTAL CONCERN AND THE MATERIAL SHALL BE REUSED ON SITE AS EMBANKMENT OR FILL IN ACCORDANCE WITH THE SPECIAL PROVISIONS. THE DISTRICT HAS COMMITTED TO PLACING APPROXIMATELY 110,202 CUBIC YARDS OF REGULATED SUBSTANCES MATERIAL CLASSIFIED AS 669.05(a)(1), 669.05(a)(2), 669.05(a)(3), 669.05(b)(1) AND 669.05(c) ALONG THE INTERSTATE AS FILL OR EMBANKMENT WITHIN THE PROJECT LIMITS. IF PLANS FOR THIS PROJECT CHANGE AND MATERIAL CLASSIFIED AS 669.05(a)(1), 669.05(a)(2), 669.05(a)(3) 669.05(b)(1) AND 669.05(c) IS TO BE REMOVED, THE REGULATED SUBSTANCES MATERIAL REFERENCED IN THE SPECIAL PROVISIONS WILL NEED TO BE MANAGED USING ARTICAL 109.04 AS NON-SPECIAL WASTE. THE INTENT OF THE COMMITMENT IS NOT COVERED BY SECTION 202.

b. WATER SAMPLES ARE INTENDED TO BE TAKEN INTERMITTENTLY DURING DISCHARGE OF EXCESS WATER IN AREAS CLASSIFIED AS 669.05(d) TO VERIFY FILTERED EFFLUENT DOES NOT EXCEED NPDES PERMIT DISCHARGES. SAMPLES ARE ONLY TO BE COLLECTED IF PUMPING THROUGH NPDES OUTFALLS IS NECESSARY. SAMPLE RESULTS ARE TO BE SUBMITTED TO THE DISTRCIT ENVIRONMENTAL STUDIES UNIT.

* SPECIALTY ITEM
\# NON-PARTICIPATING ITEM (100% STATE)
#FR NON-PARTICIPATING ITEM (100% FOUR RIVERS SANITARY)
#CV NON-PARTICIPATING ITEM (100% VILLAGE OF CHERRY VALLEY)

MODEL: Default
FILE NAME: pw:\benesch-pw.bentley.com:benesch-pw-01\Documents\10800s\10800s\10800.00\Eng. Docs\CAD_Sheets\General\D2R64R71-ODI-sht-SOQ-12.dgn

benesch
Alfred Benesch & Company
35 W. Wacker Drive, Suite 3300
Chicago, Illinois 60601
312-565-0150 Job No. 10800.00

USER NAME = JMaJcher	DESIGNED - A.GIBSON	REVISED -	
	DRAWN - N.REYNOLDS	REVISED -	
PLOT SCALE = 0.167 ' / in.	CHECKED - J.TARDY	REVISED -	
PLOT DATE = 12/6/2023	DATE - 10/13/2023	REVISED -	

STATE OF ILLINOIS
DEPARTMENT OF TRANSPORTATION

SUMMARY OF QUANTITIES

SCALE: N/A | SHEET 12 OF 29 SHEETS | STA. | TO STA.

F.A.* RTE.	SECTION	COUNTY	TOTAL SHEETS	SHEET NO.
*	(5)RS & (5&5HB)RC	WINNEBAGO	1279	18
		CONTRACT NO. 64R71		
	ILLINOIS	FED. AID PROJECT		

* FAI ROUTE 39 (I-39) & FAP ROUTE 525 (US 20)

CODE NO.	ITEM DESCRIPTION	UNIT	TOTAL QUANTITY	US 20 (EAST OF I-39)	HARRISON AVE (WEST OF I-39)	MALL DR	I-39 AND DDI RAMPS	I-39	BIKE PATH	ROADWAY LIGHTING & TEMPORARY TRAFFIC SIGNALS	FIBER	ROADWAY SIGNING		TRAFFIC SIGNALS		
				ROADWAY	ROADWAY	ROADWAY	ROADWAY	ROADWAY	HARRISON AVE	I-39, HARRISON AVE, AND DDI RAMPS	I-39	I-39 AND DDI RAMPS	HARRISON AVE	DDI RAMPS	MALL DR	MALL DR
				0003	0003	0004	0003	0021	0021	0021	0043	0044	0044	0021	0021	0021
				80% FED 20% STATE	80% FED 20% STATE	80% FED 20% STATE	80% FED 20% STATE	100% TOLLWAY	80% FED 20% STATE	80% FED 20% STATE	100% STATE	80% FED 20% STATE	80% FED 20% STATE	80% FED 20% STATE	80% FED 20% VILLAGE	100% CVFPD
70102635	TRAFFIC CONTROL AND PROTECTION, STANDARD 701701	L SUM	1	0.5	0.5											
70102640	TRAFFIC CONTROL AND PROTECTION, STANDARD 701801	L SUM	1						1							
70103815	TRAFFIC CONTROL SURVEILLANCE	CAL DA	50	11	24		15									
70107025	CHANGEABLE MESSAGE SIGN	CAL DA	294	98	98	14	84									
70200100	NIGHTTIME WORK ZONE LIGHTING	L SUM	1	1												
70300100	SHORT TERM PAVEMENT MARKING	FOOT	300			300										
70300221	TEMPORARY PAVEMENT MARKING - LINE 4" - PAINT	FOOT	49,719	28,186		4,768	16,765									
70300241	TEMPORARY PAVEMENT MARKING - LINE 6" - PAINT	FOOT	614	614												
70300251	TEMPORARY PAVEMENT MARKING - LINE 8" - PAINT	FOOT	1,421			1,421										
70300281	TEMPORARY PAVEMENT MARKING - LINE 24" - PAINT	FOOT	163	93		70										
70303100	TEMPORARY PAVEMENT MARKING LETTERS AND SYMBOLS - MODIFIED URETHANE	SQ FT	4,359	4,359												
70303120	TEMPORARY PAVEMENT MARKING - LINE 4" - MODIFIED URETHANE	FOOT	254,861	152,167			102,695									
70303130	TEMPORARY PAVEMENT MARKING - LINE 6" - MODIFIED URETHANE	FOOT	27,937	21,939			5,998									
70303140	TEMPORARY PAVEMENT MARKING - LINE 8" - MODIFIED URETHANE	FOOT	22,400	16,400			6,000									

* SPECIALTY ITEM
\# NON-PARTICIPATING ITEM (100% STATE)
#FR NON-PARTICIPATING ITEM (100% FOUR RIVERS SANITARY)
#CV NON-PARTICIPATING ITEM (100% VILLAGE OF CHERRY VALLEY)

MODEL: Default
FILE NAME: pw:\benesch-pw.bentley.com:benesch-pw-01\Documents\10800s\10800\00\Eng Docs\CAD Sheets\General\D2164721-ODI-sht-SOQ-13.dgn

benesch
Alfred Benesch & Company
35 W. Wacker Drive, Suite 3300
Chicago, Illinois 60601
312-565-0150 Job No. 10800.00

USER NAME = JMaJcher	DESIGNED - A.GIBSON	REVISED -	
	DRAWN - N.REYNOLDS	REVISED -	
PLOT SCALE = 0.167 ' / In.	CHECKED - J.TARDY	REVISED -	
PLOT DATE = 12/6/2023	DATE - 10/13/2023	REVISED -	

STATE OF ILLINOIS
DEPARTMENT OF TRANSPORTATION

SUMMARY OF QUANTITIES

SCALE: N/A | SHEET 13 OF 29 SHEETS | STA. | TO STA.

F.A.* RTE.	SECTION	COUNTY	TOTAL SHEETS	SHEET NO.
*	(5)RS & (5&5HB)RC	WINNEBAGO	1279	19
		CONTRACT NO. 64R71		
	ILLINOIS	FED. AID PROJECT		

* FAI ROUTE 39 (I-39) & FAP ROUTE 525 (US 20)

				US 20 (EAST OF I-39)	HARRISON AVE (WEST OF I-39)	MALL DR	I-39 AND DDI RAMPS	I-39	BIKE PATH	ROADWAY LIGHTING & TEMPORARY TRAFFIC SIGNALS	FIBER	ROADWAY SIGNING		TRAFFIC SIGNALS		
				ROADWAY	ROADWAY	ROADWAY	ROADWAY	ROADWAY	HARRISON AVE	I-39, HARRISON AVE, AND DDI RAMPS	I-39	I-39 AND DDI RAMPS	HARRISON AVE	DDI RAMPS	MALL DR	MALL DR
				0003	0003	0004	0003	0021	0021	0021	0043	0044	0044	0021	0021	0021
CODE NO.	ITEM DESCRIPTION	UNIT	TOTAL QUANTITY	80% FED 20% STATE	80% FED 20% STATE	80% FED 20% STATE	80% FED 20% STATE	100% TOLLWAY	80% FED 20% STATE	80% FED 20% STATE	100% STATE	80% FED 20% STATE	80% FED 20% STATE	80% FED 20% STATE	80% FED 20% VILLAGE	100% CVFPD
70303160	TEMPORARY PAVEMENT MARKING - LINE 12"- MODIFIED URETHANE	FOOT	5,600	4,100			1,500									
70303210	TEMPORARY PAVEMENT MARKING - LINE 24"- MODIFIED URETHANE	FOOT	1,377	1,377												
70400100	TEMPORARY CONCRETE BARRIER	FOOT	26,413	18,750			7,663									
70400125	PINNING TEMPORARY CONCRETE BARRIER	EACH	2,293	2,056			237									
70400200	RELOCATE TEMPORARY CONCRETE BARRIER	FOOT	24,538	19,188			5,350									
70600250	IMPACT ATTENUATORS, TEMPORARY (NON- REDIRECTIVE), TEST LEVEL 3	EACH	9	8			1									
70600251	IMPACT ATTENUATORS, TEMPORARY (NON- REDIRECTIVE, NARROW), TEST LEVEL 3	EACH	2	2												
70600260	IMPACT ATTENUATORS, TEMPORARY (FULLY REDIRECTIVE, NARROW), TEST LEVEL 3	EACH	12	12												
70600270	IMPACT ATTENUATORS, TEMPORARY (FULLY REDIRECTIVE, WIDE), TEST LEVEL 3	EACH	2	2												
70600332	IMPACT ATTENUATORS, RELOCATE (FULLY REDIRECTIVE, NARROW), TEST LEVEL 3	EACH	15	13			2									
70600350	IMPACT ATTENUATORS, RELOCATE (NON- REDIRECTIVE), TEST LEVEL 3	EACH	17	11			6									
70600352	IMPACT ATTENUATORS, RELOCATE (NON- REDIRECTIVE,NARROW), TEST LEVEL 3	EACH	2	2												
* 72000100	SIGN PANEL - TYPE 1	SQ FT	1,139			10						289	678	97	65	
* 72000200	SIGN PANEL - TYPE 2	SQ FT	291									201	90			

* SPECIALTY ITEM
\# NON-PARTICIPATING ITEM (100% STATE)
\#FR NON-PARTICIPATING ITEM (100% FOUR RIVERS SANITARY)
\#CV NON-PARTICIPATING ITEM (100% VILLAGE OF CHERRY VALLEY)

MODEL: Default
FILE NAME: pw://benesch-pw.bentley.com:benesch-pw-01/Documents/10800s/10800.00/Eng_Docs/CAD_Sheets/General/D264R71-DDI-sht-SOQ-14.dgn

benesch
Alfred Benesch & Company
35 W. Wacker Drive, Suite 3300
Chicago, Illinois 60601
312-565-0450 Job No. 10800.00

USER NAME = JMajcher	DESIGNED - A.GIBSON	REVISED -	
	DRAWN - N.REYNOLDS	REVISED -	
PLOT SCALE = 0.167 ' / in.	CHECKED - J.TARDY	REVISED -	
PLOT DATE = 12/6/2023	DATE - 10/13/2023	REVISED -	

STATE OF ILLINOIS
DEPARTMENT OF TRANSPORTATION

SUMMARY OF QUANTITIES

SCALE: N/A | SHEET 14 OF 29 SHEETS | STA. | TO STA.

F.A.* RTE.	SECTION	COUNTY	TOTAL SHEETS	SHEET NO.
*	(5)RS & (5&5HB)RC	WINNEBAGO	1279	20
		CONTRACT NO. 64R71		
		ILLINOIS	FED. AID PROJECT	

* FAI ROUTE 39 (I-39) & FAP ROUTE 525 (US 20)

	CODE NO.	ITEM DESCRIPTION	UNIT	TOTAL QUANTITY	US 20 (EAST OF I-39)	HARRISON AVE (WEST OF I-39)	MALL DR	I-39 AND DDI RAMPS	I-39	BIKE PATH	ROADWAY LIGHTING & TEMPORARY TRAFFIC SIGNALS	FIBER	ROADWAY SIGNING		TRAFFIC SIGNALS		
					ROADWAY	ROADWAY	ROADWAY	ROADWAY	ROADWAY	HARRISON AVE	I-39, HARRISON AVE, AND DDI RAMPS	I-39	I-39 AND DDI RAMPS	HARRISON AVE	DDI RAMPS	MALL DR	MALL DR
					0003	0003	0004	0003	0021	0021	0021	0043	0044	0044	0021	0021	0021
					80% FED 20% STATE	80% FED 20% STATE	80% FED 20% STATE	80% FED 20% STATE	100% TOLLWAY	80% FED 20% STATE	80% FED 20% STATE	100% STATE	80% FED 20% STATE	80% FED 20% STATE	80% FED 20% STATE	80% FED 20% VILLAGE	100% CVFPD
*	72000300	SIGN PANEL - TYPE 3	SQ FT	3,679				68					2,347	1,264			
*	72200100	DEMOUNTABLE LEGEND CHARACTERS AND ARROWS	EACH	23	4			19									
*	72400310	REMOVE SIGN PANEL - TYPE 1	SQ FT	913									696	217			
*	72400320	REMOVE SIGN PANEL - TYPE 2	SQ FT	416									140	276			
*	72400330	REMOVE SIGN PANEL - TYPE 3	SQ FT	763									763				
*	72400710	RELOCATE SIGN PANEL - TYPE 1	SQ FT	2			2										
*	72400730	RELOCATE SIGN PANEL - TYPE 3	SQ FT	120									120				
*	72501000	TERMINAL MARKER - DIRECT APPLIED	EACH	1	1												
*	72700100	STRUCTURAL STEEL SIGN SUPPORT - BREAKAWAY	POUND	10,792									9,386	1,406			
*	72800100	TELESCOPING STEEL SIGN SUPPORT	FOOT	198									53	145			
*	73000100	WOOD SIGN SUPPORT	FOOT	1,620									807	813			
	73300100	OVERHEAD SIGN STRUCTURE - SPAN, TYPE I-A (4'-0" X 4'-6")	FOOT	310									150	160			
	73300200	OVERHEAD SIGN STRUCTURE - SPAN, TYPE II-A (4'-6" X 5'-3")	FOOT	110									110				
	73300300	OVERHEAD SIGN STRUCTURE - SPAN, TYPE III-A (5'-0" X 7'-0")	FOOT	130									130				

* SPECIALTY ITEM
\# NON-PARTICIPATING ITEM (100% STATE)
\#FR NON-PARTICIPATING ITEM (100% FOUR RIVERS SANITARY)
\#CV NON-PARTICIPATING ITEM (100% VILLAGE OF CHERRY VALLEY)

MODEL: Default
FILE NAME: pw://benesch-pw.bentley.com:benesch-pw-01/Documents/10800s/10800.00/Eng_Docs/CAD_Sheets/General/D264R71-DDI-sht-SOQ-15.dgn

benesch
Alfred Benesch & Company
35 W. Wacker Drive, Suite 3300
Chicago, Illinois 60601
312-565-0450 Job No. 10800.00

USER NAME = JMajcher	DESIGNED - A.GIBSON	REVISED -	
	DRAWN - N.REYNOLDS	REVISED -	
PLOT SCALE = 0.167 ' / in.	CHECKED - J.TARDY	REVISED -	
PLOT DATE = 12/6/2023	DATE - 10/13/2023	REVISED -	

STATE OF ILLINOIS
DEPARTMENT OF TRANSPORTATION

SUMMARY OF QUANTITIES

SCALE: N/A | SHEET 15 OF 29 SHEETS | STA. | TO STA.

F.A.* RTE.	SECTION	COUNTY	TOTAL SHEETS	SHEET NO.
*	(5)RS & (5&5HB)RC	WINNEBAGO	1279	21
		CONTRACT NO. 64R71		
		ILLINOIS	FED. AID PROJECT	

* FAI ROUTE 39 (I-39) & FAP ROUTE 525 (US 20)

REV. 12/11/23

				US 20 (EAST OF I-39)	HARRISON AVE (WEST OF I-39)	MALL DR	I-39 AND DDI RAMPS	I-39	BIKE PATH	ROADWAY LIGHTING & TEMPORARY TRAFFIC SIGNALS	FIBER	ROADWAY SIGNING		TRAFFIC SIGNALS		
				ROADWAY	ROADWAY	ROADWAY	ROADWAY	ROADWAY	HARRISON AVE	I-39, HARRISON AVE, AND DDI RAMPS	I-39	I-39 AND DDI RAMPS	HARRISON AVE	DDI RAMPS	MALL DR	MALL DR
	CODE NO.	ITEM DESCRIPTION	UNIT	TOTAL QUANTITY	0003	0003	0004	0003	0021	0021	0021	0043	0044	0044	0021	0021	0021
					80% FED 20% STATE	80% FED 20% STATE	80% FED 20% STATE	80% FED 20% STATE	100% TOLLWAY	80% FED 20% STATE	80% FED 20% STATE	100% STATE	80% FED 20% STATE	80% FED 20% STATE	80% FED 20% STATE	80% FED 20% VILLAGE	100% CVFPD
	73301810	OVERHEAD SIGN STRUCTURE WALKWAY, TYPE A	FOOT	277									156	121			
	73302210	OVERHEAD SIGN STRUCTURE - CANTILEVER, TYPE III-C-A (36" X 7'-0")	FOOT	40										40			
	73400100	CONCRETE FOUNDATIONS	CU YD	26									21	5			
*	73400200	DRILLED SHAFT CONCRETE FOUNDATIONS	CU YD	214.8									119.6	95.2			
	73600100	REMOVE OVERHEAD SIGN STRUCTURE - SPAN	EACH	3									1	2			
	73600200	REMOVE OVERHEAD SIGN STRUCTURE - CANTILEVER	EACH	5									3	2			
	73700100	REMOVE GROUND MOUNTED SIGN SUPPORT	EACH	12									12				
	73700200	REMOVE CONCRETE FOUNDATION - GROUND MOUNT	EACH	12									12				
	73700300	REMOVE CONCRETE FOUNDATION - OVERHEAD	EACH	11									5	6			
	73800005	REMOVE STRUCTURAL STEEL SUPPORT FOR OVERHEAD SIGN STRUCTURE - SPAN	EACH	6									2	4			
	73800010	REMOVE STRUCTURAL STEEL SUPPORT FOR OVERHEAD SIGN STRUCTURE - CANTILEVER	EACH	5									3	2			
*	78004600	PREFORMED PLASTIC PAVEMENT MARKING, TYPE D - STANDARD - LETTERS AND SYMBOLS	SQ FT	609	159	294		156									
*	78004620	PREFORMED PLASTIC PAVEMENT MARKING, TYPE D - STANDARD - LINE 4"	FOOT	23,225	4,986	9,315		8,924									
*	78004630	PREFORMED PLASTIC PAVEMENT MARKING, TYPE D - STANDARD - LINE 6"	FOOT	1,353		1,172		181									

* SPECIALTY ITEM
\# NON-PARTICIPATING ITEM (100% STATE)
#FR NON-PARTICIPATING ITEM (100% FOUR RIVERS SANITARY)
#CV NON-PARTICIPATING ITEM (100% VILLAGE OF CHERRY VALLEY)

benesch
Alfred Benesch & Company
35 W. Wacker Drive, Suite 3300
Chicago, Illinois 60601
312-565-0150 Job No. 10800.00

USER NAME = JMaJcher	DESIGNED - A.GIBSON	REVISED -	
	DRAWN - N.REYNOLDS	REVISED -	
PLOT SCALE = 0.167 ' / In.	CHECKED - J.TARDY	REVISED -	
PLOT DATE = 12/6/2023	DATE - 10/13/2023	REVISED -	

STATE OF ILLINOIS
DEPARTMENT OF TRANSPORTATION

SUMMARY OF QUANTITIES

SCALE: N/A | SHEET 16 OF 29 SHEETS | STA. | TO STA.

F.A.* RTE.	SECTION	COUNTY	TOTAL SHEETS	SHEET NO.
*	(5)RS & (5&5HB)RC	WINNEBAGO	1279	22
		CONTRACT NO. 64R71		
	ILLINOIS FED. AID PROJECT			

* FAI ROUTE 39 (I-39) & FAP ROUTE 525 (US 20)

REV. 12/11/23

MODEL: Default
FILE NAME: pw:\benesch-pw.bentley.com:benesch-pw-01\Documents\10800s\10800.00\Eng. Docs\CAD Sheets\General\D2164721-ODI-sht-SOQ-16.dgn

					US 20 (EAST OF I-39)	HARRISON AVE (WEST OF I-39)	MALL DR	I-39 AND DDI RAMPS	I-39	BIKE PATH	ROADWAY LIGHTING & TEMPORARY TRAFFIC SIGNALS	FIBER	ROADWAY SIGNING		TRAFFIC SIGNALS		
					ROADWAY	ROADWAY	ROADWAY	ROADWAY	ROADWAY	HARRISON AVE	I-39, HARRISON AVE, AND DDI RAMPS	I-39	I-39 AND DDI RAMPS	HARRISON AVE	DDI RAMPS	MALL DR	MALL DR
					0003	0003	0004	0003	0021	0021	0021	0043	0044	0044	0021	0021	0021
	CODE NO.	ITEM DESCRIPTION	UNIT	TOTAL QUANTITY	80% FED 20% STATE	80% FED 20% STATE	80% FED 20% STATE	80% FED 20% STATE	100% TOLLWAY	80% FED 20% STATE	80% FED 20% STATE	100% STATE	80% FED 20% STATE	80% FED 20% STATE	80% FED 20% STATE	80% FED 20% VILLAGE	100% CVFPD
*	78004640	PREFORMED PLASTIC PAVEMENT MARKING, TYPE D - STANDARD - LINE 8"	FOOT	4,537	1,167	1,824		1,546									
*	78004645	PREFORMED PLASTIC PAVEMENT MARKING, TYPE D - STANDARD - LINE 9"	FOOT	5,434	2,671	2,312		451									
*	78004655	PREFORMED PLASTIC PAVEMENT MARKING, TYPE D - STANDARD - LINE 11"	FOOT	2,773	357	1,695		721									
*	78004660	PREFORMED PLASTIC PAVEMENT MARKING, TYPE D - STANDARD - LINE 12"	FOOT	1,526	59	754		713									
*	78004720	PREFORMED PLASTIC PAVEMENT MARKING, TYPE D - STANDARD - LINE 24"	FOOT	302	38	205		59									
*	78009000	MODIFIED URETHANE PAVEMENT MARKING - LETTERS AND SYMBOLS	SQ FT	622	200	135	287										
*	78009004	MODIFIED URETHANE PAVEMENT MARKING - LINE 4"	FOOT	30,647	5,888	1,592	2,506	20,661									
*	78009006	MODIFIED URETHANE PAVEMENT MARKING - LINE 6"	FOOT	6,690	1,812	795		4,083									
*	78009008	MODIFIED URETHANE PAVEMENT MARKING - LINE 8"	FOOT	8,069	920	181	671	6,297									
*	78009012	MODIFIED URETHANE PAVEMENT MARKING - LINE 12"	FOOT	2,747	894		50	1,803									
*	78009024	MODIFIED URETHANE PAVEMENT MARKING - LINE 24"	FOOT	458	163	38	183	74									
*	78011000	GROOVING FOR RECESSED PAVEMENT MARKING, LETTERS AND SYMBOLS	SQ FT	648	173	306		169									
*	78011025	GROOVING FOR RECESSED PAVEMENT MARKING 5"	FOOT	23,225	4,986	9,315		8,924									
*	78011035	GROOVING FOR RECESSED PAVEMENT MARKING 7"	FOOT	1,353		1,172		181									

* SPECIALTY ITEM
\# NON-PARTICIPATING ITEM (100% STATE)
#FR NON-PARTICIPATING ITEM (100% FOUR RIVERS SANITARY)
#CV NON-PARTICIPATING ITEM (100% VILLAGE OF CHERRY VALLEY)

benesch
Alfred Benesch & Company
35 W. Wacker Drive, Suite 3300
Chicago, Illinois 60601
312-565-0150 Job No. 10800.00

USER NAME = JMaJcher	DESIGNED - A.GIBSON	REVISED -	
	DRAWN - N.REYNOLDS	REVISED -	
PLOT SCALE = 0.167 ' / In.	CHECKED - J.TARDY	REVISED -	
PLOT DATE = 12/6/2023	DATE - 10/13/2023	REVISED -	

STATE OF ILLINOIS
DEPARTMENT OF TRANSPORTATION

SUMMARY OF QUANTITIES

SCALE: N/A | SHEET 17 OF 29 SHEETS | STA. | TO STA.

F.A.* RTE.	SECTION	COUNTY	TOTAL SHEETS	SHEET NO.
*	(5)RS & (5&5HB)RC	WINNEBAGO	1279	23
		CONTRACT NO. 64R71		
	ILLINOIS	FED. AID PROJECT		

* FAI ROUTE 39 (I-39) & FAP ROUTE 525 (US 20)

MODEL: Default
FILE NAME: pw:\benesch-pw.bentley.com:benesch-pw-01\Documents\10800s\10800.00\Eng. Docs\CAD Sheets\General\D2164R71-ODI-sht-SOQ-17.dgn

					US 20 (EAST OF I-39)	HARRISON AVE (WEST OF I-39)	MALL DR	I-39 AND DDI RAMPS	I-39	BIKE PATH	ROADWAY LIGHTING & TEMPORARY TRAFFIC SIGNALS	FIBER	ROADWAY SIGNING		TRAFFIC SIGNALS		
					ROADWAY	ROADWAY	ROADWAY	ROADWAY	ROADWAY	HARRISON AVE	I-39, HARRISON AVE, AND DDI RAMPS	I-39	I-39 AND DDI RAMPS	HARRISON AVE	DDI RAMPS	MALL DR	MALL DR
	CODE NO.	ITEM DESCRIPTION	UNIT	TOTAL QUANTITY	0003	0003	0004	0003	0021	0021	0021	0043	0044	0044	0021	0021	0021
					80% FED 20% STATE	80% FED 20% STATE	80% FED 20% STATE	80% FED 20% STATE	100% TOLLWAY	80% FED 20% STATE	80% FED 20% STATE	100% STATE	80% FED 20% STATE	80% FED 20% STATE	80% FED 20% STATE	80% FED 20% VILLAGE	100% CVFPD
*	78011045	GROOVING FOR RECESSED PAVEMENT MARKING 9"	FOOT	4,537	1,167	1,824		1,546									
*	78011050	GROOVING FOR RECESSED PAVEMENT MARKING 10"	FOOT	5,434	2,671	2,312		451									
*	78011060	GROOVING FOR RECESSED PAVEMENT MARKING 12"	FOOT	2,773	357	1,695		721									
*	78011065	GROOVING FOR RECESSED PAVEMENT MARKING 13"	FOOT	1,526	59	754		713									
*	78011125	GROOVING FOR RECESSED PAVEMENT MARKING 25"	FOOT	302	38	205		59									
*	78100100	RAISED REFLECTIVE PAVEMENT MARKER	EACH	325	109	180		36									
	78100200	TEMPORARY RAISED REFLECTIVE PAVEMENT MARKER	EACH	1,875	884			991									
	78300200	RAISED REFLECTIVE PAVEMENT MARKER REMOVAL	EACH	1,875	884			991									
	78300201	PAVEMENT MARKING REMOVAL - GRINDING	SQ FT	34,046	32,552			1,494									
	78300202	PAVEMENT MARKING REMOVAL - WATER BLASTING	SQ FT	77,974	68,567		3,209	6,198									
*	80400100	ELECTRIC SERVICE INSTALLATION	EACH	1							1						
*	80500100	SERVICE INSTALLATION, TYPE A	EACH	3											2	1	
*	81028350	UNDERGROUND CONDUIT, PVC, 2" DIA.	FOOT	6,916											6,531	385	
*	81028360	UNDERGROUND CONDUIT, PVC, 2 1/2" DIA.	FOOT	77											57	20	

* SPECIALTY ITEM
\# NON-PARTICIPATING ITEM (100% STATE)
#FR NON-PARTICIPATING ITEM (100% FOUR RIVERS SANITARY)
#CV NON-PARTICIPATING ITEM (100% VILLAGE OF CHERRY VALLEY)

MODEL: Default
FILE NAME: pw:\benesch-pw.bentley.com:benesch-pw-01\Documents\10800s\10800\00\Eng. Docs\CAD Sheets\General\D2164R71-ODI-sht-SOQ-18.dgn

benesch
Alfred Benesch & Company
35 W. Wacker Drive, Suite 3300
Chicago, Illinois 60601
312-565-0150 Job No. 10800.00

USER NAME = JMaJcher	DESIGNED - A.GIBSON	REVISED -
	DRAWN - N.REYNOLDS	REVISED -
PLOT SCALE = 0.167 ' / In.	CHECKED - J.TARDY	REVISED -
PLOT DATE = 12/6/2023	DATE - 10/13/2023	REVISED -

STATE OF ILLINOIS
DEPARTMENT OF TRANSPORTATION

SUMMARY OF QUANTITIES

SCALE: N/A | SHEET 18 OF 29 SHEETS | STA. | TO STA.

F.A.* RTE.	SECTION	COUNTY	TOTAL SHEETS	SHEET NO.
*	(5)RS & (5&5HB)RC	WINNEBAGO	1279	24
		CONTRACT NO. 64R71		
	ILLINOIS FED. AID PROJECT			

* FAI ROUTE 39 (I-39) & FAP ROUTE 525 (US 20)

					US 20 (EAST OF I-39)	HARRISON AVE (WEST OF I-39)	MALL DR	I-39 AND DDI RAMPS	I-39	BIKE PATH	ROADWAY LIGHTING & TEMPORARY TRAFFIC SIGNALS	FIBER	ROADWAY SIGNING		TRAFFIC SIGNALS		
					ROADWAY	ROADWAY	ROADWAY	ROADWAY	ROADWAY	HARRISON AVE	I-39, HARRISON AVE, AND DDI RAMPS	I-39	I-39 AND DDI RAMPS	HARRISON AVE	DDI RAMPS	MALL DR	MALL DR
	CODE NO.	ITEM DESCRIPTION	UNIT	TOTAL QUANTITY	0003	0003	0004	0003	0021	0021	0021	0043	0044	0044	0021	0021	0021
					80% FED 20% STATE	80% FED 20% STATE	80% FED 20% STATE	80% FED 20% STATE	100% TOLLWAY	80% FED 20% STATE	80% FED 20% STATE	100% STATE	80% FED 20% STATE	80% FED 20% STATE	80% FED 20% STATE	80% FED 20% VILLAGE	100% CVFPD
*	81028370	UNDERGROUND CONDUIT, PVC, 3" DIA.	FOOT	1,521							1,189				172	160	
*	81028390	UNDERGROUND CONDUIT, PVC, 4" DIA.	FOOT	495											262	233	
*	81028400	UNDERGROUND CONDUIT, PVC, 5" DIA.	FOOT	1,240											1,240		
*	81400100	HANDHOLE	EACH	30											23	7	
*	81400300	DOUBLE HANDHOLE	EACH	4											3	1	
*	81603000	UNIT DUCT, 600V, 2-1C NO.8, 1/C NO.8 GROUND, (XLP-TYPE USE), 3/4" DIA. POLYETHYLENE	FOOT	2,475							2,475						
*	81603037	UNIT DUCT, 600V, 2-1C NO.6, 1/C NO.6 GROUND, (XLP-TYPE USE), 1 1/4" DIA. POLYETHYLENE	FOOT	99							99						
*	81603070	UNIT DUCT, 600V, 2-1C NO.2, 1/C NO.4 GROUND, (XLP-TYPE USE), 1 1/4" DIA. POLYETHYLENE	FOOT	410					410								
*	81603095	UNIT DUCT, 600V, 4-1C NO.2, 1/C NO.4 GROUND, (XLP-TYPE USE), 1 1/2" DIA. POLYETHYLENE	FOOT	420					420								
*	81603096	UNIT DUCT, 600V, 4-1C NO.8, 1/C NO.8 GROUND, (XLP-TYPE USE), 1 1/4" DIA. POLYETHYLENE	FOOT	14,980							14,980						
*	81702120	ELECTRIC CABLE IN CONDUIT, 600V (XLP-TYPE USE) 1/C NO. 8	FOOT	1,590							552					1,038	
*	81800230	AERIAL CABLE, 2-1/C NO. 6 WITH MESSENGER WIRE	FOOT	2,521							2,521						
*	82110008	LUMINAIRE, LED, ROADWAY, OUTPUT DESIGNATION H	EACH	93							89					4	
*	82500380	LIGHTING CONTROLLER, BASE MOUNTED, 480VOLT, 200AMP	EACH	1							1						

* SPECIALTY ITEM
\# NON-PARTICIPATING ITEM (100% STATE)
#FR NON-PARTICIPATING ITEM (100% FOUR RIVERS SANITARY)
#CV NON-PARTICIPATING ITEM (100% VILLAGE OF CHERRY VALLEY)

MODEL: Default
FILE NAME: pw:\benesch-pw.bentley.com:benesch-pw-01\Documents\10800s\10800\00\Eng_Docs\CAD_Sheets\General\D2R64R71-ODI-sht-SOQ-19.dgn

benesch
Alfred Benesch & Company
35 W. Wacker Drive, Suite 3300
Chicago, Illinois 60601
312-565-0150 Job No. 10800.00

USER NAME = JMaJcher	DESIGNED - A.GIBSON	REVISED -	
	DRAWN - N.REYNOLDS	REVISED -	
PLOT SCALE = 0.167 ' / In.	CHECKED - J.TARDY	REVISED -	
PLOT DATE = 12/6/2023	DATE - 10/13/2023	REVISED -	

STATE OF ILLINOIS
DEPARTMENT OF TRANSPORTATION

SUMMARY OF QUANTITIES

SCALE: N/A | SHEET 19 OF 29 SHEETS | STA. | TO STA.

F.A.* RTE.	SECTION	COUNTY	TOTAL SHEETS	SHEET NO.
*	(5)RS & (5&5HB)RC	WINNEBAGO	1279	25
		CONTRACT NO. 64R71		
	ILLINOIS	FED. AID PROJECT		

* FAI ROUTE 39 (I-39) & FAP ROUTE 525 (US 20)

					US 20 (EAST OF I-39)	HARRISON AVE (WEST OF I-39)	MALL DR	I-39 AND DDI RAMPS	I-39	BIKE PATH	ROADWAY LIGHTING & TEMPORARY TRAFFIC SIGNALS	FIBER	ROADWAY SIGNING		TRAFFIC SIGNALS		
					ROADWAY	ROADWAY	ROADWAY	ROADWAY	ROADWAY	HARRISON AVE	I-39, HARRISON AVE, AND DDI RAMPS	I-39	I-39 AND DDI RAMPS	HARRISON AVE	DDI RAMPS	MALL DR	MALL DR
	CODE NO.	ITEM DESCRIPTION	UNIT	TOTAL QUANTITY	0003	0003	0004	0003	0021	0021	0021	0043	0044	0044	0021	0021	0021
					80% FED 20% STATE	80% FED 20% STATE	80% FED 20% STATE	80% FED 20% STATE	100% TOLLWAY	80% FED 20% STATE	80% FED 20% STATE	100% STATE	80% FED 20% STATE	80% FED 20% STATE	80% FED 20% STATE	80% FED 20% VILLAGE	100% CVFPD
*	83003500	LIGHT POLE, ALUMINUM, 45 FT. M.H., 12 FT. DAVIT ARM	EACH	80							80						
*	83010600	LIGHT POLE, ALUMINUM, 50 FT. M.H., 15 FT. MAST ARM	EACH	4					4								
*	83057295	LIGHT POLE, WOOD, 50 FOOT, CLASS 4, WITH 15FT MAST ARM	EACH	4							4						
*	83600356	LIGHT POLE FOUNDATION, METAL, 15" BOLT CIRCLE, 8 5/8" X 6'	EACH	80							80						
*	83800506	BREAKAWAY DEVICE, COUPLING WITH ALUMINUM SKIRT OVER STAINLESS STEEL SCREEN	EACH	320							320						
*	84100110	REMOVAL OF TEMPORARY LIGHTING UNIT	EACH	18							18						
*	84200500	REMOVAL OF LIGHTING UNIT, SALVAGE	EACH	5							5						
*	84200600	REMOVAL OF LIGHTING UNIT, NO SALVAGE	EACH	4					4								
*	84200605	REMOVAL OF LIGHTING TOWER, NO SALVAGE	EACH	4							4						
*	84500110	REMOVAL OF LIGHTING CONTROLLER	EACH	1							1						
*	84500120	REMOVAL OF ELECTRIC SERVICE INSTALLATION	EACH	1							1						
*	84500130	REMOVAL OF LIGHTING CONTROLLER FOUNDATION	EACH	1							1						
*	85000200	MAINTENANCE OF EXISTING TRAFFIC SIGNAL INSTALLATION	EACH	1												1	
*	85700200	FULL-ACTUATED CONTROLLER AND TYPE IV CABINET	EACH	2											1	1	

* SPECIALTY ITEM
\# NON-PARTICIPATING ITEM (100% STATE)
#FR NON-PARTICIPATING ITEM (100% FOUR RIVERS SANITARY)
#CV NON-PARTICIPATING ITEM (100% VILLAGE OF CHERRY VALLEY)

benesch
Alfred Benesch & Company
35 W. Wacker Drive, Suite 3300
Chicago, Illinois 60601
312-565-0150 Job No. 10800.00

USER NAME = JMaJcher	DESIGNED - A.GIBSON	REVISED -	
	DRAWN - N.REYNOLDS	REVISED -	
PLOT SCALE = 0.167 ' / In.	CHECKED - J.TARDY	REVISED -	
PLOT DATE = 12/6/2023	DATE - 10/13/2023	REVISED -	

STATE OF ILLINOIS
DEPARTMENT OF TRANSPORTATION

SUMMARY OF QUANTITIES

SCALE: N/A | SHEET 20 OF 29 SHEETS | STA. | TO STA.

F.A.* RTE.	SECTION	COUNTY	TOTAL SHEETS	SHEET NO.
*	(5)RS & (5&5HB)RC	WINNEBAGO	1279	26
		CONTRACT NO. 64R71		
	ILLINOIS	FED. AID PROJECT		

* FAI ROUTE 39 (I-39) & FAP ROUTE 525 (US 20)

MODEL: Default
FILE NAME: pw:\benesch-pw.bentley.com:benesch-pw-01\Documents\10800\c\10800.00\Eng_Docs\CAD_Sheets\General\D2\64R71-ODI-sht-SOQ-20.dgn

					US 20 (EAST OF I-39)	HARRISON AVE (WEST OF I-39)	MALL DR	I-39 AND DDI RAMPS	I-39	BIKE PATH	ROADWAY LIGHTING & TEMPORARY TRAFFIC SIGNALS	FIBER	ROADWAY SIGNING		TRAFFIC SIGNALS		
					ROADWAY	ROADWAY	ROADWAY	ROADWAY	ROADWAY	HARRISON AVE	I-39, HARRISON AVE, AND DDI RAMPS	I-39	I-39 AND DDI RAMPS	HARRISON AVE	DDI RAMPS	MALL DR	MALL DR
	CODE NO.	ITEM DESCRIPTION	UNIT	TOTAL QUANTITY	0003	0003	0004	0003	0021	0021	0021	0043	0044	0044	0021	0021	0021
					80% FED 20% STATE	80% FED 20% STATE	80% FED 20% STATE	80% FED 20% STATE	100% TOLLWAY	80% FED 20% STATE	80% FED 20% STATE	100% STATE	80% FED 20% STATE	80% FED 20% STATE	80% FED 20% STATE	80% FED 20% VILLAGE	100% CVFPD
*	86000100	MASTER CONTROLLER	EACH	1												1	
*	86200300	UNINTERRUPTABLE POWER SUPPLY, EXTENDED	EACH	3											2	1	
*	86400100	TRANSCEIVER - FIBER OPTIC	EACH	4											3	1	
*	87300925	ELECTRIC CABLE IN CONDUIT, TRACER, NO. 14 1C	FOOT	6,166											6,166		
*	87301215	ELECTRIC CABLE IN CONDUIT, SIGNAL NO. 14 2C	FOOT	7,291											6,955	336	
*	87301225	ELECTRIC CABLE IN CONDUIT, SIGNAL NO. 14 3C	FOOT	7,361											7,011	350	
*	87301245	ELECTRIC CABLE IN CONDUIT, SIGNAL NO. 14 5C	FOOT	30,934											28,057	2,877	
*	87301255	ELECTRIC CABLE IN CONDUIT, SIGNAL NO. 14 7C	FOOT	2,604												2,604	
*	87301805	ELECTRIC CABLE IN CONDUIT, SERVICE, NO. 6 2 C	FOOT	651											472	179	
*	87301900	ELECTRIC CABLE IN CONDUIT, EQUIPMENT GROUNDING CONDUCTOR, NO. 6 1C	FOOT	3,953											3,104	849	
*	87501300	TRAFFIC SIGNAL POST, 17 FT.	EACH	17											13	4	
*	87700150	STEEL MAST ARM ASSEMBLY AND POLE, 22 FT.	EACH	1											1		
*	87700250	STEEL MAST ARM ASSEMBLY AND POLE, 42 FT.	EACH	1											1		
*	87702850	STEEL COMBINATION MAST ARM ASSEMBLY AND POLE 24 FT.	EACH	1											1		

* SPECIALTY ITEM
\# NON-PARTICIPATING ITEM (100% STATE)
#FR NON-PARTICIPATING ITEM (100% FOUR RIVERS SANITARY)
#CV NON-PARTICIPATING ITEM (100% VILLAGE OF CHERRY VALLEY)

MODEL: Default
FILE NAME: pw:\benesch-pw.bentley.com:benesch-pw-01\Documents\10800s\10800s\10800.00\Eng_Docs\CAD_Sheets\General\D2164R71-ODI-sht-SOQ-21.dgn

benesch
Alfred Benesch & Company
35 W. Wacker Drive, Suite 3300
Chicago, Illinois 60601
312-565-0150 Job No. 10800.00

USER NAME = JMaJcher	DESIGNED - A.GIBSON	REVISED -
	DRAWN - N.REYNOLDS	REVISED -
PLOT SCALE = 0.167 ' / In.	CHECKED - J.TARDY	REVISED -
PLOT DATE = 12/6/2023	DATE - 10/13/2023	REVISED -

STATE OF ILLINOIS
DEPARTMENT OF TRANSPORTATION

SUMMARY OF QUANTITIES

SCALE: N/A | SHEET 21 OF 29 SHEETS | STA. | TO STA.

F.A.* RTE.	SECTION	COUNTY	TOTAL SHEETS	SHEET NO.
*	(5)RS & (5&5HB)RC	WINNEBAGO	1279	27
		CONTRACT NO. 64R71		
	ILLINOIS	FED. AID PROJECT		

* FAI ROUTE 39 (I-39) & FAP ROUTE 525 (US 20)

					US 20 (EAST OF I-39)	HARRISON AVE (WEST OF I-39)	MALL DR	I-39 AND DDI RAMPS	I-39	BIKE PATH	ROADWAY LIGHTING & TEMPORARY TRAFFIC SIGNALS	FIBER	ROADWAY SIGNING		TRAFFIC SIGNALS		
					ROADWAY	ROADWAY	ROADWAY	ROADWAY	ROADWAY	HARRISON AVE	I-39, HARRISON AVE, AND DDI RAMPS	I-39	I-39 AND DDI RAMPS	HARRISON AVE	DDI RAMPS	MALL DR	MALL DR
	CODE NO.	ITEM DESCRIPTION	UNIT	TOTAL QUANTITY	0003	0003	0004	0003	0021	0021	0021	0043	0044	0044	0021	0021	0021
					80% FED 20% STATE	80% FED 20% STATE	80% FED 20% STATE	80% FED 20% STATE	100% TOLLWAY	80% FED 20% STATE	80% FED 20% STATE	100% STATE	80% FED 20% STATE	80% FED 20% STATE	80% FED 20% STATE	80% FED 20% VILLAGE	100% CVFPD
*	87702860	STEEL COMBINATION MAST ARM ASSEMBLY AND POLE 26 FT.	EACH	1											1		
*	87702880	STEEL COMBINATION MAST ARM ASSEMBLY AND POLE 30 FT.	EACH	2											1	1	
*	87702890	STEEL COMBINATION MAST ARM ASSEMBLY AND POLE 32 FT.	EACH	1											1		
*	87702910	STEEL COMBINATION MAST ARM ASSEMBLY AND POLE 36 FT.	EACH	1												1	
*	87702940	STEEL COMBINATION MAST ARM ASSEMBLY AND POLE 42 FT.	EACH	1											1		
*	87702950	STEEL COMBINATION MAST ARM ASSEMBLY AND POLE 44 FT.	EACH	1											1		
*	87702970	STEEL COMBINATION MAST ARM ASSEMBLY AND POLE 48 FT.	EACH	1												1	
*	87703020	STEEL COMBINATION MAST ARM ASSEMBLY AND POLE 58 FT.	EACH	1												1	
*	87800100	CONCRETE FOUNDATION, TYPE A	FOOT	51											39	12	
*	87800150	CONCRETE FOUNDATION, TYPE C	FOOT	9											6	3	
*	87800400	CONCRETE FOUNDATION, TYPE E 30-INCH DIAMETER	FOOT	34											34		
*	87800415	CONCRETE FOUNDATION, TYPE E 36-INCH DIAMETER	FOOT	99											63	36	
*	87800420	CONCRETE FOUNDATION, TYPE E 42-INCH DIAMETER	FOOT	21												21	
*	88040070	SIGNAL HEAD, POLYCARBONATE, LED, 1-FACE, 3-SECTION, BRACKET MOUNTED	EACH	19											17	2	

* SPECIALTY ITEM
\# NON-PARTICIPATING ITEM (100% STATE)
#FR NON-PARTICIPATING ITEM (100% FOUR RIVERS SANITARY)
#CV NON-PARTICIPATING ITEM (100% VILLAGE OF CHERRY VALLEY)

MODEL: Default
FILE NAME: pw:\benesch-pw.bentley.com:benesch-pw-01\Documents\10800s\10800\00\Eng_Docs\CAD_Sheets\General\D2164R71-ODI-sht-SOQ-22.dgn

benesch
Alfred Benesch & Company
35 W. Wacker Drive, Suite 3300
Chicago, Illinois 60601
312-565-0150 Job No. 10800.00

USER NAME = JMaJcher	DESIGNED - A.GIBSON	REVISED -
	DRAWN - N.REYNOLDS	REVISED -
PLOT SCALE = 0.167 ' / In.	CHECKED - J.TARDY	REVISED -
PLOT DATE = 12/6/2023	DATE - 10/13/2023	REVISED -

STATE OF ILLINOIS
DEPARTMENT OF TRANSPORTATION

SUMMARY OF QUANTITIES

SCALE: N/A | SHEET 22 OF 29 SHEETS | STA. | TO STA.

F.A.* RTE.	SECTION	COUNTY	TOTAL SHEETS	SHEET NO.
*	(5)RS & (5&5HB)RC	WINNEBAGO	1279	28
		CONTRACT NO. 64R71		
	ILLINOIS FED. AID PROJECT			

* FAI ROUTE 39 (I-39) & FAP ROUTE 525 (US 20)

					US 20 (EAST OF I-39)	HARRISON AVE (WEST OF I-39)	MALL DR	I-39 AND DDI RAMPS	I-39	BIKE PATH	ROADWAY LIGHTING & TEMPORARY TRAFFIC SIGNALS	FIBER	ROADWAY SIGNING		TRAFFIC SIGNALS		
					ROADWAY	ROADWAY	ROADWAY	ROADWAY	ROADWAY	HARRISON AVE	I-39, HARRISON AVE, AND DDI RAMPS	I-39	I-39 AND DDI RAMPS	HARRISON AVE	DDI RAMPS	MALL DR	MALL DR
	CODE NO.	ITEM DESCRIPTION	UNIT	TOTAL QUANTITY	0003	0003	0004	0003	0021	0021	0021	0043	0044	0044	0021	0021	0021
					80% FED 20% STATE	80% FED 20% STATE	80% FED 20% STATE	80% FED 20% STATE	100% TOLLWAY	80% FED 20% STATE	80% FED 20% STATE	100% STATE	80% FED 20% STATE	80% FED 20% STATE	80% FED 20% STATE	80% FED 20% VILLAGE	100% CVFPD
*	88040090	SIGNAL HEAD, POLYCARBONATE, LED, 1-FACE, 3-SECTION, MAST ARM MOUNTED	EACH	28											17	11	
*	88040110	SIGNAL HEAD, POLYCARBONATE, LED, 1-FACE, 4-SECTION, BRACKET MOUNTED	EACH	2												2	
*	88040120	SIGNAL HEAD, POLYCARBONATE, LED, 1-FACE, 4-SECTION, MAST ARM MOUNTED	EACH	2												2	
*	88040150	SIGNAL HEAD, POLYCARBONATE, LED, 1-FACE, 5-SECTION, BRACKET MOUNTED	EACH	8												8	
*	88102825	PEDESTRIAN SIGNAL HEAD, POLYCARBONATE, LED, 1-FACE, BRACKET MOUNTED WITH COUNT DOWN TIMER	EACH	10											8	2	
*	88200510	TRAFFIC SIGNAL BACKPLATE, RETROREFLECTIVE	EACH	30											17	13	
	89000100	TEMPORARY TRAFFIC SIGNAL INSTALLATION	EACH	3							3						
	89502375	REMOVE EXISTING TRAFFIC SIGNAL EQUIPMENT	EACH	1							1						
	89502380	REMOVE EXISTING HANDHOLE	EACH	9							9						
	89502382	REMOVE EXISTING DOUBLE HANDHOLE	EACH	1							1						
	89502385	REMOVE EXISTING CONCRETE FOUNDATION	EACH	9							9						
	Z0000100	ABANDON EXISTING CULVERT	EACH	1		1											
#*	Z0010614	CLEANING EXISTING MANHOLE OR HANDHOLE	EACH	3								3					
	Z0013797	STABILIZED CONSTRUCTION ENTRANCE	SQ YD	3,808	1,344	1,456		1,008									

* SPECIALTY ITEM
\# NON-PARTICIPATING ITEM (100% STATE)
#FR NON-PARTICIPATING ITEM (100% FOUR RIVERS SANITARY)
#CV NON-PARTICIPATING ITEM (100% VILLAGE OF CHERRY VALLEY)

benesch
Alfred Benesch & Company
35 W. Wacker Drive, Suite 3300
Chicago, Illinois 60601
312-565-0150 Job No. 10800.00

USER NAME = JMaJcher	DESIGNED - A.GIBSON	REVISED -	
	DRAWN - N.REYNOLDS	REVISED -	
PLOT SCALE = 0.167 ' / In.	CHECKED - J.TARDY	REVISED -	
PLOT DATE = 12/6/2023	DATE - 10/13/2023	REVISED -	

STATE OF ILLINOIS
DEPARTMENT OF TRANSPORTATION

SUMMARY OF QUANTITIES

SCALE: N/A | SHEET 23 OF 29 SHEETS | STA. | TO STA.

F.A.* RTE.	SECTION	COUNTY	TOTAL SHEETS	SHEET NO.
*	(5)RS & (5&5HB)RC	WINNEBAGO	1279	29
		CONTRACT NO. 64R71		
	ILLINOIS FED. AID PROJECT			

* FAI ROUTE 39 (I-39) & FAP ROUTE 525 (US 20)

REV. 12/11/23

MODEL: Default
FILE NAME: pw:\benesch-pw.bentley.com:benesch-pw-01\Documents\10800s\10800.00\Eng. Docs\CAD Sheets\General\D2164R71-ODI-sht-SOQ-23.dgn

				US 20 (EAST OF I-39)	HARRISON AVE (WEST OF I-39)	MALL DR	I-39 AND DDI RAMPS	I-39	BIKE PATH	ROADWAY LIGHTING & TEMPORARY TRAFFIC SIGNALS	FIBER	ROADWAY SIGNING		TRAFFIC SIGNALS		
				ROADWAY	ROADWAY	ROADWAY	ROADWAY	ROADWAY	HARRISON AVE	I-39, HARRISON AVE, AND DDI RAMPS	I-39	I-39 AND DDI RAMPS	HARRISON AVE	DDI RAMPS	MALL DR	MALL DR
				0003	0003	0004	0003	0021	0021	0021	0043	0044	0044	0021	0021	0021
CODE NO.	ITEM DESCRIPTION	UNIT	TOTAL QUANTITY	80% FED 20% STATE	80% FED 20% STATE	80% FED 20% STATE	80% FED 20% STATE	100% TOLLWAY	80% FED 20% STATE	80% FED 20% STATE	100% STATE	80% FED 20% STATE	80% FED 20% STATE	80% FED 20% STATE	80% FED 20% VILLAGE	100% CVFPD
Z0016702	DETOUR SIGNING	L SUM	1	1												
Z0018400	DRAINAGE STRUCTURES TO BE ADJUSTED	EACH	4		4											
Z0018700	DRAINAGE STRUCTURE TO BE REMOVED	EACH	38	2	4		32									
Z0022800	FENCE REMOVAL	FOOT	812	488			324									
* Z0025505	PROPERTY MARKERS	EACH	2	2												
Z0028415	GEOTECHNICAL REINFORCEMENT	SQ YD	120,556	31,642	52,249	4,683	31,982									
Z0029604	HEADWALL REMOVAL	EACH	4	2	2											
Z0033024	MAINTAIN EXISTING LIGHTING SYSTEM	L SUM	1					1								
* Z0033028	MAINTENANCE OF LIGHTING SYSTEM	CAL MO	15							15						
* Z0033056	OPTIMIZE TRAFFIC SIGNAL SYSTEM	EACH	1												1	
Z0051398	REMOVE EXISTING SIGN POST	EACH	2										2			
Z0056610	STORM SEWER (WATER MAIN REQUIREMENTS) 15 INCH	FOOT	31			31										
Z0056616	STORM SEWER (WATER MAIN REQUIREMENTS) 24 INCH	FOOT	24			24										
Z0062456	TEMPORARY PAVEMENT	SQ YD	19,625	19,625												

* SPECIALTY ITEM
\# NON-PARTICIPATING ITEM (100% STATE)
#FR NON-PARTICIPATING ITEM (100% FOUR RIVERS SANITARY)
#CV NON-PARTICIPATING ITEM (100% VILLAGE OF CHERRY VALLEY)

benesch
Alfred Benesch & Company
35 W. Wacker Drive, Suite 3300
Chicago, Illinois 60601
312-565-0150 Job No. 10800.00

USER NAME = JMaJcher	DESIGNED - A.GIBSON	REVISED -	
	DRAWN - N.REYNOLDS	REVISED -	
PLOT SCALE = 0.167 ' / In.	CHECKED - J.TARDY	REVISED -	
PLOT DATE = 12/6/2023	DATE - 10/13/2023	REVISED -	

STATE OF ILLINOIS
DEPARTMENT OF TRANSPORTATION

SUMMARY OF QUANTITIES

SCALE: N/A | SHEET 24 OF 29 SHEETS | STA. | TO STA.

F.A.* RTE.	SECTION	COUNTY	TOTAL SHEETS	SHEET NO.
*	(5)RS & (5&5HB)RC	WINNEBAGO	1279	30
		CONTRACT NO. 64R71		
	ILLINOIS FED. AID PROJECT			

* FAI ROUTE 39 (I-39) & FAP ROUTE 525 (US 20)

MODEL: Default
FILE NAME: pw:\benesch-pw.bentley.com:benesch-pw-01\Documents\10800s\10800.00\Eng Docs\CAD Sheets\General\D2164R71-ODI-sht-SOQ-24.dgn

				US 20 (EAST OF I-39)	HARRISON AVE (WEST OF I-39)	MALL DR	I-39 AND DDI RAMPS	I-39	BIKE PATH	ROADWAY LIGHTING & TEMPORARY TRAFFIC SIGNALS	FIBER	ROADWAY SIGNING		TRAFFIC SIGNALS		
				ROADWAY	ROADWAY	ROADWAY	ROADWAY	ROADWAY	HARRISON AVE	I-39, HARRISON AVE, AND DDI RAMPS	I-39	I-39 AND DDI RAMPS	HARRISON AVE	DDI RAMPS	MALL DR	MALL DR
				0003	0003	0004	0003	0021	0021	0021	0043	0044	0044	0021	0021	0021
CODE NO.	ITEM DESCRIPTION	UNIT	TOTAL QUANTITY	80% FED 20% STATE	80% FED 20% STATE	80% FED 20% STATE	80% FED 20% STATE	100% TOLLWAY	80% FED 20% STATE	80% FED 20% STATE	100% STATE	80% FED 20% STATE	80% FED 20% STATE	80% FED 20% STATE	80% FED 20% VILLAGE	100% CVFPD
Z0062458	TEMPORARY PAVEMENT (VARIABLE DEPTH)	TON	917	917												
Z0065765	SLOTTED DRAIN 18" WITH VARIABLE SLOT	FOOT	387	15	260		112									
Z0073345	SLEEPER SLAB	FOOT	344	127	217											
Z0073510	TEMPORARY TRAFFIC SIGNAL TIMING	EACH	35							35						
X0320050	CONSTRUCTION LAYOUT (SPECIAL)	L SUM	1	1												
* X0322281	WIDE AREA VIDEO DETECTION SYSTEM COMPLETE	EACH	3											2	1	
* X0322920	COMMUNICATIONS CABINET AND EQUIPMENT	EACH	1											1		
X0323868	DRAINAGE RESTRICTOR	EACH	2	2												
X0325815	REMOVE EXISTING CABLE	FOOT	5,866							5,866						
* X0325839	SIGNAL TIMING	L SUM	1											0.5	0.5	
X0326806	WASHOUT BASIN	L SUM	1	1												
* X0327236	TEMPORARY WOOD POLE, 50 FT., CLASS 4	EACH	48							14	34					
#FR X1200037	SANITARY SEWER MAIN LINE REPAIR 8"	FOOT	15		15											
X1200043	PRECAST CONCRETE JUNCTION CHAMBER	EACH	1	1												

* SPECIALTY ITEM
\# NON-PARTICIPATING ITEM (100% STATE)
#FR NON-PARTICIPATING ITEM (100% FOUR RIVERS SANITARY)
#CV NON-PARTICIPATING ITEM (100% VILLAGE OF CHERRY VALLEY)

MODEL: Default
FILE NAME: pw://benesch-pw.bentley.com:benesch-pw-01/Documents/10800s/10800.00/Eng_Docs/CAD_Sheets/General/D264R71-DDI-sht-SOQ-25.dgn

benesch
Alfred Benesch & Company
35 W. Wacker Drive, Suite 3300
Chicago, Illinois 60601
312-565-0450 Job No. 10800.00

USER NAME = JMajcher	DESIGNED - A.GIBSON	REVISED -	
	DRAWN - N.REYNOLDS	REVISED -	
PLOT SCALE = 0.167 ' / in.	CHECKED - J.TARDY	REVISED -	
PLOT DATE = 12/6/2023	DATE - 10/13/2023	REVISED -	

STATE OF ILLINOIS
DEPARTMENT OF TRANSPORTATION

SUMMARY OF QUANTITIES

SCALE: N/A | SHEET 25 OF 29 SHEETS | STA. | TO STA.

F.A.* RTE.	SECTION	COUNTY	TOTAL SHEETS	SHEET NO.
*	(5)RS & (5&5HB)RC	WINNEBAGO	1279	31
		CONTRACT NO. 64R71		
		ILLINOIS	FED. AID PROJECT	

* FAI ROUTE 39 (I-39) & FAP ROUTE 525 (US 20)

REV. 12/11/23

					US 20 (EAST OF I-39)	HARRISON AVE (WEST OF I-39)	MALL DR	I-39 AND DDI RAMPS	I-39	BIKE PATH	ROADWAY LIGHTING & TEMPORARY TRAFFIC SIGNALS	FIBER	ROADWAY SIGNING		TRAFFIC SIGNALS		
					ROADWAY	ROADWAY	ROADWAY	ROADWAY	ROADWAY	HARRISON AVE	I-39, HARRISON AVE, AND DDI RAMPS	I-39	I-39 AND DDI RAMPS	HARRISON AVE	DDI RAMPS	MALL DR	MALL DR
	CODE NO.	ITEM DESCRIPTION	UNIT	TOTAL QUANTITY	0003	0003	0004	0003	0021	0021	0021	0043	0044	0044	0021	0021	0021
					80% FED 20% STATE	80% FED 20% STATE	80% FED 20% STATE	80% FED 20% STATE	100% TOLLWAY	80% FED 20% STATE	80% FED 20% STATE	100% STATE	80% FED 20% STATE	80% FED 20% STATE	80% FED 20% STATE	80% FED 20% VILLAGE	100% CVFPD
	X1200050	BOX CULVERT REMOVAL	FOOT	440	265	175											
	X1400146	HELIX FOUNDATION AND BREAKAWAY DEVICE	EACH	4					4								
*	X1400238	LUMINAIRE, LED, SPECIAL	EACH	4					4								
#*	X1400241	FIBER OPTIC CABLE, AERIAL, 96 FIBERS, SINGLE MODE	FOOT	22,705								22,705					
#*	X1400282	POLYETHYLENE DUCT, 1 1/4" DIA	FOOT	1,304								1,304					
#	X2503000	MAINTENANCE MOWING	ACRE	740	740												
	X3030113	AGGREGATE SUBGRADE IMPROVEMENT 12" (SPECIAL)	SQ YD	550					550								
	X4062457	TEMPORARY PAVEMENT (INTERSTATE)	SQ YD	10,919				10,919									
	X4400110	TEMPORARY PAVEMENT REMOVAL	SQ YD	38,499	32,706			5,793									
	X4400196	HOT-MIX ASPHALT SURFACE REMOVAL (SPECIAL)	SQ YD	123			123										
	X4402805	ISLAND REMOVAL	SQ FT	1,739			1,739										
	X5010520	REMOVE CONCRETE BOX CULVERT END SECTION	EACH	4	2	2											
	X5429311	TRAVERSABLE PIPE GRATE (SPECIAL)	FOOT	58		58											
	X5509900	ABANDON AND FILL EXISTING STORM SEWER	FOOT	30	30												

* SPECIALTY ITEM
\# NON-PARTICIPATING ITEM (100% STATE)
#FR NON-PARTICIPATING ITEM (100% FOUR RIVERS SANITARY)
#CV NON-PARTICIPATING ITEM (100% VILLAGE OF CHERRY VALLEY)

MODEL: Default
FILE NAME: pw:\benesch-pw.bentley.com:benesch-pw-01\Documents\10800s\10800\00\Eng Docs\CAD Sheets\General\D2164R71-ODI-sht-SOQ-26.dgn

benesch
Alfred Benesch & Company
35 W. Wacker Drive, Suite 3300
Chicago, Illinois 60601
312-565-0150 Job No. 10800.00

USER NAME = JMaJcher	DESIGNED - A.GIBSON	REVISED -
	DRAWN - N.REYNOLDS	REVISED -
PLOT SCALE = 0.167 ' / In.	CHECKED - J.TARDY	REVISED -
PLOT DATE = 12/6/2023	DATE - 10/13/2023	REVISED -

STATE OF ILLINOIS
DEPARTMENT OF TRANSPORTATION

SUMMARY OF QUANTITIES

SCALE: N/A | SHEET 26 OF 29 SHEETS | STA. | TO STA.

F.A.* RTE.	SECTION	COUNTY	TOTAL SHEETS	SHEET NO.
*	(5)RS & (5&5HB)RC	WINNEBAGO	1279	32
		CONTRACT NO. 64R71		
	ILLINOIS FED. AID PROJECT			

* FAI ROUTE 39 (I-39) & FAP ROUTE 525 (US 20)

REV. 12/11/23

				US 20 (EAST OF I-39)	HARRISON AVE (WEST OF I-39)	MALL DR	I-39 AND DDI RAMPS	I-39	BIKE PATH	ROADWAY LIGHTING & TEMPORARY TRAFFIC SIGNALS	FIBER	ROADWAY SIGNING		TRAFFIC SIGNALS		
				ROADWAY	ROADWAY	ROADWAY	ROADWAY	ROADWAY	HARRISON AVE	I-39, HARRISON AVE, AND DDI RAMPS	I-39	I-39 AND DDI RAMPS	HARRISON AVE	DDI RAMPS	MALL DR	MALL DR
				0003	0003	0004	0003	0021	0021	0021	0043	0044	0044	0021	0021	0021
CODE NO.	ITEM DESCRIPTION	UNIT	TOTAL QUANTITY	80% FED 20% STATE	80% FED 20% STATE	80% FED 20% STATE	80% FED 20% STATE	100% TOLLWAY	80% FED 20% STATE	80% FED 20% STATE	100% STATE	80% FED 20% STATE	80% FED 20% STATE	80% FED 20% STATE	80% FED 20% VILLAGE	100% CVFPD
X6020001	CONTROL STRUCTURES NO. 1 (SPECIAL)	EACH	1				1									
X6020002	CONTROL STRUCTURES NO. 2 (SPECIAL)	EACH	1	1												
X6020003	CONTROL STRUCTURES NO. 3 (SPECIAL)	EACH	1	1												
X6020004	CONTROL STRUCTURES NO. 4 (SPECIAL)	EACH	1		1											
X6020005	CONTROL STRUCTURES NO. 5 (SPECIAL)	EACH	1				1									
X6020006	CONTROL STRUCTURES NO. 6 (SPECIAL)	EACH	1				1									
X6020076	INLETS, SPECIAL, WITH SPECIAL FRAME AND GRATE	EACH	13	3	8		2									
X6020184	TEMPORARY DRAINAGE CONNECTION	EACH	52	16	36											
X6020241	CATCH BASIN, TYPE A 4'-DIAMETER, WITH GRATE NO. 1 (SPECIAL)	EACH	5		2	1	2									
X6020243	CATCH BASIN, TYPE A 5'-DIAMETER, WITH GRATE NO. 1 (SPECIAL)	EACH	5		1		4									
X6020290	MANHOLES, TYPE A, 7'-DIAMETER, WITH SPECIAL FRAME AND GRATE	EACH	2		2											
X6024090	MANHOLES, TYPE A, 6'-DIAMETER, WITH SPECIAL FRAME AND GRATE	EACH	3		1	1	1									
X6024210	DOUBLE INLET (SPECIAL)	EACH	2		2											
X6024240	INLETS (SPECIAL)	EACH	51	20	31											

* SPECIALTY ITEM
\# NON-PARTICIPATING ITEM (100% STATE)
#FR NON-PARTICIPATING ITEM (100% FOUR RIVERS SANITARY)
#CV NON-PARTICIPATING ITEM (100% VILLAGE OF CHERRY VALLEY)

MODEL: Default
FILE NAME: pw:\benesch-pw.bentley.com:benesch-pw-01\Documents\10800s\10800\00\Eng Docs\CAD Sheets\General\D2164R71-ODI-sht-SOQ-27.dgn

benesch
Alfred Benesch & Company
35 W. Wacker Drive, Suite 3300
Chicago, Illinois 60601
312-565-0150 Job No. 10800.00

USER NAME = JMaJcher	DESIGNED - A.GIBSON	REVISED -	
	DRAWN - N.REYNOLDS	REVISED -	
PLOT SCALE = 0.167 ' / In.	CHECKED - J.TARDY	REVISED -	
PLOT DATE = 12/6/2023	DATE - 10/13/2023	REVISED -	

STATE OF ILLINOIS
DEPARTMENT OF TRANSPORTATION

SUMMARY OF QUANTITIES

SCALE: N/A | SHEET 27 OF 29 SHEETS | STA. | TO STA.

F.A.* RTE.	SECTION	COUNTY	TOTAL SHEETS	SHEET NO.
*	(5)RS & (5&5HB)RC	WINNEBAGO	1279	33
		CONTRACT NO. 64R71		
	ILLINOIS	FED. AID PROJECT		

* FAI ROUTE 39 (I-39) & FAP ROUTE 525 (US 20)

					US 20 (EAST OF I-39)	HARRISON AVE (WEST OF I-39)	MALL DR	I-39 AND DDI RAMPS	I-39	BIKE PATH	ROADWAY LIGHTING & TEMPORARY TRAFFIC SIGNALS	FIBER	ROADWAY SIGNING		TRAFFIC SIGNALS		
					ROADWAY	ROADWAY	ROADWAY	ROADWAY	ROADWAY	HARRISON AVE	I-39, HARRISON AVE, AND DDI RAMPS	I-39	I-39 AND DDI RAMPS	HARRISON AVE	DDI RAMPS	MALL DR	MALL DR
	CODE NO.	ITEM DESCRIPTION	UNIT	TOTAL QUANTITY	0003	0003	0004	0003	0021	0021	0021	0043	0044	0044	0021	0021	0021
					80% FED 20% STATE	80% FED 20% STATE	80% FED 20% STATE	80% FED 20% STATE	100% TOLLWAY	80% FED 20% STATE	80% FED 20% STATE	100% STATE	80% FED 20% STATE	80% FED 20% STATE	80% FED 20% STATE	80% FED 20% VILLAGE	100% CVFPD
#FR	X6026054	SANITARY MANHOLES TO BE REMOVED	EACH	1		1											
#FR	X6026056	SANITARY MANHOLES TO BE ADJUSTED WITH NEW TYPE 1 FRAME, CLOSED LID	EACH	1		1											
#FR	X6026057	SANITARY MANHOLES TO BE RECONSTRUCTED WITH NEW TYPE 1 FRAME, CLOSED LID	EACH	1		1											
	X6060714	CONCRETE MEDIAN (SPECIAL)	SQ FT	10,517	3,844	6,673											
	X6350206	LINEAR DELINEATOR PANELS, 6 INCH	EACH	214	163			51									
	X6430120	REMOVE IMPACT ATTENUATORS, NO SALVAGE	EACH	2	1	1											
	X6431110	REMOVE ATTENUATOR BASE	EACH	2	1	1											
	X6700410	ENGINEER'S FIELD OFFICE, TYPE A (SPECIAL)	CAL MO	16	16												
	X7010005	MAINTENANCE OF TRAFFIC (ILLINOIS TOLLWAY)	L SUM	1				1									
	X7010034	TRAFFIC CONTROL AND PROTECTION, STANDARD 701422 (SPECIAL)	L SUM	1	1												
	X7010805	TRAFFIC CONTROL AND PROTECTION, STANDARD 701401 (SPECIAL)	L SUM	1				1									
	X7040012	TEMPORARY CONCRETE BARRIER (TO REMAIN PERMANENTLY)	FOOT	413				413									
	X7060330	IMPACT ATTENUATORS, TEMPORARY (NON- REDIRECTIVE) TEST LEVEL 3 (TO REMAIN PERMANENTLY)	EACH	2	1	1											
	X7060334	IMPACT ATTENUATORS, TEMPORARY (FULLY REDIRECTIVE, RESETTABLE) TEST LEVEL 3 (TO REMAIN PERMANENTLY)	EACH	1				1									

* SPECIALTY ITEM
\# NON-PARTICIPATING ITEM (100% STATE)
#FR NON-PARTICIPATING ITEM (100% FOUR RIVERS SANITARY)
#CV NON-PARTICIPATING ITEM (100% VILLAGE OF CHERRY VALLEY)

benesch
Alfred Benesch & Company
35 W. Wacker Drive, Suite 3300
Chicago, Illinois 60601
312-565-0150 Job No. 10800.00

USER NAME = JMaJcher	DESIGNED - A.GIBSON	REVISED -	
	DRAWN - N.REYNOLDS	REVISED -	
PLOT SCALE = 0.167 ' / In.	CHECKED - J.TARDY	REVISED -	
PLOT DATE = 12/6/2023	DATE - 10/13/2023	REVISED -	

STATE OF ILLINOIS
DEPARTMENT OF TRANSPORTATION

SUMMARY OF QUANTITIES

SCALE: N/A | SHEET 28 OF 29 SHEETS | STA. | TO STA.

F.A.* RTE.	SECTION	COUNTY	TOTAL SHEETS	SHEET NO.
*	(5)RS & (5&5HB)RC	WINNEBAGO	1279	34
		CONTRACT NO. 64R71		
	ILLINOIS	FED. AID PROJECT		

* FAI ROUTE 39 (I-39) & FAP ROUTE 525 (US 20)

MODEL: Default
FILE NAME: pw:\benesch-pw.bentley.com:benesch-pw-01\Documents\10800\c10800.00\Eng_Docs\CAD_Sheets\General\D2164R71-ODI-sht-SOQ-28.dgn

					US 20 (EAST OF I-39)	HARRISON AVE (WEST OF I-39)	MALL DR	I-39 AND DDI RAMPS	I-39	BIKE PATH	ROADWAY LIGHTING & TEMPORARY TRAFFIC SIGNALS	FIBER	ROADWAY SIGNING		TRAFFIC SIGNALS		
					ROADWAY	ROADWAY	ROADWAY	ROADWAY	ROADWAY	HARRISON AVE	I-39, HARRISON AVE, AND DDI RAMPS	I-39	I-39 AND DDI RAMPS	HARRISON AVE	DDI RAMPS	MALL DR	MALL DR
	CODE NO.	ITEM DESCRIPTION	UNIT	TOTAL QUANTITY	0003	0003	0004	0003	0021	0021	0021	0043	0044	0044	0021	0021	0021
					80% FED 20% STATE	80% FED 20% STATE	80% FED 20% STATE	80% FED 20% STATE	100% TOLLWAY	80% FED 20% STATE	80% FED 20% STATE	100% STATE	80% FED 20% STATE	80% FED 20% STATE	80% FED 20% STATE	80% FED 20% VILLAGE	100% CVFPD
	X7060336	IMPACT ATTENUATORS, TEMPORARY (FULLY REDIRECTIVE, NARROW) TEST LEVEL 3 (TO REMAIN PERMANENTLY)	EACH	1				1									
*	X7200057	TEMPORARY SIGN PANEL OVERLAY	SQ FT	213	90			123									
*	X7200075	REMOVE AND REINSTALL SIGN PANEL	SQ FT	45									37	8			
*	X7210010	SIGN PANEL OVERLAY (SPECIAL)	SQ FT	177									177				
*	X7820007	GUARDRAIL REFLECTORS, TYPE C (SPECIAL)	EACH	12	4			8									
*	X8420510	REMOVAL OF TOWER FOUNDATION	EACH	4							4						
#*	X8500102	MAINTENANCE OF EXISTING FIBER OPTIC CABLE (FOC) NETWORK	MONTH	15								15					
*	X8710031	FIBER OPTIC CABLE 36 FIBERS, SINGLE MODE	FOOT	5,894											5,894		
#*	X8710316	FIBER OPTIC SPLICE - MAINLINE	EACH	9								9					
*	X8760200	ACCESSIBLE PEDESTRIAN SIGNALS	EACH	10											8	2	
#	X8870300	EMERGENCY VEHICLE PRIORITY SYSTEM	EACH	3													3
*	X8900100	TEMPORARY TRAFFIC SIGNAL INSTALLATION (SPECIAL)	EACH	1							1						
#*	X8950510	REMOVE FIBER OPTIC CABLE FROM CONDUIT	FOOT	28,393								28,393					
Ø	Z0076600	TRAINEES	HOUR	4,000	4,000												
Ø	Z0076604	TRAINEES - TRAINING PROGRAM GRADUATE	HOUR	4,000	4,000												

Ø 0042

* SPECIALTY ITEM

\# NON-PARTICIPATING ITEM (100% STATE)

#FR NON-PARTICIPATING ITEM (100% FOUR RIVERS SANITARY)

#CV NON-PARTICIPATING ITEM (100% VILLAGE OF CHERRY VALLEY)

MODEL: Default
FILE NAME: pw:\benesch-pw.bentley.com:benesch-pw-01\Documents\10800s\10800\00\Eng_Docs\CAD_Sheets\General\D2764R71-ODI-sht-SOQ-29.dgn

benesch
Alfred Benesch & Company
35 W. Wacker Drive, Suite 3300
Chicago, Illinois 60601
312-565-0150 Job No. 10800.00

USER NAME = JMaJcher	DESIGNED - A.GIBSON	REVISED -
	DRAWN - N.REYNOLDS	REVISED -
PLOT SCALE = 0.167 ' / In.	CHECKED - J.TARDY	REVISED -
PLOT DATE = 12/6/2023	DATE - 10/13/2023	REVISED -

STATE OF ILLINOIS
DEPARTMENT OF TRANSPORTATION

SUMMARY OF QUANTITIES

SCALE: N/A | SHEET 29 OF 29 SHEETS | STA. | TO STA.

F.A.* RTE.	SECTION	COUNTY	TOTAL SHEETS	SHEET NO.
*	(5)RS & (5&5HB)RC	WINNEBAGO	1279	35
		CONTRACT NO. 64R71		
	ILLINOIS FED. AID PROJECT			

* FAI ROUTE 39 (I-39) & FAP ROUTE 525 (US 20)

REV. 12/11/23

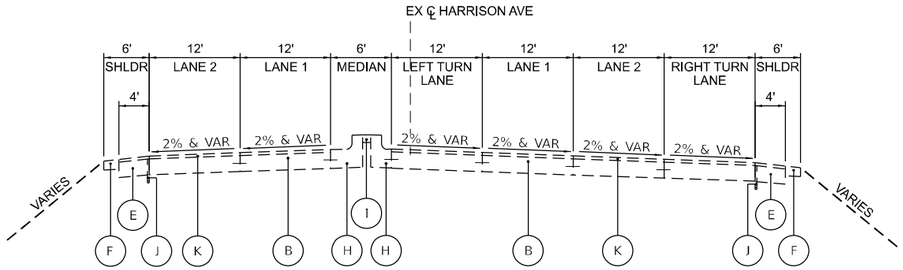

EXISTING TYPICAL SECTION
HARRISON AVE

STA 123+50 TO STA 125+81

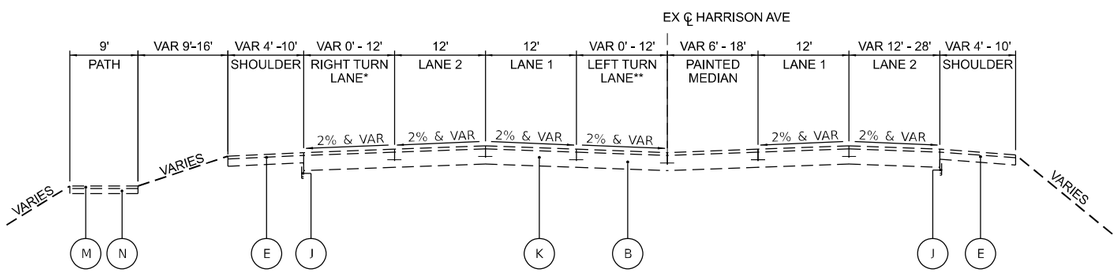

EXISTING TYPICAL SECTION
HARRISON AVE

STA 125+81 TO STA 132+08

*RIGHT TURN LANE LIMITS STA 125+81 TO STA 131+45

**LEFT TURN LANE LIMITS STA 125+81 TO STA 130+26

NOTE:
EXISTING PAVEMENT AND SHOULDER THICKNESSES ARE BASED ON RECORD PLANS. ACTUAL THICKNESSES SHOULD BE FIELD VERIFIED.

LEGEND

- (A) EXISTING 10" PORTLAND CEMENT CONCRETE PAVEMENT
- (B) EXISTING 7" PORTLAND CEMENT CONCRETE PAVEMENT
- (C) EXISTING SUBBASE
- (D) EXISTING 5" HMA OVERLAY
- (E) EXISTING HMA PAVED SHOULDER (THICKNESS VARIES 7"-10")* *CONTRACTOR TO ASSUME 10" DEPTH FOR BIDDING
- (F) EXISTING AGGREGATE SHOULDER
- (G) EXISTING CONCRETE BARRIER AND BASE
- (H) EXISTING CONCRETE CURB & GUTTER
- (I) EXISTING CONCRETE MEDIAN
- (J) EXISTING PIPE UNDERDRAINS
- (K) EXISTING 2.5" HMA OVERLAY
- (L) EXISTING GUARDRAIL
- (M) EXISTING HMA PATH
- (N) EXISTING AGGREGATE

benesch
Alfred Benesch & Company
35 W. Wacker Drive, Suite 3300
Chicago, Illinois 60601
312.565.0450 Job No. 10800.00

USER NAME = JMajcher	DESIGNED - A.GIBSON	REVISED -	
	DRAWN - J.MAJCHER	REVISED -	
PLOT SCALE = 20.000 ' / in.	CHECKED - J.TARDY	REVISED -	
PLOT DATE = 10/11/2023	DATE - 10/13/2023	REVISED -	

STATE OF ILLINOIS
DEPARTMENT OF TRANSPORTATION

EXISTING TYPICAL SECTION HARRISON AVE

SCALE: N/A | SHEET 1 OF 5 SHEETS | STA. | TO STA.

F.A.* RTE.	SECTION	COUNTY	TOTAL SHEETS	SHEET NO.
*	(5)RS & (5&5HB)RC	WINNEBAGO	1279	36
		CONTRACT NO. 64R71		
	ILLINOIS FED. AID PROJECT			

* FAI ROUTE 39 (I-39) & FAP ROUTE 525 (US 20)

MODEL: Default
FILE NAME: pw://benesch-pw.bentley.com:benesch-pw-03\Documents\10800s\10800.00\Eng. Docs\CAD Sheets\Roadway\Typical Sections\D264871-D01-ent-ExTypSect-000.dgn

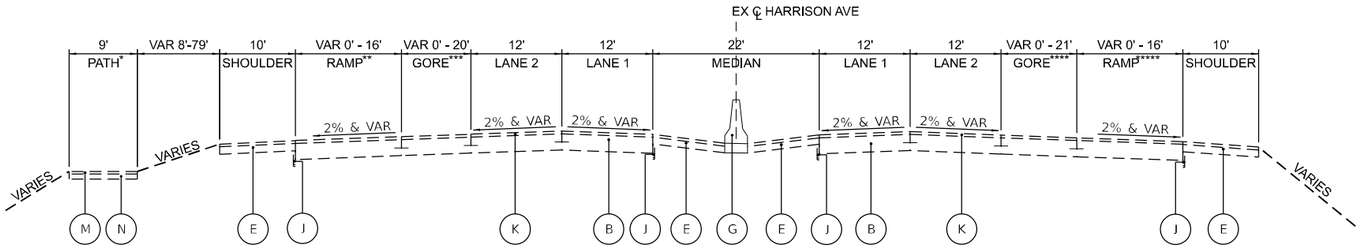

EXISTING TYPICAL SECTION
HARRISON AVE

STA 132+08 TO STA 149+24
*PATH LIMITS STA 132+08 TO STA 140+35
**RAMP LIMITS STA 138+41 TO STA 144+21
***GORE LIMITS STA 142+42 TO STA 144+21
****GORE LIMITS STA 139+71 TO STA 143+24
*****RAMP LIMITS STA 136+95 TO STA 143+24

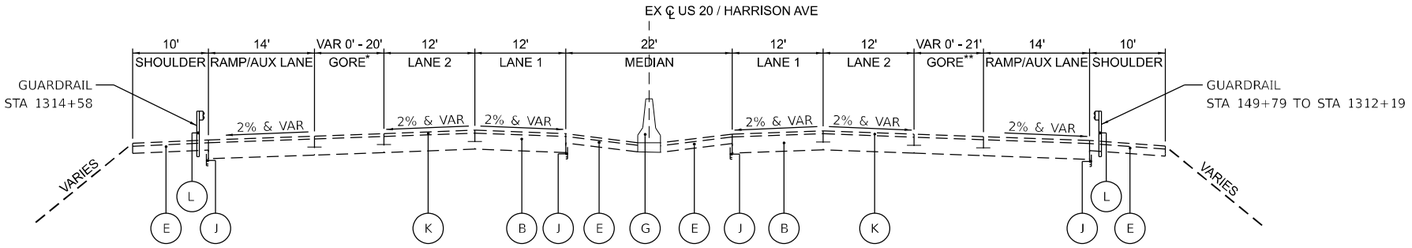

EXISTING TYPICAL SECTION
US 20 / HARRISON AVE

STA 149+24 TO STA 1315+14
*GORE LIMITS STA 149+24 TO STA 150+79 AND STA 1312+68 TO STA 1314+80
**GORE LIMITS STA 149+62 TO STA 152+14 AND STA 1312+94 TO STA 1315+14

NOTE:
EXISTING PAVEMENT AND SHOULDER THICKNESSES ARE BASED ON RECORD PLANS. ACTUAL THICKNESSES SHOULD BE FIELD VERIFIED.

LEGEND

- (A) EXISTING 10" PORTLAND CEMENT CONCRETE PAVEMENT
- (B) EXISTING 7" PORTLAND CEMENT CONCRETE PAVEMENT
- (C) EXISTING SUBBASE
- (D) EXISTING 5" HMA OVERLAY
- (E) EXISTING HMA PAVED SHOULDER (THICKNESS VARIES 7"-10")*
  *CONTRACTOR TO ASSUME 10" DEPTH FOR BIDDING
- (F) EXISTING AGGREGATE SHOULDER
- (G) EXISTING CONCRETE BARRIER AND BASE
- (H) EXISTING CONCRETE CURB & GUTTER
- (I) EXISTING CONCRETE MEDIAN
- (J) EXISTING PIPE UNDERDRAINS
- (K) EXISTING 2.5" HMA OVERLAY
- (L) EXISTING GUARDRAIL
- (M) EXISTING HMA PATH
- (N) EXISTING AGGREGATE

MODEL: Default
FILE NAME: pw://benesch-pw.bentley.com:benesch-pw-01/Documents/108006/10800600/Eng_Docs/CAD Sheets/Roadway/Typical Sections/D264R71-ODH-sht-EXTypSect-001.dgn

benesch
Allied Benesch & Company
35 W. Wacker Drive, Suite 3300
Chicago, Illinois 60601
312-565-0450 Job No. 10800.00

USER NAME = JMajcher	DESIGNED - A.GIBSON	REVISED -
	DRAWN - J.MAJCHER	REVISED -
PLOT SCALE = 20.000 ' / in.	CHECKED - J.TARDY	REVISED -
PLOT DATE = 10/11/2023	DATE - 10/13/2023	REVISED -

STATE OF ILLINOIS
DEPARTMENT OF TRANSPORTATION

EXISTING TYPICAL SECTION
HARRISON AVE

SCALE: N/A | SHEET 2 OF 5 SHEETS | STA. | TO STA.

F.A.* RTE.	SECTION	COUNTY	TOTAL SHEETS	SHEET NO.
*	(5)RS & (5&5HB)RC	WINNEBAGO	1279	37
		CONTRACT NO. 64R71		
	ILLINOIS FED. AID PROJECT			

* FAI ROUTE 39 (I-39) & FAP ROUTE 525 (US 20)

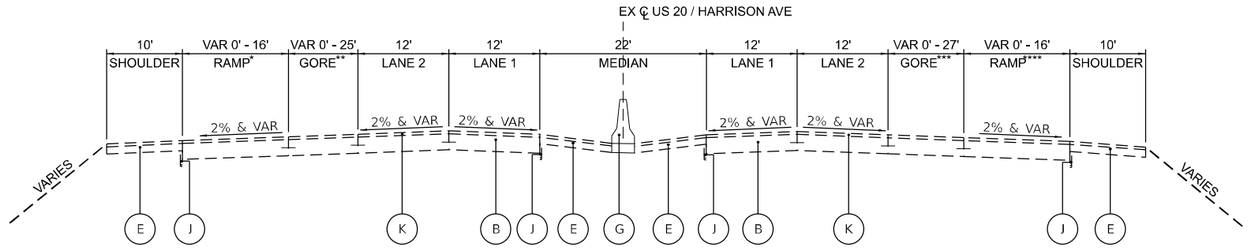

EXISTING TYPICAL SECTION
US 20 / HARRISON AVE

STA 1315+14 TO STA 1333+44.23
*RAMP LIMITS STA 1325+50 TO STA 1332+77
**GORE LIMITS STA 1325+50 TO STA 1329+65
***GORE LIMITS STA 1321+46 TO STA 1324+47
****RAMP LIMITS STA 1321+46 TO STA 1330+95

LEGEND

- (A) EXISTING 10" PORTLAND CEMENT CONCRETE PAVEMENT
- (B) EXISTING 7" PORTLAND CEMENT CONCRETE PAVEMENT
- (C) EXISTING SUBBASE
- (D) EXISTING 5" HMA OVERLAY
- (E) EXISTING HMA PAVED SHOULDER (THICKNESS VARIES 7"-10")* *CONTRACTOR TO ASSUME 10" DEPTH FOR BIDDING
- (F) EXISTING AGGREGATE SHOULDER
- (G) EXISTING CONCRETE BARRIER AND BASE
- (H) EXISTING CONCRETE CURB & GUTTER
- (I) EXISTING CONCRETE MEDIAN
- (J) EXISTING PIPE UNDERDRAINS
- (K) EXISTING 2.5" HMA OVERLAY
- (L) EXISTING GUARDRAIL
- (M) EXISTING HMA PATH
- (N) EXISTING AGGREGATE

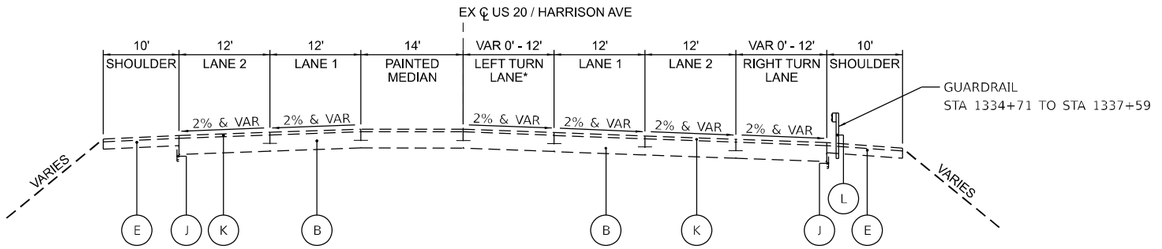

EXISTING TYPICAL SECTION
US 20 / HARRISON AVE

STA 1333+44.23 TO STA 1338+00
*LEFT TURN LANE LIMITS STA 1334+49 TO STA 1338+00

NOTE:
EXISTING PAVEMENT AND SHOULDER THICKNESSES ARE BASED ON RECORD PLANS. ACTUAL THICKNESSES SHOULD BE FIELD VERIFIED.

MODEL: Default
FILE NAME: pw://benesch-pw.bentley.com:benesch-pw-01/Documents/10800s/10800.00/Eng_Docs/CAD Sheets/Roadway/Typical Sections/D264R71-ODI-sht-EXTypSect-002.dgn

benesch
Allfred Benesch & Company
35 W. Wacker Drive, Suite 3300
Chicago, Illinois 60601
312-565-0450 Job No. 10800.00

USER NAME = JMajcher	DESIGNED - A.GIBSON	REVISED -
	DRAWN - J.MAJCHER	REVISED -
PLOT SCALE = 20.000 ' / in.	CHECKED - J.TARDY	REVISED -
PLOT DATE = 10/11/2023	DATE - 10/13/2023	REVISED -

STATE OF ILLINOIS
DEPARTMENT OF TRANSPORTATION

EXISTING TYPICAL SECTION
US 20 / HARRISON AVE

SCALE: N/A | SHEET 3 OF 5 SHEETS | STA. | TO STA.

F.A.* RTE.	SECTION	COUNTY	TOTAL SHEETS	SHEET NO.
*	(5)RS & (5&5HB)RC	WINNEBAGO	1279	38
		CONTRACT NO. 64R71		
	ILLINOIS	FED. AID PROJECT		

* FAI ROUTE 39 (I-39) & FAP ROUTE 525 (US 20)

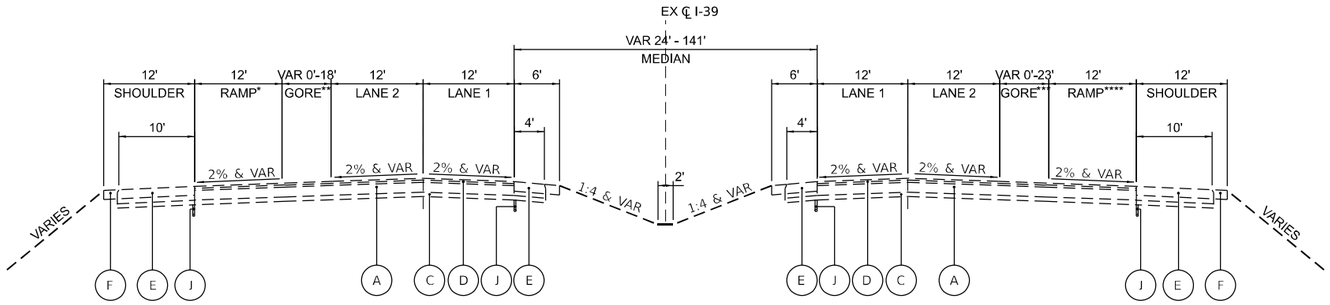

EXISTING TYPICAL SECTION
I–39

NB STA 2734+46 TO STA 2743+99
SB STA 2732+47 TO STA 2745+97
*RAMP LIMITS STA 2734+52 TO STA 2743+54
**GORE LIMITS STA 2734+52 TO STA 2739+39
***GORE LIMITS STA 2735+84 TO STA 2741+10
****RAMP LIMITS STA 2735+84 TO STA 2743+99

LEGEND

- (A) EXISTING 10" PORTLAND CEMENT CONCRETE PAVEMENT
- (B) EXISTING 7" PORTLAND CEMENT CONCRETE PAVEMENT
- (C) EXISTING SUBBASE
- (D) EXISTING 5" HMA OVERLAY
- (E) EXISTING HMA PAVED SHOULDER (THICKNESS VARIES 7"-10")*
  *CONTRACTOR TO ASSUME 10" DEPTH FOR BIDDING
- (F) EXISTING AGGREGATE SHOULDER
- (G) EXISTING CONCRETE BARRIER AND BASE
- (H) EXISTING CONCRETE CURB & GUTTER
- (I) EXISTING CONCRETE MEDIAN
- (J) EXISTING PIPE UNDERDRAINS
- (K) EXISTING 2.5" HMA OVERLAY
- (L) EXISTING GUARDRAIL
- (M) EXISTING HMA PATH
- (N) EXISTING AGGREGATE

EXISTING TYPICAL SECTION
CLOVER LEAF RAMPS

RAMP AD STA 7+74 TO STA 25+61
RAMP BC STA 9+08 TO STA 23+30
RAMP CA STA 6+05 TO STA 19+23
RAMP DB STA 7+20 TO STA 22+38

EXISTING TYPICAL SECTION
DIRECTIONAL RAMPS

RAMP AC STA 4+75 TO STA 12+48
RAMP BD STA 4+64 TO STA 12+15
RAMP CB STA 4+06 TO STA 16+78
RAMP DA STA 4+04 TO STA 15+31

NOTE:
EXISTING PAVEMENT AND SHOULDER THICKNESSES ARE BASED ON RECORD PLANS. ACTUAL THICKNESSES SHOULD BE FIELD VERIFIED.

MODEL: Default
FILE NAME: pw:\\benesch-pw.bentley.com:benesch-pw-01\Documents\108006\10800\10800.00\Eng. Docs\CAD Sheets\Roadway\Typical Sections\D764871-00N.stm-ExTypSect-003.dgn

benesch
Allfred Benesch & Company
35 W. Wacker Drive, Suite 3300
Chicago, Illinois 60601
312.565.0450 Job No. 10800.00

USER NAME = JMajcher	DESIGNED - A.GIBSON	REVISED -
	DRAWN - J.MAJCHER	REVISED -
PLOT SCALE = 20.000 ' / in.	CHECKED - J.TARDY	REVISED -
PLOT DATE = 10/11/2023	DATE - 10/13/2023	REVISED -

STATE OF ILLINOIS
DEPARTMENT OF TRANSPORTATION

EXISTING TYPICAL SECTION
I-39 AND RAMPS

SCALE: N/A | SHEET 4 OF 5 SHEETS | STA. | TO STA.

F.A.* RTE.	SECTION	COUNTY	TOTAL SHEETS	SHEET NO.
*	(5)RS & (5&5HB)RC	WINNEBAGO	1279	39
		CONTRACT NO. 64R71		
	ILLINOIS	FED. AID PROJECT		

* FAI ROUTE 39 (I-39) & FAP ROUTE 525 (US 20)

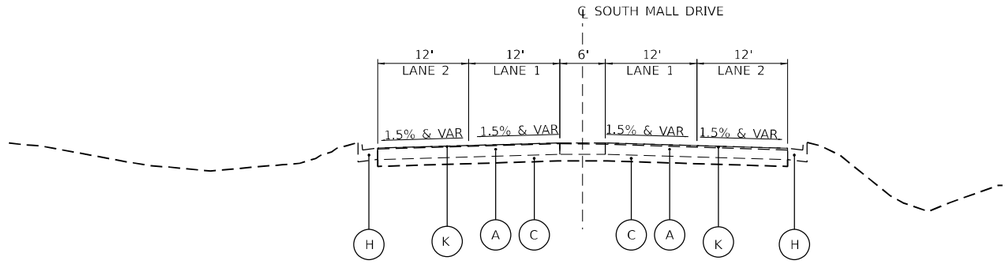

EXISTING TYPICAL SECTION
SOUTH MALL DRIVE

STA 297+43 TO STA 299+60

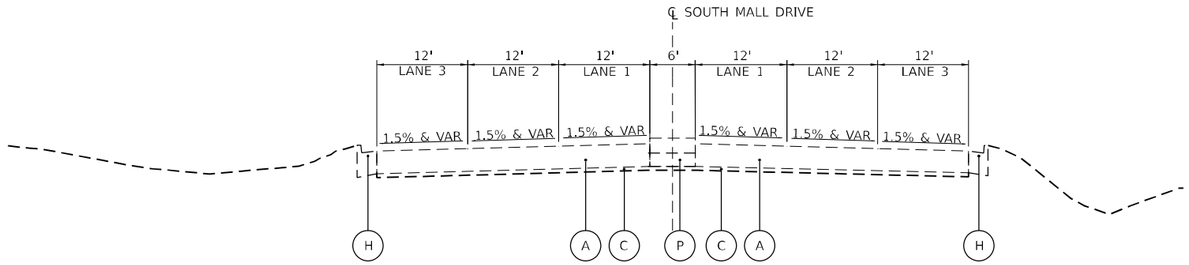

EXISTING TYPICAL SECTION
SOUTH MALL DRIVE

STA 300+19 TO STA 303+37

LEGEND

- (A) EXISTING 10" PORTLAND CEMENT CONCRETE PAVEMENT
- (B) EXISTING 7" PORTLAND CEMENT CONCRETE PAVEMENT
- (C) EXISTING SUBBASE
- (D) EXISTING 5" HMA OVERLAY
- (E) EXISTING HMA PAVED SHOULDER (THICKNESS VARIES 7"-10")* *CONTRACTOR TO ASSUME 10" DEPTH FOR BIDDING
- (F) EXISTING AGGREGATE SHOULDER
- (G) EXISTING CONCRETE BARRIER AND BASE
- (H) EXISTING CONCRETE CURB & GUTTER
- (I) EXISTING CONCRETE MEDIAN
- (J) EXISTING PIPE UNDERDRAINS
- (K) EXISTING 2.5" HMA OVERLAY
- (L) EXISTING GUARDRAIL
- (M) EXISTING HMA PATH
- (N) EXISTING AGGREGATE
- (P) EXISTING ISLAND

NOTE:
EXISTING PAVEMENT AND SHOULDER THICKNESSES ARE BASED ON RECORD PLANS. ACTUAL THICKNESSES SHOULD BE FIELD VERIFIED.

MODEL: Default
FILE NAME: pw://benesch-pw.bentley.com:benesch-pw-01/Documents/10800s/10800.00/Eng_Docs/CAD_Sheets/Roadway/Typical_Sections/Local_Roads [WHA]/D264R71-Sht-TypicalMall.dgn

WILLETT HOFMANN & ASSOCIATES, INC. ENGINEERING ARCHITECTURE LAND SURVEYING 800 EAST 24TH STREET, DUNDEE, IL 61621-0367 T: 815-284-3381 DESIGN FIRM #184-000918	USER NAME = cmorgan	DESIGNED - CMM	REVISED -
		DRAWN - CMM	REVISED -
	PLOT SCALE = 20.001 ' / in.	CHECKED - GFS	REVISED -
	PLOT DATE = 10/12/2023	DATE - 10/13/2023	REVISED -

STATE OF ILLINOIS
DEPARTMENT OF TRANSPORTATION

EXISTING TYPICAL SECTION
SOUTH MALL DR

SCALE: N/A | SHEET 5 OF 5 SHEETS | STA. | TO STA.

F.A.* RTE.	SECTION	COUNTY	TOTAL SHEETS	SHEET NO.
*	(5)RS & (5&5HB)RC	WINNEBAGO	1279	40
		CONTRACT NO. 64R71		
		ILLINOIS	FED. AID PROJECT	

* FAI ROUTE 39 (I-39) & FAP ROUTE 525 (US 20)

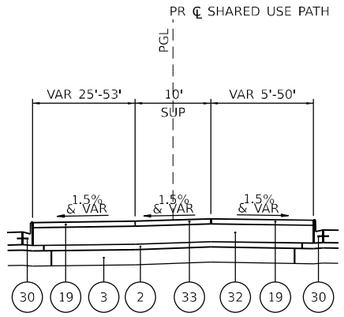

DDI ISLAND DETAIL

STA 508+77 TO STA 509+92
STA 518+37 TO STA 519+86

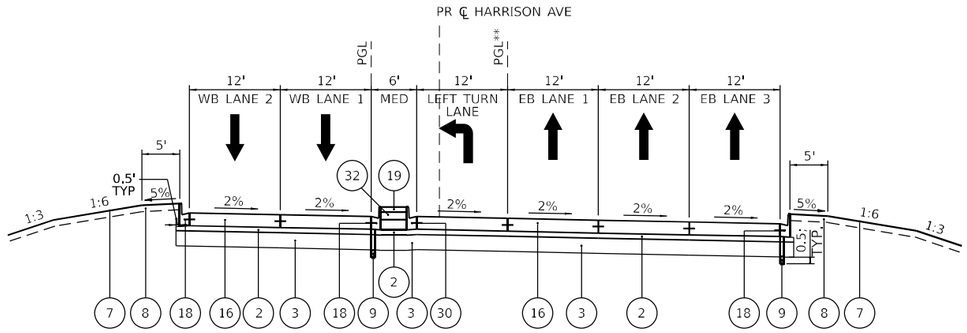

PROPOSED TYPICAL SECTION

HARRISON AVE

STA 123+50 TO STA 126+00

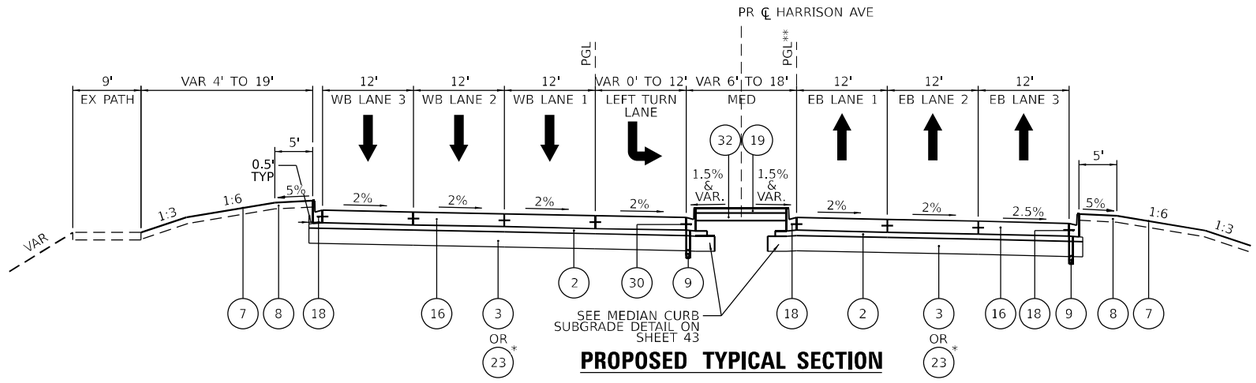

PROPOSED TYPICAL SECTION

HARRISON AVE

STA 126+00 TO STA 133+43
*STA 129+75 TO STA 130+75

**PGL ELEVATIONS DIFFER FROM THEORETICAL GRADE LINE ON EB FROM STA 124+27.79 TO STA 127+78.00. SEE INTERSECTION DETAILS FOR MORE INFORMATION ON GRADES AT MALL DR.

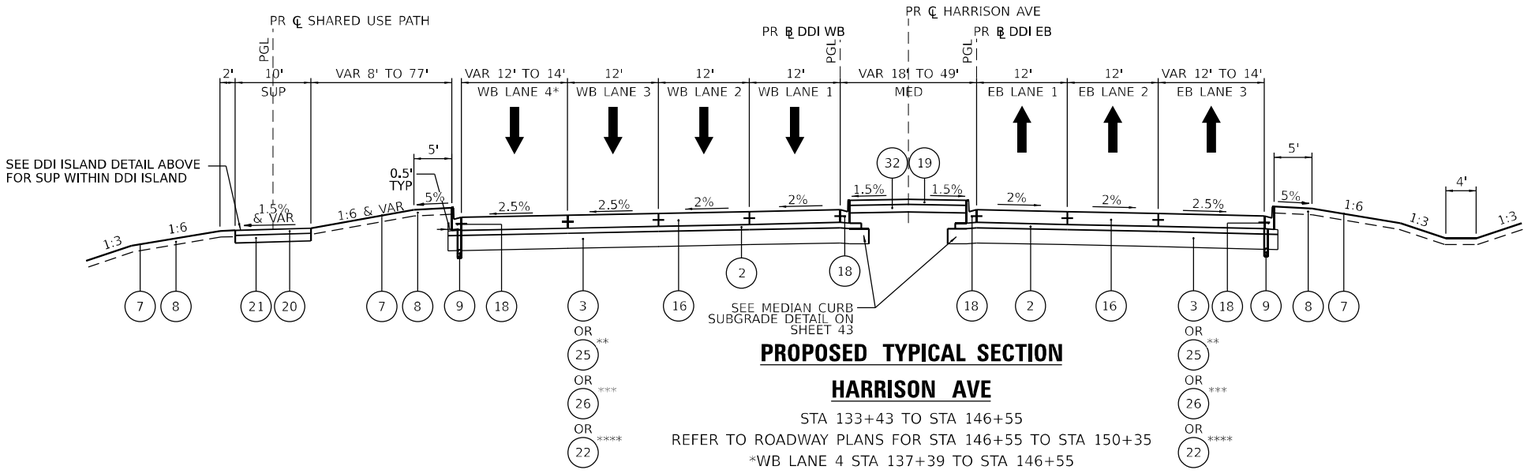

PROPOSED TYPICAL SECTION

HARRISON AVE

STA 133+43 TO STA 146+55
REFER TO ROADWAY PLANS FOR STA 146+55 TO STA 150+35
*WB LANE 4 STA 137+39 TO STA 146+55
**STA 134+75 TO STA 135+75 AND STA 144+75 TO 145+75
***STA 140+75 TO STA 142+75
****STA 145+75 TO STA 150+25

LEGEND

1. CONTINUOUSLY REINFORCED PORTLAND CEMENT CONCRETE PAVEMENT 12 1/2"
2. STABILIZED SUBBASE - HOT-MIX ASPHALT, 4"
3. AGGREGATE SUBGRADE IMPROVEMENT, 12"
4. PORTLAND CEMENT CONCRETE SHOULDERS, 12 1/2"
5. AGGREGATE SHOULDERS, TYPE A
6. CONCRETE BARRIER, DOUBLE FACE, 44" HEIGHT
7. SEEDING (SEE NOTE 5)
8. 4" OF TOPSOIL
9. PIPE UNDERDRAINS 6"
10. CONCRETE BARRIER BASE
11. SHOULDER SUBBASE - CA 6 or CA 10, 4" (INCLUDED IN COST OF PCC SHOULDER)
12. GEOTECHNICAL REINFORCEMENT
13. AGGREGATE SUBGRADE IMPROVEMENT 12" (SPECIAL)
14. HOT-MIX ASPHALT SHOULDERS, 6"
15. AGGREGATE SHOULDERS, TYPE B 4"
16. PORTLAND CEMENT CONCRETE PAVEMENT 10 1/4" (JOINTED)
17. PORTLAND CEMENT CONCRETE SHOULDERS, 10 1/4"
18. COMBINATION CONCRETE CURB & GUTTER, TYPE B-6.24
19. CONCRETE MEDIAN SURFACE, 4 INCH
20. 4" HOT-MIX ASPHALT SURFACE COURSE, MIX "D", IL-9.5, N50
21. AGGREGATE BASE COURSE, TYPE A 6"
22. AGGREGATE SUBGRADE IMPROVEMENT, 18"
23. AGGREGATE SUBGRADE IMPROVEMENT, 21"
24. AGGREGATE SUBGRADE IMPROVEMENT, 24"
25. AGGREGATE SUBGRADE IMPROVEMENT, 30"
26. AGGREGATE SUBGRADE IMPROVEMENT, 36"
27. HOT-MIX ASPHALT PAVEMENT (FULL DEPTH), 13 1/2"
28. NOT USED
29. SHOULDER RUMBLE STRIPS, 16 INCH
30. COMBINATION CONCRETE CURB & GUTTER, TYPE B-6.06
31. 2" HOT-MIX ASPHALT SURFACE COURSE, MIX "D", IL-9.5, N70
32. SUBBASE GRANULAR MATERIAL, TYPE B 6"
33. PORTLAND CEMENT CONCRETE SIDEWALK 5 INCH
34. CONCRETE MEDIAN, TYPE SB-6.18

NOTES

1. SEE HOT-MIX ASPHALT MIXTURE REQUIREMENTS TABLE FOR MIXTURE DESIGN.
2. FOR SUPERELEVATION TRANSITIONS, SEE ROADWAY DETAIL SHEETS.
3. SEE DRAINAGE PLANS FOR LOCATIONS OF PIPE UNDERDRAINS.
4. SEE CROSS SECTIONS FOR SIDE SLOPE AND DITCH DETAILS.
5. SEE LANDSCAPING PLANS FOR SEEDING TYPES AND LOCATIONS.
6. PER HIGHWAY STANDARDS 421201 AND 420206, THE CONTRACTOR SHALL PAVE THE 4" STABILIZED SUBBASE 18" WIDER THAN THE EDGE OF PAVEMENT. THE ADDITIONAL WIDTH SHALL BE REMOVED AND REPLACED WITH CA6 OR CA8 STONE. REMOVAL OF STABILIZED SUBBASE WILL NOT BE MEASURED FOR PAYMENT AND IS INCLUDED IN THE ITEM STABILIZED SUBBASE - HOT-MIX ASPHALT, 4".

MODEL: Default
FILE NAME: pw:\benesch-pw.bentley.com:benesch-pw-011\Documents\108000s\108000\00\Eng. Docs\CAD Sheets\Roadway\Typical Sections\D264871-DDI-sht-PrTypSect-004.dgn

benesch
Alfred Benesch & Company
35 W. Wacker Drive, Suite 3300
Chicago, Illinois 60601
312-565-0150 Job No. 108000.00

USER NAME = agibson	DESIGNED - A.GIBSON	REVISED -	
	DRAWN - J.MAJCHER	REVISED -	
PLOT SCALE = 20.000 ' / in.	CHECKED - J.TARDY	REVISED -	
PLOT DATE = 10/26/2023	DATE - 10/13/2023	REVISED -	

STATE OF ILLINOIS
DEPARTMENT OF TRANSPORTATION

PROPOSED TYPICAL SECTION
HARRISON AVE

SCALE: N/A | SHEET 1 OF 8 SHEETS | STA. | TO STA.

F.A.* RTE.	SECTION	COUNTY	TOTAL SHEETS	SHEET NO.
*	(5)RS & (5&5HB)RC	WINNEBAGO	1279	41
		CONTRACT NO. 64R71		
	ILLINOIS	FED. AID PROJECT		

* FAI ROUTE 39 (I-39) & FAP ROUTE 525 (US 20)

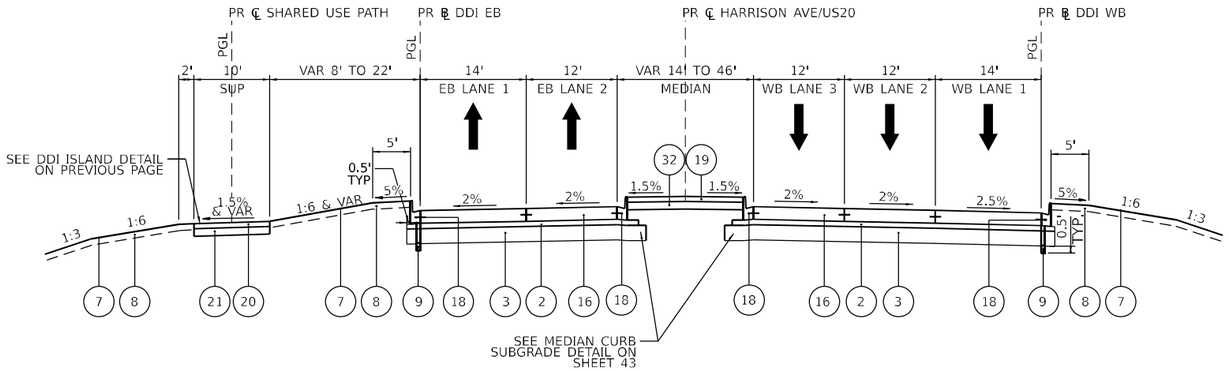

PROPOSED TYPICAL SECTION

HARRISON AVE / US 20 THROUGH I–39 INTERCHANGE

STA 150+35 TO STA 151+35
STA 1312+78 TO 1313+25
REFER TO ROADWAY PLANS FOR STA 146+55 TO STA 150+35, STA 152+34 TO STA 1312+09, AND STA 1313+25 TO STA 1318+89
(SEE JOINTING PLANS FOR DDI CROSSOVER DETAILS)

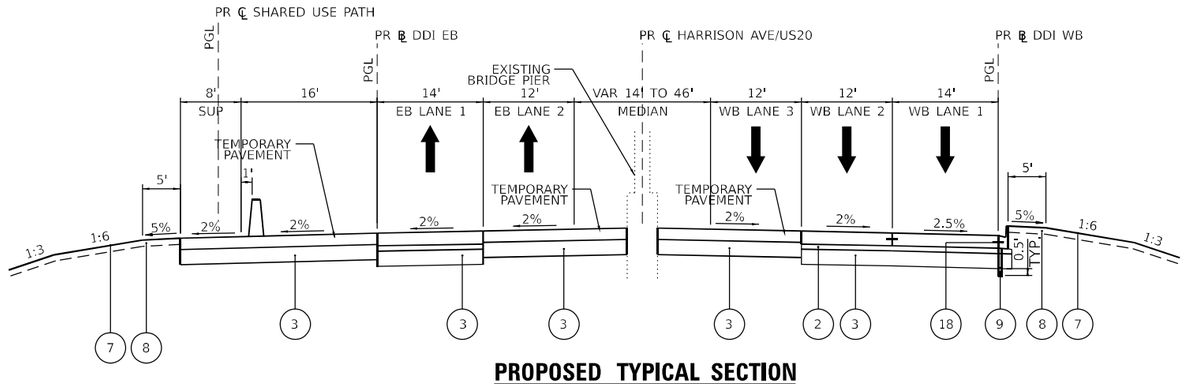

PROPOSED TYPICAL SECTION

HARRISON AVE / US 20 THROUGH I–39 INTERCHANGE

STA 151+35 TO STA 1312+78

LEGEND

1. CONTINUOUSLY REINFORCED PORTLAND CEMENT CONCRETE PAVEMENT 12 1/2"
2. STABILIZED SUBBASE - HOT-MIX ASPHALT, 4"
3. AGGREGATE SUBGRADE IMPROVEMENT, 12"
4. PORTLAND CEMENT CONCRETE SHOULDERS, 12 1/2"
5. AGGREGATE SHOULDERS, TYPE A
6. CONCRETE BARRIER, DOUBLE FACE, 44" HEIGHT
7. SEEDING (SEE NOTE 5)
8. 4" OF TOPSOIL
9. PIPE UNDERDRAINS 6"
10. CONCRETE BARRIER BASE
11. SHOULDER SUBBASE - CA 6 or CA 10, 4" (INCLUDED IN COST OF PCC SHOULDER)
12. GEOTECHNICAL REINFORCEMENT
13. AGGREGATE SUBGRADE IMPROVEMENT 12" (SPECIAL)
14. HOT-MIX ASPHALT SHOULDERS, 6"
15. AGGREGATE SHOULDERS, TYPE B 4"
16. PORTLAND CEMENT CONCRETE PAVEMENT 10 1/4" (JOINTED)
17. PORTLAND CEMENT CONCRETE SHOULDERS, 10 1/4"
18. COMBINATION CONCRETE CURB & GUTTER, TYPE B-6.24
19. CONCRETE MEDIAN SURFACE, 4 INCH
20. 4" HOT-MIX ASPHALT SURFACE COURSE, MIX "D", IL-9.5, N50
21. AGGREGATE BASE COURSE, TYPE A 6"
22. AGGREGATE SUBGRADE IMPROVEMENT, 18"
23. AGGREGATE SUBGRADE IMPROVEMENT, 21"
24. AGGREGATE SUBGRADE IMPROVEMENT, 24"
25. AGGREGATE SUBGRADE IMPROVEMENT, 30"
26. AGGREGATE SUBGRADE IMPROVEMENT, 36"
27. HOT-MIX ASPHALT PAVEMENT (FULL DEPTH), 13 1/2"
28. NOT USED
29. SHOULDER RUMBLE STRIPS, 16 INCH
30. COMBINATION CONCRETE CURB & GUTTER, TYPE B-6.06
31. 2" HOT-MIX ASPHALT SURFACE COURSE, MIX "D", IL-9.5, N70
32. SUBBASE GRANULAR MATERIAL, TYPE B 6"
33. PORTLAND CEMENT CONCRETE SIDEWALK 5 INCH
34. CONCRETE MEDIAN, TYPE SB-6.18

NOTES

1. SEE HOT-MIX ASPHALT MIXTURE REQUIREMENTS TABLE FOR MIXTURE DESIGN.
2. FOR SUPERELEVATION TRANSITIONS, SEE ROADWAY DETAIL SHEETS.
3. SEE DRAINAGE PLANS FOR LOCATIONS OF PIPE UNDERDRAINS.
4. SEE CROSS SECTIONS FOR SIDE SLOPE AND DITCH DETAILS.
5. SEE LANDSCAPING PLANS FOR SEEDING TYPES AND LOCATIONS.
6. PER HIGHWAY STANDARDS 421201 AND 420206, THE CONTRACTOR SHALL PAVE THE 4" STABILIZED SUBBASE 18" WIDER THAN THE EDGE OF PAVEMENT. THE ADDITIONAL WIDTH SHALL BE REMOVED AND REPLACED WITH CA6 OR CA8 STONE. REMOVAL OF STABILIZED SUBBASE WILL NOT BE MEASURED FOR PAYMENT AND IS INCLUDED IN THE ITEM STABILIZED SUBBASE - HOT-MIX ASPHALT, 4".

MODEL: Default
FILE NAME: pw:\benesch-pw.bentley.com:benesch-pw-01\Documents\10800s\10800s\10800.00\Eng Docs\CAD Sheets\Roadway\Typical Sections\D264R71-DDI-sht-PrTypSect-005.dgn

benesch
Alfred Benesch & Company
35 W. Wacker Drive, Suite 3300
Chicago, Illinois 60601
312-565-0150 Job No. 10800.00

USER NAME = agibson	DESIGNED - A.GIBSON	REVISED -	
	DRAWN - J.MAJCHER	REVISED -	
PLOT SCALE = 20.000 ' / In.	CHECKED - J.TARDY	REVISED -	
PLOT DATE = 10/26/2023	DATE - 10/13/2023	REVISED -	

STATE OF ILLINOIS
DEPARTMENT OF TRANSPORTATION

PROPOSED TYPICAL SECTION
HARRISON AVE AND US 20

SCALE: N/A | SHEET 2 OF 8 SHEETS | STA. TO STA.

F.A.* RTE.	SECTION	COUNTY	TOTAL SHEETS	SHEET NO.
*	(5)RS & (5&5HB)RC	WINNEBAGO	1279	42
		CONTRACT NO. 64R71		
	ILLINOIS	FED. AID PROJECT		

* FAI ROUTE 39 (I-39) & FAP ROUTE 525 (US 20)

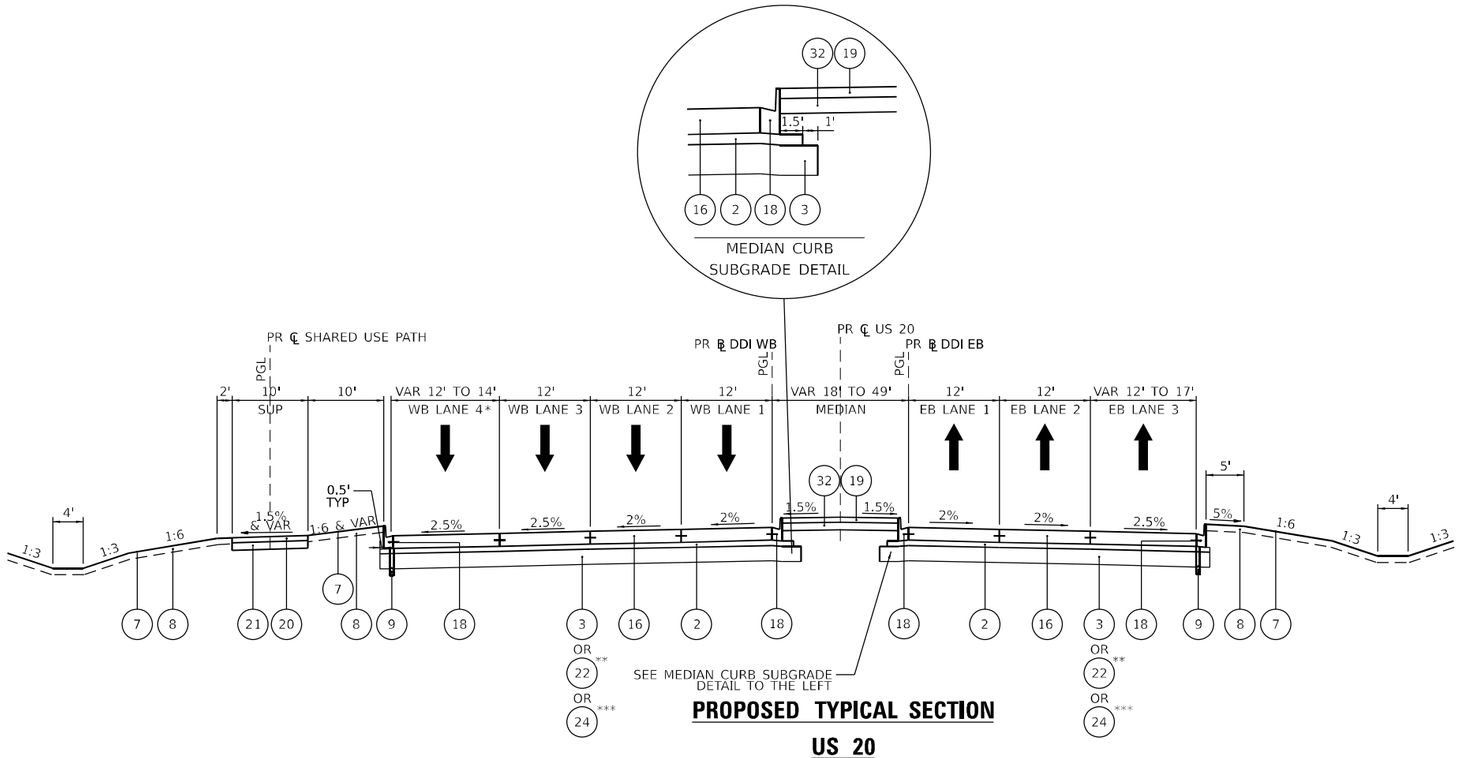

PROPOSED TYPICAL SECTION

US 20

STA 1318+89 TO STA 1332+19
*WB LANE STA 1318+89 TO STA 1322+81
**STA 1322+80 TO STA 1326+80
***STA 1326+80 TO STA 1330+80

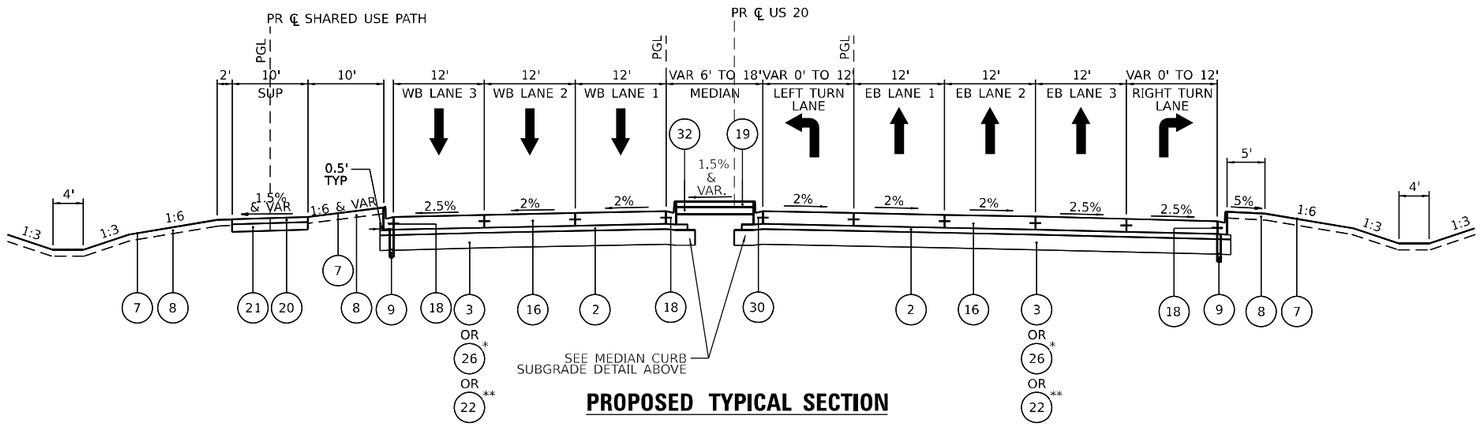

PROPOSED TYPICAL SECTION

US 20

STA 1332+19 TO STA 1337+00
*STA 1333+80 TO STA 1338+80
**STA 1342+80 TO STA 1346+30

LEGEND

1. CONTINUOUSLY REINFORCED PORTLAND CEMENT CONCRETE PAVEMENT 12 1/2"
2. STABILIZED SUBBASE - HOT-MIX ASPHALT, 4"
3. AGGREGATE SUBGRADE IMPROVEMENT, 12"
4. PORTLAND CEMENT CONCRETE SHOULDERS, 12 1/2"
5. AGGREGATE SHOULDERS, TYPE A
6. CONCRETE BARRIER, DOUBLE FACE, 44" HEIGHT
7. SEEDING (SEE NOTE 5)
8. 4" OF TOPSOIL
9. PIPE UNDERDRAINS 6"
10. CONCRETE BARRIER BASE
11. SHOULDER SUBBASE - CA 6 or CA 10, 4" (INCLUDED IN COST OF PCC SHOULDER)
12. GEOTECHNICAL REINFORCEMENT
13. AGGREGATE SUBGRADE IMPROVEMENT 12" (SPECIAL)
14. HOT-MIX ASPHALT SHOULDERS, 6"
15. AGGREGATE SHOULDERS, TYPE B 4"
16. PORTLAND CEMENT CONCRETE PAVEMENT 10 1/4" (JOINTED)
17. PORTLAND CEMENT CONCRETE SHOULDERS, 10 1/4"
18. COMBINATION CONCRETE CURB & GUTTER, TYPE B-6.24
19. CONCRETE MEDIAN SURFACE, 4 INCH
20. 4" HOT-MIX ASPHALT SURFACE COURSE, MIX "D", IL-9.5, N50
21. AGGREGATE BASE COURSE, TYPE A 6"
22. AGGREGATE SUBGRADE IMPROVEMENT, 18"
23. AGGREGATE SUBGRADE IMPROVEMENT, 21"
24. AGGREGATE SUBGRADE IMPROVEMENT, 24"
25. AGGREGATE SUBGRADE IMPROVEMENT, 30"
26. AGGREGATE SUBGRADE IMPROVEMENT, 36"
27. HOT-MIX ASPHALT PAVEMENT (FULL DEPTH), 13 1/2"
28. NOT USED
29. SHOULDER RUMBLE STRIPS, 16 INCH
30. COMBINATION CONCRETE CURB & GUTTER, TYPE B-6.06
31. 2" HOT-MIX ASPHALT SURFACE COURSE, MIX "D", IL-9.5, N70
32. SUBBASE GRANULAR MATERIAL, TYPE B 6"
33. PORTLAND CEMENT CONCRETE SIDEWALK 5 INCH
34. CONCRETE MEDIAN, TYPE SB-6.18

NOTES

1. SEE HOT-MIX ASPHALT MIXTURE REQUIREMENTS TABLE FOR MIXTURE DESIGN.
2. FOR SUPERELEVATION TRANSITIONS, SEE ROADWAY DETAIL SHEETS.
3. SEE DRAINAGE PLANS FOR LOCATIONS OF PIPE UNDERDRAINS.
4. SEE CROSS SECTIONS FOR SIDE SLOPE AND DITCH DETAILS.
5. SEE LANDSCAPING PLANS FOR SEEDING TYPES AND LOCATIONS.
6. PER HIGHWAY STANDARDS 421201 AND 420206, THE CONTRACTOR SHALL PAVE THE 4" STABILIZED SUBBASE 18" WIDER THAN THE EDGE OF PAVEMENT. THE ADDITIONAL WIDTH SHALL BE REMOVED AND REPLACED WITH CA6 OR CA8 STONE. REMOVAL OF STABILIZED SUBBASE WILL NOT BE MEASURED FOR PAYMENT AND IS INCLUDED IN THE ITEM STABILIZED SUBBASE - HOT-MIX ASPHALT, 4".

MODEL: Default
FILE NAME: pw://benesch-pw.bentley.com:benesch-pw-01/Documents/10800s/10800.00/Eng Docs/CAD Sheets/Roadway/Typical Sections/D264R71-DD4-sht-PrTypSect-006.dgn

benesch
Alfred Benesch & Company
35 W. Wacker Drive, Suite 3300
Chicago, Illinois 60601
312-565-0450 Job No. 10800.00

USER NAME = agibson		DESIGNED - A.GIBSON		REVISED -	
		DRAWN - J.MAJCHER		REVISED -	
PLOT SCALE = 20.000 ' / in.		CHECKED - J.TARDY		REVISED -	
PLOT DATE = 10/26/2023		DATE - 10/13/2023		REVISED -	

STATE OF ILLINOIS
DEPARTMENT OF TRANSPORTATION

PROPOSED TYPICAL SECTION
HARRISON AVE AND US 20

SCALE: N/A | SHEET 3 OF 8 SHEETS | STA. | TO STA.

F.A.* RTE.	SECTION	COUNTY	TOTAL SHEETS	SHEET NO.
*	(5)RS & (5&5HB)RC	WINNEBAGO	1279	43
		CONTRACT NO. 64R71		
	ILLINOIS	FED. AID PROJECT		

* FAI ROUTE 39 (I-39) & FAP ROUTE 525 (US 20)

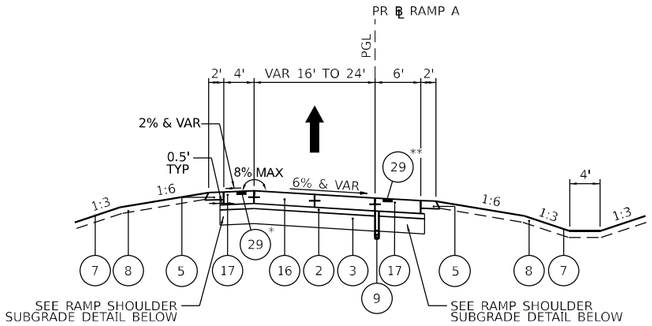

PROPOSED TYPICAL SECTION

RAMP A

STA 102+86 TO STA 106+00

*LT SHOULDER RUMBLE STRIP LIMITS STA 102+86 TO STA 106+88

**RT SHOULDER RUMBLE STRIP LIMITS STA 102+86 TO STA 106+28

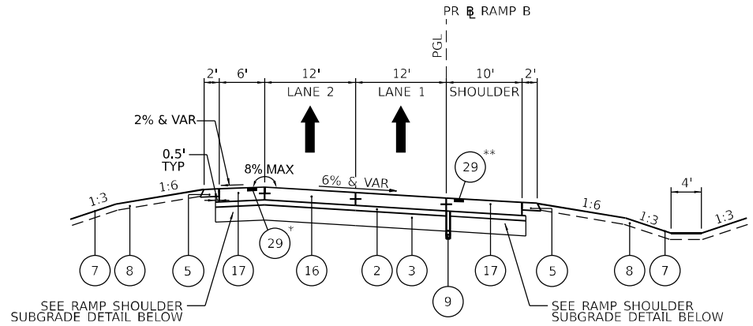

PROPOSED TYPICAL SECTION

RAMP B

STA 217+14 TO STA 220+42

*LT SHOULDER RUMBLE STRIP LIMITS STA 219+08 TO STA 220+42

**RT SHOULDER RUMBLE STRIP LIMITS STA 219+21 TO STA 220+42

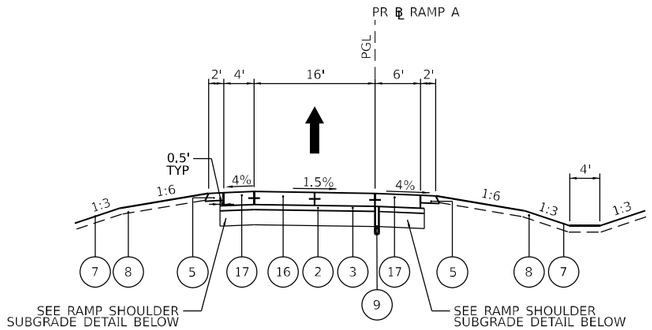

PROPOSED TYPICAL SECTION

RAMP A

STA 106+00 TO STA 110+77.23

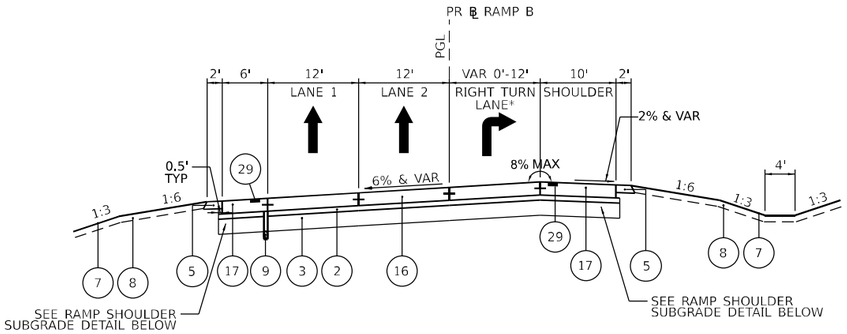

PROPOSED TYPICAL SECTION

RAMP B

STA 220+42 TO STA 225+61

RIGHT TURN LANE STA 224+45 TO 225+61

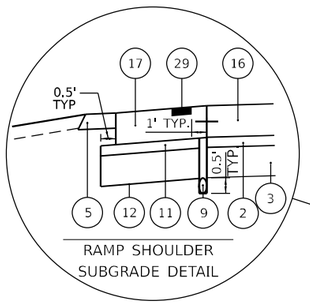

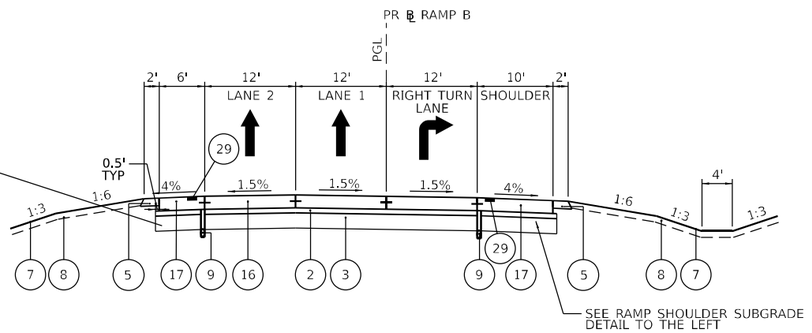

PROPOSED TYPICAL SECTION

RAMP B

STA 225+61 TO STA 225+74

LEGEND

1. CONTINUOUSLY REINFORCED PORTLAND CEMENT CONCRETE PAVEMENT 12 1/2"
2. STABILIZED SUBBASE - HOT-MIX ASPHALT, 4"
3. AGGREGATE SUBGRADE IMPROVEMENT, 12"
4. PORTLAND CEMENT CONCRETE SHOULDERS, 12 1/2"
5. AGGREGATE SHOULDERS, TYPE A
6. CONCRETE BARRIER, DOUBLE FACE, 44" HEIGHT
7. SEEDING (SEE NOTE 5)
8. 4" OF TOPSOIL
9. PIPE UNDERDRAINS 6"
10. CONCRETE BARRIER BASE
11. SHOULDER SUBBASE - CA 6 or CA 10, 4" (INCLUDED IN COST OF PCC SHOULDER)
12. GEOTECHNICAL REINFORCEMENT
13. AGGREGATE SUBGRADE IMPROVEMENT 12" (SPECIAL)
14. HOT-MIX ASPHALT SHOULDERS, 6"
15. AGGREGATE SHOULDERS, TYPE B 4"
16. PORTLAND CEMENT CONCRETE PAVEMENT 10 1/4" (JOINTED)
17. PORTLAND CEMENT CONCRETE SHOULDERS, 10 1/4"
18. COMBINATION CONCRETE CURB & GUTTER, TYPE B-6.24
19. CONCRETE MEDIAN SURFACE, 4 INCH
20. 4" HOT-MIX ASPHALT SURFACE COURSE, MIX "D", IL-9.5, N50
21. AGGREGATE BASE COURSE, TYPE A 6"
22. AGGREGATE SUBGRADE IMPROVEMENT, 18"
23. AGGREGATE SUBGRADE IMPROVEMENT, 21"
24. AGGREGATE SUBGRADE IMPROVEMENT, 24"
25. AGGREGATE SUBGRADE IMPROVEMENT, 30"
26. AGGREGATE SUBGRADE IMPROVEMENT, 36"
27. HOT-MIX ASPHALT PAVEMENT (FULL DEPTH), 13 1/2"
28. NOT USED
29. SHOULDER RUMBLE STRIPS, 16 INCH
30. COMBINATION CONCRETE CURB & GUTTER, TYPE B-6.06
31. 2" HOT-MIX ASPHALT SURFACE COURSE, MIX "D", IL-9.5, N70
32. SUBBASE GRANULAR MATERIAL, TYPE B 6"
33. PORTLAND CEMENT CONCRETE SIDEWALK 5 INCH
34. CONCRETE MEDIAN, TYPE SB-6.18

NOTES

1. SEE HOT-MIX ASPHALT MIXTURE REQUIREMENTS TABLE FOR MIXTURE DESIGN.
2. FOR SUPERELEVATION TRANSITIONS, SEE ROADWAY DETAIL SHEETS.
3. SEE DRAINAGE PLANS FOR LOCATIONS OF PIPE UNDERDRAINS.
4. SEE CROSS SECTIONS FOR SIDE SLOPE AND DITCH DETAILS.
5. SEE LANDSCAPING PLANS FOR SEEDING TYPES AND LOCATIONS.
6. PER HIGHWAY STANDARDS 421201 AND 420206, THE CONTRACTOR SHALL PAVE THE 4" STABILIZED SUBBASE 18" WIDER THAN THE EDGE OF PAVEMENT. THE ADDITIONAL WIDTH SHALL BE REMOVED AND REPLACED WITH CA6 OR CA8 STONE. REMOVAL OF STABILIZED SUBBASE WILL NOT BE MEASURED FOR PAYMENT AND IS INCLUDED IN THE ITEM STABILIZED SUBBASE - HOT-MIX ASPHALT, 4".

MODEL: Default
FILE NAME: pw://benesch-pw.bentley.com:benesch-pw-01/Documents/10800s/10800,00/Eng. Docs/CAD Sheets/Roadway/Typical Sections/D264R71-DD4-sht-PrTypSect-002.dgn

benesch
Alfred Benesch & Company
35 W. Wacker Drive, Suite 3300
Chicago, Illinois 60601
312-565-0150 Job No. 10800,00

USER NAME = agibson	DESIGNED - A.GIBSON	REVISED -	
	DRAWN - J.MAJCHER	REVISED -	
PLOT SCALE = 20.000 ' / in.	CHECKED - J.TARDY	REVISED -	
PLOT DATE = 10/26/2023	DATE - 10/13/2023	REVISED -	

STATE OF ILLINOIS
DEPARTMENT OF TRANSPORTATION

PROPOSED TYPICAL SECTION
RAMP A AND B

SCALE: N/A | SHEET 4 OF 8 SHEETS | STA. | TO STA.

F.A.* RTE.	SECTION	COUNTY	TOTAL SHEETS	SHEET NO.
*	(5)RS & (5&5HB)RC	WINNEBAGO	1279	44
		CONTRACT NO. 64R71		
		ILLINOIS	FED. AID PROJECT	

* FAI ROUTE 39 (I-39) & FAP ROUTE 525 (US 20)

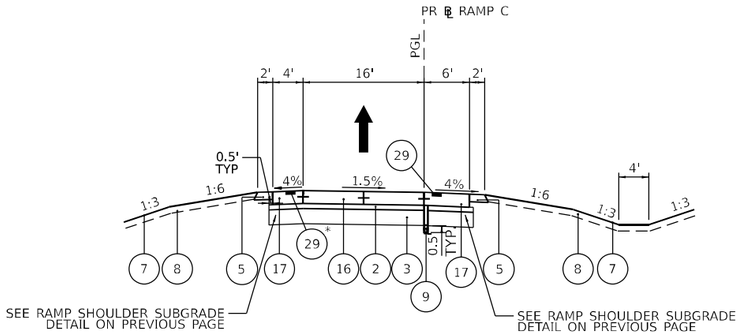

PROPOSED TYPICAL SECTION

RAMP C

STA 304+04.26 TO STA 306+82

*LT SHOULDER RUMBLE STRIP LIMITS STA 306+69 TO 306+82

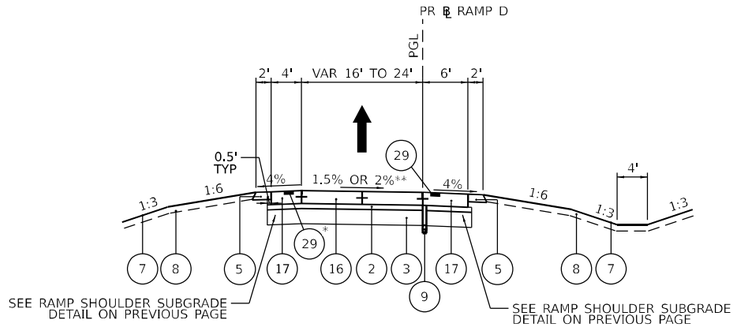

PROPOSED TYPICAL SECTION

RAMP D

STA 402+33 TO STA 405+56

STA 411+71 TO STA 412+00 **

*LT SHOULDER RUMBLE STRIP LIMITS STA 402+33 TO STA 405+56

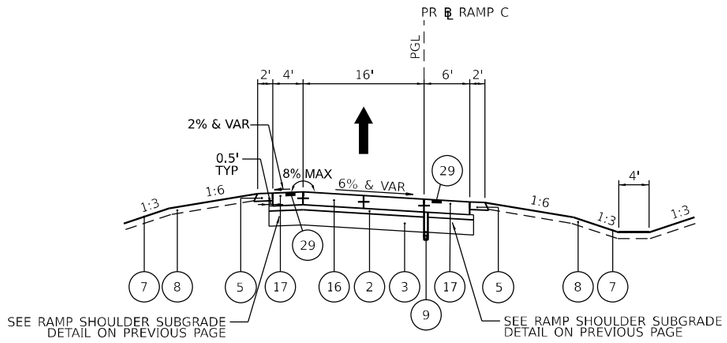

PROPOSED TYPICAL SECTION

RAMP C

STA 306+82 TO STA 313+57

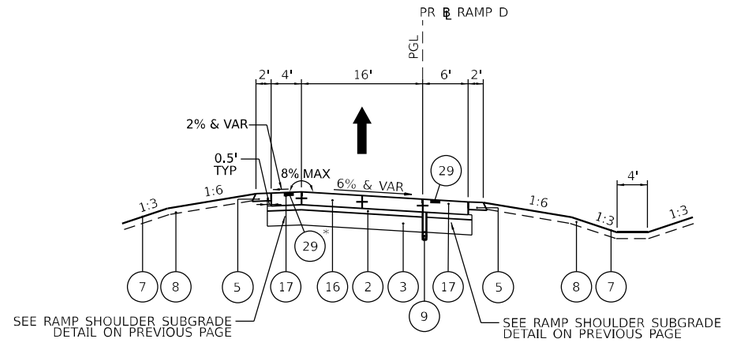

PROPOSED TYPICAL SECTION

RAMP D

STA 405+56 TO STA 411+71

*LT SHOULDER RUMBLE STRIP LIMITS STA 405+56 TO STA 409+87

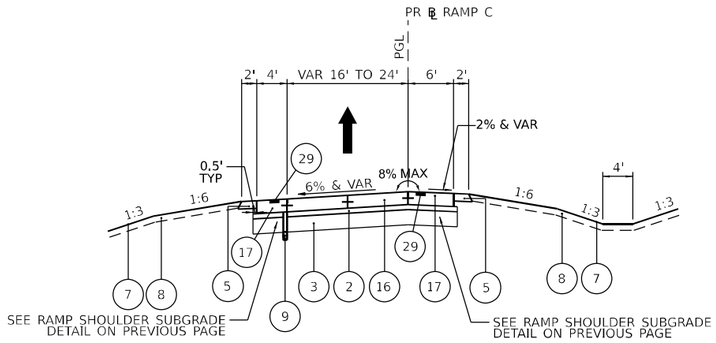

PROPOSED TYPICAL SECTION

RAMP C

STA 313+57 TO STA 317+42

LEGEND

1. CONTINUOUSLY REINFORCED PORTLAND CEMENT CONCRETE PAVEMENT 12 1/2"
2. STABILIZED SUBBASE - HOT-MIX ASPHALT, 4"
3. AGGREGATE SUBGRADE IMPROVEMENT, 12"
4. PORTLAND CEMENT CONCRETE SHOULDERS, 12 1/2"
5. AGGREGATE SHOULDERS, TYPE A
6. CONCRETE BARRIER, DOUBLE FACE, 44" HEIGHT
7. SEEDING (SEE NOTE 5)
8. 4" OF TOPSOIL
9. PIPE UNDERDRAINS 6"
10. CONCRETE BARRIER BASE
11. SHOULDER SUBBASE - CA 6 or CA 10, 4" (INCLUDED IN COST OF PCC SHOULDER)
12. GEOTECHNICAL REINFORCEMENT
13. AGGREGATE SUBGRADE IMPROVEMENT 12" (SPECIAL)
14. HOT-MIX ASPHALT SHOULDERS, 6"
15. AGGREGATE SHOULDERS, TYPE B 4"
16. PORTLAND CEMENT CONCRETE PAVEMENT 10 1/4" (JOINTED)
17. PORTLAND CEMENT CONCRETE SHOULDERS, 10 1/4"
18. COMBINATION CONCRETE CURB & GUTTER, TYPE B-6.24
19. CONCRETE MEDIAN SURFACE, 4 INCH
20. 4" HOT-MIX ASPHALT SURFACE COURSE, MIX "D", IL-9.5, N50
21. AGGREGATE BASE COURSE, TYPE A 6"
22. AGGREGATE SUBGRADE IMPROVEMENT, 18"
23. AGGREGATE SUBGRADE IMPROVEMENT, 21"
24. AGGREGATE SUBGRADE IMPROVEMENT, 24"
25. AGGREGATE SUBGRADE IMPROVEMENT, 30"
26. AGGREGATE SUBGRADE IMPROVEMENT, 36"
27. HOT-MIX ASPHALT PAVEMENT (FULL DEPTH), 13 1/2"
28. NOT USED
29. SHOULDER RUMBLE STRIPS, 16 INCH
30. COMBINATION CONCRETE CURB & GUTTER, TYPE B-6.06
31. 2" HOT-MIX ASPHALT SURFACE COURSE, MIX "D", IL-9.5, N70
32. SUBBASE GRANULAR MATERIAL, TYPE B 6"
33. PORTLAND CEMENT CONCRETE SIDEWALK 5 INCH
34. CONCRETE MEDIAN, TYPE SB-6.18

NOTES

1. SEE HOT-MIX ASPHALT MIXTURE REQUIREMENTS TABLE FOR MIXTURE DESIGN.
2. FOR SUPERELEVATION TRANSITIONS, SEE ROADWAY DETAIL SHEETS.
3. SEE DRAINAGE PLANS FOR LOCATIONS OF PIPE UNDERDRAINS.
4. SEE CROSS SECTIONS FOR SIDE SLOPE AND DITCH DETAILS.
5. SEE LANDSCAPING PLANS FOR SEEDING TYPES AND LOCATIONS.
6. PER HIGHWAY STANDARDS 421201 AND 420206, THE CONTRACTOR SHALL PAVE THE 4" STABILIZED SUBBASE 18" WIDER THAN THE EDGE OF PAVEMENT. THE ADDITIONAL WIDTH SHALL BE REMOVED AND REPLACED WITH CA6 OR CA8 STONE. REMOVAL OF STABILIZED SUBBASE WILL NOT BE MEASURED FOR PAYMENT AND IS INCLUDED IN THE ITEM STABILIZED SUBBASE - HOT-MIX ASPHALT, 4".

MODEL: Default
FILE NAME: pw://benesch-pw.bentley.com:benesch-pw-01/Documents/10800s/10800,00/Eng Docs/CAD Sheets/Roadway/Typical Sections/D264R71-D04-sht-RTypSect-003.dgn

benesch
Alfred Benesch & Company
35 W. Wacker Drive, Suite 3300
Chicago, Illinois 60601
312-565-0450 Job No. 10800,00

USER NAME = agibson	DESIGNED - A.GIBSON	REVISED -	
	DRAWN - J.MAJCHER	REVISED -	
PLOT SCALE = 20.000 ' / in.	CHECKED - J.TARDY	REVISED -	
PLOT DATE = 11/27/2023	DATE - 10/13/2023	REVISED -	

STATE OF ILLINOIS
DEPARTMENT OF TRANSPORTATION

PROPOSED TYPICAL SECTION
RAMP C AND D

SCALE: N/A | SHEET 5 OF 8 SHEETS | STA. | TO STA.

F.A.* RTE.	SECTION	COUNTY	TOTAL SHEETS	SHEET NO.
*	(5)RS & (5&5HB)RC	WINNEBAGO	1279	45
		CONTRACT NO. 64R71		
	ILLINOIS	FED. AID PROJECT		

* FAI ROUTE 39 (I-39) & FAP ROUTE 525 (US 20)

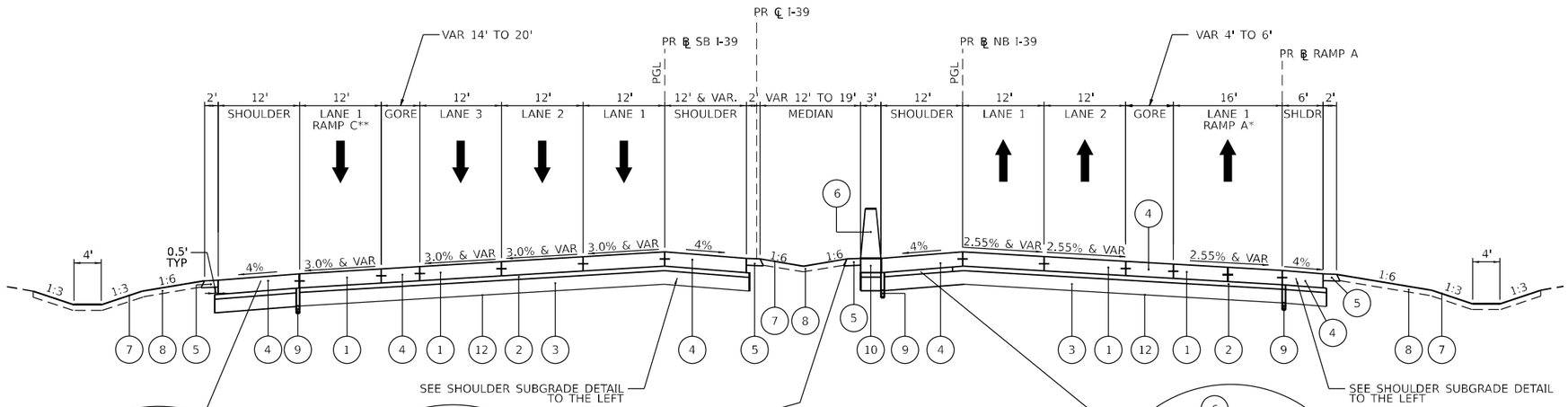

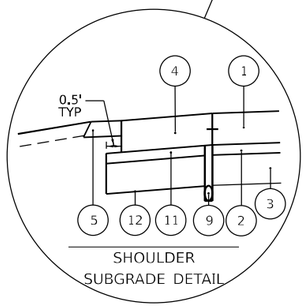

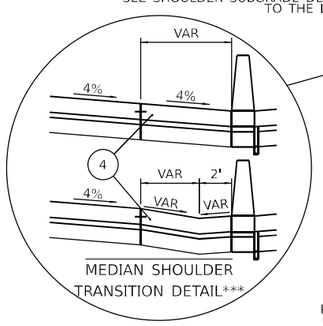

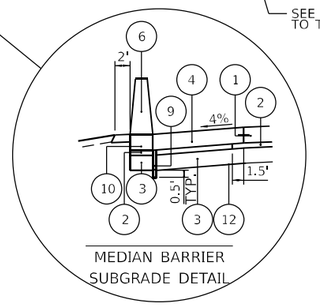

PROPOSED TYPICAL SECTION

I–39

NB STA 12+37 TO STA 13+49
SB STA 1306+33.75 TO STA 1310+13
*RAMP A LIMITS ARE STA 10+35 TO STA 13+49
**RAMP C LIMITS ARE STA 1308+53 TO STA 1310+13
***SB SHOULDER EXTENDS TO BACK OF NB BARRIER FROM STA 1306+33.75 TO 1307+59.90. ADDITIONAL SHOULDER TRANSITIONS INTO GORE FROM STA 1307+59.90 TO STA 1307+96.50. SEE GORE DETAILS FOR MORE INFORMATION.

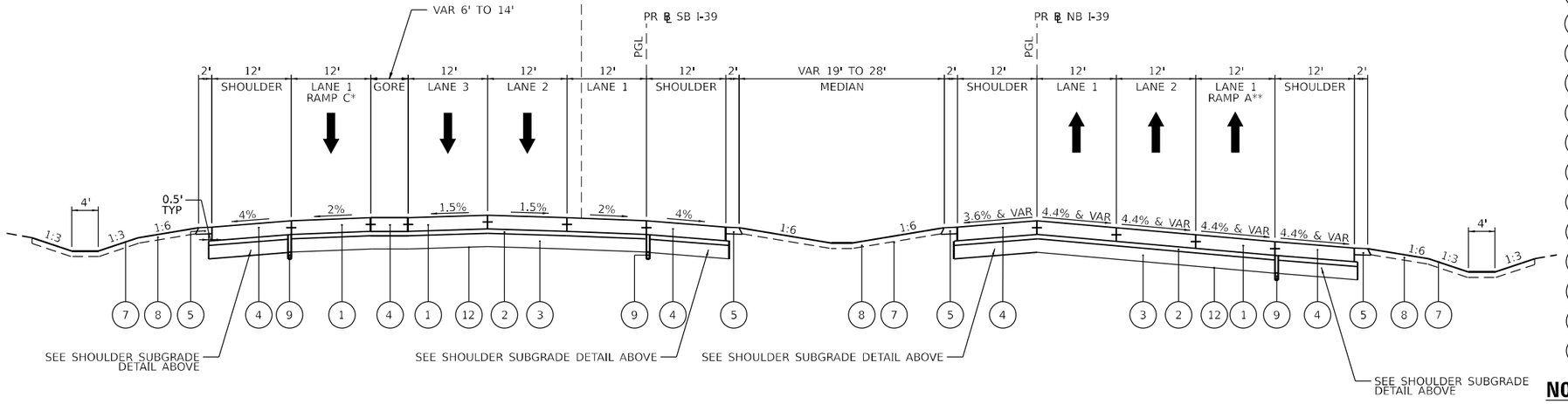

PROPOSED TYPICAL SECTION

I–39

NB STA 13+49 TO STA 20+95
SB STA 1310+13 TO STA 1316+84
*RAMP C LIMITS ARE STA 1310+13 TO STA 1315+22
**RAMP A LIMITS ARE NB STA 13+49 TO STA 17+52

LEGEND

1. CONTINUOUSLY REINFORCED PORTLAND CEMENT CONCRETE PAVEMENT 12 1/2"
2. STABILIZED SUBBASE - HOT-MIX ASPHALT, 4"
3. AGGREGATE SUBGRADE IMPROVEMENT, 12"
4. PORTLAND CEMENT CONCRETE SHOULDERS, 12 1/2"
5. AGGREGATE SHOULDERS, TYPE A
6. CONCRETE BARRIER, DOUBLE FACE, 44" HEIGHT
7. SEEDING (SEE NOTE 5)
8. 4" OF TOPSOIL
9. PIPE UNDERDRAINS 6"
10. CONCRETE BARRIER BASE
11. SHOULDER SUBBASE - CA 6 or CA 10, 4" (INCLUDED IN COST OF PCC SHOULDER)
12. GEOTECHNICAL REINFORCEMENT
13. AGGREGATE SUBGRADE IMPROVEMENT 12" (SPECIAL)
14. HOT-MIX ASPHALT SHOULDERS, 6"
15. AGGREGATE SHOULDERS, TYPE B 4"
16. PORTLAND CEMENT CONCRETE PAVEMENT 10 1/4" (JOINTED)
17. PORTLAND CEMENT CONCRETE SHOULDERS, 10 1/4"
18. COMBINATION CONCRETE CURB & GUTTER, TYPE B-6.24
19. CONCRETE MEDIAN SURFACE, 4 INCH
20. 4" HOT-MIX ASPHALT SURFACE COURSE, MIX "D", IL-9.5, N50
21. AGGREGATE BASE COURSE, TYPE A 6"
22. AGGREGATE SUBGRADE IMPROVEMENT, 18"
23. AGGREGATE SUBGRADE IMPROVEMENT, 21"
24. AGGREGATE SUBGRADE IMPROVEMENT, 24"
25. AGGREGATE SUBGRADE IMPROVEMENT, 30"
26. AGGREGATE SUBGRADE IMPROVEMENT, 36"
27. HOT-MIX ASPHALT PAVEMENT (FULL DEPTH), 13 1/2"
28. NOT USED
29. SHOULDER RUMBLE STRIPS, 16 INCH
30. COMBINATION CONCRETE CURB & GUTTER, TYPE B-6.06
31. 2" HOT-MIX ASPHALT SURFACE COURSE, MIX "D", IL-9.5, N70
32. SUBBASE GRANULAR MATERIAL, TYPE B 6"
33. PORTLAND CEMENT CONCRETE SIDEWALK 5 INCH
34. CONCRETE MEDIAN, TYPE SB-6.18

NOTES

1. SEE HOT-MIX ASPHALT MIXTURE REQUIREMENTS TABLE FOR MIXTURE DESIGN.
2. FOR SUPERELEVATION TRANSITIONS, SEE ROADWAY DETAIL SHEETS.
3. SEE DRAINAGE PLANS FOR LOCATIONS OF PIPE UNDERDRAINS.
4. SEE CROSS SECTIONS FOR SIDE SLOPE AND DITCH DETAILS.
5. SEE LANDSCAPING PLANS FOR SEEDING TYPES AND LOCATIONS.
6. PER HIGHWAY STANDARDS 421201 AND 420206, THE CONTRACTOR SHALL PAVE THE 4" STABILIZED SUBBASE 18" WIDER THAN THE EDGE OF PAVEMENT. THE ADDITIONAL WIDTH SHALL BE REMOVED AND REPLACED WITH CA6 OR CA8 STONE. REMOVAL OF STABILIZED SUBBASE WILL NOT BE MEASURED FOR PAYMENT AND IS INCLUDED IN THE ITEM STABILIZED SUBBASE - HOT-MIX ASPHALT, 4".

MODEL: Default
FILE NAME: pw://benesch-pw.bentley.com:benesch-pw-01/Documents\10800s\10800\00\Eng Docs\CAD Sheets\Roadway\Typical Sections\D764871-00\dist=PrjSect-001.dgn

benesch
Alfred Benesch & Company
35 W. Wacker Drive, Suite 3300
Chicago, Illinois 60601
312.565.0450 Job No. 10800.00

USER NAME = agibson	DESIGNED - A.GIBSON	REVISED -	
	DRAWN - J.MAJCHER	REVISED -	
PLOT SCALE = 20.000 ' / in.	CHECKED - J.TARDY	REVISED -	
PLOT DATE = 10/26/2023	DATE - 10/13/2023	REVISED -	

STATE OF ILLINOIS
DEPARTMENT OF TRANSPORTATION

PROPOSED TYPICAL SECTION
I-39

SCALE: N/A | SHEET 6 OF 8 SHEETS | STA. | TO STA.

F.A.* RTE.	SECTION	COUNTY	TOTAL SHEETS	SHEET NO.
*	(5)RS & (5&5HB)RC	WINNEBAGO	1279	46
		CONTRACT NO. 64R71		
	ILLINOIS FED. AID PROJECT			

* FAI ROUTE 39 (I-39) & FAP ROUTE 525 (US 20)

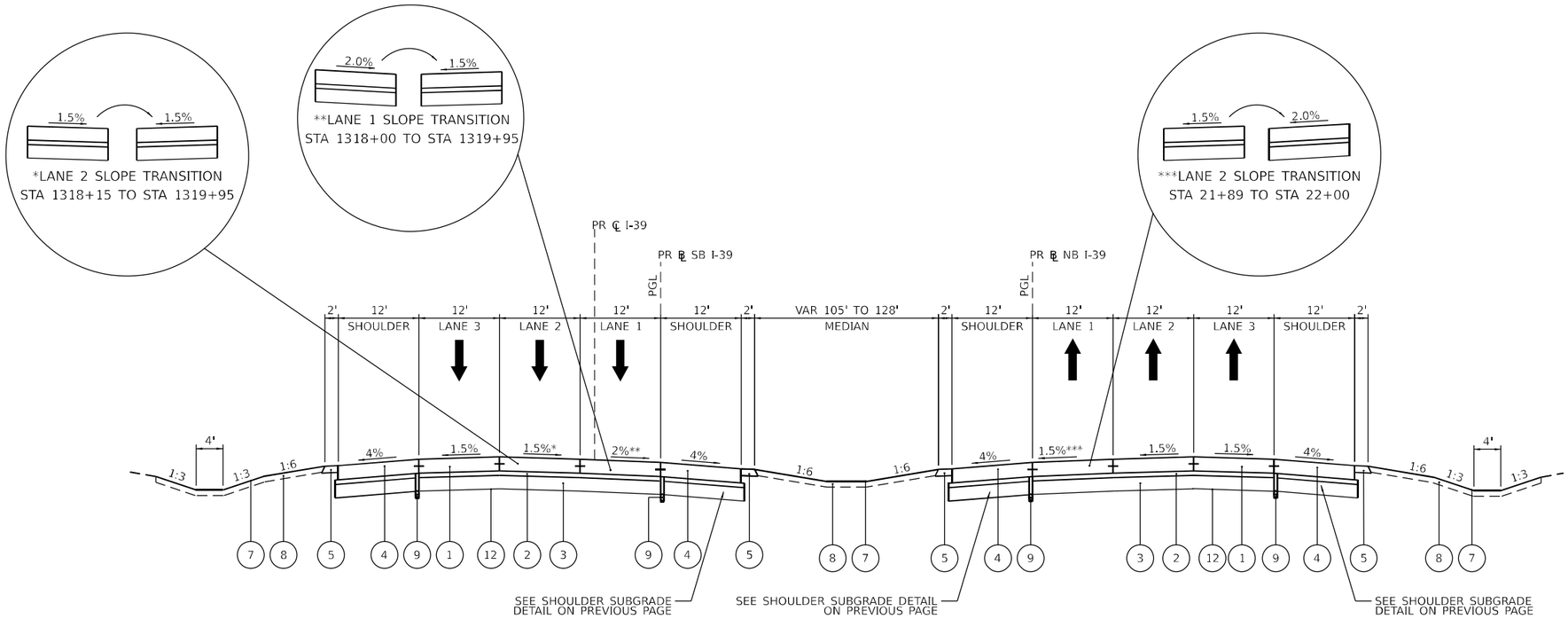

PROPOSED TYPICAL SECTION

I–39

NB STA 20+95 TO STA 22+00
SB STA 1316+84 TO STA 1319+95

LEGEND

1. CONTINUOUSLY REINFORCED PORTLAND CEMENT CONCRETE PAVEMENT 12 1/2"
2. STABILIZED SUBBASE - HOT-MIX ASPHALT, 4"
3. AGGREGATE SUBGRADE IMPROVEMENT, 12"
4. PORTLAND CEMENT CONCRETE SHOULDERS, 12 1/2"
5. AGGREGATE SHOULDERS, TYPE A
6. CONCRETE BARRIER, DOUBLE FACE, 44" HEIGHT
7. SEEDING (SEE NOTE 5)
8. 4" OF TOPSOIL
9. PIPE UNDERDRAINS 6"
10. CONCRETE BARRIER BASE
11. SHOULDER SUBBASE - CA 6 or CA 10, 4" (INCLUDED IN COST OF PCC SHOULDER)
12. GEOTECHNICAL REINFORCEMENT
13. AGGREGATE SUBGRADE IMPROVEMENT 12" (SPECIAL)
14. HOT-MIX ASPHALT SHOULDERS, 6"
15. AGGREGATE SHOULDERS, TYPE B 4"
16. PORTLAND CEMENT CONCRETE PAVEMENT 10 1/4" (JOINTED)
17. PORTLAND CEMENT CONCRETE SHOULDERS, 10 1/4"
18. COMBINATION CONCRETE CURB & GUTTER, TYPE B-6.24
19. CONCRETE MEDIAN SURFACE, 4 INCH
20. 4" HOT-MIX ASPHALT SURFACE COURSE, MIX "D", IL-9.5, N50
21. AGGREGATE BASE COURSE, TYPE A 6"
22. AGGREGATE SUBGRADE IMPROVEMENT, 18"
23. AGGREGATE SUBGRADE IMPROVEMENT, 21"
24. AGGREGATE SUBGRADE IMPROVEMENT, 24"
25. AGGREGATE SUBGRADE IMPROVEMENT, 30"
26. AGGREGATE SUBGRADE IMPROVEMENT, 36"
27. HOT-MIX ASPHALT PAVEMENT (FULL DEPTH), 13 1/2"
28. NOT USED
29. SHOULDER RUMBLE STRIPS, 16 INCH
30. COMBINATION CONCRETE CURB & GUTTER, TYPE B-6.06
31. 2" HOT-MIX ASPHALT SURFACE COURSE, MIX "D", IL-9.5, N70
32. SUBBASE GRANULAR MATERIAL, TYPE B 6"
33. PORTLAND CEMENT CONCRETE SIDEWALK 5 INCH
34. CONCRETE MEDIAN, TYPE SB-6.18

NOTES

1. SEE HOT-MIX ASPHALT MIXTURE REQUIREMENTS TABLE FOR MIXTURE DESIGN.
2. FOR SUPERELEVATION TRANSITIONS, SEE ROADWAY DETAIL SHEETS.
3. SEE DRAINAGE PLANS FOR LOCATIONS OF PIPE UNDERDRAINS.
4. SEE CROSS SECTIONS FOR SIDE SLOPE AND DITCH DETAILS.
5. SEE LANDSCAPING PLANS FOR SEEDING TYPES AND LOCATIONS.
6. PER HIGHWAY STANDARDS 421201 AND 420206, THE CONTRACTOR SHALL PAVE THE 4" STABILIZED SUBBASE 18" WIDER THAN THE EDGE OF PAVEMENT. THE ADDITIONAL WIDTH SHALL BE REMOVED AND REPLACED WITH CA6 OR CA8 STONE. REMOVAL OF STABILIZED SUBBASE WILL NOT BE MEASURED FOR PAYMENT AND IS INCLUDED IN THE ITEM STABILIZED SUBBASE - HOT-MIX ASPHALT, 4".

MODEL: Default
FILE NAME: pw:\benesch-pw.bentley.com:benesch-pw-01\Documents\108000\108000.00\Eng. Docs\CAD Sheets\Roadway\Typical Sections\D264R71-D01-sns-PrTypSect-001A.dgn

benesch
Alfred Benesch & Company
35 W. Wacker Drive, Suite 3300
Chicago, Illinois 60601
312-565-0450 Job No. 10800.00

USER NAME = agibson	DESIGNED - A.GIBSON	REVISED -	
	DRAWN - J.MAJCHER	REVISED -	
PLOT SCALE = 20.000 ' / in.	CHECKED - J.TARDY	REVISED -	
PLOT DATE = 10/26/2023	DATE - 10/13/2023	REVISED -	

STATE OF ILLINOIS
DEPARTMENT OF TRANSPORTATION

PROPOSED TYPICAL SECTION
I-39

SCALE: N/A | SHEET 7 OF 8 SHEETS | STA. TO STA.

F.A.* RTE.	SECTION	COUNTY	TOTAL SHEETS	SHEET NO.
*	(5)RS & (5&5HB)RC	WINNEBAGO	1279	47
		CONTRACT NO. 64R71		
	ILLINOIS	FED. AID PROJECT		

* FAI ROUTE 39 (I-39) & FAP ROUTE 525 (US 20)

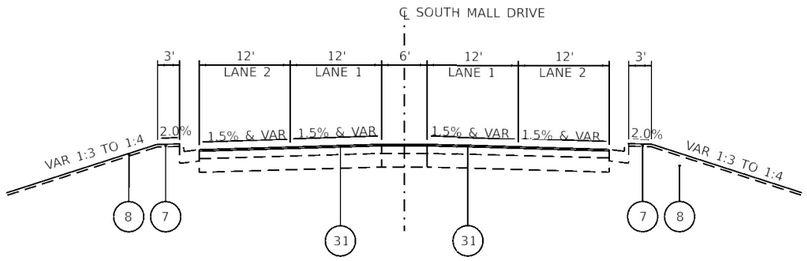

PROPOSED TYPICAL SECTION
SOUTH MALL DRIVE

STA 297+43 TO STA 298+49

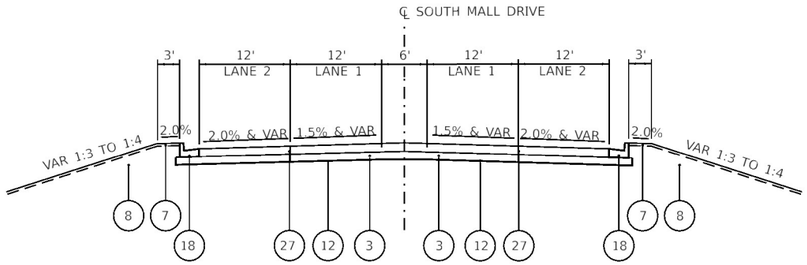

PROPOSED TYPICAL SECTION
SOUTH MALL DRIVE

STA 298+49 TO STA 299+55

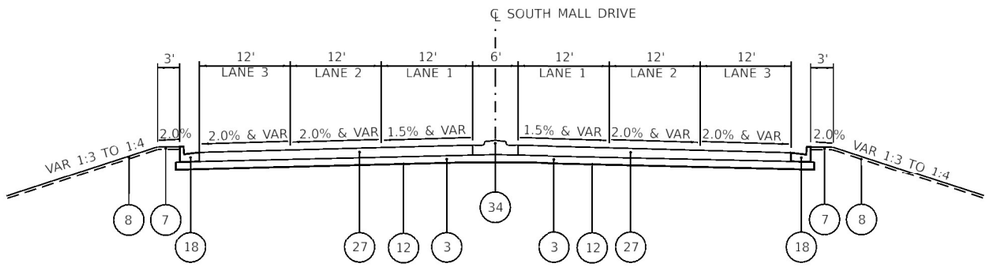

PROPOSED TYPICAL SECTION
SOUTH MALL DRIVE

STA 300+33 TO STA 303+37

LEGEND

1. CONTINUOUSLY REINFORCED PORTLAND CEMENT CONCRETE PAVEMENT 12 1/2"
2. STABILIZED SUBBASE - HOT-MIX ASPHALT, 4"
3. AGGREGATE SUBGRADE IMPROVEMENT, 12"
4. PORTLAND CEMENT CONCRETE SHOULDERS, 12 1/2"
5. AGGREGATE SHOULDERS, TYPE A
6. CONCRETE BARRIER, DOUBLE FACE, 44" HEIGHT
7. SEEDING (SEE NOTE 5)
8. 4" OF TOPSOIL
9. PIPE UNDERDRAINS 6"
10. CONCRETE BARRIER BASE
11. SHOULDER SUBBASE - CA 6 or CA 10, 4" (INCLUDED IN COST OF PCC SHOULDER)
12. GEOTECHNICAL REINFORCEMENT
13. NOT USED
14. NOT USED
15. NOT USED
16. PORTLAND CEMENT CONCRETE PAVEMENT 10 1/4" (JOINTED)
17. PORTLAND CEMENT CONCRETE SHOULDERS, 10 1/4"
18. COMBINATION CONCRETE CURB & GUTTER, TYPE B-6.24
19. CONCRETE MEDIAN SURFACE, 4 INCH
20. 4" HOT-MIX ASPHALT SURFACE COURSE, MIX "D", IL-9.5, N50
21. AGGREGATE BASE COURSE, TYPE A 6"
22. AGGREGATE SUBGRADE IMPROVEMENT, 18"
23. AGGREGATE SUBGRADE IMPROVEMENT, 21"
24. AGGREGATE SUBGRADE IMPROVEMENT, 24"
25. AGGREGATE SUBGRADE IMPROVEMENT, 30"
26. AGGREGATE SUBGRADE IMPROVEMENT, 36"
27. HOT-MIX ASPHALT PAVEMENT (FULL DEPTH), 13 1/2"
28. NOT USED
29. SHOULDER RUMBLE STRIPS, 16 INCH
30. COMBINATION CONCRETE CURB & GUTTER, TYPE B-6.06
31. 2" HOT-MIX ASPHALT SURFACE COURSE, MIX "D", IL-9.5, N70
32. SUBBASE GRANULAR MATERIAL, TYPE B 6"
33. PORTLAND CEMENT CONCRETE SIDEWALK 5 INCH
34. CONCRETE MEDIAN, TYPE SB-6.18

NOTES

1. SEE HOT-MIX ASPHALT MIXTURE REQUIREMENTS TABLE FOR MIXTURE DESIGN.
2. FOR SUPERELEVATION TRANSITIONS, SEE ROADWAY DETAIL SHEETS.
3. SEE DRAINAGE PLANS FOR LOCATIONS OF PIPE UNDERDRAINS.
4. SEE CROSS SECTIONS FOR SIDE SLOPE AND DITCH DETAILS.
5. SEE LANDSCAPING PLANS FOR SEEDING TYPES AND LOCATIONS.
6. PER HIGHWAY STANDARDS 421201 AND 420206, THE CONTRACTOR SHALL PAVE THE 4" STABILIZED SUBBASE 18" WIDER THAN THE EDGE OF PAVEMENT. THE ADDITIONAL WIDTH SHALL BE REMOVED AND REPLACED WITH CA6 OR CA8 STONE. REMOVAL OF STABILIZED SUBBASE WILL NOT BE MEASURED FOR PAYMENT AND IS INCLUDED IN THE ITEM STABILIZED SUBBASE - HOT-MIX ASPHALT, 4".

MODEL: Default
FILE NAME: pw://bmtech-pw.bentley.com:bmtech-pw-01/Documents/210800s/10800.00/Eng Docs/CAD Sheets/Roadway/Typical Sections/Local Roads (WHA)/D264R71-Sht-TypicalMall.dgn

WILLETT HOFMANN & ASSOCIATES, INC.
ENGINEERING · ARCHITECTURE · LAND SURVEYING
800 EAST 2ND STREET, DIXON, IL 61021-0507
T: 815-284-2281 FAX: 815-284-2287

USER NAME = cmorgan	DESIGNED - CMM	REVISED -	
	DRAWN - CMM	REVISED -	
PLOT SCALE = 20.001 ' / in.	CHECKED - GFS	REVISED -	
PLOT DATE = 10/5/2023	DATE - 10/13/2023	REVISED -	

STATE OF ILLINOIS
DEPARTMENT OF TRANSPORTATION

PROPOSED TYPICAL SECTION
SOUTH MALL DR

SCALE: N/A | SHEET 8 OF 8 SHEETS | STA. | TO STA.

F.A.* RTE.	SECTION	COUNTY	TOTAL SHEETS	SHEET NO.
*	(5)RS & (5&5HB)RC	WINNEBAGO	1279	48
		CONTRACT NO. 64R71		
	ILLINOIS	FED. AID PROJECT		

* FAI ROUTE 39 (I-39) & FAP ROUTE 525 (US 20)

LOCATION	EARTH EXCAVATION (20200100)	EARTH EXCAVATION ADJUSTED FOR SHRINKAGE (20%)	EMBANKMENT	EARTHWORK BALANCE WASTE (+) OR SHORTAGE (-)	FURNISHED EXCAVATION	EARTHWORK BALANCE AFTER FURNISH	TOPSOIL EXCAVATION AND PLACEMENT (21101505)	REQUIRED TOPSOIL PLACEMENT 4"	TOPSOIL BALANCE WASTE (+) OR SHORTAGE (-)	TOPSOIL REQUIRED FOR FURNISH AND PLACE	TOPSOIL FURNISH AND PLACE, 4" (21101615)	TOPSOIL BALANCE AFTER FURNISH
	CUBIC YARD	CUBIC YARD	CUBIC YARD	CUBIC YARD	CUBIC YARD	CUBIC YARD	CUBIC YARD	CUBIC YARD	CUBIC YARD	CUBIC YARD	SQUARE YARD	CUBIC YARD
US 20/Harrison Ave Stage 1/1B												
Begin TO 153+08.66	5786.0	4628.8	9507.0	-4878.2	4846.0		2874.1	335.8				
1311+13.21 TO End	3126.0	2500.8	3846.0	-1345.2	1345.2		1892.3	0.0				
SUB TOTAL	**8,912.0**	**7,129.6**	**13,353.0**	**-6,223.4**	**6,191.2**		**4,766.4**	**335.8**				
Mall Drive Stage 1/1B												
STAGE 1/1B	571.7	457.4	425.2	32.2			71.8	61.7				
SUB TOTAL	**571.7**	**457.4**	**425.2**	**32.2**	**0.0**		**71.8**	**61.7**				
Ramps Stage 1/1B												
RAMP A							177.2	0.0				
RAMP B							398.7	0.0				
RAMP C							223.6	0.0				
RAMP D							108.1	0.0				
TEMPORARY RAMP PR RAMP A ALIGNMENT	57.1	45.7	2887.1	-2841.4	2804.4							
TEMPORARY RAMP EX RAMP DA ALIGNMENT	237.0	189.6	1082.1	-892.5	892.5							
TEMPORARY RAMP EX RAMP CB ALIGNMENT	123.2	98.6	61.6	37.0	0.0							
SUB TOTAL	**417.4**	**333.9**	**4,030.8**	**-3,696.9**	**3,696.9**		**907.6**	**0.0**				
STAGE 1/1B TOTAL	**9,902.0**	**7,921.0**	**17,809.0**	**-9,888.0**	**9,888.0**	**0.0**	**5,746.0**	**398.0**	**5,348.0**	**0.0**	**0.0**	**5,348.0**
US 20/Harrison Ave Stage 2/2B												
Begin TO 153+08.66	9487.0	7589.6	1325.0	6264.6			829.4	761.4				
1311+13.21 TO End	5680.0	4544.0	6409.0	-1865.0			562.4	519.7				
SUB TOTAL	**15,167.0**	**12,133.6**	**7,734.0**	**4,399.6**			**1,391.8**	**1,281.1**				
I-39 NB Stage 2/2B												
STATION 18+00.00 TO 22+00.00							364.6	0.0				
SUB TOTAL	**0.0**	**0.0**	**0.0**	**0.0**			**364.6**	**0.0**				
I-39 SB Stage 2/2B												
STATION 2731+34.51 TO 2751+50.50	1392.4	1113.9	9.5	1104.4			96.0	0.0				
SUB TOTAL	**1,392.4**	**1,113.9**	**9.5**	**1,104.4**			**96.0**	**0.0**				
Ramps Stage 2/2B												
Ramp A							280.5	0.0				
Ramp C							1266.0	0.0				
SUB TOTAL	**0.0**	**0.0**	**0.0**	**0.0**			**1,546.5**	**0.0**				
Ponds - Stage 2/2B												
POND K5	22618.2	18094.6	163.1	17931.5			0.0	298.9				
POND K10	3765.5	3012.4	0.0	3012.4			0.0	89.2				
SUB TOTAL	**26,383.7**	**21,107.0**	**163.1**	**20,943.9**			**0.0**	**388.1**				
STAGE 2/2B TOTAL	**42,944.0**	**34,355.0**	**7,907.0**	**26,448.0**		**26,448.0**	**3,399.0**	**1,670.0**	**7,077.0**	**0.0**	**0.0**	**7,077.0**
US 20/Harrison Ave Stage 3/3B												
Begin TO 153+08.66	7939.0	6351.2	5827.0	524.2			965.4	2831.1				
1311+13.21 TO End	3325.0	2660.0	5778.0	-3118.0			1259.8	2183.8				
SUB TOTAL	**11,264.0**	**9,011.2**	**11,605.0**	**-2,593.8**			**2,225.2**	**5,014.9**				
I-39 NB Stage 3/3B (SEE NOTE 8)												
STATION 18+00.00 TO 22+00.00	2244.0	1795.2	568.1	1227.1			363.7	486.8				
SUB TOTAL	**2,244.0**	**1,795.2**	**568.1**	**1,227.1**			**363.7**	**486.8**				
I-39 SB Stage 3/3B (SEE NOTE 8)												
STATION 2731+34.51 TO 2751+50.50							746.8	640.8				
SUB TOTAL	**0.0**	**0.0**	**0.0**	**0.0**			**746.8**	**640.8**				
Ramps Stage 3/3B												
RAMP A (SEE NOTE 8)	10507.9	8406.3	5028.4	3377.9			2978.9	3145.7				
RAMP D	7983.5	6386.8	29999.8	-23613.0			4480.4	3984.8				
SUB TOTAL	**18,491.4**	**14,793.1**	**35,028.2**	**-20,235.1**			**7,459.3**	**7,130.5**				
Ponds - Stage 3/3B												
POND K3	12487.2	9989.8	2179.3	7810.4			0.0	218.6				
POND K4	46468.9	37175.1	6145.7	31029.4			0.0	677.5				
POND K10-1/1.4	22509.1	18007.3	926.5	17080.8			0.0	2573.9				
ADDITIONAL VOLUME FROM MESH (SEE NOTE 7)	32059.1	25647.3		25647.3								
SUB TOTAL	**113,524.3**	**90,819.4**	**9,251.6**	**81,567.9**			**0.0**	**3,470.0**		**0.0**	**0.0**	**0.0**
STAGE 3/3B TOTAL	**145,524.0**	**116,419.0**	**56,453.0**	**59,966.0**		**86,414.0**	**10,795.0**	**16,744.0**	**1,128.0**	**0.0**	**0.0**	**1,128.0**

benesch
Alfred Benesch & Company
35 W. Wacker Drive, Suite 3300
Chicago, Illinois 60601
312.565.0450 Job No. 10800.00

USER NAME = JMajcher	DESIGNED - A.GIBSON	REVISED -	STATE OF ILLINOIS DEPARTMENT OF TRANSPORTATION	**SCHEDULE OF QUANTITIES EARTHWORK**
	DRAWN - J.MAJCHER	REVISED -		
PLOT SCALE = 0.167 ' / in.	CHECKED - J.TARDY	REVISED -		
PLOT DATE = 10/27/2023	DATE - 10/13/2023	REVISED -		SCALE: N/A | SHEET 1 OF 48 SHEETS | STA. | TO STA.

F.A.* RTE.	SECTION	COUNTY	TOTAL SHEETS	SHEET NO.
*	(5)RS & (5&5HB)RC	WINNEBAGO	1279	49
		CONTRACT NO. 64R71		
	ILLINOIS FED. AID PROJECT			

* FAI ROUTE 39 (I-39) & FAP ROUTE 525 (US 20)

MODEL: Default
FILE NAME: pw://benesch-pw.bentley.com:benesch-pw-01/Documents/10800s/10800.00/Eng Docs/CAD Sheets/General/D0264R71-2D0-sht-SCH-01.dgn

LOCATION	EARTH EXCAVATION (20200100)	EARTH EXCAVATION ADJUSTED FOR SHRINKAGE (20%)	EMBANKMENT	EARTHWORK BALANCE WASTE (+) OR SHORTAGE (-)	FURNISHED EXCAVATION	EARTHWORK BALANCE AFTER FURNISH	TOPSOIL EXCAVATION AND PLACEMENT (21101505)	REQUIRED TOPSOIL PLACEMENT 4"	TOPSOIL BALANCE WASTE (+) OR SHORTAGE (-)	TOPSOIL REQUIRED FOR FURNISH AND PLACE	TOPSOIL FURNISH AND PLACE, 4" (21101615)	TOPSOIL BALANCE AFTER FURNISH
	CUBIC YARD	CUBIC YARD	CUBIC YARD	CUBIC YARD	CUBIC YARD	CUBIC YARD	CUBIC YARD	CUBIC YARD	CUBIC YARD	CUBIC YARD	SQUARE YARD	CUBIC YARD
US 20/Harrison Ave Stage 4/4B												
Begin TO 153+08.66	5418.0	4334.4	1139.0	3195.4			223.3	1056.5		1056.5	9508.5	
1311+13.21 TO End	2462.0	1969.6	294.0	1675.6			428.1	848.4		848.4	7635.6	
SUB TOTAL	**7,880.0**	**6,304.0**	**1,433.0**	**4,871.0**			**651.4**	**1,904.9**	**-1,253.5**	**1,904.9**	**17,144.1**	
I-39 SB Stage 4/4B												
STATION 2731+34.51 TO 2751+50.50	2343.5	1874.8	477.6	1397.2			172.6	256.7		256.7	2310.3	
SUB TOTAL	**2,343.5**	**1,874.8**	**477.6**	**1,397.2**			**172.6**	**256.7**	**-84.1**	**256.7**	**2,310.3**	
Ponds - Stage 4/4B												
POND K6	48064.1	38451.3	33.7	38417.6			0.0	542.8		542.8	4885.2	
POND K9	34918.2	27934.6	295.7	27638.9			0.0	1317.0		1317.0	3407.4	
SE QUADRANT - EX RAMP DB ALIGNMENT	9189.1	7351.3	6612.6	738.7			0.0	0.0				
ADDITIONAL VOLUME FROM MESH (SEE NOTE 7)	16945.6	13556.5		13556.5								
SUB TOTAL	**109,117.0**	**87,293.6**	**6,942.0**	**80,351.6**			**0.0**	**1,859.8**	**-1,859.8**	**1,859.8**	**8,292.6**	
Ramps Stage 4/4B												
Ramp B	5206.9	4165.5	7460.8	-3295.3			4622.1	4684.0		189.7		
Ramp C	8829.5	7063.6	10754.8	-3691.2			3064.5	4015.7				
SUB TOTAL	**14,036.4**	**11,229.1**	**18,215.6**	**-6,986.5**			**7,686.6**	**8,699.7**	**-1,013.1**	**189.7**	**0.0**	
STAGE 4/4B TOTAL	**133,377.0**	**106,702.0**	**27,069.0**	**79,634.0**		**166,048.0**	**8,511.0**	**12,722.0**	**-3,083.0**	**4,212.0**	**27,747.0**	**0.0**
TOTAL	**331,745**	**265,397**	**109,237**	**156,160**	**9,888**		**28,452**	**31,534**		**4,212**	**27,747**	
20% EXPANSION FOR WASTE NOT USED AS EMBANKMENT				**31,232**								
GRAND TOTAL	**331,745**	**265,397**	**109,237**	**187,392**	**9,888**		**28,452**	**31,534**		**4,212**	**27,747**	

NOTES:

1. PROPOSED TOPSOIL DEPTH IS 4" UNLESS OTERHWISE NOTED. SEE GRADING PLANS FOR 12" TOPSOIL PLACEMENT LOCATIONS.

2. THE PROJECT HAS AN ESTIMATED SURPLUS EARTH EXCAVATION. ALL SURPLUS MATERIAL WILL BE REMOVED FROM THE PROJECT SITE AT NO ADDITIONAL COST.

3. IT IS ANTICIPATED THAT DUE TO STAGING, THE CONTRACTOR MAY NEED TO HANDLE EARTHWORK MATERIALS MORE THAN ONCE. MULTIPLE HANDLING (TEMPORARY STOCKPILES) OF ALL EARTHWORK-RELATED MATERIALS IS INCLUDED IN THE CONTRACT AND WILL NOT BE MEASURED FOR PAYMENT SEPARATELY.

4. TOPSOIL STRIPPING RELATED WORK WILL BE PAID FOR BY THE CUBIC YARD USING THE PAY ITEM: "TOPSOIL EXCAVATION AND PLACEMENT". THE QUANTITY MEASURED FOR PAYMENT IS BASED ON THE EXCAVATED TOPSOIL, NOT THE PLACED TOPSOIL. FURNISH AND PLACE TOPSOIL PAY ITEMS 4" AND 12" THICKNESS HAVE BEEN INCLUDED TO THE CONTRACT TO COVER THE ESTIMATED TOPSOIL DEFICIENCY. THE QUANTITY OF THESE ITEMS WILL BE MEASURED FOR PAYMENT ONLY AFTER ALL EXISTING TOPSOIL HAS BEEN UTILIZED. IN THE EVENT THAT THERE IS SUFFICIENT EXISTING TOPSOIL TO MEET THE NEEDS OF THE CONTRACT, THE FURNISH AND PLACE ITEMS WILL NOT BE USED AND ANY SURPLUS TOPSOIL WILL BE REMOVED FROM THE PROJECT SITE BY THE CONTRACTOR AT NO ADDITIONAL COST.

5. ALL COSTS ASSOCIATED WITH CALCULATING THE AMOUNT OF AVAILABLE TOPSOIL VERSUS THE AMOUNT OF TOPSOIL REQUIRED TO MEET PLAN AND ANY ACTION PLANS CREATED WILL NOT BE MEASURED FOR PAYMENT AND ARE INCLUDED IN THE PAY ITEM: "TOPSOIL EXCAVATION AND PLACEMENT".

6. THE AGGREGATE SUBGRADE IMPROVEMENT ROADWAY DETIAL SHEET IDENTIFIES SEVERAL AREAS WHERE AGGREGATE SUBGRADE IMPROVEMENT THICKER THAN 12" IS REQUIRED. ALL EXCAVATION REQUIRED TO PLACE THIS AGGREGATE IS CONSIDERED TO BE UNSUITABLE MATERIAL AND HAS BEEN INCLUDED IN THE QUANTITY FOR REMOVAL AND DISPOSAL OF UNSUITABLE MATERIAL. ADDITIONAL QUANTITIES OF 1,000 CY OF REMOVAL AND DISPOSAL OF UNSUITABLE MATERIAL AND 1,000 CY OF AGGREGATE SUBGRADE IMPROVEMENT HAVE BEEN PROVIDED IN THE CONTRACT FOR USE IN TREATMENT OF ANY AREAS OF POOR/SOFT SOILS NOT IDENTIFIED IN THE PLANS.

7. POND EARTHWORK IS CALCULATED BOTH BY END AREAS AND BY VOLUMES. DUE TO IMPROVED ACCURACY OF SURFACE VOLUMES, ANY ADDITIONAL EARTHWORK NOT PICKED UP BY END AREAS IS ADDED TO THE TOTAL FOR STAGE 3/3B AND 4/4B.

8. STAGE 3/3B EARTHWORK FOR SB I-39 AND STAGE 3/3B EARTHWORK FOR NB I-39 STA 12+37 TO STA 18+00 ARE INCLUDED IN EAV TABLES SHOWN ON RAMP A CROSS SECTIONS.

EARTHWORK SUMMARY			
PAY ITEM NO.	DESCRIPTION	UNIT	QUANTITY
20200100	EARTH EXCAVATION	CU YD	331,745
20201200	REMOVAL AND DISPOSAL OF UNSUITABLE MATERIAL	CU YD	18,988
20400800	FURNISHED EXCAVATION	CU YD	9,888
21101505	TOPSOIL EXCAVATION AND PLACEMENT	SQ YD	28,452
21101615	TOPSOIL FURNISH AND PLACE, 4"	SQ YD	27,747
21101645	TOPSOIL FURNISH AND PLACE, 12"	SQ YD	100
30300001	AGGREGATE SUBGRADE IMPROVEMENT	CU YD	1,000

MODEL: Default
FILE NAME: pw://benesch-pw.bentley.com:benesch-pw-01/Documents/10800s/10800,00/Eng_Docs/CAD Sheets/General/D264R71-GDI-sht-SCH-01A.dgn

benesch
Allied Benesch & Company
35 W. Wacker Drive, Suite 3300
Chicago, Illinois 60601
312-565-0450 Job No. 10800,00

USER NAME = JMajcher	DESIGNED - A.GIBSON	REVISED -	
	DRAWN - J.MAJCHER	REVISED -	
PLOT SCALE = 0.167 ' / In.	CHECKED - J.TARDY	REVISED -	
PLOT DATE = 10/27/2023	DATE - 10/13/2023	REVISED -	

STATE OF ILLINOIS
DEPARTMENT OF TRANSPORTATION

SCHEDULE OF QUANTITIES
EARTHWORK

SCALE: N/A | SHEET 2 OF 48 SHEETS | STA. $G8711 | TO STA. $H8711

F.A.* RTE.	SECTION	COUNTY	TOTAL SHEETS	SHEET NO.
*	(5)RS & (5&5HB)RC	WINNEBAGO	1279	50
		CONTRACT NO. 64R71		
	ILLINOIS FED. AID PROJECT			

* FAI ROUTE 39 (I-39) & FAP ROUTE 525 (US 20)

20100110
TREE REMOVAL (6 TO 15 UNITS DIAMETER)
80% FED / 20% STATE

ROAD	STA	OFFSET	LT/RT	UNIT	REMARKS
RAMP DA	10+69.02	194.65	RT	6	
RAMP DA	11+61.85	172.61	RT	6	
RAMP DA	11+67.08	174.51	RT	6	
RAMP DA	11+70.48	172.69	RT	6	
RAMP DA	13+46.77	114.12	RT	9	
RAMP DA	14+99.97	138.36	RT	6	
RAMP DA	16+14.63	116.14	RT	13	
RAMP DA	10+86.86	37.47	LT	12	
RAMP DA	10+96.37	32.13	LT	14	
RAMP DA	11+12.80	30.89	LT	14	
RAMP DA	11+48.16	30.67	LT	10	
RAMP DA	11+64.25	36.15	LT	6	
RAMP DA	11+64.27	36.14	LT	10	
RAMP DA	11+70.54	67.76	LT	12	
RAMP DA	11+97.84	35.84	LT	12	
RAMP BC	4+23.81	40.53	RT	8	
RAMP BC	4+83.95	32.68	RT	9	
RAMP BC	4+91.50	31.83	RT	9	
RAMP AC	3+8.11	102.60	RT	14	
RAMP AC	3+72.63	199.20	RT	9	
RAMP AC	7+58.14	40.13	LT	13	
RAMP AC	7+76.14	39.28	LT	7	
RAMP AC	7+76.50	37.42	LT	7	
RAMP AC	8+9.95	39.32	LT	8	
RAMP AC	8+38.03	40.31	LT	9	
RAMP AC	8+38.18	41.63	LT	10	
RAMP AC	8+43.19	36.36	LT	9	
RAMP AC	8+43.97	36.53	LT	8	
RAMP BD	11+41.54	144.32	RT	12	
RAMP BD	10+2.53	105.15	RT	13	
RAMP BD	9+1.10	67.96	RT	13	
RAMP BD	10+45.06	98.77	RT	10	
RAMP BD	7+34.17	30.16	LT	12	
RAMP BD	5+57.39	141.12	RT	13	
RAMP BD	2+40.33	53.00	RT	14	
RAMP BD	7+13.53	34.27	LT	7	
RAMP BD	7+18.79	33.11	LT	6	
RAMP BD	7+24.29	35.47	LT	8	
RAMP BD	7+48.81	26.44	LT	9	
RAMP BD	7+66.11	27.86	LT	9	
RAMP BD	7+80.69	29.09	LT	11	
RAMP BD	7+97.08	27.57	LT	10	
RAMP CA	6+27.59	46.24	RT	12	
RAMP AD	9+36.98	46.52	LT	11	
RAMP AD	9+62.53	44.54	LT	15	
RAMP AD	17+11.41	51.42	RT	7	
RAMP AD	17+41.35	51.75	RT	12	
RAMP AD	20+23.58	44.58	RT	12	
RAMP CB	18+40.92	132.65	RT	14	
RAMP CB	14+11.25	130.16	RT	14	
RAMP CB	13+46.31	86.58	RT	14	
RAMP CB	12+10.54	100.68	RT	15	
RAMP CB	11+59.47	119.10	RT	6	
RAMP CB	11+55.16	123.94	RT	6	
RAMP CB	11+49.02	107.01	RT	6	
RAMP CB	11+32.46	132.99	RT	6	
RAMP CB	7+38.72	151.56	RT	6	
RAMP AD	22+93.03	115.37	LT	11	
HARRISON/US 20	1327+20.78	101.26	LT	14	
HARRISON/US 20	1333+84.68	107.26	LT	10	
HARRISON/US 20	1334+99.21	88.08	LT	12	
HARRISON/US 20	1336+03.17	94.02	RT	10	
HARRISON/US 20	1336+17.41	92.55	RT	10	
HARRISON/US 20	1336+46.14	98.47	RT	10	
HARRISON/US 20	1336+87.69	108.41	RT	10	
HARRISON/US 20	1336+97.88	109.52	RT	10	
			SUBTOTAL	662	
			GRAND TOTAL	662	

20100210
TREE REMOVAL (OVER 15 UNITS DIAMETER)
80% FED / 20% STATE

ROAD	STA	OFFSET	LT/RT	UNIT	REMARKS
HARRISON AVE	137+64.61	124.88	LT	17	
HARRISON AVE	138+59.64	79.49	RT	16	
RAMP DA	15+9.75	83.32	RT	19	
RAMP DA	10+68.34	30.56	LT	19	
RAMP DA	12+85.63	92	LT	18	
RAMP DA	12+94.43	129.63	LT	18	
RAMP DA	13+13.52	142.21	LT	31	
RAMP BC	11+46.24	65.1939	LT	18	
RAMP BC	11+28.00	86.31	LT	43	
RAMP BC	10+35.76	56.12	RT	17	
RAMP BC	4+55.00	37.79	RT	26	
RAMP AC	2+16.76	97.9	RT	20	
RAMP AC	9+15.42	110.05	RT	24	
RAMP AC	8+51.44	57.38	RT	21	
RAMP AC	7+91.89	41.01	LT	18	
RAMP AC	10+37.46	90.51	LT	22	
RAMP DB	11+30.50	44.04	RT	17	
RAMP DB	9+86.50	52.73	RT	17	
RAMP CA	9+49.81	31.47	RT	16	
RAMP BD	8+74.97	117.83	RT	22	
RAMP BD	7+56.83	213.65	RT	30	
RAMP BD	7+70.00	273.72	RT	17	
RAMP CA	14+82.07	75.98	LT	36	
RAMP CA	15+2.78	105.67	LT	20	
RAMP AD	12+70.53	72.38	LT	24	
RAMP CB	12+10.54	149.43	RT	24	
RAMP CB	9+74.45	65.28	RT	24	
RAMP CB	10+17.13	144.69	RT	30	
RAMP CB	7+24.17	103.36	RT	36	
RAMP CB	11+39.96	118.34	RT	24	
RAMP AD	20+64.95	46.65	RT	16	
HARRISON AVE	1333+31.65	107.44	LT	16	
		SUBTOTAL		716	
		GRAND TOTAL		716	

20100500
TREE REMOVAL, ACRES
80% FED / 20% STATE

ROAD	STA	OFFSET	STA	OFFSET	ACRE	REMARKS
HARRISON AVE	1327+32.66	RT	1328+00.35	RT	0.01	
HARRISON AVE	1328+34.66	RT	1331+28.45	RT	0.03	
HARRISON AVE	1331+28.45	RT	1332+12.20	RT	0.01	
HARRISON AVE	1332+87.70	RT	1333+19.03	RT	0.00	
HARRISON AVE	1336+31.41	RT	1337+09.27	RT	0.01	
RAMP AD	12+81.76	RT	13+10.09	RT	0.01	
RAMP AD	20+93.21	RT	23+62.88	RT	0.18	
RAMP BC	5+96.10	RT	6+37.87	RT	0.07	
RAMP BC	7+60.16	RT	9+13.26	RT	0.06	
RAMP BC	12+73.44	RT	15+71.35	RT	0.12	
RAMP BC	15+86.38	RT	16+23.81	RT	0.12	
RAMP CA	5+28.45	RT	8+24.54	RT	0.17	
RAMP CA	10+40.06	RT	20+42.91	RT	1.55	
RAMP CA	10+97.26	LT	11+2.74	LT	0.02	
Ramp BC	18+50	LT	18+02	LT	0.07	
				SUBTOTAL	2.43	
				GRAND TOTAL	2.50	

NOTES: TOTAL ACREAGE ROUNDED TO NEAREST 0.25

40600982
HOT-MIX ASPHALT SURFACE REMOVAL - BUTT JOINT
80% FED / 20% STATE

ROAD	STA	STA	LT/RT	SQ YD	REMARKS
HARRISON AVE	123+45.00	123+50.00	LT & RT	43	
			SUBTOTAL	43	
			GRAND TOTAL	43	

44000100
PAVEMENT REMOVAL
80% FED / 20% STATE

ROAD	STA	STA	DESCRIPTION	SQ YD	REMARKS
HARRISON AVE	1311+23.61	1334+04.55	EX HARRISON PAVT	6,297	
HARRISON AVE	1311+23.61	1334+04.55	EX HARRISON PAVT	6,552	
HARRISON AVE	1334+04.55	1338+00	EX HARRISON PAVT	3,426	
HARRISON AVE	123+50.00	126+24.86	EX HARRISON PAVT	2,360	
HARRISON AVE	126+24.86	131+00	EX HARRISON PAVT	4,372	
HARRISON AVE	131+00	153+19.06	EX HARRISON PAVT	6,473	
HARRISON AVE	131+00	153+19.06	EX HARRISON PAVT	6,216	
RAMP AC	4+49.53	15+97.32	EX RAMP AC PAVT	2,013	
RAMP AD	3+25.75	29+57.41	EX RAMP AD PAVT	4,486	
RAMP BC	4+14.67	25+04.72	EX RAMP BC PAVT	3,265	
RAMP BD	4+46.76	15+92.71	EX RAMP BD PAVT	1,887	
RAMP CA	2+73.48	19+22.53	EX RAMP CA PAVT	3,252	
RAMP CB	0+18.24	16+78.17	EX RAMP CB PAVT	2,858	
RAMP DA	0+18.14	15+34.46	EX RAMP DA PAVT	2,425	
RAMP DB	3+04.04	27+61.77	EX RAMP DB PAVT	4,249	
I-39	2731+34.48	2737+19.61	EX I-39 SB PAVT	1,526	
I-39	2729+35.00	2745+45.84	EX I-39 NB PAVT	4,263	
I-39	2731+34.93	2745+96.91	EX I-39 SB PAVT	3,828	
SOUTH MALL DR	298+49.09	299+60.43		1,161	
SOUTH MALL DR	300+40.52	303+37.00		2,612	
			SUBTOTAL	73,520	
			GRAND TOTAL	73,520	

NOTE: AREA MEASURED IN CADD.

44000200
DRIVEWAY PAVEMENT REMOVAL
80% FED / 20% STATE

ROAD	STA	STA	LT/RT	SQ YD	REMARKS
HARRISON AVE	134+68.26	134+99.87	LT	61	
			SUBTOTAL	61	
			GRAND TOTAL	61	

NOTE: AREA MEASURED IN CADD.

44000500
COMB CURB & GUTTER REMOVAL
80% FED / 20% STATE

ROAD	STA	LT/RT	STA	LT/RT	FOOT	REMARKS
HARRISON AVE	1337+96.47	RT	1338+31.50	RT	94	
HARRISON AVE	1338+95.28	RT	1339+29.94	RT	72	
HARRISON AVE	127+39.98	LT	128+62.31	LT	126	
SOUTH MALL DR	298+49.09	RT	299+60.43	LT	277	
SOUTH MALL DR	300+40.52	RT	303+37.00	LT	617	
				SUBTOTAL	1,186	
				GRAND TOTAL	1,186	

44001980
CONCRETE BARRIER REMOVAL
80% FED / 20% STATE

ROAD	STA	LT/RT	STA	LT/RT	FOOT	REMARKS
HARRISON AVE	1311+23.61	CENTER	1334+04.55	CENTER	2,292	
HARRISON AVE	132+41.54	CENTER	153+19.06	CENTER	2,067	
I-39	2731+35.20	RT	2736+58.35	RT	524	
				SUBTOTAL	4,883	
				GRAND TOTAL	4,883	

44000157
HOT-MIX ASPHALT SURFACE REMOVAL, 2"
80% FED / 20% STATE

ROAD	STA	STA	AREA (SF)	SQ YD	REMARKS
SOUTH MALL DR	297+42.70	298+49.09	14173.00	1575	
			SUBTOTAL	1,575	
			GRAND TOTAL	1,575	

44003100
MEDIAN REMOVAL
80% FED / 20% STATE

ROAD	STA	STA	LT/RT	SQ FT	REMARKS
HARRISON AVE	116+37.73	123+50.00	LT & RT	6,323	
HARRISON AVE	123+50.00	125+80.70	LT	1,417	
SOUTH MALL DR	300+39.00	303+37.00	CL	1,758	
			SUBTOTAL	9,498	
			GRAND TOTAL	9,498	

44004000
PAVED DITCH REMOVAL
80% FED / 20% STATE

ROAD	STA	OFFSET	LT/RT	STA	OFFSET	LT/RT	FOOT	REMARKS
PR US 20/HARRISON AVE	1334+51.32	62.65	RT	1337+22.22	112.61	RT	277	
						SUBTOTAL	277	
						GRAND TOTAL	277	

63200310
GUARDRAIL REMOVAL
80% FED / 20% STATE

ROAD	STA	LT/RT	STA	LT/RT	FOOT	REMARKS
PR US 20/HARRISON AVE	1311+30.37	LT	1311+62.09	LT	31	
PR US 20/HARRISON AVE	1312+19.08	LT	1314+57.61	LT	293	
PR US 20/HARRISON AVE	1311+27.76	RT	1312+18.80	RT	102	
PR US 20/HARRISON AVE	1337+61.35	RT	1337+59.41	RT	289	
HARRISON AVE	152+58.11	LT	152+70.02	LT	67	
HARRISON AVE	149+78.97	RT	152+24.61	RT	304	
HARRISON AVE	152+78.58	RT	153+12.40	RT	34	
				SUBTOTAL	1,120	
				GRAND TOTAL	1,120	

X4400196
HOT-MIX ASPHALT SURFACE REMOVAL, SPECIAL
80% FED / 20% STATE

ROAD	STA	STA	LENGTH (FT)	OFFSET	AREA (SQ YD)	REMARKS
SOUTH MALL DR	298+49.09	299+55.43	106.334	CL	6	0.5" WIDE
SOUTH MALL DR	298+49.09	299+55.43	293.67	LT	16	0.5" WIDE
SOUTH MALL DR	298+49.09	299+55.43	299.46	RT	17	0.5" WIDE
SOUTH MALL DR	300+27.94	303+37.00	743.057	LT	41	0.5" WIDE
SOUTH MALL DR	300+45.86	303+37.00	771.486	RT	43	0.5" WIDE
				SUBTOTAL	123	
				GRAND TOTAL	123	

44004250
PAVED SHOULDER REMOVAL
80% FED / 20% STATE

ROAD	STA	STA	DESCRIPTION	SQ YD	REMARKS
HARRISON AVE	1312+58.45	1338+00	EX HARRISON SHOULDER	5,143	
HARRISON AVE	1313+67.96	1338+00	EX HARRISON SHOULDER	5,218	
HARRISON AVE	123+50.00	125+10.32	EX HARRISON SHOULDER	50	
HARRISON AVE	123+50.00	125+08.13	EX HARRISON SHOULDER	94	
HARRISON AVE	127+64.73	150+74.67	EX HARRISON SHOULDER	2,667	
HARRISON AVE	127+30.67	152+13.87	EX HARRISON SHOULDER	2,552	
HARRISON AVE	131+00	153+19.06	EX HARRISON SHOULDER	2,181	
HARRISON AVE	131+00	153+19.06	EX HARRISON SHOULDER	2,148	
RAMP AC	4+49.53	12+47.89	EX EAMP AC SHOULDER	444	
RAMP AC	4+49.53	15+97.32	EX EAMP AC SHOULDER	1,204	
RAMP AD	6+04.83	25+95.22	EX EAMP AD SHOULDER	1,016	
RAMP AD	3+25.75	29+57.41	EX EAMP AD SHOULDER	2,805	
RAMP BC	6+33.46	25+04.68	EX EAMP BC SHOULDER	1,871	
RAMP BC	6+33.54	23+29.74	EX EAMP BC SHOULDER	1,041	
RAMP BD	4+46.76	12+37.55	EX EAMP BD SHOULDER	523	
RAMP BD	4+46.76	15+92.71	EX EAMP BD SHOULDER	1,312	
RAMP CA	5+52.78	19+22.53	EX EAMP CA SHOULDER	667	
RAMP CA	2+73.48	24+09.60	EX EAMP CA SHOULDER	2,248	
RAMP CB	03+97.29	16+78.17	EX EAMP CB SHOULDER	617	
RAMP CB	0+18.24	16+78.17	EX EAMP CB SHOULDER	1,835	
RAMP DA	03+25.11	15+34.46	EX EAMP DA SHOULDER	806	
RAMP DA	0+18.14	15+34.46	EX EAMP DA SHOULDER	1,671	
RAMP DB	3+04.04	22+61.58	EX EAMP DB SHOULDER	795	
RAMP DB	3+04.04	27+61.77	EX EAMP DB SHOULDER	2,122	
I-39	2729+14.92	2745+22.39	EX I-39 SHOULDER	3,522	
I-39	2731+34.28	2735+36.93	EX I-39 SHOULDER	485	
I-39	2731+34.78	2737+34.79	EX I-39 SHOULDER	451	
I-39	2737+21.30	2745+97.29	EX I-39 SHOULDER	846	
I-39	2737+21.30	2739+38.78	EX I-39 SHOULDER	74	
I-39	2737+34.76	2753+88.86	EX I-39 SHOULDER	1,680	
I-39	2742+03.89	2745+97.95	EX I-39 SHOULDER	169	
I-39	2745+97.20	2747+00.00	EX I-39 SHOULDER	67	
			SUBTOTAL	48,324	

100% TOLLWAY

ROAD	STA	STA	DESCRIPTION	SQ YD	REMARKS
I-39	2747+00.00	2751+62.78	LT SHOULDER	297	
			SUBTOTAL	297	
			GRAND TOTAL	48,621	

NOTE: AREA MEASURED IN CADD.

Z0022800
FENCE REMOVAL
80% FED / 20% STATE

ROAD	STA	OFFSET	LT/RT	STA	OFFSET	LT/RT	FOOT	REMARKS
HARRISON	1324+30.19	124.7	RT	1328+50.91	111.7	RT	488	
EX I-39	2737+49.11	135	LT	2737+64.06	100	LT	38	
EX I-39	2737+64.06	100	LT	2470+50.00	100	LT	286	
						SUBTOTAL	812	
						GRAND TOTAL	812	

X6430120
REMOVE IMPACT ATTENUATORS, NO SALVAGE
80% FED / 20% STATE

ROAD	STA	LT/RT	EACH
HARRISON AVE	132+41.00	CENTER	1
PR US 20/HARRISON AVE	1334+05.00	CENTER	1
		SUBTOTAL	2
		GRAND TOTAL	2

X6431110
REMOVE ATTENUATOR BASE
80% FED / 20% STATE

ROAD	STA	LT/RT	EACH
HARRISON AVE	132+41.00	CENTER	1
PR US 20/HARRISON AVE	1334+05.00	CENTER	1
		SUBTOTAL	2
		GRAND TOTAL	2

X4402805
ISLAND REMOVAL
80% FED / 20% STATE

ROAD	STA	STA	OFFSET	AREA (SQ FT)	REMARKS
SOUTH MALL DR	299+28.01	299+58.67	LT	489	
SOUTH MALL DR	299+32.59	299+60.16	RT	542	
SOUTH MALL DR	300+39.09	300+62.46	LT	332	
SOUTH MALL DR	300+41.66	300+67.17	RT	375	
			SUBTOTAL	1,739	
			GRAND TOTAL	1,739	

25000750 MOWING 80% FED / 20% STATE					
ROAD	STA	STA	LT/RT	ACRE	REMARKS
Prestage					
HARRISON	119+27.00	125+56.00	LT	0.42	
HARRISON	127+06.00	128+62.00	LT	0.04	
HARRISON	130+04.00	144+76.00	LT	0.84	
HARRISON	140+72.00	141+07.00	RT	0.03	
HARRISON	144+38.00	148+01.00	LT	0.23	
HARRISON	147+03.00	147+87.00	LT	0.20	
HARRISON	148+16.00	148+64.00	LT	0.02	
HARRISON	148+36.00	152+70.00	LT	0.22	
US 20/HARRISON	1312+18.00	1313+81.00	LT	0.04	
US 20/HARRISON	1315+06.00	1316+92.00	LT	0.08	
US 20/HARRISON	1315+21.00	1317+35.00	RT	0.31	
US 20/HARRISON	1316+19.00	1316+97.00	RT	0.21	
US 20/HARRISON	1317+07.00	1324+28.00	LT	0.81	
US 20/HARRISON	1327+57.00	1327+93.00	LT	0.03	
US 20/HARRISON	1330+84.98	1338+33.20	LT	0.53	
US 20/HARRISON	1339+78.00	1342+18.00	LT	0.21	
Stage 1					
HARRISON	122+66.00	125+87.00	RT	0.57	
MALL DRIVE	297+35.00	297+85.00	LT/RT	0.02	
MALL DRIVE	300+48.00	303+00.00	LT	0.03	
MALL DRIVE	300+56.00	303+00.00	RT	0.05	
HARRISON	126+52.00	130+29.00	RT	0.48	
HARRISON	126+99.00	135+92.00	RT	0.56	
HARRISON	143+38.00	145+70.00	RT	0.08	
HARRISON	144+55.00	148+18.00	RT	0.37	
HARRISON	148+15.00	152+26.04	RT	0.23	
US 20/HARRISON	1311+70.06	1316+33.50	RT	0.23	
US 20/HARRISON	1316+70.00	1320+50.00	RT	0.44	
US 20/HARRISON	1332+28.00	1338+44.00	RT	0.29	
US 20/HARRISON	1338+93.96	1340+66.04	RT	0.02	
Stage 1B					
HARRISON	135+92.00	140+70.00	RT	0.40	
US 20/HARRISON	1316+52.00	1318+01.00	RT	0.08	
US 20/HARRISON	1321+67.00	1332+27.00	RT	0.25	
Stage 2					
HARRISON	127+13.00	138+99.00	LT	0.50	
HARRISON	141+91.00	142+11.00	LT	0.01	
HARRISON	144+21.00	145+47.00	LT	0.03	
HARRISON	145+45.00	147+98.00	LT	0.18	
HARRISON	151+36.00	152+71.51	LT	0.10	
US 20/HARRISON	1312+16.91	1315+31.00	LT	0.88	
US 20/HARRISON	1317+08.00	1317+76.00	LT	0.03	
US 20/HARRISON	1318+03.00	1324+29.00	LT	0.36	
US 20/HARRISON	1327+00.00	1338+00.00	LT	0.58	
Stage 2B					
HARRISON	130+60.00	134+60.00	LT	0.06	
HARRISON	130+60.00	134+62.00	LT	0.02	
HARRISON	134+81.00	140+13.00	LT	0.18	
HARRISON	134+93.00	145+27.00	LT	1.31	
HARRISON	148+42.00	153+08.00	LT	2.59	
US 20/HARRISON	1314+89.00	1316+04.00	LT	0.06	
US 20/HARRISON	1316+09.00	1316+91.00	LT	0.09	
US 20/HARRISON	1318+25.00	1323+80.14	LT	0.24	
US 20/HARRISON	1318+25.00	1324+51.07	LT	0.24	
US 20/HARRISON	1332+43.00	1338+00.00	LT	0.97	
I-39 NB	04+55.34	06+27.05	LT	0.04	
I-39 NB	08+51.28	14+83.00	LT	0.09	
I-39 NB	15+23.00	24+53.00	LT	0.27	
I-39 SB	1302+89.00	1308+50.00	LT	0.13	
I-39 SB	1308+09.00	1311+19.00	LT	0.07	
I-39 SB	1311+19.00	1319+95.00	LT	0.22	

25000750 MOWING 80% FED / 20% STATE					
ROAD	STA	STA	LT/RT	ACRE	REMARKS
Stage 3					
HARRISON	123+50.00	125+88.00	RT	0.58	
HARRISON	126+52.00	130+28.29	RT	0.48	
HARRISON	127+00.00	148+32.00	RT	4.45	
HARRISON	145+06.64	146+07.18	LT	0.04	
HARRISON	148+65.00	152+31.00	RT	1.16	
US 20/HARRISON	1312+18.00	1315+18.00	LT	0.47	
US 20/HARRISON	1313+30.92	1314+93.93	LT	0.07	
US 20/HARRISON	1315+44.00	1332+43.00	LT	3.47	
US 20/HARRISON	1316+57.00	1318+25.00	LT	0.17	
US 20/HARRISON	1318+38.55	1321+45.48	RT	0.13	
US 20/HARRISON	1321+69.66	1338+00.00	RT	1.71	
US 20/HARRISON	1323+93.00	1332+43.00	LT	0.20	
NB I-39	17+53.00	21+99.00	RT	0.41	
RAMP A	102+40.00	114+77.00	RT	4.11	
RAMP A	102+40.00	107+23.00	LT	1.25	
RAMP D	402+19.00	416+33.00	RT	4.70	
RAMP D	413+16.00	414+56.00	RT	0.14	
RAMP D	402+33.00	411+44.00	LT	2.93	
Stage 3B					
I-39 NB	641	2200.00	LT	0.78	
I-39 SB	1311+18.00	1319+95.00	RT	0.80	
Stage 4					
HARRISON	144+86.00	145+74.00	LT	0.05	
HARRISON	144+62.05	147+79.00	LT	0.53	
US 20/HARRISON	1311+79.00	1315+18.00	RT	0.41	
US 20/HARRISON	1315+59.00	1316+60.00	RT	0.09	
RAMP B	214+11.00	226+37.00	RT	4.15	
RAMP B	216+00.00	225+74.00	LT	3.94	
RAMP C	306+69.00	317+65.00	LT	3.55	
RAMP C	307+53.53	317+96.02	RT	3.92	
Stage 4B					
HARRISON	142+98.88	147+93.07	LT	0.24	
HARRISON	142+99.33	148+48.55	LT	1.31	
US 20/HARRISON	1316+09.00	1324+64.00	RT	1.41	
I-39 SB	1315+22.00	1319+95.00	LT	0.48	
RAMP B	209+60.00	226+37.00	RT	2.51	
RAMP C	300+00.00	304+04.00	RT	0.43	
RAMP C	304+04.00	317+39.00	RT	1.66	
			GRAND TOTAL	71	

25100900 TURF REINFORCEMENT MAT 80% FED / 20% STATE					
ROAD	STA	STA	LT/RT	SQ YD	REMARKS
Stage 3					
RAMP D	413+16.00	414+56.00	RT	691	
			SUBTOTAL	692	
			GRAND TOTAL	692	

28000500 INLET AND PIPE PROTECTION 80% FED / 20% STATE				
ROAD	STA	OFFSET	EACH	REMARKS
Prestage				
HARRISON	122+03.00	-64.5	1	
HARRISON	139+51	-82.5	1	
HARRISON	150+18	-91.1	1	
HARRISON	152+34	-81.7	1	
US 20/HARRISON	1323+29	-80.2	1	
US 20/HARRISON	1335+40	-103.8	1	
Stage 1				
HARRISON	123+23.52	56.5	1	
HARRISON	126+85	151.3	1	
HARRISON	127+92	98.4	1	
HARRISON	128+21	97.2	1	
HARRISON	144+00	57.7	1	
US 20/HARRISON	1317+10	67.6	1	
US 20/HARRISON	1317+10	87.2	1	
US 20/HARRISON	1317+77	76.7	1	
US 20/HARRISON	1338+09	121.8	1	
Stage 2				
HARRISON	152+34	-81.4	1	
HARRISON	1313+46	-126.4	1	
HARRISON	1313+66	-129.2	1	
HARRISON	1335+33	-115.0	1	
Stage 2B				
HARRISON	139+35	-136.5	1	
HARRISON	139+52	-93.8	1	
HARRISON	140+00	-88.8	1	
HARRISON	140+45	-155.0	1	
HARRISON	142+00	-109.0	1	
HARRISON	143+00	-113.0	1	
HARRISON	150+33	-144.3	1	
Stage 3				
RAMP A	102+50	57.6	1	
RAMP D	403+01	-97.3	1	
RAMP D	404+99	132.8	1	
Stage 4				
HARRISON	147+40	-209.0	1	
US 20/HARRISON	1312+37	93.9	1	
US 20/HARRISON	1312+69	86.0	1	
RAMP B	219+00	35.5	1	
RAMP B	225+00	36.5	1	
RAMP C	316+00	64.7	1	
			SUBTOTAL	35	
			GRAND TOTAL	35	

28000315 AGGREGATE DITCH CHECKS 80% FED / 20% STATE										
ROAD	STA	OFFSET	DITCH WIDTH	DITCH CHECK HEIGHT (FT)	TOP WIDTH (FT)	BOTTOM WIDTH (FT)	VOLUME (CY)	UNIT WEIGHT (TON/CY)	TON	REMARKS
Stage 1										
US 20/HARRISON	1335+54	82.5	2.0	1.5	2.0	8.0	0.4	1.8	0.7	
US 20/HARRISON	1336+02	84.3	2.0	1.5	2.0	8.0	0.4	1.8	0.7	
US 20/HARRISON	1336+51	96.0	2.0	1.5	2.0	8.0	0.4	1.8	0.7	
US 20/HARRISON	1337+00	107.7	2.0	1.5	2.0	8.0	0.4	1.8	0.7	
Stage 3										
US 20/HARRISON	1335+51	82.1	4.0	1.5	2.0	8.0	0.7	1.8	1.3	
US 20/HARRISON	1336+01	91.5	4.0	1.5	2.0	8.0	0.7	1.8	1.3	
US 20/HARRISON	1336+49.8	100.9	4.0	1.5	2.0	8.0	0.7	1.8	1.3	
US 20/HARRISON	1336+99	111.0	4.0	1.5	2.0	8.0	0.7	1.8	1.3	
US 20/HARRISON	1337+49	117.8	4.0	1.5	2.0	8.0	0.7	1.8	1.3	
								SUBTOTAL	10	
								GRAND TOTAL	10	

NOTE: SEE DRAINAGE SCHEDULES FOR ADDITIONAL QUANTITY.

benesch
Allied Benesch & Company
35 W. Wacker Drive, Suite 3300
Chicago, Illinois 60601
3124654150 Job No. 10800.00

USER NAME = agibson	DESIGNED - A.GIBSON	REVISED -	STATE OF ILLINOIS DEPARTMENT OF TRANSPORTATION	SCHEDULE OF QUANTITIES EROSION AND SEDIMENT CONTROL
	DRAWN - J.MAJCHER	REVISED -		
PLOT SCALE = 0.167 ' / in.	CHECKED - J.TARDY	REVISED -		SCALE: N/A SHEET 5 OF 48 SHEETS STA. TO STA.
PLOT DATE = 10/27/2023	DATE - 10/13/2023	REVISED -		

F.A.* RTE.	SECTION	COUNTY	TOTAL SHEETS	SHEET NO.
*	(5)RS & (5&5HB)RC	WINNEBAGO	1279	53
		CONTRACT NO. 64R71		
	ILLINOIS	FED. AID PROJECT		

* FAI ROUTE 39 (I-39) & FAP ROUTE 525 (US 20)

MODEL: Default
FILE NAME: pw:\benesch-pw.bentley.com:benesch-pw-01\Documents\10800s\10800.00\Eng. Docs\CAD Sheets\General\D7264R71-DDI-sht-SCH-04.dgn

28000250
TEMPORARY EROSION CONTROL SEEDING
80% FED / 20% STATE

ROAD	STA	STA	LT/RT	ACRE	APPLICATION RATE (LBS/ ACRE)	POUND	REMARKS
Prestage							
HARRISON	119+27	125+56	LT	0.42	100.00	42.23	
HARRISON	127+06	128+62	LT	0.04	100.00	3.98	
HARRISON	130+04	144+76	LT	0.84	100.00	84.43	
HARRISON	140+72	141+07	RT	0.03	100.00	2.88	
HARRISON	144+38	148+01	LT	0.23	100.00	23.08	
HARRISON	147+03	147+87	LT	0.20	100.00	20.08	
HARRISON	148+16	148+64	LT	0.02	100.00	1.71	
HARRISON	148+36	152+70	LT	0.22	100.00	21.68	
US 20/HARRISON	1312+18	1313+81	LT	0.04	100.00	4.30	
US 20/HARRISON	1315+06	1316+92	LT	0.08	100.00	8.02	
US 20/HARRISON	1315+21	1317+35	RT	0.31	100.00	30.90	
US 20/HARRISON	1316+19	1316+97	RT	0.21	100.00	21.46	
US 20/HARRISON	1317+07	1324+28	LT	0.81	100.00	80.52	
US 20/HARRISON	1327+57	1327+93	LT	0.03	100.00	2.86	
US 20/HARRISON	1330+85	1338+33	LT	0.53	100.00	52.67	
US 20/HARRISON	1339+78	1342+18	LT	0.21	100.00	21.15	
Stage 1							
MALL DRIVE	297+35	297+85	LT/RT	0.02	100.00	2.29	
MALL DRIVE	300+48	303+00	LT	0.03	100.00	3.26	
MALL DRIVE	300+56	303+00	RT	0.05	100.00	5.14	
HARRISON	122+66	125+87	RT	0.57	100.00	56.92	
HARRISON	126+52	130+29	RT	0.48	100.00	47.80	
HARRISON	126+99	135+92	RT	0.56	100.00	55.70	
HARRISON	143+38	145+70	RT	0.08	100.00	8.17	
HARRISON	144+55	148+18	RT	0.37	100.00	36.77	
HARRISON	148+15	152+26	RT	0.23	100.00	22.62	
US 20/HARRISON	1311+70	1316+34	RT	0.23	100.00	22.72	
US 20/HARRISON	1316+70	1320+50	RT	0.44	100.00	43.62	
US 20/HARRISON	1332+28	1338+44	RT	0.29	100.00	28.89	
US 20/HARRISON	1338+94	1340+66	RT	0.02	100.00	2.36	
Stage 1B							
HARRISON	135+92	140+70	RT	0.40	100.00	40.24	
US 20/HARRISON	1316+52	1318+01	RT	0.08	100.00	7.89	
US 20/HARRISON	1321+67	1332+27	RT	0.25	100.00	25.34	
Stage 2							
HARRISON	127+13	138+99	LT	0.50	100.00	49.96	
HARRISON	141+91	142+11	LT	0.01	100.00	1.35	
HARRISON	144+21	145+47	LT	0.03	100.00	2.80	
HARRISON	145+45	147+98	LT	0.18	100.00	17.65	
HARRISON	151+36	152+72	LT	0.10	100.00	9.58	
US 20/HARRISON	1312+17	1315+31	LT	0.88	100.00	87.83	
US 20/HARRISON	1317+08	1317+76	LT	0.03	100.00	2.61	
US 20/HARRISON	1318+03	1324+29	LT	0.36	100.00	35.88	
US 20/HARRISON	1327+00	1338+00	LT	0.58	100.00	58.25	
Stage 2B							
HARRISON	130+60	134+60	LT	0.06	100.00	6.30	
HARRISON	130+60	134+62	LT	0.02	100.00	2.40	
HARRISON	134+81	140+13	LT	0.18	100.00	18.09	
HARRISON	134+93	145+27	LT	1.31	100.00	131.12	
HARRISON	148+42	153+08	LT	2.59	100.00	258.78	
US 20/HARRISON	1314+81	1316+04	LT	0.06	100.00	5.67	
US 20/HARRISON	1316+09	1316+91	LT	0.09	100.00	8.63	
US 20/HARRISON	1318+25	1323+80	LT	0.24	100.00	23.96	
US 20/HARRISON	1318+25	1324+51	LT	0.24	100.00	23.68	
US 20/HARRISON	1332+43	1338+00	LT	0.97	100.00	96.86	
I-39 NB	4+55	6+27	LT	0.04	100.00	3.65	
I-39 NB	8+51	14+83	LT	0.09	100.00	9.48	
I-39 NB	15+23	24+53	LT	0.27	100.00	26.71	
I-39 SB	1302+89	1308+50	LT	0.13	100.00	12.73	
I-39 SB	1308+09	1311+19	LT	0.07	100.00	7.13	

28000250
TEMPORARY EROSION CONTROL SEEDING
80% FED / 20% STATE

ROAD	STA	STA	LT/RT	ACRE	APPLICATION RATE (LBS/ ACRE)	POUND	REMARKS
Stage 3							
HARRISON	123+50	125+88	RT	0.58	100.00	57.75	
HARRISON	126+52	130+28	RT	0.48	100.00	47.79	
HARRISON	127+00	148+32	RT	4.45	100.00	445.42	
HARRISON	145+07	146+07	LT	0.04	100.00	4.39	
HARRISON	148+65	152+31	RT	1.16	100.00	115.93	
US 20/HARRISON	1312+18	1315+18	LT	0.47	100.00	46.68	
US 20/HARRISON	1313+31	1314+94	LT	0.07	100.00	6.72	
US 20/HARRISON	1315+44	1332+43	LT	3.47	100.00	346.71	
US 20/HARRISON	1316+57	1318+25	LT	0.17	100.00	16.94	
US 20/HARRISON	1318+39	1321+45	RT	0.13	100.00	13.14	
US 20/HARRISON	1321+70	1338+00	RT	1.71	100.00	170.76	
US 20/HARRISON	1323+93	1332+43	LT	0.20	100.00	19.50	
I-39 NB	17+53	21+99	RT	0.41	100.00	41.35	
I-39 SB	1311+19	1319+95	LT	0.22	100.00	22.42	
RAMP A	102+40	114+77	RT	4.11	100.00	411.43	
RAMP A	102+40	107+23	LT	1.25	100.00	125.31	
RAMP D	402+19	416+33	RT	4.70	100.00	469.59	
RAMP D	402+33	411+44	LT	2.93	100.00	293.39	
RAMP D	413+16	414+56	RT	0.14	100.00	14.28	
Stage 3B							
I-39 NB	6+41	22+00	LT	0.78	100.00	78.35	
I-39 SB	1311+18	1319+95	RT	0.80	100.00	79.50	
Stage 4							
HARRISON	144+86	145+74	LT	0.05	100.00	5.31	
HARRISON	144+62	147+79	LT	0.53	100.00	53.09	
US 20/HARRISON	1311+79	1315+18	RT	0.41	100.00	41.00	
US 20/HARRISON	1315+59	1316+60	RT	0.09	100.00	9.40	
RAMP B	214+11	226+37	RT	4.15	100.00	415.49	
RAMP B	216+00	225+74	LT	3.94	100.00	394.23	
RAMP C	306+69	317+65	LT	3.55	100.00	354.86	
RAMP C	307+54	317+96	RT	3.92	100.00	392.04	
Stage 4B							
HARRISON	142+99	147+93	LT	0.24	100.00	23.54	
HARRISON	142+99	148+49	LT	1.31	100.00	130.50	
US 20/HARRISON	1316+09	1324+64	RT	1.41	100.00	140.73	
I-39 SB	1315+22	1319+95	LT	0.48	100.00	47.73	
RAMP B	209+60	226+37	RT	2.51	100.00	250.51	
RAMP C	300+00	304+04	RT	0.43	100.00	43.20	
RAMP C	304+04	317+39	RT	1.66	100.00	166.05	
					SUBTOTAL	7,030	
					GRAND TOTAL	7,030	

Z0013797
STABILIZED CONSTRUCTION ENTRANCE
80% FED / 20% STATE

ROAD	STA	OFFSET	SQ YD	REMARKS
PRESTAGE				
HARRISON	119+46.00	-41.0	112	
HARRISON	145+31	-151.6	112	
HARRISON	146+01	-171.4	112	
HARRISON	148+06	-216.7	112	
US 20/HARRISON	1315+10	-90.8	112	
US 20/HARRISON	1319+87	-248.6	112	
US 20/HARRISON	1328+80	-66.3	112	
US 20/HARRISON	1343+05	-48.7	112	
STAGE 1				
HARRISON	137+38	44.9	112	
HARRISON	147+03	309.3	112	
US 20/HARRISON	1317+82	306.0	112	
US 20/HARRISON	1324+10	62.1	112	
US 20/HARRISON	1343+09	48.2	112	
STAGE 1B				
HARRISON	144+25	118.6	112	
US 20/HARRISON	1320+74	110.8	112	
STAGE 2				
HARRISON	141+32	-60.1	112	
HARRISON	148+74	-124.8	112	
US 20/HARRISON	1316+96	-326.3	112	
US 20/HARRISON	1321+34	-165.0	112	
US 20/HARRISON	1325+33	-90.8	112	
STAGE 2B				
PR I-39	2733+07	-125.8	112	
PR I-39	2747+60	-43.5	112	
PR I-39	2749+48	225.1	112	
US 20/HARRISON	1338+50	-96.9	112	
HARRISON	146+29	-283.6	112	
HARRISON	147+83	-275.2	112	
STAGE 3				
HARRISON	146+53	64.6	112	
HARRISON	149+91	73.8	112	
PR I-39	2744+62	218.3	112	
Stage 3B				
PR I-39	2744+63	152.0	112	
STAGE 4				
RAMP B	221+12	187.7	112	
RAMP C	309+69	96.4	112	
STAGE 4B				
PR I-39	2746+64	-45.4	112	
RAMP B	220+58	12.0	112	
		SUBTOTAL	3,808	
		GRAND TOTAL	3,808	

MODEL: Default
FILE NAME: pw://benesch-pw.bentley.com:benesch-pw-03/Documents/10800s/10800s/10800,00/Eng_Docs/CAD_Sheets/General/M026R71-DDI-sht-SCH-05.dgn

benesch
Alfred Benesch & Company
35 W. Wacker Drive, Suite 3300
Chicago, Illinois 60601
312-565-0450 Job No. 10800,00

USER NAME = mtoney	DESIGNED - A.GIBSON	REVISED -	
	DRAWN - J.MAJCHER	REVISED -	
PLOT SCALE = 0.167 ' / in.	CHECKED - J.TARDY	REVISED -	
PLOT DATE = 10/13/2023	DATE - 10/13/2023	REVISED -	

STATE OF ILLINOIS
DEPARTMENT OF TRANSPORTATION

SCHEDULE OF QUANTITIES
EROSION AND SEDIMENT CONTROL

SCALE: N/A | SHEET 6 OF 48 SHEETS | STA. | TO STA.

F.A.* RTE.	SECTION	COUNTY	TOTAL SHEETS	SHEET NO.
*	(5)RS & (5&5HB)RC	WINNEBAGO	1279	54
		CONTRACT NO. 64R71		
	ILLINOIS	FED. AID PROJECT		

* FAI ROUTE 39 (I-39) & FAP ROUTE 525 (US 20)

28000305
TEMPORARY DITCH CHECKS
80% FED / 20% STATE

ROAD	STA	OFFSET	DITCH WIDTH	SIDE SLOPE	FOOT	REMARKS
Prestage						
HARRISON	120+38	-79.2	4.0	33%	7.0	
HARRISON	121+10	-75.3	4.0	33%	7.0	
HARRISON	121+82	-73.0	8.0	33%	11.0	
HARRISON	122+32	-74.9	8.0	33%	11.0	
HARRISON	123+04	-75.6	8.0	33%	11.0	
HARRISON	123+76	-79.2	8.0	33%	11.0	
HARRISON	135+97	-68.1	2.0	33%	5.0	
HARRISON	136+47	-74.0	2.0	33%	5.0	
HARRISON	137+06	-72.6	2.0	33%	5.0	
HARRISON	137+56	-73.8	2.0	33%	5.0	
HARRISON	138+05	-77.0	2.0	33%	5.0	
HARRISON	138+55	-82.0	2.0	33%	5.0	
HARRISON	139+04	-87.0	2.0	33%	5.0	
HARRISON	139+60	-92.9	2.0	33%	5.0	
HARRISON	140+04	-98.0	2.0	33%	5.0	
HARRISON	140+52	-100.4	2.0	33%	5.0	
HARRISON	140+99	-82.3	2.0	33%	5.0	
HARRISON	141+54	-78.2	2.0	33%	5.0	
HARRISON	142+04	-79.7	2.0	33%	5.0	
HARRISON	142+54	-79.1	2.0	33%	5.0	
HARRISON	143+04	-78.0	2.0	33%	5.0	
HARRISON	150+56	-86.5	2.0	33%	5.0	
HARRISON	151+32	-84.1	2.0	33%	5.0	
HARRISON	152+08	-80.6	2.0	33%	5.0	
US 20/HARRISON	1313+51	-74.6	2.0	33%	5.0	
US 20/HARRISON	1331+03	-77.3	2.0	33%	5.0	
US 20/HARRISON	1331+37	-81.2	2.0	33%	5.0	
US 20/HARRISON	1331+75	-85.7	2.0	33%	5.0	
US 20/HARRISON	1332+12	-89.6	2.0	33%	5.0	
US 20/HARRISON	1332+51	-90.1	2.0	33%	5.0	
US 20/HARRISON	1332+88	-92.8	2.0	33%	5.0	
US 20/HARRISON	1333+27	-91.4	2.0	33%	5.0	
US 20/HARRISON	1333+65	-92.0	2.0	33%	5.0	
US 20/HARRISON	1334+03	-95.9	2.0	33%	5.0	
US 20/HARRISON	1334+41	-99.8	2.0	33%	5.0	
US 20/HARRISON	1334+78	-103.7	2.0	33%	5.0	
US 20/HARRISON	1335+16	-107.6	2.0	33%	5.0	
US 20/HARRISON	1335+72	-104.7	18.0	33%	21.0	
US 20/HARRISON	1336+10	-101.0	18.0	33%	21.0	
US 20/HARRISON	1336+48	-97.3	18.0	33%	21.0	
US 20/HARRISON	1336+86	-93.6	18.0	33%	21.0	
US 20/HARRISON	1337+23	-90.0	18.0	33%	21.0	
US 20/HARRISON	1337+61	-86.2	18.0	33%	21.0	
Stage 1						
US 20/HARRISON	1332+71	77.4	2.0	33%	5.0	
US 20/HARRISON	1333+45	79.7	2.0	33%	5.0	
US 20/HARRISON	1334+21	82.0	2.0	33%	5.0	
US 20/HARRISON	1334+96	84.4	2.0	33%	5.0	
Stage 1B						
US 20/HARRISON	1325+21	73.2	2.0	33%	5.0	
US 20/HARRISON	1325+96	71.9	2.0	33%	5.0	
US 20/HARRISON	1326+71	70.5	2.0	33%	5.0	
US 20/HARRISON	1327+45	69.3	2.0	33%	5.0	
US 20/HARRISON	1328+21	68.0	2.0	33%	5.0	
US 20/HARRISON	1328+96	66.6	2.0	33%	5.0	
US 20/HARRISON	1329+70	65.3	2.0	33%	5.0	
US 20/HARRISON	1330+45	63.9	2.0	33%	5.0	
US 20/HARRISON	1331+20	62.6	2.0	33%	5.0	
US 20/HARRISON	1331+96	68.9	2.0	33%	5.0	
Stage 2						
HARRISON	135+97	-68.1	2.0	33%	5.0	
HARRISON	136+48	-74.0	2.0	33%	5.0	
HARRISON	137+06	-72.6	2.0	33%	5.0	
HARRISON	137+55	-73.8	2.0	33%	5.0	
HARRISON	138+05	-77.0	2.0	33%	5.0	
US 20/HARRISON	1327+19	-91.2	2.0	33%	5.0	
US 20/HARRISON	1327+57	-88.1	2.0	33%	5.0	

28000305
TEMPORARY DITCH CHECKS
80% FED / 20% STATE

ROAD	STA	OFFSET	DITCH WIDTH	SIDE SLOPE	FOOT	REMARKS
US 20/HARRISON	1327+95	-85.1	2.0	33%	5.0	
US 20/HARRISON	1328+33	-82.1	2.0	33%	5.0	
US 20/HARRISON	1328+71	-79.0	2.0	33%	5.0	
US 20/HARRISON	1329+09	-76.8	2.0	33%	5.0	
US 20/HARRISON	1329+47	-77.3	2.0	33%	5.0	
US 20/HARRISON	1328+85	-77.8	2.0	33%	5.0	
US 20/HARRISON	1330+23	-78.3	2.0	33%	5.0	
US 20/HARRISON	1330+61	-78.8	2.0	33%	5.0	
US 20/HARRISON	1330+99	-80.0	2.0	33%	5.0	
US 20/HARRISON	1331+37	-81.2	2.0	33%	5.0	
US 20/HARRISON	1331+75	-85.7	2.0	33%	5.0	
US 20/HARRISON	1332+12	-89.6	2.0	33%	5.0	
US 20/HARRISON	1332+51	-90.1	2.0	33%	5.0	
US 20/HARRISON	1332+88	-92.8	2.0	33%	5.0	
US 20/HARRISON	1333+27	-91.4	2.0	33%	5.0	
US 20/HARRISON	1333+65	-92.0	2.0	33%	5.0	
US 20/HARRISON	1334+03	-95.9	2.0	33%	5.0	
US 20/HARRISON	1334+41	-99.8	2.0	33%	5.0	
US 20/HARRISON	1334+78	-103.7	2.0	33%	5.0	
US 20/HARRISON	1335+16	-107.6	2.0	33%	5.0	
US 20/HARRISON	1335+72	-104.5	18.0	33%	21.0	
US 20/HARRISON	1336+10	-101.0	18.0	33%	21.0	
US 20/HARRISON	1336+48	-97.3	18.0	33%	21.0	
US 20/HARRISON	1336+86	-93.6	18.0	33%	21.0	
US 20/HARRISON	1337+23	-89.9	18.0	33%	21.0	
US 20/HARRISON	1337+61	-86.2	18.0	33%	21.0	
Stage 2B						
HARRISON	137+69	-89.8	4.0	33%	7.0	
HARRISON	139+18	-96.8	4.0	33%	7.0	
HARRISON	140+52	-134.9	4.0	33%	7.0	
HARRISON	142+31	-109.4	4.0	33%	7.0	
HARRISON	1332+60	-99.3	4.0	33%	7.0	
HARRISON	1332+98	-102.7	4.0	33%	7.0	
HARRISON	1333+35	-105.3	4.0	33%	7.0	
HARRISON	1333+74	-108.6	4.0	33%	7.0	
HARRISON	1334+12	-111.5	4.0	33%	7.0	
HARRISON	1334+49	-114.8	4.0	33%	7.0	
HARRISON	1334+87	-118.4	4.0	33%	7.0	
HARRISON	1335+65	-115.6	4.0	33%	7.0	
HARRISON	1336+15	-107.7	4.0	33%	7.0	
HARRISON	1336+64	-99.8	4.0	33%	7.0	
Stage 3						
HARRISON	131+44	83.7	10.0	33%	13.0	
HARRISON	133+02	80.3	10.0	33%	13.0	
HARRISON	134+53	86.1	10.0	33%	13.0	
HARRISON	136+03	91.5	10.0	33%	13.0	
HARRISON	137+53	96.9	10.0	33%	13.0	
HARRISON	139+03	100.5	10.0	33%	13.0	
HARRISON	140+53	107.6	10.0	33%	13.0	
HARRISON	142+03	104.6	10.0	33%	13.0	
HARRISON	143+53	101.7	10.0	33%	13.0	
US 20/HARRISON	1324+63	-86.7	4.0	33%	7.0	
US 20/HARRISON	1326+13	-83.5	4.0	33%	7.0	
US 20/HARRISON	1326+51	-84.3	4.0	33%	7.0	
US 20/HARRISON	1326+89	-85.6	4.0	33%	7.0	
US 20/HARRISON	1327+27	-90.1	4.0	33%	7.0	
US 20/HARRISON	1327+65	-90.3	4.0	33%	7.0	
US 20/HARRISON	1328+03	-90.9	4.0	33%	7.0	
US 20/HARRISON	1328+41	-91.7	4.0	33%	7.0	
US 20/HARRISON	1328+79	-91.8	4.0	33%	7.0	
US 20/HARRISON	1329+17	-91.9	4.0	33%	7.0	
US 20/HARRISON	1329+55	-92.1	4.0	33%	7.0	
US 20/HARRISON	1329+93	-92.2	4.0	33%	7.0	
US 20/HARRISON	1330+31	-92.6	4.0	33%	7.0	
US 20/HARRISON	1330+69	-93.0	4.0	33%	7.0	
US 20/HARRISON	1331+07	-94.5	4.0	33%	7.0	
US 20/HARRISON	1331+45	-95.4	4.0	33%	7.0	
US 20/HARRISON	1331+83	-96.9	4.0	33%	7.0	

28000305
TEMPORARY DITCH CHECKS
80% FED / 20% STATE

ROAD	STA	OFFSET	DITCH WIDTH	SIDE SLOPE	FOOT	REMARKS
US 20/HARRISON	1332+21	-97.4	4.0	33%	7.0	
US 20/HARRISON	1323+08	80.8	4.0	33%	7.0	
US 20/HARRISON	1324+58	76.8	4.0	33%	7.0	
US 20/HARRISON	1325+33	75.4	4.0	33%	7.0	
US 20/HARRISON	1326+08	74.7	4.0	33%	7.0	
US 20/HARRISON	1326+83	73.7	4.0	33%	7.0	
US 20/HARRISON	1327+58	71.3	4.0	33%	7.0	
US 20/HARRISON	1328+33	70.7	4.0	33%	7.0	
US 20/HARRISON	1329+08	70.2	4.0	33%	7.0	
US 20/HARRISON	1329+83	69.6	4.0	33%	7.0	
US 20/HARRISON	1330+58	69.0	4.0	33%	7.0	
US 20/HARRISON	1331+33	68.5	4.0	33%	7.0	
US 20/HARRISON	1332+08	66.8	4.0	33%	7.0	
US 20/HARRISON	1332+59	66.6	4.0	33%	7.0	
US 20/HARRISON	1333+08	70.9	4.0	33%	7.0	
US 20/HARRISON	1334+08	77.5	4.0	33%	7.0	
US 20/HARRISON	1334+58	80.2	4.0	33%	7.0	
US 20/HARRISON	1335+08	81.0	4.0	33%	7.0	
I-39 NB	18+94	65.6	4.0	33%	7.0	
I-39 NB	20+44	68.7	4.0	33%	7.0	
I-39 NB	21+95	64.6	4.0	33%	7.0	
RAMP A	103+58	-82.5	4.0	33%	7.0	
RAMP A	103+91	-69.4	4.0	33%	7.0	
RAMP A	104+25	-57.5	4.0	33%	7.0	
RAMP A	104+60	-48.2	4.0	33%	7.0	
RAMP A	104+95	-43.9	4.0	33%	7.0	
RAMP A	105+32	-41.2	2.8	33%	5.8	
RAMP A	105+68	-36.7	2.0	33%	5.0	
RAMP A	105+82	59.3	4.0	33%	7.0	
RAMP A	106+22	48.4	4.0	33%	7.0	
RAMP A	106+63	46.8	4.0	33%	7.0	
RAMP A	107+02	44.6	4.0	33%	7.0	
RAMP A	108+60	43.2	4.0	33%	7.0	
RAMP A	110+12	37.1	4.0	33%	7.0	
RAMP A	111+63	38.4	4.0	33%	7.0	
RAMP A	113+14	41.8	4.0	33%	7.0	
RAMP A	114+65	33.6	4.0	33%	7.0	
RAMP D	405+11	-83.6	75.0	33%	78.0	
RAMP D	406+51	-66.0	36.0	33%	39.0	
RAMP D	407+93	-55.3	4.0	33%	7.0	
RAMP D	409+37	-40.6	4.0	33%	7.0	
RAMP D	408+14	154.1	2.0	33%	5.0	
RAMP D	409+66	74.1	12.0	33%	15.0	
RAMP D	411+28	65.2	4.0	33%	7.0	
RAMP D	412+78	65.4	4.0	33%	7.0	
Stage 4						
RAMP B	215+51	33.7	4.0	33%	7.0	
RAMP B	217+08	38.8	4.0	33%	7.0	
RAMP B	218+72	44.8	4.0	33%	7.0	
RAMP B	519+19	53.4	4.0	33%	7.0	
RAMP B	220+49	129.2	4.0	33%	7.0	
RAMP B	221+84	190.5	4.0	33%	7.0	
RAMP B	221+61	31.3	4.0	33%	7.0	
RAMP B	222+97	40.1	4.0	33%	7.0	
RAMP B	224+22	49.2	10.0	33%	13.0	
RAMP B	225+67	50.2	10.0	33%	13.0	
RAMP C	309+43	40.7	4.0	33%	7.0	
RAMP C	311+04	51.6	4.0	33%	7.0	
RAMP C	312+70	68.0	4.0	33%	7.0	

28000305
TEMPORARY DITCH CHECKS
80% FED / 20% STATE

ROAD	STA	OFFSET	DITCH WIDTH	SIDE SLOPE	FOOT	REMARKS
Stage 4B						
HARRISON	143+81	-115.8	4.0	33%	7.0	
HARRISON	145+30	-163.4	4.0	33%	7.0	
HARRISON	146+81	-209.7	4.0	33%	7.0	
US 20/HARRISON	1319+81	80.5	4.0	33%	7.0	
US 20/HARRISON	1321+30	80.9	4.0	33%	7.0	
US 20/HARRISON	1322+80	81.4	4.0	33%	7.0	
RAMP C	301+48	39.8	4.0	33%	7.0	
RAMP C	302+98	39.9	4.0	33%	7.0	
RAMP C	304+49	47.6	4.0	33%	7.0	
RAMP C	306+00	47.3	4.0	33%	7.0	
RAMP C	307+49	41.9	4.0	33%	7.0	
I-39 SB	1315+27	-82.4	4.0	33%	7.0	
I-39 SB	1316+77	-84.5	4.0	33%	7.0	
I-39 SB	1318+27	-84.2	4.0	33%	7.0	
I-39 SB	1319+77	-88.3	4.0	33%	7.0	
				SUBTOTAL	1,633	
				GRAND TOTAL	1,633	

MODEL: Default
FILE NAME: pw://benesch-pw.bentley.com:benesch-pw-01/Documents/10800s\10800.00\Eng_Docs\CAD_Sheets\General\D764R71-2DI-sht-SCH-06.dgn

benesch
Alfred Benesch & Company
35 W. Wacker Drive, Suite 3300
Chicago, Illinois 60601
312.565.0450 Job No. 10800.00

USER NAME = mtoney	DESIGNED - A.GIBSON	REVISED -	
	DRAWN - J.MAJCHER	REVISED -	
PLOT SCALE = 0.167 ' / in.	CHECKED - J.TARDY	REVISED -	
PLOT DATE = 10/13/2023	DATE - 10/13/2023	REVISED -	

STATE OF ILLINOIS
DEPARTMENT OF TRANSPORTATION

SCHEDULE OF QUANTITIES
EROSION AND SEDIMENT CONTROL

SCALE: N/A | SHEET 7 OF 48 SHEETS | STA. | TO STA.

F.A.* RTE.	SECTION	COUNTY	TOTAL SHEETS	SHEET NO.
*	(5)RS & (5&5HB)RC	WINNEBAGO	1279	55
		CONTRACT NO. 64R71		
	ILLINOIS FED. AID PROJECT			

* FAI ROUTE 39 (I-39) & FAP ROUTE 525 (US 20)

28000400
PERIMETER EROSION BARRIER
80% FED / 20% STATE

ROAD	START STA	OFFSET	END STA	OFFSET	FOOT	REMARKS
Prestage						
HARRISON	119+31	-47.8	125+56	-58.5	642.4	
HARRISON	127+06	-58.5	128+62	-59.1	161.3	
HARRISON	130+06	-83.8	144+73	-109.7	1500.2	
HARRISON	144+37	-60.0	146+63	-279.2	595.5	
HARRISON	148+39	-160.5	152+70	-68.5	447.9	
US 20/HARRISON	1312+20	-66.4	1313+81	-69.0	159.7	
US 20/HARRISON	1315+26	-59.3	1316+67	-141.9	208.6	
US 20/HARRISON	1317+54	-343.9	1320+26	-220.4	1053.2	
US 20/HARRISON	1330+85	-61.7	1338+27	-63.5	741.6	
US 20/HARRISON	1339+78	-58.5	1342+16	-53.4	238.3	
Stage 1						
MALL DRIVE	297+83	-163.6	297+50	-20.5	308.1	
MALL DRIVE	298+17	-146.7	299+34	-97.9	255.3	
MALL DRIVE	298+40	56.0	298+57	117.0	208.6	
MALL DRIVE	300+54	-89.1	302+96	-58.5	259.2	
MALL DRIVE	300+59	95.6	302+97	59.0	256.3	
HARRISON	122+66	57.4	125+22	60.3	247.8	
HARRISON	127+02	72.2	135+92	63.0	871.1	
HARRISON	145+87	106.4	146+75	273.4	230.2	
HARRISON	146+14	103.7	147+13	95.2	101.3	
HARRISON	147+41	93.1	148+02	146.9	93.4	
HARRISON	148+16	189.3	150+08	109.0	300.3	
HARRISON	150+35	108.8	152+23	72.4	204.2	
US 20/HARRISON	1311+70	72.5	1313+15	84.8	148.5	
US 20/HARRISON	1313+24	86.5	1314+56	116.2	137.6	
RAMP B	222+41	145.8	226+21	-89.8	643.5	
US 20/HARRISON	1316+73	114.4	1318+21	258.0	435.3	
US 20/HARRISON	1332+28	72.5	1338+40	108.1	631.2	
US 20/HARRISON	1339+02	102.8	1340+66	54.0	192.2	
Stage 1B						
HARRISON	135+92	63.0	140+68	72.3	476.4	
US 20/HARRISON	1321+68	76.7	1332+27	62.7	1060.7	
Stage 2						
HARRISON	127+47	-125.0	138+99	-56.1	1197.2	
HARRISON	146+62	-119.9	147+93	-96.0	342.3	
HARRISON	151+37	-64.5	152+68	-62.0	130.6	
US 20/HARRISON	1312+18	-62.1	1315+03	-92.0	294.7	
US 20/HARRISON	1317+08	-74.7	1317+56	-85.0	71.2	
US 20/HARRISON	1318+23	-96.7	1322+77	-82.2	453.9	
US 20/HARRISON	1327+00	-69.7	1337+98	-52.6	1099.0	
Stage 2B						
HARRISON	135+25	-55.0	140+68	-67.1	543.7	
HARRISON	140+32	-162.1	145+08	-154.4	552.5	
HARRISON	148+48	-153.9	151+37	-64.4	304.3	
US 20/HARRISON	1318+21	-123.9	1323+02	-72.9	478.5	
US 20/HARRISON	1332+43	-72.6	1337+71	-103.9	551.0	
I-39 NB	8+51	-21.4	14+81	-21.6	629.4	
I-39 NB	15+23	-29.4	24+53	-22.2	1161.8	
I-39 SB	1302+89	-49.0	1308+45	-54.0	552.2	
I-39 SB	2741+23	-68.4	2747+00	-55.5	575.4	
RAMP C	300+00	28.0	304+04	26.3	402.9	
RAMP C	304+04	26.3	307+14	35.5	310.1	
Stage 3						
HARRISON/US20	1316+82	-141.3	1318+25	-123.5	143.1	
HARRISON/US20	1323+64	52.6	1338+00	64.6	1436.3	
HARRISON/US20	1323+93	-72.6	1332+43	-72.9	849.4	
I-39 NB	17+52	53.0	21+99	53.0	443.5	
RAMP A	100+71	43.3	114+77	17.0	1411.6	
RAMP A	101+40	-90.7	106+99	-25.0	583.7	
RAMP D	401+83	-37.0	410+41	-21.0	874.7	
RAMP D	401+83	13.0	416+33	11.0	1446.3	
Stage 3B						
I-39 NB	13+42	-17.0	22+00	-17.0	860.4	
I-39 SB	1309+38	28.0	1311+19	28.0	183.2	
I-39 SB	1311+19	28.0	1319+95	28.0	875.0	
I-39 SB	2745+97	31.8	2754+46	25.9	848.2	

28000400
PERIMETER EROSION BARRIER
80% FED / 20% STATE

ROAD	START STA	OFFSET	END STA	OFFSET	FOOT	REMARKS
Stage 4						
I-39 SB	1306+34	-53.0	1307+38	-53.0	103.2	
RAMP B	214+29	19.7	226+52	35.4	1236.4	
RAMP B	216+75	-34.8	226+37	-67.1	959.5	
RAMP C	307+69	11.0	317+77	11.0	1005.5	
RAMP C	307+83	-25.0	317+36	-33.0	955.8	
Stage 4B						
I-39 SB	1315+23	-55.0	1319+95	-55.0	472.1	
RAMP C	300+00	18.0	304+04	13.0	403.8	
RAMP C	304+04	13.0	304+86	13.0	82.3	
				SUBTOTAL	37,636	
				GRAND TOTAL	37,636	

28001100
TEMPORARY EROSION CONTROL BLANKET
80% FED / 20% STATE

ROAD	STA	STA	LT/RT	SQ YD	REMARKS
Prestage					
HARRISON	119+27	125+56	LT	2,044.1	
HARRISON	127+06	128+62	LT	192.4	
HARRISON	130+04	144+76	LT	4,086.3	
HARRISON	140+72	141+07	RT	139.2	
HARRISON	144+38	148+01	LT	1,116.9	
HARRISON	147+03	147+87	LT	971.9	
HARRISON	148+16	148+64	LT	83.0	
HARRISON	148+36	152+70	LT	1,049.2	
US 20/HARRISON	1312+18	1313+81	LT	209.9	
US 20/HARRISON	1315+06	1316+92	LT	387.9	
US 20/HARRISON	1315+21	1317+35	RT	1,495.6	
US 20/HARRISON	1316+19	1316+97	RT	1,038.9	
US 20/HARRISON	1317+07	1324+28	LT	3,897.0	
US 20/HARRISON	1327+57	1327+93	LT	138.2	
US 20/HARRISON	1330+85	1338+33	LT	2,549.4	
US 20/HARRISON	1339+78	1342+18	LT	1,023.8	
Stage 1					
MALL DRIVE	297+35	297+85	LT/RT	110.8	
MALL DRIVE	300+48	303+00	LT	157.7	
MALL DRIVE	300+56	303+00	RT	249.0	
HARRISON	122+66	125+87	RT	2,755.0	
HARRISON	126+52	130+29	RT	2,313.4	
HARRISON	126+99	135+92	RT	2,695.6	
HARRISON	143+38	145+70	RT	395.4	
HARRISON	144+55	148+18	RT	1,779.8	
HARRISON	148+15	152+26	RT	1,094.8	
US 20/HARRISON	1311+70	1316+34	RT	1,099.5	
US 20/HARRISON	1316+70	1320+50	RT	2,111.2	
US 20/HARRISON	1332+28	1338+44	RT	1,398.5	
US 20/HARRISON	1338+94	1340+66	RT	114.1	
Stage 1B					
HARRISON	135+92	140+70	RT	1,947.5	
US 20/HARRISON	1316+52	1318+01	RT	381.7	
US 20/HARRISON	1321+67	1332+27	RT	1,226.5	
Stage 2					
HARRISON	127+13	138+99	LT	2,418.2	
HARRISON	141+91	142+11	LT	65.3	
HARRISON	144+21	145+47	LT	135.6	
HARRISON	145+45	147+98	LT	854.1	
HARRISON	151+36	152+72	LT	463.5	
US 20/HARRISON	1312+17	1315+31	LT	4,251.0	
US 20/HARRISON	1317+08	1317+76	LT	126.4	
US 20/HARRISON	1318+03	1324+29	LT	1,736.5	
US 20/HARRISON	1327+00	1338+00	LT	2,819.3	

28001100
TEMPORARY EROSION CONTROL BLANKET
80% FED / 20% STATE

ROAD	STA	STA	LT/RT	SQ YD	REMARKS
Stage 2B					
HARRISON	130+60	134+60	LT	304.9	
HARRISON	130+60	134+62	LT	116.1	
HARRISON	134+81	140+13	LT	875.7	
HARRISON	134+93	145+27	LT	6,346.3	
HARRISON	148+42	153+08	LT	12,524.8	
US 20/HARRISON	1314+89	1316+04	LT	274.7	
US 20/HARRISON	1316+09	1316+91	LT	417.5	
US 20/HARRISON	1318+25	1323+80	LT	1,159.5	
US 20/HARRISON	1318+25	1324+51	LT	1,146.2	
US 20/HARRISON	1332+43	1338+00	LT	4,688.0	
I-39 NB	4+55	6+27	LT	176.9	
I-39 NB	8+51	14+83	LT	459.1	
I-39 NB	15+23	24+53	LT	1,292.6	
I-39 SB	1302+89	1308+50	LT	616.1	
I-39 SB	1308+09	1311+19	LT	345.1	
Stage 3					
HARRISON	123+50	125+88	RT	2,795.3	
HARRISON	126+52	130+28	RT	2,312.8	
HARRISON	127+00	148+32	RT	21,558.2	
HARRISON	145+07	146+07	LT	212.6	
HARRISON	148+65	152+31	RT	5,610.8	
US 20/HARRISON	1312+18	1315+18	LT	2,259.3	
US 20/HARRISON	1313+31	1314+94	LT	325.3	
US 20/HARRISON	1315+44	1332+43	LT	16,780.9	
US 20/HARRISON	1316+57	1318+25	LT	820.0	
US 20/HARRISON	1318+39	1321+45	RT	636.0	
US 20/HARRISON	1321+70	1338+00	RT	8,265.0	
US 20/HARRISON	1323+93	1332+43	LT	943.8	
I-39 NB	17+53	21+99	RT	2,001.2	
I-39 SB	1311+19	1319+95	LT	1,085.0	
RAMP A	102+40	114+77	RT	19,913.1	
RAMP A	102+40	107+23	LT	6,064.8	
RAMP D	402+19	416+33	RT	22,727.9	
RAMP D	402+33	411+44	LT	14,200.2	
Stage 3B					
I-39 NB	6+41	22+00	LT	3,792.3	
I-39 SB	1311+18	1319+95	RT	3,847.9	
Stage 4					
HARRISON	144+86	145+74	LT	256.8	
HARRISON	144+62	147+79	LT	2,569.5	
US 20/HARRISON	1311+79	1315+18	RT	1,984.5	
US 20/HARRISON	1315+59	1316+60	RT	454.9	
RAMP B	214+11	226+37	RT	20,109.7	
RAMP B	216+00	225+74	LT	19,080.9	
RAMP C	306+69	317+65	LT	17,175.3	
RAMP C	307+54	317+96	RT	18,974.9	
Stage 4B					
HARRISON	142+99	147+93	LT	1,139.2	
HARRISON	142+99	148+49	LT	6,316.2	
US 20/HARRISON	1316+09	1324+64	RT	6,811.2	
I-39 SB	1315+22	1319+95	LT	2,310.3	
RAMP B	209+60	226+37	RT	12,124.7	
RAMP C	300+00	304+04	RT	2,090.8	
RAMP C	304+04	317+39	RT	8,036.9	
			SUBTOTAL	339,457	
			GRAND TOTAL	339,457	

MODEL: Default
FILE NAME: pw://benesch-pw.bentley.com:benesch-pw-01/Documents/10800s/10800.00/Eng. Docs/CAD Sheets/General/D26R771-DDI-sht-SCH-07.dgn

benesch
Alfred Benesch & Company
35 W. Wacker Drive, Suite 3300
Chicago, Illinois 60601
312-565-0150 Job No. 10800.00

USER NAME = mtoney	DESIGNED - A.GIBSON	REVISED -	
	DRAWN - J.MAJCHER	REVISED -	
PLOT SCALE = 0.167 ' / in.	CHECKED - J.TARDY	REVISED -	
PLOT DATE = 10/13/2023	DATE - 10/13/2023	REVISED -	

STATE OF ILLINOIS
DEPARTMENT OF TRANSPORTATION

SCHEDULE OF QUANTITIES
EROSION AND SEDIMENT CONTROL

SCALE: N/A | SHEET 8 OF 48 SHEETS | STA. | TO STA.

F.A.* RTE.	SECTION	COUNTY	TOTAL SHEETS	SHEET NO.
*	(5)RS & (5&5HB)RC	WINNEBAGO	1279	56
		CONTRACT NO. 64R71		
	ILLINOIS	FED. AID PROJECT		

* FAI ROUTE 39 (I-39) & FAP ROUTE 525 (US 20)

28000510
INLET FILTERS
80% FED / 20% STATE

ROAD	STA	OFFSET	EACH	REMARKS
Prestage				
HARRISON	123+00	-7.9	1	
HARRISON	123+98	-8.2	1	
HARRISON	131+59	1.9	1	
HARRISON	133+17	-1.9	1	
HARRISON	133+17	2.5	1	
HARRISON	135+20	-2.3	1	
HARRISON	135+20	2.3	1	
HARRISON	136+73	-2.0	1	
HARRISON	136+73	2.3	1	
HARRISON	137+48	-2.2	1	
HARRISON	137+48	2.4	1	
HARRISON	140+19	-6.2	1	
HARRISON	140+17	2.4	1	
HARRISON	142+02	-2.4	1	
HARRISON	142+01	2.4	1	
HARRISON	144+83	-2.5	1	
HARRISON	144+83	2.2	1	
HARRISON	146+19	-2.2	1	
HARRISON	146+19	-2.3	1	
HARRISON	148+21	-2.3	1	
HARRISON	148+21	2.2	1	
HARRISON	150+72	-2.5	1	
HARRISON	150+72	2.1	1	
HARRISON	152+19	-2.6	1	
HARRISON	152+19	2.0	1	
US 20/HARRISON	1312+11	-2.7	1	
US 20/HARRISON	1312+11	1.8	1	
US 20/HARRISON	1313+65	-2.7	1	
US 20/HARRISON	1313+65	2.0	1	
US 20/HARRISON	1315+32	-2.4	1	
US 20/HARRISON	1315+36	4.3	1	
US 20/HARRISON	1316+95	-2.4	1	
US 20/HARRISON	1316+95	2.0	1	
US 20/HARRISON	1319+67	-2.4	1	
US 20/HARRISON	1319+67	2.2	1	
US 20/HARRISON	1320+80	-2.3	1	
US 20/HARRISON	1320+80	2.3	1	
US 20/HARRISON	1322+77	-6.6	1	
US 20/HARRISON	1322+78	5.7	1	
US 20/HARRISON	1326+25	-6.5	1	
US 20/HARRISON	1326+28	3.6	1	
US 20/HARRISON	1329+24	-2.7	1	
US 20/HARRISON	1329+24	1.9	1	
US 20/HARRISON	1331+95	-2.4	1	
US 20/HARRISON	1331+95	2.4	1	
US 20/HARRISON	1333+69	2.2	1	
Stage 1				
HARRISON	128+50	3.6	1	
HARRISON	128+50	8.5	1	
HARRISON	128+50	45.8	1	
HARRISON	129+25	4.2	1	
HARRISON	129+25	8.4	1	
HARRISON	129+25	45.0	1	
HARRISON	130+00	4.1	1	
HARRISON	130+00	8.5	1	
HARRISON	130+00	45.0	1	
HARRISON	131+00	4.2	1	
HARRISON	131+00	7.9	1	
HARRISON	131+00	45.0	1	
HARRISON	132+00	9.0	1	
HARRISON	132+00	45.0	1	
HARRISON	133+00	45.0	1	
HARRISON	134+00	45.0	1	
HARRISON	135+00	45.0	1	
HARRISON	139+00	9.0	1	
HARRISON	140+00	9.0	1	
HARRISON	141+00	9.0	1	
HARRISON	142+00	9.0	1	

28000510
INLET FILTERS
80% FED / 20% STATE

ROAD	STA	OFFSET	EACH	REMARKS
HARRISON	143+00	9.0	1	
HARRISON	144+00	9.0	1	
HARRISON	144+00	45.0	1	
HARRISON	145+00	11.3	1	
HARRISON	145+00	49.0	1	
HARRISON	146+00	24.3	1	
HARRISON	146+00	62.5	1	
HARRISON	146+60	24.3	1	
HARRISON	147+26	55.7	1	
HARRISON	147+50	59.5	1	
HARRISON	147+64	35.4	1	
HARRISON	147+96	87.7	1	
HARRISON	148+04	21.4	1	
HARRISON	148+18	126.4	1	
HARRISON	148+50	119.0	1	
HARRISON	148+83	64.7	1	
HARRISON	149+12	53.0	1	
HARRISON	149+15	82.3	1	
HARRISON	149+22	13.5	1	
HARRISON	150+25	22.9	1	
HARRISON	150+25	72.9	1	
HARRISON	150+49	73.0	1	
HARRISON	151+60	6.7	1	
HARRISON	151+65	54.7	1	
HARRISON	152+15	7.0	1	
HARRISON	152+15	46.6	1	
HARRISON	152+90	6.3	1	
HARRISON	152+90	46.6	1	
US 20/HARRISON	1311+85	45.0	1	
US 20/HARRISON	1312+50	45.0	1	
US 20/HARRISON	1313+25	52.1	1	
US 20/HARRISON	1314+00	66.5	1	
US 20/HARRISON	1314+84	89.0	1	
US 20/HARRISON	1316+41	23.7	1	
US 20/HARRISON	1317+07	13.0	1	
US 20/HARRISON	1317+10	40.8	1	
US 20/HARRISON	1318+00	24.6	1	
US 20/HARRISON	1318+47	24.0	1	
US 20/HARRISON	1318+47	66.6	1	
US 20/HARRISON	1318+75	19.5	1	
US 20/HARRISON	1318+76	65.4	1	
US 20/HARRISON	1322+80	9.0	1	
US 20/HARRISON	1333+00	5.4	1	
US 20/HARRISON	1333+00	49.0	1	
US 20/HARRISON	1335+00	57.0	1	
US 20/HARRISON	1336+50	57.0	1	
Stage 1B				
HARRISON	133+00	8.2	1	
HARRISON	134+00	9.0	1	
HARRISON	135+00	9.0	1	
HARRISON	136+00	9.0	1	
HARRISON	136+00	45.0	1	
HARRISON	137+00	9.0	1	
HARRISON	137+00	45.0	1	
HARRISON	138+00	9.0	1	
HARRISON	138+00	45.0	1	
HARRISON	139+00	45.0	1	
HARRISON	140+00	45.0	1	
HARRISON	141+00	45.0	1	
HARRISON	142+00	45.0	1	
HARRISON	143+00	45.0	1	
US 20/HARRISON	1313+25	12.9	1	
US 20/HARRISON	1314+00	22.4	1	
US 20/HARRISON	1314+82	19.6	1	
US 20/HARRISON	1315+31	57.7	1	
US 20/HARRISON	1322+80	45.0	1	
US 20/HARRISON	1325+00	7.5	1	
US 20/HARRISON	1325+00	47.6	1	
US 20/HARRISON	1327+20	9.0	1	

28000510
INLET FILTERS
80% FED / 20% STATE

ROAD	STA	OFFSET	EACH	REMARKS
US 20/HARRISON	1328+05	-45.9	1	
US 20/HARRISON	1329+00	-45.0	1	
US 20/HARRISON	1331+00	-46.5	1	
US 20/HARRISON	1331+00	-9.0	1	
US 20/HARRISON	1333+00	-45.0	1	
US 20/HARRISON	1333+00	-9.0	1	
US 20/HARRISON	1333+00	3.7	1	
US 20/HARRISON	1335+00	-45.0	1	
US 20/HARRISON	1335+00	-7.6	1	
US 20/HARRISON	1335+00	-3.3	1	
US 20/HARRISON	1336+50	-45.0	1	
US 20/HARRISON	1336+50	-6.8	1	
US 20/HARRISON	1336+50	-2.4	1	
Stage 2B				
HARRISON	135+00	-9.0	1	
HARRISON	136+00	-9.1	1	
HARRISON	137+00	-9.1	1	
HARRISON	138+00	-9.0	1	
HARRISON	139+00	-48.7	1	
HARRISON	139+00	-9.0	1	
HARRISON	140+00	-50.8	1	
HARRISON	140+00	-9.0	1	
HARRISON	141+00	-53.7	1	
HARRISON	142+00	-55.3	1	
HARRISON	143+00	-57.5	1	
HARRISON	144+00	-59.0	1	
HARRISON	144+23	-59.7	1	
HARRISON	148+76	-92.7	1	
HARRISON	149+11	-100.0	1	
HARRISON	149+35	-66.6	1	
HARRISON	150+25	-49.0	1	
HARRISON	150+25	-22.7	1	
US 20/HARRISON	1316+85	-58.7	1	
US 20/HARRISON	1316+85	-36.1	1	
US 20/HARRISON	1325+00	-45.0	1	
US 20/HARRISON	1327+20	-9.0	1	
US 20/HARRISON	1328+05	-9.0	1	
US 20/HARRISON	1329+00	-9.0	1	
Stage 4				
HARRISON	150+25	20.9	1	
US 20/HARRISON	1315+86	142.6	1	
US 20/HARRISON	1316+60	96.2	1	
		SUBTOTAL	231	
		GRAND TOTAL	231	

MODEL: Default
FILE NAME: pw://benesch-pw.bentley.com:benesch-pw-01/Documents/10800s/10800L00/Eng_Docs/CAD_Sheets/General/D764R71-001-sht-SCH-08.dgn

benesch
Allied Benesch & Company
35 W. Wacker Drive, Suite 3300
Chicago, Illinois 60601
312-565-0450 Job No. 10800.00

USER NAME = mtoney	DESIGNED - A.GIBSON	REVISED -	
	DRAWN - J.MAJCHER	REVISED -	
PLOT SCALE = 0.167 ' / In.	CHECKED - J.TARDY	REVISED -	
PLOT DATE = 10/13/2023	DATE - 10/13/2023	REVISED -	

STATE OF ILLINOIS
DEPARTMENT OF TRANSPORTATION

SCHEDULE OF QUANTITIES
EROSION AND SEDIMENT CONTROL

SCALE: N/A | SHEET 9 OF 48 SHEETS | STA. | TO STA.

F.A.* RTE.	SECTION	COUNTY	TOTAL SHEETS	SHEET NO.
*	(5)RS & (5&5HB)RC	WINNEBAGO	1279	57
		CONTRACT NO. 64R71		
	ILLINOIS FED. AID PROJECT			

* FAI ROUTE 39 (I-39) & FAP ROUTE 525 (US 20)

PAY LIMIT		25000210	25000310	25000312	25000320	25100127
		SEEDING CLASS 2A	SEEDING CLASS 4	SEEDING CLASS 4A	SEEDING CLASS 5	MULCH METHOD 3A
		(ACRE)	(ACRE)	(ACRE)	(ACRE)	(ACRE)
Start STA. Stop STA.						
HARRISON AVE						
Sheet 1: 123+00.00 TO 139+00.00						
123+00.00 126+24.88	LT	0.071	0.077	0	0	0.148
123+00.00 126+24.88	LT	0.029	0	0	0	0.029
123+00.00 126+24.88	RT	0.084	0	0.081	0.081	0.165
123+00.00 126+24.88	RT	0.292	0	0.096	0.096	0.388
126+24.88 139+00.00	LT	0.35	0.198	0.28	0.28	0.828
126+24.88 139+00.00	LT	0.047	0.007	0	0	0.054
126+24.88 139+00.00	RT	0.615	0.274	0.688	0.688	1.577
126+24.88 139+00.00	RT	0.23	0	0.219	0.219	0.449
500+00.00 503+00.00	RT	0.026	0	0	0	0.026
HARRISON AVE/US 20						
Sheet 2: 1325+67.59 TO 1338+00.00						
1325+67.59 1338+00.00	LT	0.49	0.719	0.574	0.574	1.783
1325+67.59 1338+00.00	RT	0.603	0.458	0.26	0.26	1.321
RAMP A						
Sheet 3: 100+64.02 TO 109+33.99						
100+64.02 109+33.99	LT/RT	2.58	4.524	1.485	1.485	8.589
100+64.02 109+33.99	LT/RT	0.24	0.457	0.087	0.087	0.784
100+64.02 109+33.99	LT/RT	0.538	0.573	0.179	0.179	1.290
RAMP B						
Sheet 4: 220+40.66 TO 228+00.00						
220+40.66 228+00.00	LT/RT	2.485	4.846	0.637	0.637	7.968
220+40.66 228+00.00	LT/RT	0.712	0.508	0.265	0.265	1.485
220+40.66 228+00.00	LT/RT	0.041	0.089	0	0	0.130
RAMP C						
Sheet 5: 312+56.34 TO 319+00.00						
312+56.34 319+00.00	LT/RT	1.989	3.996	1.52	1.52	7.505
312+56.34 319+00.00	LT/RT	0.878	0.823	1.122	1.122	2.823
312+56.34 319+00.00	LT/RT	0.03	0.023	0	0	0.053
RAMP D						
Sheet 6: 401+2.51 to 408+46.37						
401+2.51 408+46.37	LT/RT	2.798	3.908	2.667	2.667	9.373
401+2.51 408+46.37	LT/RT	0.154	0	0	0	0.154
401+2.51 408+46.37	LT/RT	0.528	0.562	0.013	0.013	1.103
I-39						
Sheet 7: 2699+63.45 TO 2714+63.45						
2699+63.45 2714+63.45	LT	0.23	0.313	0.264	0.264	0.807
2699+63.45 2714+63.45	LT	0.23	0.461	0.108	0.108	0.799
2699+63.45 2714+63.45	RT	0.001	0.007	0.003	0.003	0.011
2699+63.45 2714+63.45	RT	0.163	0.204	0	0	0.367
Sheet 8: 2734+00.00 TO 2749+00.00						
2734+00.00 2749+00.00	LT	0.01	0	0.016	0.016	0.026
2734+00.00 2749+00.00	LT	0.496	0	0.764	0.764	1.260
2734+00.00 2749+00.00	RT	1.23	0.654	0.702	0.702	2.590
Sheet 9: 2749+00.00 TO 2754+00.00						
2749+00.00 2754+00.00	RT	0.171	0.164	0	0	0.335
TOTAL		18,345	23,845	12,03	12,03	54,220
ADJUSTED TOTAL		20	24	12	12	54

MODEL: Default
FILE NAME: pw://benesch-pw.bentley.com:benesch-pw-01/Documents/10800s/10800,00/Eng_Docs/CAD Sheets/General/D264R71-D01-sht-SCH-08A.dgn

benesch
Alfred Benesch & Company
35 W. Wacker Drive, Suite 3300
Chicago, Illinois 60601
312-565-0450 Job No. 10800,00

USER NAME = JMajcher	DESIGNED - A.GIBSON	REVISED -
	DRAWN - J.MAJCHER	REVISED -
PLOT SCALE = 0.167 ' / In.	CHECKED - J.TARDY	REVISED -
PLOT DATE = 12/5/2023	DATE - 10/13/2023	REVISED -

STATE OF ILLINOIS
DEPARTMENT OF TRANSPORTATION

SCHEDULE OF QUANTITIES
LANDSCAPING

SCALE: N/A | SHEET 10 OF 48 SHEETS | STA. | TO STA.

F.A.* RTE.	SECTION	COUNTY	TOTAL SHEETS	SHEET NO.
*	(5)RS & (5&5HB)RC	WINNEBAGO	1279	58
		CONTRACT NO. 64R71		
	ILLINOIS FED. AID PROJECT			

* FAI ROUTE 39 (I-39) & FAP ROUTE 525 (US 20)

30300112 AGGREGATE SUBGRADE IMPROVEMENT, 12" 80% FED / 20% STATE						
ROAD	STA	STA	WIDTH	DESCRIPTION	SQ YD	REMARKS
PR HARRISON	123+50.00	125+69.46	48	EB LANES	1,171	
PR HARRISON	123+50.00	124+47.56	8	EB SHLD	87	
PR HARRISON	124+47.56	124+82.34	6.08	EB OUT C&G	32	
PR HARRISON	123+50.00	125+69.46	6	MEDIAN	147	
PR HARRISON	123+50.00	125+69.46	24	WB LANES	586	
PR HARRISON	123+50.00	124+06.35	8	WB SHLD	51	
PR HARRISON	124+06.35	124+39.78	6.08	WB OUT C&G	31	
PR HARRISON	125+69.46	126+24.86	78	PAVEMENT	481	
PR HARRISON	126+24.86	127+08.44	78	PAVEMENT	725	
PR HARRISON	127+08.44	129+75.00	36	EB LANES	1,067	
PR HARRISON	127+08.44	129+75.00	6	MEDIAN	178	
PR HARRISON	127+08.44	127+46.70	36	WB LANES	154	
PR HARRISON	127+46.70	129+75.00	48	WB LANES	1,218	
PR HARRISON	127+46.70	129+75.00	6.08	WB OUT C&G	155	
PR HARRISON	128+28.00	129+75.00	6.08	EB OUT C&G	100	
PR HARRISON	130+75.00	134+75.00	36	EB LANES	1,600	
PR HARRISON	130+75.00	134+75.00	6.08	EB OUT C&G	271	
PR HARRISON	130+75.00	131+12.70	6	MEDIAN	26	
PR HARRISON	130+75.00	131+12.70	48	WB LANES	202	
PR HARRISON	130+75.00	134+75.00	6.08	WB OUT C&G	271	
PR HARRISON	131+12.70	133+32.70	6.08	MEDIAN	282	
PR HARRISON	131+12.70	133+32.70	VAR 36-48	WB LANES	1,040	
PR HARRISON	133+32.70	134+75.00	6.08	MEDIAN	193	
PR HARRISON	133+32.70	134+75.00	48	WB LANES	759	
PR HARRISON	135+75.00	140+75.00	36	EB LANES	2,000	
PR HARRISON	135+75.00	140+75.00	6.08	EB OUT C&G	338	
PR HARRISON	135+75.00	140+75.00	6.08	MEDIAN	676	
PR HARRISON	135+75.00	137+39.12	36	WB LANES	657	
PR HARRISON	135+75.00	140+75.00	6.08	WB OUT C&G	338	
PR HARRISON	137+39.12	140+75.00	VAR 36-43.5	WB LANES	1,483	
PR HARRISON	142+75.00	144+48.18	36	EB LANES	693	
PR HARRISON	142+75.00	144+75.00	6.08	EB OUT C&G	136	
PR HARRISON	142+75.00	144+19.23	6.08	MEDIAN	195	
PR HARRISON	142+75.00	143+69.12	VAR 47.9-50	WB LANES	512	
PR HARRISON	142+75.00	144+75.00	6.08	WB OUT C&G	136	
PR HARRISON	144+48.18	144+75.00	VAR 36-36.3	EB LANES	108	
PR HARRISON	144+19.23	144+75.00	6.08	MEDIAN	76	
PR HARRISON	143+69.12	144+75.00	VAR 50-50.3	WB LANES	589	
PR HARRISON	150+25.00	152+52.04	VAR 50-38	WB LANES	1,023	
PR HARRISON	150+25.00	153+08.66	6.08	WB OUT C&G	192	
PR HARRISON	150+25.00	151+86.16	6.08	MEDIAN	150	
PR HARRISON	150+25.00	153+08.66	26	EB LANES	552	
PR HARRISON	152+52.04	153+08.66	38	WB LANES	151	
PR US20/HARRISON	1311+13.21	1313+25.26	38	WB LANES	640	
PR US20/HARRISON	1311+13.21	1314+80.00	6.08	WB OUT C&G	248	
PR US20/HARRISON	1311+13.21	1312+00.00	26	EB LANES	116	
PR US20/HARRISON	1311+13.21	1314+80.00	6.08	EB OUT C&G	70	
PR US20/HARRISON	1312+00.00	1314+80.00	VAR 26-60.7	EB LANES	1,060	
PR US20/HARRISON	1312+57.64	1314+80.00	6.08	MEDIAN	230	
PR US20/HARRISON	1313+25.26	1314+80.00	VAR 38-66.7	WB LANES	862	
PR US20/HARRISON	1315+80.00	1316+91.82	VARIES	RAMP A PAVEMENT	308	
PR US20/HARRISON	1315+80.00	1316+92.39	6.08	RAMP A ISLAND	150	
PR US20/HARRISON	1315+80.00	1317+99.47	VARIES	RAMP B PAVEMENT	466	
PR US20/HARRISON	1315+80.00	1317+99.47	6.08	RAMP B ISLAND	311	
PR US20/HARRISON	1316+95.70	1322+80.00	6.08	MEDIAN	925	
PR US20/HARRISON	1315+80.00	1322+80.00	6.08	NE C&G	491	
PR US20/HARRISON	1315+80.00	1322+80.00	6.08	SE C&G	493	
PR US20/HARRISON	1315+80.00	1322+80.00	VARIES	EB LANES	2,502	
PR US20/HARRISON	1315+80.00	1322+80.00	VARIES	WB LANES	3,606	
PR US20/HARRISON	1330+80.00	1332+19.28	36	EB LANES	558	
PR US20/HARRISON	1330+80.00	1333+80.00	6.08	EB OUT C&G	203	
PR US20/HARRISON	1330+80.00	1332+19.28	6.08	MEDIAN	95	
PR US20/HARRISON	1330+80.00	1333+80.00	36	WB LANES	1,200	
PR US20/HARRISON	1330+80.00	1333+80.00	6.08	WB OUT C&G	203	
PR US20/HARRISON	1332+19.28	1333+80.00	VAR 36-58.2	EB LANES	825	
PR US20/HARRISON	1332+19.28	1333+80.00	6.08	MEDIAN	109	
PR US20/HARRISON	1337+00.00	1338+32.34	4.58	EB OUT C&G	68	
PR US20/HARRISON	1337+00.00	1337+26.30	4.58	WB OUT C&G	17	

30300112 AGGREGATE SUBGRADE IMPROVEMENT, 12" 80% FED / 20% STATE						
ROAD	STA	STA	WIDTH	DESCRIPTION	SQ YD	REMARKS
PR RAMP A	102+84.63	106+00.00	VAR 24-16	RAMP PVMT	710	
PR RAMP A	106+00.00	110+77.23	16	RAMP PVMT	849	
PR RAMP A	102+84.63	110+77.23	7.5	RT SHLD	661	
PR RAMP A	102+84.63	102+85.98	7.5	LT SLD	2	
PR RAMP A	102+85.98	107+65.06	5.5	LT SLD	293	
PR RAMP B	217+13.88	221+91.57	24	RAMP PVMT	1,274	
PR RAMP B	221+91.57	224+70.38	VAR 24-36	RAMP PVMT	934	
PR RAMP B	224+70.38	225+74.38	36	RAMP PVMT	416	
PR RAMP B	217+13.88	225+74.38	11.5	RT SHLD	1,100	
PR RAMP B	217+13.88	225+74.38	7.5	LT SLD	718	
PR RAMP C	300+00.00	300+95.01	VAR 6-12	RT SHOULDER	91	
PR RAMP C	300+95.01	304+04.26	6.5	RT SHOULDER	207	
PR RAMP C	304+04.26	312+45.76	16	RAMP PVMT	1,496	
PR RAMP C	312+45.76	314+69.76	VAR 16-24	RAMP PVMT	488	
PR RAMP C	314+69.76	317+29.54	24	RAMP PVMT	693	
PR RAMP C	304+04.26	317+29.54	7.5	RT SHLD	1,105	
PR RAMP C	306+69.02	317+29.54	5.5	LT SLD	649	
PR RAMP D	402+33.25	406+84.15	VAR 24-16	RAMP PVMT	1,003	
PR RAMP D	406+84.15	412+00.00	16	RAMP PVMT	918	
PR RAMP D	402+33.25	412+00.00	7.5	RT SHLD	806	
PR RAMP D	402+33.25	409+86.82	5.5	LT SHLD	461	
PR NB I-39	12+36.38	13+49.41	24	NB LANES	932	
PR NB I-39	12+36.38	13+49.41	VAR 4.0-6.3	RAMP A GORE	329	
PR NB I-39	12+36.38	14+69.80	20	NB IN SHLD	1,321	
PR NB I-39	13+49.41	17+52.45	VAR 36-44	NB LANES	1,823	
PR NB I-39	13+49.41	15+13.70	6.5	NB OUT SHLD	119	
PR NB I-39	15+13.70	17+52.45	VAR 6.5-12.5	NB OUT SHLD	238	
PR NB I-39	17+52.45	22+00.00	36	NB LANES	1,791	
PR NB I-39	17+52.45	22+00.00	12.5	NB OUT SHLD	622	
PR NB I-39	17+52.45	21+29.92	12.5	NB IN SHLD	731	
PR NB I-39	21+29.92	22+00.00	VAR 9-12	NB IN SHLD	86	
PR NB I-39	22+00.00	24+02.52	VAR	NB IN SHLD	264	
PR SB I-39	1306+33.75	1311+17.51	36	SB LANES	1,936	
PR SB I-39	1306+33.75	1310+57.92	VAR	SB IN SHLD	760	
PR SB I-39	1306+33.75	1308+52.91	12	SB OUT SHLD	293	
PR SB I-39	1308+52.91	1311+17.51	VAR 6.3-20.3	RAMP C GORE	392	
PR SB I-39	1311+17.51	1319+95.00	36'-58.3'	SB LANES	2,142	
PR SB I-39	1315+22.06	1319+95.00	36	SB LANES	1,892	
PR SB I-39	1311+17.51	1319+95.00	12.5	LT SHOULDER	1,170	
PR SB I-39	1315+22.06	1319+95.00	12.5	RT SHOULDER	631	
PR SB I-39	2745+97.20	2747+00.00	VAR	LT SHOULDER	144	
SOUTH MALL DR	298+49.09	299+55.35			1,362	
SOUTH MALL DR	300+33.42	303+37.00			3,321	
				SUBTOTAL	73,761	
				GRAND TOTAL	73,761	

NOTE: AN ADDITIONAL 1' EXTENSION IS INCLUDED FOR COMPACTION.
VARIES WIDTHS MEASURED IN CADD.

30300121 AGGREGATE SUBGRADE IMPROVEMENT, 21" 80% FED / 20% STATE						
ROAD	STA	STA	WIDTH	DESCRIPTION	SQ YD	REMARKS
PR HARRISON	129+75.00	130+75.00	36	EB LANES	400	
PR HARRISON	129+75.00	130+75.00	6.08	EB OUT C&G	68	
PR HARRISON	129+75.00	130+75.00	6	MEDIAN	67	
PR HARRISON	129+75.00	130+75.00	48	WB LANES	533	
PR HARRISON	129+75.00	130+75.00	6.08	WB OUT C&G	68	
				SUBTOTAL	1,136	
				GRAND TOTAL	1,136	

NOTE: AN ADDITIONAL 1' EXTENSION IS INCLUDED FOR COMPACTION.

30300118 AGGREGATE SUBGRADE IMPROVEMENT, 18" 80% FED / 20% STATE						
ROAD	STA	STA	WIDTH	DESCRIPTION	SQ YD	REMARKS
PR HARRISON	145+75.00	150+25.00	VARIES	EB LANES	1,629	
PR HARRISON	145+75.00	150+25.00	VARIES	RAMP D PVMT	1,216	
PR HARRISON	145+75.00	150+25.00	VARIES	RAMP D RT SHLD	61	
PR HARRISON	145+75.00	150+25.00	VARIES	RAMP D LT SHLD	25	
PR HARRISON	145+75.00	150+25.00	6.08	RAMP D ISLAND	251	
PR HARRISON	145+75.00	150+25.00	6.08	SW CORNER C&G	205	
PR HARRISON	145+75.00	150+25.00	6.08	SE CORNER C&G	159	
PR HARRISON	145+75.00	150+25.00	6.08	W MEDIAN	237	
PR HARRISON	145+75.00	150+25.00	6.08	E MEDIAN	196	
PR HARRISON	145+75.00	150+25.00	VARIES	WB LANES	2,014	
PR HARRISON	145+75.00	150+25.00	6.08	RAMP C ISLAND	268	
PR HARRISON	145+75.00	150+25.00	VARIES	RAMP C PVMT	825	
PR HARRISON	145+75.00	150+25.00	VARIES	RAMP C RT SHLD	26	
PR HARRISON	145+75.00	150+25.00	VARIES	RAMP C LT SHLD	15	
PR HARRISON	145+75.00	150+25.00	6.08	NW CORNER C&G	139	
PR HARRISON	145+75.00	150+25.00	6.08	NE CORNER C&G	63	
PR US 20/HARRISON	1322+80.00	1326+80.00	36	EB LANES	1,600	
PR US 20/HARRISON	1322+80.00	1326+80.00	6.08	EB OUT C&G	270	
PR US 20/HARRISON	1322+80.00	1326+80.00	6.08	MEDIAN	541	
PR US 20/HARRISON	1322+80.00	1326+80.00	36	WB LANES	1,600	
PR US 20/HARRISON	1322+80.00	1326+80.00	6.08	WB OUT C&G	270	
				SUBTOTAL	11,610	
				GRAND TOTAL	11,610	

NOTE: AN ADDITIONAL 1' EXTENSION IS INCLUDED FOR COMPACTION.
VARIES WIDTHS MEASURED IN CADD.

30300124 AGGREGATE SUBGRADE IMPROVEMENT, 24" 80% FED / 20% STATE						
ROAD	STA	STA	WIDTH	DESCRIPTION	SQ YD	REMARKS
PR US 20/HARRISON	1326+80.00	1330+80.00	36	EB LANES	1,600	
PR US 20/HARRISON	1326+80.00	1330+80.00	6.08	EB OUT C&G	270	
PR US 20/HARRISON	1326+80.00	1330+80.00	6.08	MEDIAN	540	
PR US 20/HARRISON	1326+80.00	1330+80.00	36	WB LANES	1,600	
PR US 20/HARRISON	1326+80.00	1330+80.00	6.08	WB OUT C&G	270	
				SUBTOTAL	4,280	
				GRAND TOTAL	4,280	

NOTE: AN ADDITIONAL 1' EXTENSION IS INCLUDED FOR COMPACTION.

30300130 AGGREGATE SUBGRADE IMPROVEMENT, 30" 80% FED / 20% STATE						
ROAD	STA	STA	WIDTH	DESCRIPTION	SQ YD	REMARKS
PR HARRISON	134+75.00	135+75.00	36	EB LANES	400	
PR HARRISON	134+75.00	135+75.00	6.08	EB OUT C&G	68	
PR HARRISON	134+75.00	135+75.00	6.08	MEDIAN	135	
PR HARRISON	134+75.00	135+75.00	36	WB LANES	400	
PR HARRISON	134+75.00	135+75.00	6.08	WB OUT C&G	68	
PR EB DDI	3003+75.00	3004+76.14	VARIES	EB LANES	229	
PR EB DDI	3003+75.00	3004+76.14	38	EB LANES	427	
PR EB DDI	3003+75.00	3004+76.14	6.08	EB OUT C&G	68	
PR HARRISON	144+75.00	145+75.00	6.08	MEDIAN	135	
PR WB DDI	2019+52.06	2020+52.60	VARIES	WB LANES	556	
PR WB DDI	2019+52.06	2020+52.60	6.08	WB OUT C&G	68	
				SUBTOTAL	2,554	
				GRAND TOTAL	2,554	

NOTE: AN ADDITIONAL 1' EXTENSION IS INCLUDED FOR COMPACTION.
IF WIDTH IS NOTED AS VARIES, AREA MEASURED IN CADD

MODEL: Default
FILE NAME: pw://benesch-pw.bentley.com:benesch-gpw-21/Documents/10800s/10800.00/Eng. Docs/CAD Sheets/General/D0764R71-2DI-int-SCH-09.dgn

benesch
Allied Benesch & Company
35 W. Wacker Drive, Suite 3300
Chicago, Illinois 60601
312.205.0450 Job No. 10800.00

USER NAME = agibson	DESIGNED - A.GIBSON	REVISED -	
	DRAWN - J.MAJCHER	REVISED -	
PLOT SCALE = 0.167 '/ in.	CHECKED - J.TARDY	REVISED -	
PLOT DATE = 10/27/2023	DATE - 10/13/2023	REVISED -	

STATE OF ILLINOIS
DEPARTMENT OF TRANSPORTATION

SCHEDULE OF QUANTITIES
PAVEMENT

SCALE: N/A | SHEET 11 OF 48 SHEETS | STA. | TO STA.

F.A.* RTE.	SECTION	COUNTY	TOTAL SHEETS	SHEET NO.
*	(5)RS & (5&5HB)RC	WINNEBAGO	1279	59
		CONTRACT NO. 64R71		
	ILLINOIS	FED. AID PROJECT		

* FAI ROUTE 39 (I-39) & FAP ROUTE 525 (US 20)

30300136
AGGREGATE SUBGRADE IMPROVEMENT
80% FED / 20% STATE

ROAD	STA	STA	WIDTH	DESCRIPTION	SQ YD	REMARKS
PR US 20/HARRISON	1314+80.00	1315+80.00	VARIES	RAMP B RT SHLD	71	
PR US 20/HARRISON	1314+80.00	1315+80.00	VARIES	RAMP B LT SHLD	23	
PR US 20/HARRISON	1314+80.00	1315+80.00	VARIES	RAMP B C&G	78	
PR US 20/HARRISON	1314+80.00	1315+80.00	VARIES	RAMP B ISLAND	99	
PR US 20/HARRISON	1314+80.00	1315+80.00	VARIES	RAMP B PVMT	918	
PR US 20/HARRISON	1314+80.00	1315+80.00	VARIES	WB DDI PVMT	439	
PR US 20/HARRISON	1314+80.00	1315+80.00	VARIES	MEDIAN	112	
PR US 20/HARRISON	1314+80.00	1315+80.00	VARIES	EB DDI PVMT	297	
PR US 20/HARRISON	1314+80.00	1315+80.00	VARIES	RAMP A ISLAND	181	
PR US 20/HARRISON	1314+80.00	1315+80.00	VARIES	RAMP A PVMT	815	
PR US 20/HARRISON	1314+80.00	1315+80.00	VARIES	RAMP A C&G	97	
PR US 20/HARRISON	1314+80.00	1315+80.00	VARIES	RAMP A LT SHLD	29	
PR US 20/HARRISON	1314+80.00	1315+80.00	VARIES	RAMP A RT SHLD	113	
PR US 20/HARRISON	1333+80.00	1334+19.28	VARIES	EB LANES	259	
PR US 20/HARRISON	1334+19.28	1337+00.00	60	EB LANES	1,871	
PR US 20/HARRISON	1333+80.00	1337+00.00	6.08	EB OUT C&G	216	
PR US 20/HARRISON	1333+80.00	1337+00.00	VARIES	MEDIAN	215	
PR US 20/HARRISON	1333+80.00	1337+00.00	36	WB LANES	1,280	
PR US 20/HARRISON	1333+80.00	1337+00.00	6.08	WB OUT C&G	216	
PR HARRISON	140+75.00	141+00.00	36	EB LANES	100	
PR EB DDI	3000+00.00	3001+75.00	36	EB LANES	700	
PR HARRISON	140+75.00	142+75.00	6.08	EB OUT C& G	135	
PR HARRISON	140+75.00	142+75.00	6.08	MEDIAN	270	
PR HARRISON	140+75.00	141+00.00	VARIES	WB LANES	122	
PR WB DDI	2022+52.72	2024+27.72	VARIES	WB LANES	894	
PR HARRISON	140+75.00	142+75.00	6.08	WB OUT C&G	135	
				SUBTOTAL	9,685	
				GRAND TOTAL	9,685	

NOTE: AN ADDITIONAL 1' EXTENSION IS INCLUDED FOR COMPACTION.
VARIES WIDTH AREAS MEASURED IN CADD

31101400
SUBBASE GRANULAR MATERIAL, TYPE B 6"
80% FED / 20% STATE

ROAD	STA	STA	LT/RT/CT	DESCRIPTION	SQ YD	REMARKS
PR HARRISON	116+37.72	125+62.47	CT	MEDIAN	461	
PR HARRISON	127+14.95	147+39.95	CT	MEDIAN	2,976	
PR HARRISON	147+66.12	149+09.58	RT	RAMP D ISLAND	581	
PR HARRISON	148+89.19	151+86.03	CT	MEDIAN	828	
PR US 20/HARRISON	1314+86.00	1316+79.00	LT	RAMP A ISLAND	742	
PR US 20/HARRISON	1312+57.78	1315+53.84	CT	MEDIAN	870	
PR US 20/HARRISON	1315+31.39	1317+96.53	RT	RAMP B ISLAND	1,082	
PR US 20/HARRISON	1317+03.56	1337+00.00	CT	MEDIAN	3,014	
PR HARRISON	147+34.00	149+09.00	LT	RAMP C ISLAND	428	
				SUBTOTAL	10,982	
				GRAND TOTAL	10,982	

NOTE: AREAS MEASURED IN CADD

31200500
STABILIZED SUBBASE - HOT-MIX ASPHALT, 4"
80% FED / 20% STATE

ROAD	STA	STA	WIDTH	DESCRIPTION	SQ YD	REMARKS
PR HARRISON	123+50.00	125+69.46	48	EB LANES	1,171	
PR HARRISON	123+50.00	124+47.56	1.5	EB SHLD	17	
PR HARRISON	124+47.56	124+82.34	4.08	EB OUT C&G	16	
PR HARRISON	123+50.00	125+69.46	6	MEDIAN	147	
PR HARRISON	123+50.00	125+69.46	24	WB LANES	586	
PR HARRISON	123+50.00	124+06.35	1.5	WB SHLD	10	
PR HARRISON	124+06.35	124+39.78	4.08	WB OUT C&G	16	
PR HARRISON	125+69.46	126+24.86	78	PAVEMENT	481	
PR HARRISON	126+24.86	127+08.44	78	PAVEMENT	725	
PR HARRISON	127+08.44	134+75.00	36	EB LANES	3,067	
PR HARRISON	127+08.44	131+12.70	6	MEDIAN	270	
PR HARRISON	127+08.44	127+46.70	36	WB LANES	154	
PR HARRISON	127+46.70	131+12.70	48	WB LANES	1,952	
PR HARRISON	127+46.70	144+75.00	4.08	WB OUT C&G	784	
PR HARRISON	128+28.00	144+75.00	4.08	EB OUT C&G	747	
PR HARRISON	131+12.70	133+32.70	VAR 6-18	MEDIAN	151	
PR HARRISON	131+12.70	133+32.70	VAR 36-48	WB LANES	1,040	
PR HARRISON	133+32.70	144+19.23	18	MEDIAN	744	
PR HARRISON	133+32.70	134+75.00	48	WB LANES	759	
PR HARRISON	134+75.00	141+00.00	36	EB LANES	2,500	
PR HARRISON	134+75.00	137+39.12	36	WB LANES	1,056	
PR HARRISON	137+39.12	140+75.00	VAR 36-43.5	WB LANES	1,483	
PR HARRISON	140+75.00	141+00.00	VARIES	WB LANES	122	
PR HARRISON	142+75.00	144+48.18	36	EB LANES	693	
PR HARRISON	142+75.00	143+69.12	VAR 47.9-50	WB LANES	512	
PR HARRISON	144+48.18	144+75.00	VAR 36-36.3	EB LANES	108	
PR HARRISON	144+19.23	144+75.00	VAR 18-21.8	MEDIAN	39	
PR HARRISON	143+69.12	144+75.00	VAR 50-50.3	WB LANES	589	
PR HARRISON	144+75.00	145+75.00	VARIES	MEDIAN	68	
PR HARRISON	145+75.00	150+25.00	VARIES	EB LANES	1,593	
PR HARRISON	145+75.00	150+25.00	VARIES	RAMP D PVMT	1,118	
PR HARRISON	145+75.00	150+25.00	VARIES	RAMP D RT SHLD	13	
PR HARRISON	145+75.00	150+25.00	VARIES	RAMP D LT SHLD	7	
PR HARRISON	145+75.00	150+25.00	VARIES	RAMP D ISLAND	127	
PR HARRISON	145+75.00	150+25.00	VARIES	SW CORNER C&G	138	
PR HARRISON	145+75.00	150+25.00	VARIES	SE CORNER C&G	107	
PR HARRISON	145+75.00	150+25.00	VARIES	W MEDIAN	207	
PR HARRISON	145+75.00	150+25.00	VARIES	E MEDIAN	175	
PR HARRISON	145+75.00	150+25.00	VARIES	WB LANES	1,989	
PR HARRISON	145+75.00	150+25.00	VARIES	RAMP C ISLAND	136	
PR HARRISON	145+75.00	150+25.00	VARIES	RAMP C PVMT	821	
PR HARRISON	145+75.00	150+25.00	VARIES	RAMP C RT SHLD	3	
PR HARRISON	145+75.00	150+25.00	VARIES	RAMP C LT SHLD	6	
PR HARRISON	145+75.00	150+25.00	VARIES	NW CORNER C&G	138	
PR HARRISON	145+75.00	150+25.00	VARIES	NE CORNER C&G	51	
PR HARRISON	150+25.00	152+52.04	VAR 50-38	WB LANES	1,023	
PR HARRISON	150+25.00	153+08.66	4.08	WB OUT C&G	129	
PR HARRISON	150+25.00	153+08.66	26	EB LANES	552	
PR HARRISON	152+52.04	153+08.66	38	WB LANES	151	
PR EB DDI	3003+75.00	3004+76.14	VARIES	EB LANES	229	
PR EB DDI	3003+75.00	3004+76.14	38	EB LANES	427	
PR EB DDI	3003+75.00	3004+76.14	4.08	EB OUT C&G	46	
PR WB DDI	2019+52.06	2020+52.60	VARIES	WB LANES	556	
PR WB DDI	2019+52.06	2020+52.60	4.08	WB OUT C&G	46	
PR EB DDI	3000+00.00	3001+75.00	36	EB LANES	700	
PR WB DDI	2022+52.72	2024+27.72	VARIES	WB LANES	894	
PR US 20/HARRISON	1311+13.21	1313+25.26	38	WB LANES	640	
PR US 20/HARRISON	1311+13.21	1314+80.00	4.08	WB OUT C&G	167	
PR US 20/HARRISON	1311+13.21	1312+00.00	26	EB LANES	116	
PR US 20/HARRISON	1311+13.21	1314+80.00	4.08	EB OUT C&G	12	
PR US 20/HARRISON	1312+00.00	1314+80.00	VAR 26-60.7	EB LANES	1,060	
PR US 20/HARRISON	1312+57.64	1314+80.00	VAR 14.1-46	MEDIAN	717	
PR US 20/HARRISON	1313+25.26	1314+80.00	VAR 38-66.7	WB LANES	795	
PR US 20/HARRISON	1314+80.00	1315+80.00	VARIES	RAMP B RT SHLD	10	
PR US 20/HARRISON	1314+80.00	1315+80.00	VARIES	RAMP B LT SHLD	4	
PR US 20/HARRISON	1314+80.00	1315+80.00	VARIES	RAMP B C&G	39	
PR US 20/HARRISON	1314+80.00	1315+80.00	VARIES	RAMP B ISLAND	276	
PR US 20/HARRISON	1314+80.00	1315+80.00	VARIES	RAMP B PVMT	903	
PR US 20/HARRISON	1314+80.00	1315+80.00	VARIES	WB DDI PVMT	434	

31200500
STABILIZED SUBBASE - HOT-MIX ASPHALT, 4"
80% FED / 20% STATE

ROAD	STA	STA	WIDTH	DESCRIPTION	SQ YD	REMARKS
PR US 20/HARRISON	1314+80.00	1315+80.00	VARIES	MEDIAN	303	
PR US 20/HARRISON	1314+80.00	1315+80.00	VARIES	EB DDI PVMT	299	
PR US 20/HARRISON	1314+80.00	1315+80.00	VARIES	RAMP A ISLAND	222	
PR US 20/HARRISON	1314+80.00	1315+80.00	VARIES	RAMP A PVMT	798	
PR US 20/HARRISON	1314+80.00	1315+80.00	VARIES	RAMP A C&G	65	
PR US 20/HARRISON	1314+80.00	1315+80.00	VARIES	RAMP A LT SHLD	8	
PR US 20/HARRISON	1314+80.00	1315+80.00	VARIES	RAMP A RT SHLD	24	
PR US 20/HARRISON	1315+80.00	1316+91.82	VARIES	RAMP A PAVEMENT	299	
PR US 20/HARRISON	1315+80.00	1317+99.47	VARIES	RAMP B PAVEMENT	459	
PR US 20/HARRISON	1315+80.00	1322+80.00	VARIES	NE C&G	329	
PR US 20/HARRISON	1315+80.00	1322+80.00	VARIES	SE C&G	331	
PR US 20/HARRISON	1315+80.00	1322+80.00	VARIES	EB LANES	3,630	
PR US 20/HARRISON	1315+80.00	1322+80.00	VARIES	WB LANES	2,542	
PR US 20/HARRISON	1322+80.00	1332+19.28	36	EB LANES	3,757	
PR US 20/HARRISON	1322+80.00	1338+32.34	4.08	EB OUT C&G	704	
PR US 20/HARRISON	1322+80.00	1332+19.28	18	MEDIAN	643	
PR US 20/HARRISON	1322+80.00	1337+00.00	36	WB LANES	5,680	
PR US 20/HARRISON	1322+80.00	1337+00.00	4.08	WB OUT C&G	644	
PR US 20/HARRISON	1332+19.28	1333+80.00	VAR 36-58.2	EB LANES	808	
PR US 20/HARRISON	1332+19.28	1333+80.00	VAR 18-6.9	MEDIAN	56	
PR US 20/HARRISON	1333+80.00	1334+19.28	VARIES	EB LANES	259	
PR US 20/HARRISON	1334+19.28	1337+00.00	60	EB LANES	1,871	
PR US 20/HARRISON	1333+80.00	1337+00.00	VARIES	MEDIAN	215	
PR US 20/HARRISON	1337+00.00	1337+26.30	VAR 4.08-8.74	WB OUT C&G	12	
PR RAMP A	100+00.00	102+84.63	VARIES	NEAR ISLAND	1,407	
PR RAMP A	102+84.63	106+00.00	VAR 24-16	RAMP PVMT	710	
PR RAMP A	106+00.00	110+77.23	16	RAMP PVMT	849	
PR RAMP A	102+84.63	110+77.23	1.5	RT SHLD	133	
PR RAMP A	102+84.63	102+85.98	1.5	LT SHLD	1	
PR RAMP A	102+85.98	107+65.06	1.5	LT SHLD	80	
PR RAMP B	217+13.88	221+91.57	24	RAMP PVMT	1,274	
PR RAMP B	221+91.57	224+70.38	VAR 24-36	RAMP PVMT	934	
PR RAMP B	224+70.38	225+74.38	36	RAMP PVMT	416	
PR RAMP B	217+13.88	225+74.38	1.5	RT SHLD	144	
PR RAMP B	217+13.88	225+74.38	1.5	LT SHLD	144	
PR RAMP B	225+74.38	227+92.42	VARIES	NEAR ISLAND	1,510	
PR RAMP C	300+00.00	300+95.01	1.5	RT SHOULDER	16	
PR RAMP C	300+95.01	304+04.26	1.5	RT SHOULDER	52	
PR RAMP C	304+04.26	312+45.76	16	RAMP PVMT	1,496	
PR RAMP C	312+45.76	314+69.76	VAR 16-24	RAMP PVMT	488	
PR RAMP C	314+69.76	317+29.54	24	RAMP PVMT	693	
PR RAMP C	304+04.26	317+29.54	1.5	RT SHLD	221	
PR RAMP C	306+69.02	317+29.54	1.5	LT SHLD	177	
PR RAMP C	317+29.54	318+95.32	VARIES	NEAR ISLAND	822	
PR RAMP D	400+00.00	402+33.25	VARIES	NEAR ISLAND	1,329	
PR RAMP D	402+33.25	406+84.15	VAR 24-16	RAMP PVMT	1,003	
PR RAMP D	406+84.15	412+00.00	16	RAMP PVMT	918	
PR RAMP D	402+33.25	412+00.00	1.5	RT SHLD	162	
PR RAMP D	402+33.25	409+86.82	1.5	LT SHLD	126	
PR NB I-39	10+00.00	13+49.41	24	NB LANES	932	
PR NB I-39	10+00.00	13+49.41	VAR 4.0-18.0	RAMP A GORE	329	
PR NB I-39	10+00.00	22+00.00	1.5	NB IN SHLD	200	
PR NB I-39	13+49.41	17+52.45	VAR	NB LANES	1,823	
PR NB I-39	13+49.41	15+13.70	1.5	NB OUT SHLD	28	
PR NB I-39	15+13.70	17+52.45	1.5	NB OUT SHLD	40	
PR NB I-39	17+52.45	22+00.00	36	NB LANES	1,785	
PR NB I-39	17+52.45	22+00.00	1.5	NB OUT SHLD	75	
PR SB I-39	1306+33.75	1311+17.51	36	SB LANES	1,934	
PR SB I-39	1306+33.75	1311+28.05	1.5	SB IN SHLD	83	
PR SB I-39	1306+33.75	1308+52.91	1.5	RT SHOULDER	37	
PR SB I-39	1308+52.91	1311+17.51	VAR 6.3-20.3	RAMP C GORE	392	
PR SB I-39	1311+17.51	1319+95.00	36'-58.3'	SB LANES	4,034	
PR SB I-39	1311+28.05	1319+95.00	1.5	SB OUT SHLD	145	
PR SB I-39	1315+22.06	1319+95.00	1.5	RT SHOULDER	79	
				SUBTOTAL	87,541	
				GRAND TOTAL	87,541	

NOTE: AT C&G AND SHLD LOCATIONS A 1.5' EXTENSION ADDED FOR LENGTH OF SECTION AND VARIES WIDTHS MEASURED IN CADD.

40600275
BITUMINOUS MATERIALS (PRIME COAT)
100% TOLLWAY

ROAD	STA	STA	LB/SF	APPLICATIONS	TOTAL (LBS)	REMARKS
PR I-39	2745+97.20	2747+00.00	0.25	1	1,237	
SUBTOTAL					2,055	

80% FED / 20% STATE

ROAD	STA	STA	LB/SF	APPLICATIONS	TOTAL (LBS)	REMARKS
PR US20/HARRISON	1311+13.21	1313+25.26	0.25	1	1,440	
PR US20/HARRISON	1311+13.21	1314+80.00	0.25	1	375	
PR US20/HARRISON	1311+13.21	1312+00.00	0.25	1	261	
PR US20/HARRISON	1311+13.21	1314+80.00	0.25	1	26	
PR US20/HARRISON	1312+00.00	1314+80.00	0.25	1	2,384	
PR US20/HARRISON	1312+57.64	1314+80.00	0.25	1	1,613	
PR US20/HARRISON	1313+25.26	1314+80.00	0.25	1	1,788	
PR US 20/HARRISON	1314+80.00	1315+80.00	0.25	1	22	
PR US 20/HARRISON	1314+80.00	1315+80.00	0.25	1	10	
PR US 20/HARRISON	1314+80.00	1315+80.00	0.25	1	89	
PR US 20/HARRISON	1314+80.00	1315+80.00	0.25	1	621	
PR US 20/HARRISON	1314+80.00	1315+80.00	0.25	1	2,032	
PR US 20/HARRISON	1314+80.00	1315+80.00	0.25	1	977	
PR US 20/HARRISON	1314+80.00	1315+80.00	0.25	1	682	
PR US 20/HARRISON	1314+80.00	1315+80.00	0.25	1	674	
PR US 20/HARRISON	1314+80.00	1315+80.00	0.25	1	499	
PR US 20/HARRISON	1314+80.00	1315+80.00	0.25	1	1,796	
PR US 20/HARRISON	1314+80.00	1315+80.00	0.25	1	146	
PR US 20/HARRISON	1314+80.00	1315+80.00	0.25	1	17	
PR US 20/HARRISON	1314+80.00	1315+80.00	0.25	1	53	
PR US20/HARRISON	1315+80.00	1316+91.82	0.25	1	672	
PR US20/HARRISON	1315+80.00	1317+99.47	0.25	1	1,031	
PR US20/HARRISON	1315+80.00	1322+80.00	0.25	1	739	
PR US20/HARRISON	1315+80.00	1322+80.00	0.25	1	743	
PR US20/HARRISON	1315+80.00	1322+80.00	0.25	1	8,167	
PR US20/HARRISON	1315+80.00	1322+80.00	0.25	1	5,718	
PR US 20/HARRISON	1322+80.00	1332+19.28	0.25	1	8,454	
PR US 20/HARRISON	1322+80.00	1338+32.34	0.25	1	1,584	
PR US 20/HARRISON	1322+80.00	1332+19.28	0.25	1	1,447	
PR US 20/HARRISON	1322+80.00	1337+00.00	0.25	1	12,780	
PR US 20/HARRISON	1322+80.00	1337+00.00	0.25	1	1,449	
PR US20/HARRISON	1332+19.28	1333+80.00	0.25	1	1,817	
PR US20/HARRISON	1332+19.28	1333+80.00	0.25	1	124	
PR US 20/HARRISON	1333+80.00	1334+19.28	0.25	1	584	
PR US 20/HARRISON	1334+19.28	1337+00.00	0.25	1	4,211	
PR US 20/HARRISON	1333+80.00	1337+00.00	0.25	1	484	
PR US20/HARRISON	1337+00.00	1337+26.30	0.25	1	27	
PR HARRISON	126+24.86	127+08.44	0.25	1	1,630	
PR HARRISON	127+08.44	134+75.00	0.25	1	6,900	
PR HARRISON	127+08.44	131+12.70	0.25	1	607	
PR HARRISON	127+08.44	127+46.70	0.25	1	345	
PR HARRISON	127+46.70	131+12.70	0.25	1	4,392	
PR HARRISON	127+46.70	144+75.00	0.25	1	1,763	
PR HARRISON	128+28.00	144+75.00	0.25	1	1,680	
PR HARRISON	131+12.70	133+32.70	0.25	1	339	
PR HARRISON	131+12.70	133+32.70	0.25	1	2,340	
PR HARRISON	133+32.70	144+19.23	0.25	1	1,674	
PR HARRISON	133+32.70	134+75.00	0.25	1	1,708	
PR HARRISON	134+75.00	141+00.00	0.25	1	5,625	
PR HARRISON	134+75.00	137+39.12	0.25	1	2,378	
PR HARRISON	137+39.12	140+75.00	0.25	1	3,337	
PR HARRISON	140+75.00	141+00.00	0.25	1	274	
PR HARRISON	142+75.00	144+48.18	0.25	1	1,559	
PR HARRISON	142+75.00	143+69.12	0.25	1	1,152	
PR HARRISON	144+48.18	144+75.00	0.25	1	243	
PR HARRISON	144+19.23	144+75.00	0.25	1	86	
PR HARRISON	143+69.12	144+75.00	0.25	1	1,326	
PR HARRISON	144+75.00	145+75.00	0.25	1	154	
PR HARRISON	145+75.00	150+25.00	0.25	1	3,584	
PR HARRISON	145+75.00	150+25.00	0.25	1	2,517	
PR HARRISON	145+75.00	150+25.00	0.25	1	30	
PR HARRISON	145+75.00	150+25.00	0.25	1	17	
PR HARRISON	145+75.00	150+25.00	0.25	1	286	
PR HARRISON	145+75.00	150+25.00	0.25	1	311	

40600275
BITUMINOUS MATERIALS (PRIME COAT)
80% FED / 20% STATE

ROAD	STA	STA	LB/SF	APPLICATIONS	TOTAL (LBS)	REMARKS
PR HARRISON	145+75.00	150+25.00	0.25	1	240	
PR HARRISON	145+75.00	150+25.00	0.25	1	466	
PR HARRISON	145+75.00	150+25.00	0.25	1	395	
PR HARRISON	145+75.00	150+25.00	0.25	1	4,475	
PR HARRISON	145+75.00	150+25.00	0.25	1	306	
PR HARRISON	145+75.00	150+25.00	0.25	1	1,849	
PR HARRISON	145+75.00	150+25.00	0.25	1	7	
PR HARRISON	145+75.00	150+25.00	0.25	1	14	
PR HARRISON	145+75.00	150+25.00	0.25	1	311	
PR HARRISON	145+75.00	150+25.00	0.25	1	115	
PR HARRISON	150+25.00	152+52.04	0.25	1	2,302	
PR HARRISON	150+25.00	153+08.66	0.25	1	290	
PR HARRISON	150+25.00	153+08.66	0.25	1	1,241	
PR HARRISON	152+52.04	153+08.66	0.25	1	340	
PR EB DDI	3003+75.00	3004+76.14	0.25	1	515	
PR EB DDI	3003+75.00	3004+76.14	0.25	1	961	
PR EB DDI	3003+75.00	3004+76.14	0.25	1	104	
PR WB DDI	2019+52.06	2020+52.60	0.25	1	1,252	
PR WB DDI	2019+52.06	2020+52.60	0.25	1	103	
PR EB DDI	3000+00.00	3001+75.00	0.25	1	1,575	
PR WB DDI	2022+52.72	2024+27.72	0.25	1	2,011	
PR RAMP A	100+00.00	102+84.63	0.25	1	3,166	
PR RAMP A	102+84.63	106+00.00	0.25	1	1,596	
PR RAMP A	106+00.00	110+77.23	0.25	1	1,909	
PR RAMP A	102+84.63	110+77.23	0.25	1	298	
PR RAMP A	102+84.63	102+85.98	0.25	1	1	
PR RAMP A	102+85.98	107+65.06	0.25	1	180	
PR RAMP B	217+13.88	221+91.57	0.25	1	2,867	
PR RAMP B	221+91.57	224+70.38	0.25	1	2,102	
PR RAMP B	224+70.38	225+74.38	0.25	1	936	
PR RAMP B	217+13.88	225+74.38	0.25	1	323	
PR RAMP B	217+13.88	225+74.38	0.25	1	323	
PR RAMP B	225+74.38	227+92.42	0.25	1	3,397	
PR RAMP C	304+04.26	312+45.76	0.25	1	3,366	
PR RAMP C	312+45.76	314+69.76	0.25	1	1,096	
PR RAMP C	314+69.76	317+29.54	0.25	1	1,559	
PR RAMP C	304+04.26	317+29.54	0.25	1	497	
PR RAMP C	306+69.02	317+29.54	0.25	1	398	
PR RAMP C	317+29.54	318+95.32	0.25	1	1,849	
PR RAMP D	400+00.00	402+33.25	0.25	1	2,990	
PR RAMP D	402+33.25	406+84.15	0.25	1	2,257	
PR RAMP D	406+84.15	412+00.00	0.25	1	2,064	
PR RAMP D	402+33.25	412+00.00	0.25	1	363	
PR RAMP D	402+33.25	409+86.82	0.25	1	283	
PR NB I-39	10+00.00	13+49.41	0.25	1	741	
PR NB I-39	10+00.00	22+00.00	0.25	1	450	
PR NB I-39	13+49.41	15+13.70	0.25	1	62	
PR NB I-39	15+13.70	17+52.45	0.25	1	90	
PR NB I-39	17+52.45	22+00.00	0.25	1	168	
PR SB I-39	1306+33.75	1311+28.05	0.25	1	186	
PR SB I-39	1311+28.05	1319+95.00	0.25	1	326	
PR SB I-39	1308+52.91	1311+17.51	0.25	1	881	
PR SB I-39	1306+33.75	1308+52.91	0.25	1	83	
RAMP C	300+95.01	304+04.26	0.25	1	116	
RAMP C	300+00.00	300+95.01	0.25	1	36	
PR I-39 SB	1315+22.06	1319+95.00	0.25	1	178	
PR NB I-39	10+00.00	13+49.41	0.25	1	2,097	
PR NB I-39	13+49.41	17+52.45	0.25	1	4,101	
PR NB I-39	17+52.45	22+00.00	0.25	1	4,015	
PR SB I-39	1306+33.75	1311+17.51	0.25	1	4,350	
PR SB I-39	1311+17.51	1319+95.00	0.25	1	9,075	
PR I-39	2747+00.00	2751+53.22	0.25	1	264	
PR I-39	22+00.00	24+02.63	0.25	1	554	
PR US20/HARRISON	123+50.00	124+06.36	0.25	1	81	
PR US20/HARRISON	123+50.00	124+47.56	0.25	1	138	
PR HARRISON	123+50.00	125+69.46	0.25	1	2,634	
PR HARRISON	123+50.00	124+47.56	0.25	1	37	
PR HARRISON	124+47.56	124+82.34	0.25	1	35	

40600275
BITUMINOUS MATERIALS (PRIME COAT)
80% FED / 20% STATE

ROAD	STA	STA	LB/SF	APPLICATIONS	TOTAL (LBS)	REMARKS
PR HARRISON	123+50.00	125+69.46	0.25	1	329	
PR HARRISON	123+50.00	125+69.46	0.25	1	1,317	
PR HARRISON	123+50.00	124+06.35	0.25	1	21	
PR HARRISON	124+06.35	124+39.78	0.25	1	34	
PR HARRISON	125+69.46	126+24.86	0.25	1	1,080	
I-39 NB	16+80.85	17+60.25	0.25	1	606	
PR SUP WEST	394+25.91	404+10.98	0.25	1	2,409	
PR SUP	500+00.00	508+54.41	0.25	1	2,141	
PR SUP	510+26.97	518+08.52	0.25	1	971	
PR SUP	520+08.45	539+99.21	0.25	1	4,962	
SOUTH MALL DR	298+49.09	299+55.43	0.25	1	2,619	
SOUTH MALL DR	300+33.46	303+37.00	0.25	1	6,318	
SUBTOTAL					217,990	
GRAND TOTAL					219,227	

35100500
AGGREGATE BASE COURSE, TYPE A 6"
80% FED / 20% STATE

ROAD	STA	STA	SQ YD	REMARKS
PR HARRISON	134+55.00	135+01.68	48	
PR I-39 NB	16+80.85	17+60.25	269	TEMP CROSSOVER
PR SUP WEST	394+25.92	404+10.98	1,071	
PR SUP	500+00.00	508+54.41	952	
PR SUP	510+26.97	518+08.52	431	
PR SUP	520+08.45	539+99.21	2,205	
SUBTOTAL			4,976	
GRAND TOTAL			4,976	

35101500
AGGREGATE BASE COURSE TYPE B
80% FED / 20% STATE

ROAD	STA	STA	CU YD
CONTINGENCY ITEM			
ASSUME 10 12' WIDE X10' LONG PATCHES, 6" DEPTH			23
SUBTOTAL			23
GRAND TOTAL			23

40600370
LONGITUDINAL JOINT SEALANT
80% FED / 20% STATE

ROAD	STA	STA	DESCRIPTION	FOOT	REMARKS
SOUTH MALL DR	298+49.09	299+55.43	CL	106.33	
SOUTH MALL DR	298+49.09	299+55.43	LT	293.67	
SOUTH MALL DR	298+49.09	299+55.43	RT	299.46	
SOUTH MALL DR	300+27.94	303+37.00	LT	743.06	
SOUTH MALL DR	300+45.86	303+37.00	RT	771.49	
SUBTOTAL				2,214	
GRAND TOTAL				2,214	

40604060
HOT-MIX ASPHALT SURFACE COURSE IL-9.5 MIX D N50
80% FED / 20% STATE

ROAD	STA	STA	SQ YD	UNIT WT (LBS/SY-IN)	THICKNESS (IN)	TON	REMARKS
PR I-39 NB	16+80.85	17+60.25	269.45	112	2	31	TEMP CROSSOVER
PR SUP WEST	394+25.91	404+10.98	1070.72	112	4	240	
PR SUP	500+00.00	508+54.41	951.62	112	4	214	
PR SUP	510+26.97	518+08.52	431.46	112	4	97	
PR SUP	520+08.45	539+99.21	2205.19	112	4	494	
SUBTOTAL						1,076	
GRAND TOTAL						1,076	

NOTE: SQ YD AREA MEASURED IN CADD.

40600290
BITUMINOUS MATERIALS (TACK COAT)
100% TOLLWAY

ROAD	STA	STA	LB/SF	APPLICATIONS	TOTAL (LBS)	REMARKS
PR I-39	2747+00.00	2751+53.11	0.025	2	237	
		SUBTOTAL			237	

80% FED / 20% STATE

ROAD	STA	STA	LB/SF	APPLICATIONS	TOTAL (LBS)	REMARKS
PR US20/HARRISON	1311+13.21	1313+25.26	0.025	1	144	
PR US20/HARRISON	1311+13.21	1314+80.00	0.025	1	38	
PR US20/HARRISON	1311+13.21	1312+00.00	0.025	1	27	
PR US20/HARRISON	1311+13.21	1314+80.00	0.025	1	3	
PR US20/HARRISON	1312+00.00	1314+80.00	0.025	1	239	
PR US20/HARRISON	1312+57.64	1314+80.00	0.025	1	162	
PR US20/HARRISON	1313+25.26	1314+80.00	0.025	1	179	
PR US 20/HARRISON	1314+80.00	1315+80.00	0.025	1	3	
PR US 20/HARRISON	1314+80.00	1315+80.00	0.025	1	1	
PR US 20/HARRISON	1314+80.00	1315+80.00	0.025	1	9	
PR US 20/HARRISON	1314+80.00	1315+80.00	0.025	1	63	
PR US 20/HARRISON	1314+80.00	1315+80.00	0.025	1	204	
PR US 20/HARRISON	1314+80.00	1315+80.00	0.025	1	98	
PR US 20/HARRISON	1314+80.00	1315+80.00	0.025	1	69	
PR US 20/HARRISON	1314+80.00	1315+80.00	0.025	1	68	
PR US 20/HARRISON	1314+80.00	1315+80.00	0.025	1	50	
PR US 20/HARRISON	1314+80.00	1315+80.00	0.025	1	180	
PR US 20/HARRISON	1314+80.00	1315+80.00	0.025	1	15	
PR US 20/HARRISON	1314+80.00	1315+80.00	0.025	1	2	
PR US 20/HARRISON	1314+80.00	1315+80.00	0.025	1	6	
PR US20/HARRISON	1315+80.00	1316+91.82	0.025	1	68	
PR US20/HARRISON	1315+80.00	1317+99.47	0.025	1	104	
PR US20/HARRISON	1315+80.00	1322+80.00	0.025	1	74	
PR US20/HARRISON	1315+80.00	1322+80.00	0.025	1	75	
PR US20/HARRISON	1315+80.00	1322+80.00	0.025	1	817	
PR US20/HARRISON	1315+80.00	1322+80.00	0.025	1	572	
PR US 20/HARRISON	1322+80.00	1332+19.28	0.025	1	846	
PR US 20/HARRISON	1322+80.00	1338+32.34	0.025	1	159	
PR US 20/HARRISON	1322+80.00	1332+19.28	0.025	1	145	
PR US 20/HARRISON	1322+80.00	1337+00.00	0.025	1	1,278	
PR US 20/HARRISON	1322+80.00	1337+00.00	0.025	1	145	
PR US20/HARRISON	1332+19.28	1333+80.00	0.025	1	182	
PR US20/HARRISON	1332+19.28	1333+80.00	0.025	1	13	
PR US 20/HARRISON	1333+80.00	1334+19.28	0.025	1	59	
PR US 20/HARRISON	1334+19.28	1337+00.00	0.025	1	422	
PR US 20/HARRISON	1333+80.00	1337+00.00	0.025	1	49	
PR US20/HARRISON	1337+00.00	1337+26.30	0.025	1	3	
PR HARRISON	126+24.86	127+08.44	0.025	1	163	
PR HARRISON	127+08.44	134+75.00	0.025	1	690	
PR HARRISON	127+08.44	131+12.70	0.025	1	61	
PR HARRISON	127+08.44	127+46.70	0.025	1	35	
PR HARRISON	127+46.70	131+12.70	0.025	1	440	
PR HARRISON	127+46.70	144+75.00	0.025	1	177	
PR HARRISON	128+28.00	144+75.00	0.025	1	168	
PR HARRISON	131+12.70	133+32.70	0.025	1	34	
PR HARRISON	131+12.70	133+32.70	0.025	1	234	
PR HARRISON	133+32.70	144+19.23	0.025	1	168	
PR HARRISON	133+32.70	134+75.00	0.025	1	171	
PR HARRISON	134+75.00	141+00.00	0.025	1	563	
PR HARRISON	134+75.00	137+39.12	0.025	1	238	
PR HARRISON	137+39.12	140+75.00	0.025	1	334	
PR HARRISON	140+75.00	141+00.00	0.025	1	28	
PR HARRISON	142+75.00	144+48.18	0.025	1	156	
PR HARRISON	142+75.00	143+69.12	0.025	1	116	
PR HARRISON	144+48.18	144+75.00	0.025	1	25	
PR HARRISON	144+19.23	144+75.00	0.025	1	9	
PR HARRISON	143+69.12	144+75.00	0.025	1	133	
PR HARRISON	144+75.00	145+75.00	0.025	1	16	
PR HARRISON	145+75.00	150+25.00	0.025	1	359	
PR HARRISON	145+75.00	150+25.00	0.025	1	252	
PR HARRISON	145+75.00	150+25.00	0.025	1	3	
PR HARRISON	145+75.00	150+25.00	0.025	1	2	
PR HARRISON	145+75.00	150+25.00	0.025	1	29	

40600290
BITUMINOUS MATERIALS (TACK COAT)
80% FED / 20% STATE

ROAD	STA	STA	LB/SF	APPLICATIONS	TOTAL (LBS)	REMARKS
PR HARRISON	145+75.00	150+25.00	0.025	1	32	
PR HARRISON	145+75.00	150+25.00	0.025	1	24	
PR HARRISON	145+75.00	150+25.00	0.025	1	47	
PR HARRISON	145+75.00	150+25.00	0.025	1	40	
PR HARRISON	145+75.00	150+25.00	0.025	1	448	
PR HARRISON	145+75.00	150+25.00	0.025	1	31	
PR HARRISON	145+75.00	150+25.00	0.025	1	185	
PR HARRISON	145+75.00	150+25.00	0.025	1	1	
PR HARRISON	145+75.00	150+25.00	0.025	1	2	
PR HARRISON	145+75.00	150+25.00	0.025	1	32	
PR HARRISON	145+75.00	150+25.00	0.025	1	12	
PR HARRISON	150+25.00	152+52.04	0.025	1	231	
PR HARRISON	150+25.00	153+08.66	0.025	1	29	
PR HARRISON	150+25.00	153+08.66	0.025	1	125	
PR HARRISON	152+52.04	153+08.66	0.025	1	34	
PR EB DDI	3003+75.00	3004+76.14	0.025	1	52	
PR EB DDI	3003+75.00	3004+76.14	0.025	1	97	
PR EB DDI	3003+75.00	3004+76.14	0.025	1	11	
PR WB DDI	2019+52.06	2020+52.60	0.025	1	126	
PR WB DDI	2019+52.06	2020+52.60	0.025	1	11	
PR EB DDI	3000+00.00	3001+75.00	0.025	1	158	
PR WB DDI	2022+52.72	2024+27.72	0.025	1	202	
PR RAMP A	100+00.00	102+84.63	0.025	1	317	
PR RAMP A	102+84.63	106+00.00	0.025	1	160	
PR RAMP A	106+00.00	110+77.23	0.025	1	191	
PR RAMP A	102+84.63	110+77.23	0.025	1	30	
PR RAMP A	102+84.63	102+85.98	0.025	1	1	
PR RAMP A	102+85.98	107+65.06	0.025	1	18	
PR RAMP B	217+13.88	221+91.57	0.025	1	287	
PR RAMP B	221+91.57	224+70.38	0.025	1	211	
PR RAMP B	224+70.38	225+74.38	0.025	1	94	
PR RAMP B	217+13.88	225+74.38	0.025	1	33	
PR RAMP B	217+13.88	225+74.38	0.025	1	33	
PR RAMP B	225+74.38	227+92.42	0.025	1	340	
PR RAMP C	304+04.26	312+45.76	0.025	1	337	
PR RAMP C	312+45.76	314+69.76	0.025	1	110	
PR RAMP C	314+69.76	317+29.54	0.025	1	156	
PR RAMP C	304+04.26	317+29.54	0.025	1	50	
PR RAMP C	306+69.02	317+29.54	0.025	1	40	
PR RAMP C	317+29.54	318+95.32	0.025	1	185	
PR RAMP D	400+00.00	402+33.25	0.025	1	299	
PR RAMP D	402+33.25	406+84.15	0.025	1	226	
PR RAMP D	406+84.15	412+00.00	0.025	1	207	
PR RAMP D	402+33.25	412+00.00	0.025	1	37	
PR RAMP D	402+33.25	409+86.82	0.025	1	29	
PR NB I-39	10+00.00	13+49.41	0.025	1	75	
PR NB I-39	10+00.00	22+00.00	0.025	1	45	
PR NB I-39	13+49.41	15+13.70	0.025	1	7	
PR NB I-39	15+13.70	17+52.45	0.025	1	9	
PR NB I-39	17+52.45	22+00.00	0.025	1	17	
PR SB I-39	1306+33.75	1311+28.05	0.025	1	19	
PR SB I-39	1311+28.05	1319+95.00	0.025	1	33	
PR SB I-39	1308+52.91	1311+17.51	0.025	1	89	
PR SB I-39	1306+33.75	1308+52.91	0.025	1	9	
RAMP C	300+95.01	304+04.26	0.025	1	12	
RAMP C	300+00.00	300+95.01	0.025	1	4	
PR I-39 SB	1315+22.06	1319+95.00	0.025	1	18	
PR NB I-39	10+00.00	13+49.41	0.025	1	210	
PR NB I-39	13+49.41	17+52.45	0.025	1	411	
PR NB I-39	17+52.45	22+00.00	0.025	1	402	
PR SB I-39	1306+33.75	1311+17.51	0.025	1	435	
PR SB I-39	1311+17.51	1319+95.00	0.025	1	908	
PR I-39	2745+97.20	2747+00.00	0.025	2	65	
PR I-39	22+00.00	24+02.63	0.025	2	111	
PR US20/HARRISON	123+50.00	124+06.36	0.025	2	17	
PR US20/HARRISON	123+50.00	124+47.56	0.025	2	28	
PR HARRISON	123+50.00	125+69.46	0.025	1	264	
PR HARRISON	123+50.00	124+47.56	0.025	1	4	

40600290
BITUMINOUS MATERIALS (TACK COAT)
80% FED / 20% STATE

ROAD	STA	STA	LB/SF	APPLICATIONS	TOTAL (LBS)	REMARKS
PR HARRISON	124+47.56	124+82.34	0.025	1	4	
PR HARRISON	123+50.00	125+69.46	0.025	1	33	
PR HARRISON	123+50.00	125+69.46	0.025	1	132	
PR HARRISON	123+50.00	124+06.35	0.025	1	3	
PR HARRISON	124+06.35	124+39.78	0.025	1	4	
PR HARRISON	125+69.46	126+24.86	0.025	1	109	
PR SUP WEST	394+25.91	404+10.98	0.025	1	241	
PR SUP	500+00.00	508+54.41	0.025	1	215	
PR SUP	510+26.97	518+08.52	0.025	1	98	
PR SUP	520+08.45	539+99.21	0.025	1	497	
SOUTH MALL DR	297+42.72	298+49.09	0.05	1	709	
SOUTH MALL DR	298+49.09	299+55.43	0.025	4	1,047	
SOUTH MALL DR	300+33.46	303+37.00	0.025	4	2,527	
		SUBTOTAL			25,307	
		GRAND TOTAL			25,544	

40701951
HOT-MIX ASPHALT PAVEMENT (FULL-DEPTH), 13 1/2"
80% FED / 20% STATE

ROAD	STA	STA	SQ YD	REMARKS
SOUTH MALL DR	298+49.09	299+55.43	1163.90	
SOUTH MALL DR	300+33.46	303+37.00	2808	
		SUBTOTAL	3,972	
		GRAND TOTAL	3,972	

NOTE AREAS MEASURED IN CADD

42100350
CONTINUOUSLY REINFORCED PORTLAND CEMEMNT CONCRETE PAVEMENT 12 1/2"
80% FED / 20% STATE

ROAD	STA	STA	WIDTH	DESCRIPTION	SQ YD	REMARKS
PR NB I-39	10+00.00	13+49.41	24'	NB LANES	932	
PR NB I-39	13+49.41	17+52.45	VAR	NB LANES	1,823	
PR NB I-39	17+52.45	22+00.00	36'	NB LANES	1,784	
PR SB I-39	1306+33.75	1311+17.51	36'	SB LANES	1,933	
PR SB I-39	1311+17.51	1319+95.00	36'-58.3'	SB LANES	4,033	
				SUBTOTAL	10,505	
				GRAND TOTAL	10,505	

NOTE: AREAS FOR VARYING WIDTHS MEASURED IN CADD

42100615
PAVEMENT REINFORCEMENT
80% FED / 20% STATE

ROAD	STA	STA	WIDTH	DESCRIPTION	SQ YD	REMARKS
PR NB I-39	10+00.00	13+49.41	24	NB LANES	932	
PR NB I-39	13+49.41	17+52.45	VAR	NB LANES	1,823	
PR NB I-39	17+52.45	22+00.00	36	NB LANES	1,784	
PR SB I-39	1306+33.75	1311+17.51	36	SB LANES	1,933	
PR SB I-39	1311+17.51	1319+95.00	36-58.3	SB LANES	4,033	
				SUBTOTAL	10,505	
				GRAND TOTAL	10,505	

NOTE: AREAS FOR VARYING WIDTHS MEASURED IN CADD

42101436
LUG SYSTEM COMPLETE 36'
80% FED / 20% STATE

ROAD	STA	STA	EACH	REMARKS
PR I-39 SB	1380+40.63	1318+94.95	1	
PR I-39 NB	20+45.07	20+99.33	1	
		SUBTOTAL	2	
		GRAND TOTAL	2	

42300300
PORTLAND CEMENT CONCRETE DRIVEWAY PAVEMENT, 7 INCH
80% FED / 20% STATE

ROAD	STA	STA	SQ YD	REMARKS
PR HARRISON	134+55.00	135+01.68	48	
		SUBTOTAL	48	
		GRAND TOTAL	48	

NOTE: AREA MEASURED IN CADD.

42000506
PORTLAND CEMENT CONCRETE PAVEMENT 10 1/4" (JOINTED)
80% FED / 20% STATE

ROAD	STA	STA	WIDTH	DESCRIPTION	SQ YD	REMARKS
PR HARRISON	123+50.00	125+69.46	48	EB	1,158	
PR HARRISON	123+50.00	125+69.46	24	WB	592	
PR HARRISON	125+69.46	126+24.86	78	EB & WB	477	
PR HARRISON	126+24.86	127+08.44	78	EB & WB	723	
PR HARRISON	127+08.44	141+00.00	36	EB	5,531	
PR HARRISON	126+24.86	127+46.70	36	WB	154	
PR HARRISON	127+46.70	131+12.70	48	WB	1,973	
PR HARRISON	131+12.70	133+32.89	VAR 36-48	WB	1,040	
PR HARRISON	133+32.89	137+39.12	36	WB	1,625	
PR HARRISON	137+39.12	141+00.00	VAR 36-44	WB	1,604	
PR DDI EB	3000+00.00	3003+48.18	36	EB	1,393	
PR DDI EB	3003+48.18	3004+33.69	VAR 36-38	EB	336	
PR DDI EB	3004+33.69	3006+03.56	38	EB	746	
PR DDI EB	3006+03.56	3006+54.39	VAR 38-52	EB	235	
PR DDI EB	3006+54.39	3012+17.39	26	EB	1,356	
PR DDI WB	2012+02.80	2017+16.15	38	WB	270	
PR DDI WB	2017+62.31	2018+77.60	VAR 50-70	WB	739	
PR DDI WB	2018+77.60	2021+58.89	50	WB	1,575	
PR DDI WB	2021+58.89	2024+27.72	VAR 44-50	WB	1,406	
PR DDI EB	3012+17.39	3017+23.78	26	EB	1,151	
PR DDI EB	3017+52.89	3019+10.96	26	EB	421	
PR DDI EB	3019+10.96	3021+93.74	VAR 48-36	EB	1,275	
PR DDI EB	3021+93.74	3024+12.91	36	EB	877	
PR DDI WB	2000+00.00	2000+19.17	36	WB	77	
PR DDI WB	2000+19.17	2002+68.30	VAR 36-50	WB	1,227	
PR DDI WB	2002+68.30	2005+50.39	50	WB	1,594	
PR DDI WB	2005+50.39	2005+99.69	VAR 50-60	WB	293	
PR DDI WB	2005+99.69	2012+02.80	38	WB	2,260	
PR DDI EB	1323+00.00	1332+19.28	36	EB	3,677	
PR DDI EB	1332+19.28	1334+19.28	VAR 36-60	EB	1,067	
PR DDI EB	1334+19.28	1337+00.00	60	EB	1,871	
PR DDI WB	1323+00.00	1337+00.00	36	WB	5,600	
PR RAMP A	100+00.00	102+84.63	VARIES	NEAR ISLAND	1,407	
PR RAMP A	102+84.63	106+00.00	VAR 24-16	RAMP	709	
PR RAMP A	106+00.00	110+77.23	16	RAMP	851	
PR RAMP B	217+13.88	221+91.57	24	RAMP	1,261	
PR RAMP B	221+91.57	224+70.38	VAR 24-36	RAMP	934	
PR RAMP B	224+70.38	225+74.38	36	RAMP	416	
PR RAMP B	225+74.38	227+92.42	VARIES	NEAR ISLAND	1,510	
PR RAMP C	304+04.26	312+45.76	16	RAMP	1,505	
PR RAMP C	312+45.76	314+69.76	VAR 16-24	RAMP	487	
PR RAMP C	314+69.76	317+29.54	24	RAMP	680	
PR RAMP C	317+29.54	318+95.32	VARIES	NEAR ISLAND	822	
PR RAMP D	400+00.00	402+33.25	VARIES	NEAR ISLAND	1,329	
PR RAMP D	402+33.25	406+84.15	VAR 24-16	RAMP	1,003	
PR RAMP D	406+84.15	412+00.00	16	RAMP	924	
				SUBTOTAL	58,161	
				GRAND TOTAL	58,161	

NOTE: AREAS WITH VARYING WIDTHS MEASURED IN CADD

42001300
PROTECTIVE COAT
80% FED / 20% STATE

ROAD	STA	STA	WIDTH	DESCRIPTION	SQ YD	REMARKS
PR HARRISON	123+50.00	125+69.46	48	EB PAVT	1,158	
PR HARRISON	123+50.00	125+69.46	24	WB PAVT	592	
PR HARRISON	125+69.46	126+24.86	78	EB & WB PAVT	477	
PR HARRISON	116+37.72	125+62.47	VARIES	MEDIAN	461	
HARRISON AVE	123+73.14	124+72.16	VARIES	OUTLET	39	
HARRISON AVE	123+76.49	124+29.95	VARIES	OUTLET	23	
HARRISON AVE	116+37.72	119+82.16	2.58	B-6.24 C&G	99	
HARRISON AVE	118+98.78	125+59.03	2.58	B-6.24 C&G	190	
HARRISON AVE	124+29.95	124+39.78	2.58	B-6.24 C&G	3	
HARRISON AVE	124+72.16	124+82.34	2.58	B-6.24 C&G	3	
PR HARRISON	116+37.72	118+98.78	1.08	B-6.06 C&G	31	
PR HARRISON	119+82.16	125+69.46	1.08	B-6.06 C&G	72	
PR HARRISON	126+24.86	127+08.44	78	EB & WB PAVT	723	
PR HARRISON	127+08.44	141+00.00	36	EB PAVT	5,531	
PR HARRISON	127+08.44	127+46.70	36	WB PAVT	154	
PR HARRISON	127+46.70	131+12.70	48	WB PAVT	1,973	
PR HARRISON	131+12.70	133+32.89	VAR 36-48	WB PAVT	1,040	
PR HARRISON	133+32.89	137+39.12	36	WB PAVT	1,625	
PR HARRISON	137+39.12	141+00.00	VAR 36-44	WB PAVT	1,604	
PR DDI EB	3000+00.00	3003+48.18	36	EB PAVT	1,393	
PR DDI EB	3003+48.18	3004+33.69	VAR 36-38	EB PAVT	336	
PR DDI EB	3004+33.69	3006+03.56	38	EB PAVT	746	
PR DDI EB	3006+03.56	3006+54.39	VAR 38-52	EB PAVT	235	
PR DDI EB	3006+54.39	3012+17.39	26	EB PAVT	1,356	

42001300
PROTECTIVE COAT
80% FED / 20% STATE

ROAD	STA	STA	WIDTH	DESCRIPTION	SQ YD	REMARKS
PR DDI WB	2012+02.80	2017+16.15	38	WB PAVT	270	
PR DDI WB	2017+62.31	2018+77.60	VAR 50-70	WB PAVT	739	
PR DDI WB	2018+77.60	2021+58.89	50	WB PAVT	1,575	
PR DDI WB	2021+58.89	2024+27.72	VAR 44-50	WB PAVT	1,406	
PR US 20/HARRISON	1314+86.00	1316+79.00	VARIES	RAMP A ISLAND	741	
PR HARRISON	127+14.95	147+39.95	VARIES	MEDIAN	2,975	
PR HARRISON	147+66.12	149+09.58	VARIES	RAMP D ISLAND	581	
PR HARRISON	148+89.19	151+86.03	VARIES	MEDIAN	827	
HARRISON AVE	125+62.47	125+68.46	VARIES	RAMPED NOSE	5	
HARRISON AVE	127+08.94	127+14.95	VARIES	RAMPED NOSE	4	
PR HARRISON	134+55.00	135+01.68	VARIES	DRIVEWAY	48	
HARRISON AVE	127+10.69	141+00.00	2.58	B-6.24 C&G	398	
HARRISON AVE	132+77.71	141+00.00	2.58	B-6.24 C&G	236	
DDI EB	3000+00.00	3006+47.17	2.58	B-6.24 C&G	186	
DDI WB	2017+80.14	2024+27.72	2.58	B-6.24 C&G	186	
HARRISON AVE	128+28.01	141+00.00	2.58	B-6.24 C&G	361	
DDI EB	3000+00.00	3006+82.10	2.58	B-6.24 C&G	224	
HARRISON AVE	127+46.70	141+00.00	2.58	B-6.24 C&G	393	
DDI WB	2017+00.00	2024+27.72	2.58	B-6.24 C&G	224	
DDI EB	3007+34.25	3008+17.77	2.58	B-6.24 C&G	114	
DDI WB	2016+08.42	2017+13.92	2.58	B-6.24 C&G	107	
DDI EB	3008+35.98	3008+93.66	2.58	B-6.24 C&G	32	
DDI EB	3007+86.09	3010+47.50	2.58	B-6.24 C&G	72	
DDI WB	2012+02.80	2016+21.62	2.58	B-6.24 C&G	150	
DDI WB	2013+37.50	2016+43.13	2.58	B-6.24 C&G	72	
PR HARRISON	127+08.44	132+77.71	1.08	B-6.06 C&G	69	
PR DDI EB	3012+17.39	3017+23.78	26	EB PAVT	1,151	
PR DDI EB	3017+52.89	3019+10.96	26	EB PAVT	421	
PR DDI EB	3019+10.96	3021+93.74	VAR 48-36	EB PAVT	1,275	
PR DDI EB	3021+93.74	3024+12.91	36	EB PAVT	877	
PR DDI WB	2000+00.00	2000+19.17	36	WB PAVT	77	
PR DDI WB	2000+19.17	2002+68.30	VAR 36-50	WB PAVT	1,227	
PR DDI WB	2002+68.30	2005+50.39	50	WB PAVT	1,594	
PR DDI WB	2005+50.39	2005+99.69	VAR 50-60	WB PAVT	293	
PR DDI WB	2005+99.69	2012+02.80	38	WB PAVT	2,260	
PR DDI EB	1323+00.00	1332+19.28	36	EB PAVT	3,677	
PR DDI EB	1332+19.28	1334+19.28	VAR 36-60	EB PAVT	1,067	
PR DDI EB	1334+19.28	1337+00.00	60	EB PAVT	1,871	
PR DDI WB	1323+00.00	1337+00.00	36	WB PAVT	5,600	
PR HARRISON	147+34.00	149+09.00	VARIES	RAMP C ISLAND	427	
PR US 20/HARRISON	1312+57.78	1315+53.84	VARIES	MEDIAN	869	
PR US 20/HARRISON	1315+31.39	1317+96.53	VARIES	RAMP B ISLAND	1,082	
PR US 20/HARRISON	1317+03.56	1337+00.00	VARIES	MEDIAN	3,013	
HARRISON AVE	1337+00.00	1337+61.33	VARIES	OUTLET	3,013	
DDI EB	3014+86.40	3015+91.22	2.58	B-6.24 C&G	70	
DDI EB	3012+17.39	3016+69.72	2.58	B-6.24 C&G	81	
DDI WB	2008+09.67	2012+02.80	2.58	B-6.24 C&G	133	
DDI WB	2007+40.99	2010+39.00	2.58	B-6.24 C&G	81	
DDI EB	3015+89.50	3017+21.57	2.58	B-6.24 C&G	140	
DDI WB	2007+78.59	2006+70.69	2.58	B-6.24 C&G	175	
DDI EB	3018+09.52	3024+12.91	2.58	B-6.24 C&G	175	
DDI EB	3017+38.36	3024+12.91	2.58	B-6.24 C&G	215	
DDI WB	2000+00.00	2006+75.00	2.58	B-6.24 C&G	214	
DDI WB	2000+00.00	2006+03.61	2.58	B-6.24 C&G	173	
HARRISON AVE	1323+00.00	1338+31.32	2.58	B-6.24 C&G	441	
HARRISON AVE	1323+00.00	1333+19.23	2.58	B-6.24 C&G	293	
HARRISON AVE	1323+00.00	1337+00.00	2.58	B-6.24 C&G	403	
HARRISON AVE	1323+00.00	1337+00.00	2.58	B-6.24 C&G	402	
PR US 20/HARRISON	1333+19.22	1337+00.00	1.08	B-6.06 C&G	46	
PR RAMP A	100+00.00	102+84.63	VARIES	NEAR ISLAND	1,407	
PR RAMP A	101+41.46	102+16.97	VAR	RT SHOULDER	52	
PR RAMP A	102+16.97	110+77.23	6	RT SHOULDER	572	
PR RAMP A	102+39.51	102+86.03	VAR	LT SHOULDER	24	
PR RAMP A	102+84.63	106+00.00	VAR 24-16	RAMP PAVT	709	
PR RAMP A	102+86.03	107+65.06	4	LT SHOULDER	218	
PR RAMP A	106+00.00	110+77.23	16	RAMP PAVT	851	
PR RAMP A	110+77.23	112+40.54	6	RT SHOULDER	109	
PR RAMP A	112+40.54	114+76.79	VAR 6-12	RT SHOULDER	225	
PR RAMP B	217+13.88	221+91.57	24	RAMP PAVT	1,261	

42001300
PROTECTIVE COAT
80% FED / 20% STATE

ROAD	STA	STA	WIDTH	DESCRIPTION	SQ YD	REMARKS
PR RAMP B	221+91.57	224+70.38	VAR 24-36	RAMP PAVT	934	
PR RAMP B	224+70.38	225+74.38	36	RAMP PAVT	416	
PR RAMP B	225+74.38	227+92.42	VARIES	NEAR ISLAND	1,510	
PR RAMP B	217+13.88	225+76.13	10	RT SHOULDER	966	
PR RAMP B	225+76.13	226+34.26	VAR	RT SHOULDER	59	
PR RAMP B	217+13.88	225+74.66	6	LT SHOULDER	565	
PR RAMP B	225+74.66	226+00.38	VAR	LT SHOULDER	19	
PR RAMP C	300+00.00	300+95.01	VAR 6-12	RT SHOULDER	91	
PR RAMP C	300+95.01	304+04.26	6	RT SHOULDER	207	
PR RAMP C	304+04.26	312+45.76	16	RAMP PAVT	1,505	
PR RAMP C	312+45.76	314+69.76	VAR 16-24	RAMP PAVT	487	
PR RAMP C	314+69.76	317+29.54	24	RAMP PAVT	680	
PR RAMP C	317+29.54	318+95.32	VARIES	NEAR ISLAND	822	
PR RAMP C	304+04.26	317+29.54	6	RT SHOULDER	883	
PR RAMP C	317+29.54	317+65.79	VAR	RT SHOULDER	26	
PR RAMP C	306+69.02	317+30.79	4	LT SHOULDER	473	
PR RAMP C	317+30.79	317+46.98	VAR	LT SHOULDER	9	
PR RAMP D	400+00.00	402+33.25	VARIES	NEAR ISLAND	1,329	
PR RAMP D	402+33.25	406+84.15	VAR 24-16	RAMP PAVT	1,003	
PR RAMP D	406+84.15	412+00.00	16	RAMP PAVT	924	
PR RAMP D	401+54.07	402+17.35	VAR	RT SHOULDER	43	
PR RAMP D	402+17.35	412+00.00	6	RT SHOULDER	654	
PR RAMP D	401+90.75	402+21.07	VAR	LT SHOULDER	14	
PR RAMP D	402+21.07	409+86.82	4	LT SHOULDER	343	
PR NB I-39	10+00.00	13+49.41	24	NB PAVT	932	
PR NB I-39	13+49.41	17+52.45	VAR	NB PAVT	1,823	
PR NB I-39	17+52.45	22+00.00	36	NB PAVT	1,784	
PR SB I-39	1306+33.75	1311+17.51	36	SB PAVT	1,933	
PR SB I-39	1311+17.51	1319+95.00	36'-58.3'	SB PAVT	4,033	
PR NB I-39	17+52.45	22+00.00	12	RT SHOULDER	593	
PR NB I-39	10+00.00	22+00.00	12	LT SHOULDER	1,600	
PR NB I-39	10+00.00	13+49.24	VAR	GORE & SHOULDER	329	
PR SB I-39	1306+33.75	1311+28.05	VAR	LT SHOULDER	760	
PR SB I-39	1311+28.05	1319+95.00	12.00	LT SHOULDER	1,156	
PR SB I-39	1308+52.91	1311+17.51	VAR	GORE	391	
PR SB I-39	1306+33.75	1308+52.91	12	RT SHOULDER	292	
PR SB I-39	1315+22.06	1319+95.00	12	RT SHOULDER	631	
PR NB I-39	14+52.63	16+47.59	8.9166667	BAR WALL	194	
PR NB I-39	10+00.00	14+52.63	10.416667	BAR WALL	525	
PR SMALL	299+37.54	298+98.50	VARIES	SIDEWALK	61	
PR SMALL	300+60.24	300+79.62	VARIES	SIDEWALK	38	
PR SUP	508+48.32	508+54.41	VARIES	SIDEWALK	8	
PR SUP	508+79.58	509+89.56	VARIES	SIDEWALK	122	
PR SUP	510+26.73	510+32.97	VARIES	SIDEWALK	8	
PR SUP	518+02.39	518+08.59	VARIES	SIDEWALK	8	
PR SUP	518+39.69	519+83.28	VARIES	SIDEWALK	160	
PR SUP	520+08.45	520+14.54	VARIES	SIDEWALK	8	
				SUBTOTAL	101,474	
				GRAND TOTAL	101,474	

42400200
PORTLAND CEMENT CONCRETE SIDEWALK 5 INCH
80% FED / 20% STATE

ROAD	STA	STA	SQ FT	REMARKS
PR SMALL	299+37.54	298+98.50	546	
PR SMALL	300+60.24	300+79.62	345	
PR SUP	508+48.32	508+54.41	68	
PR SUP	508+79.58	509+89.56	1,101	
PR SUP	510+26.73	510+32.97	69	
PR SUP	518+02.39	518+08.59	68	
PR SUP	518+39.69	519+83.28	1,437	
PR SUP	520+08.45	520+14.54	68	
		SUBTOTAL	3,702	
		GRAND TOTAL	3,702	

42400800
DETECTABLE WARNINGS
80% FED / 20% STATE

ROAD	STA	WIDTH	LENGTH	SQ FT	REMARKS
PR SUP	508+52.32	10	2	20	
PR SUP	508+81.58	10	2	20	
PR SUP	509+87.56	10	2	20	
PR SUP	510+28.97	10	2	20	
PR SUP	518+06.39	10	2	20	
PR SUP	518+41.69	10	2	20	
PR SUP	519+81.28	10	2	20	
PR SUP	520+10.54	10	2	20	
S MALL	299+32.24	10	2	20	
S MALL	300+64.43	10	2	20	
			SUBTOTAL	200	
			GRAND TOTAL	200	

48203021
HOT-MIX ASPHALT SHOULDERS, 6"
100% TOLLWAY

ROAD	STA	STA	WIDTH	LOCATION	SQ YD	REMARKS
PR I-39	2747+00.00	2751+53.11	VAR	LT SHLD	525	
				SUBTOTAL	525	

80% FED / 20% STATE

ROAD	STA	STA	WIDTH	LOCATION	SQ YD	REMARKS
PR I-39 NB	22+00.00	24+02.52	VAR	LT SHLD	246	
PR I-39	2745+97.20	2747+00.00	VAR	LT SHLD	138	
				SUBTOTAL	384	
				GRAND TOTAL	909	

48203029
HOT-MIX ASPHALT SHOULDERS, 8"
80% FED / 20% STATE

ROAD	STA	STA	WIDTH	LOCATION	SQ YD	REMARKS
PR HARRISON	123+50.00	124+47.35	6 & VAR	RT SHOULDER	62	
PR HARRISON	123+50.00	124+06.36	6 & VAR	LT SHOULDER	37	
				SUBTOTAL	99	
				GRAND TOTAL	99	

NOTE: AREAS WITH VARYING WIDTHS MEASURED IN CADD

48300505
PORTLAND CEMENT CONCRETE SHOULDERS, 10 1/4"
80% FED / 20% STATE

ROAD	STA	STA	WIDTH	LOCATION	SQ YD	REMARKS
PR RAMP A	101+41.46	102+16.97	VAR	RT SHOULDER	52	
PR RAMP A	102+16.97	110+77.23	00+06.00	RT SHOULDER	572	
PR RAMP A	102+39.51	102+86.03	VAR	LT SHOULDER	24	
PR RAMP A	102+86.03	107+65.06	00+04.00	LT SHOULDER	218	
PR RAMP B	217+13.88	225+76.13	00+10.00	RT SHOULDER	966	
PR RAMP B	225+76.13	226+34.26	VAR	RT SHOULDER	59	
PR RAMP B	217+13.88	225+74.66	00+06.00	LT SHOULDER	565	
PR RAMP B	225+74.66	226+00.38	VAR	LT SHOULDER	19	
PR RAMP C	304+04.26	317+29.54	00+06.00	RT SHOULDER	883	
PR RAMP C	317+29.54	317+65.79	VAR	RT SHOULDER	26	
PR RAMP C	306+69.02	317+30.79	00+04.00	LT SHOULDER	473	
PR RAMP C	317+30.79	317+46.98	VAR	LT SHOULDER	9	
PR RAMP D	401+54.07	402+17.35	VAR	RT SHOULDER	43	
PR RAMP D	402+17.35	412+00.00	00+10.00	RT SHOULDER	654	
PR RAMP D	401+90.75	402+21.07	VAR	LT SHOULDER	14	
PR RAMP D	402+21.07	409+86.82	00+04.00	LT SHOULDER	343	
				SUBTOTAL	4,920	
				GRAND TOTAL	4,920	

48300710
PORTLAND CEMENT CONCRETE SHOULDERS, 12 1/2"
80% FED / 20% STATE

ROAD	STA	STA	WIDTH	LOCATION	SQ YD	REMARKS
PR RAMP A	110+77.23	112+40.54	6	RT SHOULDER	109	
PR RAMP A	112+40.54	114+76.79	VAR 6-12	RT SHOULDER	225	
PR NB I-39	17+52.45	22+00.00	12	RT SHOULDER	593	
PR NB I-39	10+00.00	22+00.00	12	LT SHOULDER	1,600	
PR NB I-39	10+00.00	13+49.24	VAR	GORE & SHOULDER	329	
PR SB I-39	1306+33.75	1311+28.05	VAR	LT SHOULDER	760	
PR SB I-39	1311+28.05	1319+95.00	12	LT SHOULDER	1,156	
PR SB I-39	1308+52.91	1311+17.51	VAR	GORE	392	
PR SB I-39	1306+33.75	1308+52.91	12	RT SHOULDER	293	
RAMP C	300+95.01	304+04.26	6	RT SHOULDER	207	
RAMP C	300+00.00	300+95.01	VAR 6-12	RT SHOULDER	91	
PR I-39 SB	1315+22.06	1319+95.00	12	RT SHOULDER	631	
				SUBTOTAL	6,386	
				GRAND TOTAL	6,386	

64200116
SHOULDER RUMBLE STRIPS, 16 INCH
80% FED / 20% STATE

ROAD	STA	STA	OFFSET	FOOT	REMARKS
PR RAMP A	102+39.51	107+65.14	LT	526	
PR RAMP A	102+16.97	107+65.14	RT	549	
PR RAMP B	219+08.06	225+75.54	LT	668	
PR RAMP B	219+08.31	225+75.54	RT	668	
PR RAMP C	304+04.26	317+30.79	LT	1,327	
PR RAMP C	306+69.02	317+30.79	RT	1,062	
PR RAMP D	402+21.00	409+86.82	LT	766	
PR RAMP D	402+17.35	412+00.00	RL	983	
			SUBTOTAL	6,549	
			GRAND TOTAL	6,549	

Z0073345
SLEEPER SLAB
80% FED / 20% STATE

ROAD	STA	STA	FOOT	REMARKS
PR DDI WB	2006+03.66	2006+68.62	65	
PR DDI WB	2006+77.56	2007+40.99	62	
PR DDI WB	2017+16.15	2017+80.14	64	
PR DDI WB	2016+43.12	2017+07.21	63	
PR DDI EB	3008+25.00	3009+12.56	90	
		SUBTOTAL	344	
		GRAND TOTAL	344	

X3030113
AGGREGATE SUBGRADE IMPROVEMENT 12" (SPECIAL)
100% TOLLWAY

ROAD	STA	STA	WIDTH	DESCRIPTION	SQ YD	REMARKS
PR I-39	2745+97.20	2748+92.07	VAR	LT SHLD	550	
				SUBTOTAL	550	
				GRAND TOTAL	550	

NOTE: AREAS CALCULATED FROM SHOULDER AREAS AND ADDING 0.5' EXTENSION

48100500
AGGREGATE SHOULDERS, TYPE A 6"
80% FED / 20% STATE

ROAD	STA	STA	WIDTH	DESCRIPTION	SQ YD	REMARKS
PR RAMP A	102+16.97	110+77.23	2	RT SHOULDER	192	
PR RAMP A	102+85.98	107+65.21	2	LT SHOULDER	107	
PR NB I-39	10+00.00	10+34.71	2	RT SHOULDER	8	
PR NB I-39	14+52.49	16+89.52	2	LT SHOULDER	53	
PR NB I-39	17+51.58	22+00.00	2	LT SHOULDER	100	
PR NB I-39	13+49.72	22+00.00	2	RT SHOULDER	228	
PR RAMP B	217+13.88	225+74.66	2	LT SHOULDER	192	
PR RAMP B	217+13.88	225+76.13	2	RT SHOULDER	192	
PR RAMP C	304+04.26	317+29.54	2	RT SHOULDER	295	
PR RAMP C	306+69.02	317+30.79	2	LT SHOULDER	236	
PR SB I-39	1306+33.75	1308+52.91	2	RT SHOULDER	49	
PR SB I-39	1310+48.41	1311+17.51	2	LT SHOULDER	110	
PR RAMP D	402+17.35	412+00.00	2	RT SHOULDER	219	
PR RAMP D	402+21.07	409+86.82	2	LT SHOULDER	171	
PR I-39 SB	1311+28.05	1319+95.00	2	LT SHOULDER	193	
PR I-39 SB	1311+18.67	1319+95.00	2	RT SHOULDER	195	
PR I-39 SB	2745+97.20	2747+00.00	2	LT SHOULDER	23	
PR I-39 NB	22+00.00	24+02.63	2	LT SHOULDER	45	
				SUBTOTAL	2,608	
				GRAND TOTAL	2,608	

48101498
AGGREGATE SHOULDERS, TYPE B 4"
100% TOLLWAY

ROAD	STA	STA	WIDTH	DESCRIPTION	SQ YD	REMARKS
PR I-39	2747+00.00	2751+53.11	2	LT SHOULDER	152	
				SUBTOTAL	152	
				GRAND TOTAL	152	

Z0028415						
GEOTECHNICAL REINFORCEMENT						
80% FED / 20% STATE						
ROAD	STA	STA	WIDTH	DESCRIPTION	SQ YD	REMARKS
PR US20/HARRISON	1311+13.21	1313+25.26	38.00	WB LANES	640	
PR US20/HARRISON	1311+13.21	1314+80.00	6.08	WB OUT C&G	248	
PR US20/HARRISON	1311+13.21	1312+00.00	26.00	EB LANES	116	
PR US20/HARRISON	1311+13.21	1314+80.00	6.08	EB OUT C&G	70	
PR US20/HARRISON	1312+00.00	1314+80.00	VAR 26-60.7	EB LANES	1,060	
PR US20/HARRISON	1312+57.64	1314+80.00	6.08	MEDIAN	230	
PR US20/HARRISON	1313+25.26	1314+80.00	VAR 38-66.7	WB LANES	862	
PR US20/HARRISON	1315+80.00	1316+91.82	VARIES	RAMP A PAVEMENT	307	
PR US20/HARRISON	1315+80.00	1316+92.39	6.08	RAMP A ISLAND	149	
PR US20/HARRISON	1315+80.00	1317+99.47	VARIES	RAMP B PAVEMENT	466	
PR US20/HARRISON	1315+80.00	1317+99.47	6.08	RAMP B ISLAND	311	
PR US20/HARRISON	1316+95.70	1322+80.00	6.08	MEDIAN	924	
PR US20/HARRISON	1315+80.00	1322+80.00	6.08	NE C&G	490	
PR US20/HARRISON	1315+80.00	1322+80.00	6.08	SE C&G	493	
PR US20/HARRISON	1315+80.00	1322+80.00	VARIES	EB LANES	2,502	
PR US20/HARRISON	1315+80.00	1322+80.00	VARIES	WB LANES	3,606	
PR US20/HARRISON	1330+80.00	1332+19.28	36.00	EB LANES	557	
PR US20/HARRISON	1330+80.00	1333+80.00	6.08	EB OUT C&G	203	
PR US20/HARRISON	1330+80.00	1332+19.28	6.08	MEDIAN	94	
PR US20/HARRISON	1330+80.00	1333+80.00	36.00	WB LANES	1,200	
PR US20/HARRISON	1330+80.00	1333+80.00	6.08	WB OUT C&G	203	
PR US20/HARRISON	1332+19.28	1333+80.00	VAR 36-58.2	EB LANES	825	
PR US20/HARRISON	1332+19.28	1333+80.00	6.08	MEDIAN	109	
PR US20/HARRISON	1337+00.00	1338+32.34	4.58	EB OUT C&G	68	
PR US20/HARRISON	1337+00.00	1337+26.30	4.58	WB OUT C&G	17	
PR US 20/HARRISON	1322+80.00	1326+80.00	36.00	EB LANES	1,600	
PR US 20/HARRISON	1322+80.00	1326+80.00	6.08	EB OUT C&G	271	
PR US 20/HARRISON	1322+80.00	1326+80.00	6.08	MEDIAN	541	
PR US 20/HARRISON	1322+80.00	1326+80.00	36.00	WB LANES	1,600	
PR US 20/HARRISON	1322+80.00	1326+80.00	6.08	WB OUT C&G	270	
PR US 20/HARRISON	1326+80.00	1330+80.00	36.00	EB LANES	1,600	
PR US 20/HARRISON	1326+80.00	1330+80.00	6.08	EB OUT C&G	270	
PR US 20/HARRISON	1326+80.00	1330+80.00	6.08	MEDIAN	540	
PR US 20/HARRISON	1326+80.00	1330+80.00	36.00	WB LANES	1,600	
PR US 20/HARRISON	1326+80.00	1330+80.00	6.08	WB OUT C&G	271	
PR US 20/HARRISON	1314+80.00	1315+80.00	VARIES	RAMP B RT SHLD	71	
PR US 20/HARRISON	1314+80.00	1315+80.00	VARIES	RAMP B LT SHLD	23	
PR US 20/HARRISON	1314+80.00	1315+80.00	VARIES	RAMP B C&G	78	
PR US 20/HARRISON	1314+80.00	1315+80.00	VARIES	RAMP B ISLAND	99	
PR US 20/HARRISON	1314+80.00	1315+80.00	VARIES	RAMP B PVMT	918	
PR US 20/HARRISON	1314+80.00	1315+80.00	VARIES	WB DDI PVMT	439	
PR US 20/HARRISON	1314+80.00	1315+80.00	VARIES	MEDIAN	112	
PR US 20/HARRISON	1314+80.00	1315+80.00	VARIES	EB DDI PVMT	297	
PR US 20/HARRISON	1314+80.00	1315+80.00	VARIES	RAMP A ISLAND	181	
PR US 20/HARRISON	1314+80.00	1315+80.00	VARIES	RAMP A PVMT	815	
PR US 20/HARRISON	1314+80.00	1315+80.00	VARIES	RAMP A C&G	97	
PR US 20/HARRISON	1314+80.00	1315+80.00	VARIES	RAMP A LT SHLD	29	
PR US 20/HARRISON	1314+80.00	1315+80.00	VARIES	RAMP A RT SHLD	113	
PR US 20/HARRISON	1333+80.00	1334+19.28	VARIES	EB LANES	259	
PR US 20/HARRISON	1334+19.28	1337+00.00	60.00	EB LANES	1,871	
PR US 20/HARRISON	1333+80.00	1337+00.00	6.08	EB OUT C&G	216	
PR US 20/HARRISON	1333+80.00	1337+00.00	VARIES	MEDIAN	215	
PR US 20/HARRISON	1333+80.00	1337+00.00	36.00	WB LANES	1,280	
PR US 20/HARRISON	1333+80.00	1337+00.00	6.08	WB OUT C&G	216	
PR HARRISON	126+24.86	127+08.44	78.00	PAVEMENT	725	
PR HARRISON	127+08.44	129+75.00	36.00	EB LANES	1,067	
PR HARRISON	127+08.44	129+75.00	6.00	MEDIAN	178	
PR HARRISON	127+08.44	127+46.70	36.00	WB LANES	154	
PR HARRISON	127+46.70	129+75.00	48.00	WB LANES	1,218	
PR HARRISON	127+46.70	129+75.00	6.08	WB OUT C&G	155	
PR HARRISON	128+28.00	129+75.00	6.08	EB OUT C&G	100	
PR HARRISON	130+75.00	134+75.00	36.00	EB LANES	1,600	
PR HARRISON	130+75.00	134+75.00	6.08	EB OUT C&G	271	
PR HARRISON	130+75.00	131+12.70	6.00	MEDIAN	26	
PR HARRISON	130+75.00	131+12.70	48.00	WB LANES	202	
PR HARRISON	130+75.00	134+75.00	6.08	WB OUT C&G	270	
PR HARRISON	131+12.70	133+32.70	6.08	MEDIAN	282	
PR HARRISON	131+12.70	133+32.70	VAR 36-48	WB LANES	1,040	
PR HARRISON	133+32.70	134+75.00	6.08	MEDIAN	192	

Z0028415						
GEOTECHNICAL REINFORCEMENT						
80% FED / 20% STATE						
ROAD	STA	STA	WIDTH	DESCRIPTION	SQ YD	REMARKS
PR HARRISON	133+32.70	134+75.00	48.00	WB LANES	759	
PR HARRISON	135+75.00	140+75.00	36.00	EB LANES	2,000	
PR HARRISON	135+75.00	140+75.00	6.08	EB OUT C&G	338	
PR HARRISON	135+75.00	140+75.00	6.08	MEDIAN	676	
PR HARRISON	135+75.00	137+39.12	36.00	WB LANES	657	
PR HARRISON	135+75.00	140+75.00	6.08	WB OUT C&G	338	
PR HARRISON	137+39.12	140+75.00	VAR 36-43.5	WB LANES	1,483	
PR HARRISON	142+75.00	144+48.18	36.00	EB LANES	693	
PR HARRISON	142+75.00	144+75.00	6.08	EB OUT C&G	135	
PR HARRISON	142+75.00	144+19.23	6.08	MEDIAN	195	
PR HARRISON	142+75.00	143+69.12	VAR 47.9-50	WB LANES	512	
PR HARRISON	142+75.00	144+75.00	6.08	WB OUT C&G	135	
PR HARRISON	144+48.18	144+75.00	VAR 36-36.3	EB LANES	108	
PR HARRISON	144+19.23	144+75.00	6.08	MEDIAN	75	
PR HARRISON	143+69.12	144+75.00	VAR 50-50.3	WB LANES	589	
PR HARRISON	150+25.00	152+52.04	VAR 50-38	WB LANES	1,023	
PR HARRISON	150+25.00	153+08.66	6.08	WB OUT C&G	192	
PR HARRISON	150+25.00	151+86.16	6.08	MEDIAN	149	
PR HARRISON	150+25.00	153+08.66	26.00	EB LANES	552	
PR HARRISON	152+52.04	153+08.66	38.00	WB LANES	151	
PR HARRISON	123+50.00	125+69.46	48.00	EB LANES	1,171	
PR HARRISON	123+50.00	124+47.56	8.00	EB SHLD	87	
PR HARRISON	124+47.56	124+82.34	6.08	EB OUT C&G	32	
PR HARRISON	123+50.00	125+69.46	6.00	MEDIAN	147	
PR HARRISON	123+50.00	125+69.46	24.00	WB LANES	586	
PR HARRISON	123+50.00	124+06.35	8.00	WB SHLD	51	
PR HARRISON	124+06.35	124+39.78	6.08	WB OUT C&G	31	
PR HARRISON	125+69.46	126+24.86	78.00	PAVEMENT	481	
PR HARRISON	145+75.00	150+25.00	VARIES	EB LANES	1,630	
PR HARRISON	145+75.00	150+25.00	VARIES	RAMP D PVMT	1,216	
PR HARRISON	145+75.00	150+25.00	VARIES	RAMP D RT SHLD	61	
PR HARRISON	145+75.00	150+25.00	VARIES	RAMP D LT SHLD	25	
PR HARRISON	145+75.00	150+25.00	6.08	RAMP D ISLAND	251	
PR HARRISON	145+75.00	150+25.00	6.08	SW CORNER C&G	206	
PR HARRISON	145+75.00	150+25.00	6.08	SE CORNER C&G	159	
PR HARRISON	145+75.00	150+25.00	6.08	W MEDIAN	237	
PR HARRISON	145+75.00	150+25.00	6.08	E MEDIAN	196	
PR HARRISON	145+75.00	150+25.00	VARIES	WB LANES	2,014	
PR HARRISON	145+75.00	150+25.00	6.08	RAMP C ISLAND	268	
PR HARRISON	145+75.00	150+25.00	VARIES	RAMP C PVMT	825	
PR HARRISON	145+75.00	150+25.00	VARIES	RAMP C RT SHLD	26	
PR HARRISON	145+75.00	150+25.00	VARIES	RAMP C LT SHLD	15	
PR HARRISON	145+75.00	150+25.00	6.08	NW CORNER C&G	139	
PR HARRISON	145+75.00	150+25.00	6.08	NE CORNER C&G	63	
PR HARRISON	129+75.00	130+75.00	36.00	EB LANES	400	
PR HARRISON	129+75.00	130+75.00	6.08	EB OUT C&G	68	
PR HARRISON	129+75.00	130+75.00	6.00	MEDIAN	67	
PR HARRISON	129+75.00	130+75.00	48.00	WB LANES	533	
PR HARRISON	129+75.00	130+75.00	6.08	WB OUT C&G	68	
PR HARRISON	134+75.00	135+75.00	36.00	EB LANES	400	
PR HARRISON	134+75.00	135+75.00	6.08	EB OUT C&G	68	
PR HARRISON	134+75.00	135+75.00	6.08	MEDIAN	135	
PR HARRISON	134+75.00	135+75.00	36.00	WB LANES	400	
PR HARRISON	134+75.00	135+75.00	6.08	WB OUT C&G	68	
PR EB DDI	3003+75.00	3004+76.14	VARIES	EB LANES	229	
PR EB DDI	3003+75.00	3004+76.14	38.00	EB LANES	427	
PR EB DDI	3003+75.00	3004+76.14	6.08	EB OUT C&G	68	
PR HARRISON	144+75.00	145+75.00	6.08	MEDIAN	135	
PR WB DDI	2019+52.06	2020+52.60	VARIES	WB LANES	556	
PR WB DDI	2019+52.06	2020+52.60	6.08	WB OUT C&G	68	
PR HARRISON	140+75.00	141+00.00	36.00	EB LANES	100	
PR EB DDI	3000+00.00	3001+75.00	36.00	EB LANES	6,300	
PR HARRISON	140+75.00	142+75.00	6.08	EB OUT C& G	1,216	
PR HARRISON	140+75.00	142+75.00	6.08	MEDIAN	2,432	
PR HARRISON	140+75.00	141+00.00	VARIES	WB LANES	1,094	
PR WB DDI	2022+52.72	2024+27.72	VARIES	WB LANES	8,044	
PR HARRISON	140+75.00	142+75.00	6.08	WB OUT C&G	1,216	

Z0028415						
GEOTECHNICAL REINFORCEMENT						
80% FED / 20% STATE						
ROAD	STA	STA	WIDTH	DESCRIPTION	SQ YD	REMARKS
PR RAMP A	102+84.63	106+00.00	VAR 24-16	RAMP PVMT	710	
PR RAMP A	106+00.00	110+77.23	16.00	RAMP PVMT	849	
PR RAMP A	102+84.63	110+77.23	7.50	RT SHLD	661	
PR RAMP A	102+84.63	102+85.98	7.50	LT SLD	2	
PR RAMP A	102+85.98	107+65.06	5.50	LT SLD	293	
PR RAMP B	217+13.88	221+91.57	24.00	RAMP PVMT	1,274	
PR RAMP B	221+91.57	224+70.38	VAR 24-36	RAMP PVMT	934	
PR RAMP B	224+70.38	225+74.38	36.00	RAMP PVMT	416	
PR RAMP B	217+13.88	225+74.38	11.50	RT SHLD	1,100	
PR RAMP B	217+13.88	225+74.38	7.50	LT SLD	718	
PR RAMP C	304+04.26	312+45.76	16.00	RAMP PVMT	1,496	
PR RAMP C	312+45.76	314+69.76	VAR 16-24	RAMP PVMT	488	
PR RAMP C	314+69.76	317+29.54	24.00	RAMP PVMT	693	
PR RAMP C	304+04.26	317+29.54	7.50	RT SHLD	1,105	
PR RAMP C	306+69.02	317+29.54	5.50	LT SLD	649	
PR RAMP D	402+33.25	406+84.15	VAR 24-16	RAMP PVMT	1,003	
PR RAMP D	406+84.15	412+00.00	16.00	RAMP PVMT	918	
PR RAMP D	402+33.25	412+00.00	7.50	RT SHLD	806	
PR RAMP D	402+33.25	409+86.82	5.50	LT SHLD	461	
PR NB I-39	10+00.00	13+49.41	24.00	NB LANES	932	
PR NB I-39	10+00.00	13+49.41	VAR 4.0-18.0	RAMP A GORE	329	
PR NB I-39	10+00.00	16+03.81	VAR	NB IN SHLD	1,321	
PR NB I-39	13+49.41	17+52.45	VAR 36-44	NB LANES	1,823	
PR NB I-39	13+49.41	15+13.70	6.50	NB OUT SHLD	119	
PR NB I-39	15+13.70	17+52.45	VAR 6.5-12.5	NB OUT SHLD	238	
PR NB I-39	17+52.45	22+00.00	36.00	NB LANES	1,791	
PR NB I-39	17+52.45	22+00.00	12.50	NB OUT SHLD	622	
PR NB I-39	16+03.81	21+29.92	12.50	NB IN SHLD	731	
PR NB I-39	21+29.92	22+00.00	VAR 9-12	NB IN SHLD	86	
PR SB I-39	1306+33.75	1311+17.51	36.00	SB LANES	1,936	
PR SB I-39	1306+33.75	1311+28.05	12.00	SB IN SHLD	660	
PR SB I-39	1306+33.75	1308+52.91	12.00	SB OUT SHLD	293	
PR SB I-39	1308+52.91	1311+17.51	VAR 6.3-20.3	RAMP C GORE	392	
PR I-39 SB	1311+17.51	1319+95.00	36'-58.3'	SB LANES	2,142	
PR I-39 SB	1315+22.06	1319+95.00	36.00	SB LANES	1,892	
PR I-39 SB	1311+17.51	1319+95.00	12.50	LT SHOULDER	1,170	
RAMP C	300+95.01	304+04.26	6.50	RT SHOULDER	207	
RAMP C	300+00.00	300+95.01	VAR 6-12	RT SHOULDER	91	
PR I-39 SB	1315+22.06	1319+95.00	12.50	RT SHOULDER	631	
SOUTH MALL DR	298+49.09	299+55.43			1,362	
SOUTH MALL DR	300+33.42	303+37.00			3,321	
				SUBTOTAL	120,556	
				GRAND TOTAL	120,556	

60603500
COMBINATION CONCRETE CURB AND GUTTER TYPE B-6.06
80% FED / 20% STATE

ROAD	STA	OFFSET	LT/RT	STA	OFFSET	LT/RT	FOOT	REMARKS
HARRISON AVE	116+37.72	3.6	RT	118+98.78	3.2	LT	261	
HARRISON AVE	119+82.16	5.8	RT	125+69.46	3.5	LT	598	
HARRISON AVE	127+08.44	3	RT	132+77.71	7	LT	572	
HARRISON AVE	1333+19.22	2.5	RT	1337+00.00	3.5	LT	381	
						SUBTOTAL	1,812	
						GRAND TOTAL	1,812	

60605000
COMBINATION CONCRETE CURB AND GUTTER TYPE B-6.24
80% FED / 20% STATE

ROAD	STA	OFFSET	LT/RT	STA	OFFSET	LT/RT	FOOT	REMARKS
HARRISON AVE	116+37.72	7.1	RT	119+82.16	5.8	RT	344	
HARRISON AVE	118+98.78	3.7	LT	125+59.03	7.0	RT	660	
HARRISON AVE	124+29.95	35.0	LT	124+39.78	35.0	LT	10	
HARRISON AVE	124+72.16	47.0	RT	124+82.34	47.0	RT	10	
HARRISON AVE	127+10.69	7.0	RT	141+00.00	7.0	RT	1,387	
HARRISON AVE	132+77.71	7.0	LT	141+00.00	7.0	RT	823	
DDI EB	3000+00.00	2.0	LT	3006+47.17	2.0	LT	647	
DDI WB	2017+80.14	2.0	LT	2024+27.72	2.0	LT	647	
HARRISON AVE	128+28.01	47.0	RT	141+00.00	47.0	RT	1,259	
DDI EB	3000+00.00	38.0	RT	3006+82.10	159.8	RT	781	
HARRISON AVE	127+46.70	47.0	LT	141+00.00	55.0	LT	1,368	
DDI WB	2017+00.00	152.5	RT	2024+27.72	46.0	RT	779	
DDI EB	3007+34.25	2.0	LT	3008+17.77	2.0	LT	397	DDI ISLAND
DDI WB	2016+08.42	2.0	LT	2017+13.92	2.0	LT	371	DDI ISLAND
DDI EB	3008+35.98	81.0	LT	3008+93.66	7.7	LT	112	
DDI EB	3007+86.09	28.0	RT	3010+47.50	28.0	RT	252	
DDI WB	2012+02.80	2.0	LT	2016+21.62	144.4	LT	524	
DDI WB	2013+37.50	40.0	RT	2016+43.13	40.0	RT	252	
DDI EB	3012+17.39	2.0	LT	3015+91.22	169.1	LT	244	
DDI EB	3012+17.39	28.0	RT	3016+69.72	28.0	RT	282	
DDI WB	2008+09.67	107.3	LT	2012+02.80	2.0	LT	462	
DDI WB	2007+40.99	40.0	RT	2012+02.80	40.0	RT	283	
DDI EB	3015+89.50	2.0	LT	3017+21.57	2.0	LT	489	DDI ISLAND
DDI WB	2007+78.59	2.0	LT	2006+70.69	2.0	LT	608	DDI ISLAND
DDI EB	3018+09.52	2.0	LT	3024+12.91	2.0	LT	611	
DDI EB	3017+38.36	170.8	RT	3024+12.91	38.0	RT	749	
DDI WB	2000+00.00	38.0	RT	2006+75.00	165.0	RT	745	
DDI WB	2000+00.00	2.0	LT	2006+03.61	2.0	LT	603	
HARRISON AVE	1323+00.00	47.0	RT	1338+31.32	75.0	RT	1,536	
HARRISON AVE	1323+00.00	7.0	RT	1333+19.23	2.5	RT	1,019	
HARRISON AVE	1323+00.00	7.0	LT	1337+00.00	7.0	LT	1,405	
HARRISON AVE	1323+00.00	47.0	LT	1337+00.00	47.0	LT	1,400	
SOUTH MALL DR	298+47.87		LT	299+44.09		LT	164	
SOUTH MALL DR	298+48.52		RT	299+48.92		RT	230	
SOUTH MALL DR	300+20.63		LT	302+99.06		LT	375	
SOUTH MALL DR	300+47.22		RT	302+99.36		RT	296	
						SUBTOTAL	22,124	
						GRAND TOTAL	22,124	

60608600
COMBINATION CONCRETE CURB AND GUTTER, TYPE M-6.06
80% FED / 20% STATE

ROAD	STA	STA	OFFSET	LENGTH (FT)	REMARKS
SOUTH MALL DR	299+32.19	299+47.86	LT	25	ISLAND
SOUTH MALL DR	299+34.29	299+49.44	RT	28	ISLAND
SOUTH MALL DR	300+39.27	300+60.24	LT	35	ISLAND
SOUTH MALL DR	300+42.16	300+72.66	RT	40	ISLAND
			SUBTOTAL	128	
			GRAND TOTAL	128	

60610400
COMBINATION CONCRETE CURB AND GUTTER, TYPE M-6.24
80% FED / 20% STATE

ROAD	STA	STA	OFFSET	LENGTH (FT)	REMARKS
SOUTH MALL DR	299+34.29	299+49.65	RT	31	ISLAND
SOUTH MALL DR	299+32.19	299+47.86	LT	26	ISLAND
SOUTH MALL DR	300+39.27	300+60.23	LT	40	ISLAND
SOUTH MALL DR	300+42.16	300+72.66	RT	45	ISLAND
			SUBTOTAL	141	
			GRAND TOTAL	141	

60618300
CONCRETE MEDIAN SURFACE, 4 INCH
80% FED / 20% STATE

ROAD	STA	STA	LT/RT/CT	DESCRIPTION	SQ FT	REMARKS
PR HARRISON	116+37.72	125+62.47	CT	MEDIAN	4,146	
PR HARRISON	127+14.95	147+39.95	CT	MEDIAN	26,775	
PR HARRISON	147+66.12	149+09.58	RT	RAMP D ISLAND	5,225	
PR HARRISON	148+89.19	151+86.03	CT	MEDIAN	7,445	
PR US 20/HARRISON	1312+57.78	1315+53.84	CT	MEDIAN	7,823	
PR US 20/HARRISON	1315+31.39	1317+96.53	RT	RAMP B ISLAND	9,734	
PR US 20/HARRISON	1317+03.56	1337+00.00	CT	MEDIAN	27,118	
SOUTH MALL DR	299+41.75		LT		121	
SOUTH MALL DR	299+43.22		RT		176	
SOUTH MALL DR	300+47.31		LT		255	
SOUTH MALL DR	300+52.05		RT		306	
			SUBTOTAL		89,124	
			GRAND TOTAL		89,124	

NOTE: AREAS MEASURED IN CADD

60619910
CONCRETE MEDIAN, TYPE SB-6.18
80% FED / 20% STATE

ROAD	STA	STA	AREA (SF)	OFFSET	TOTAL	REMARKS
SOUTH MALL DR	300+66.41	303+37.00	1623.54	CL	1624	MEDIAN
				SUBTOTAL	1,624	
				GRAND TOTAL	1,624	

60620000
CONCRETE MEDIAN, TYPE SB-6.24
80% FED / 20% STATE

ROAD	STA	STA	LT/RT/CT	DESCRIPTION	SQ FT	REMARKS
HARRISON AVE	125+62.47	125+68.46	LT	RAMPED NOSE	42	
HARRISON AVE	127+08.94	127+14.95	RT	RAMPED NOSE	39	
				SUBTOTAL	81	
				GRAND TOTAL	81	

NOTE: AREAS MEASURED IN CADD

64300900
IMPACT ATTENUATORS (SEVERE USE, WIDE), TEST LEVEL 2
80% FED / 20% STATE

ROAD	STA	OFFSET	LT/RT/CT	EACH	REMARKS
HARR/US20	1321+70.08	0	CT	1	
HARR/US20	1322+09.00	0	CT	1	
HARR/US20	143+20.08	0	CT	1	
HARR/US20	143+59.00	0	CT	1	
			SUBTOTAL	4	
			GRAND TOTAL	4	

X6060714
CONCRETE MEDIAN (SPECIAL)
80% FED / 20% STATE

ROAD	STA	STA	LT/RT/CT	DESCRIPTION	SQ FT	REMARKS
PR US 20/HARRISON	1314+86.00	1316+79.00	LT	RAMP A ISLAND	6,673	
PR HARRISON	147+34.00	149+09.00	LT	RAMP C ISLAND	3,844	
				SUBTOTAL	10,517	
				GRAND TOTAL	10,517	

NOTE: AREAS MEASURED IN CADD

X7060330
IMPACT ATTENUATORS, TEMPORARY (NON-REDIRECTIVE) TEST LEVEL 3 (TO REMAIN PERMANENTLY)
80% FED / 20% STATE

ROAD	STA	OFFSET	LT/RT	EACH	REMARKS
PR US 20/HARRISON	1312+21.06	0.0	CT	1	
PR HARRISON	152+21.64	0.0	CT	1	
			SUBTOTAL	2	
			GRAND TOTAL	2	

IMPACT ATTENUATORS, TEMPORARY (FULLY REDIRECTIVE, NARROW) TEST LEVEL 3 (TO REMAIN PERMANENTLY
80% FED / 20% STATE

ROAD	STA	OFFSET	LT/RT	EACH	REMARKS
PR RAMP D	410+92.31	2.6	RT	1	
			SUBTOTAL	1	
			GRAND TOTAL	1	

63700280					63700380					63700900					X7820007
CONCRETE BARRIER, DOUBLE FACE, 44 INCH HEIGHT					CONCRETE BARRIER, VARIABLE CROSS SECTION 44 INCH HEIGHT					CONCRETE BARRIER BASE					GUARDRAIL REFLECTORS, TYPE C (SPECIAL)
STATION	OFFSET LT/RT	STATION	OFFSET LT/RT	LENGTH (FOOT)	STATION	OFFSET LT/RT	STATION	OFFSET LT/RT	AREA (SQ YD)	STATION	OFFSET LT/RT	STATION	OFFSET LT/RT	AREA (SQ YD)	EACH
80% FED / 20% STATE															
NB I-39															
12+00.00	13.5' LT	16+47.59	13.5' LT	448	10+00.00	13.5' LT	12+00.00	13.5' LT	200	10+00.00	13.5' LT	16+47.59	13.5' LT	648	8
SUBTOTAL				448					200					648	8
GRAND TOTAL				448					200					648	8

NOTE: SEE GUARDRAIL SCHEDULE FOR ADDITIONAL TYPE C REFLECTOR QUANTITY

63000001					63100167			63100045			72501000	X7820007
STEEL PLATE BEAM GUARDRAIL, TYPE A, 6 FOOT POSTS					TRAFFIC BARRIER TERMINAL, TYPE 1 (SPECIAL) TANGENT			TRAFFIC BARRIER TERMINAL, TYPE 2			TERMINAL MARKER - DIRECT APPLIED	GUARDRAIL REFLECTORS, TYPE C (SPECIAL)
STATION	OFFSET LT/RT	STATION	OFFSET LT/RT	LENGTH (FOOT)	STATION	OFFSET LT/RT	EACH	STATION	OFFSET LT/RT	EACH	EACH	EACH
80% FED / 20% STATE												
WB US 20/HARRISON AVE												
2010+06.22	2.6' LT	2011+06.54	2.6' LT	100	2009+56.41	4.6' LT	1	2011+06.54	2.6' LT	1	1	4
SUBTOTALS				100			1			1	1	4
TOTALS				100			1			1	1	4

NOTE: SEE CONCRETE BARRIER SCHEDULE FOR ADDITIONAL TYPE C REFLECTOR QUANTITY

60600095 CLASS SI CONCRETE (OUTLET)								
80% FED / 20% STATE								
ROAD	STA	OFFSET	RT/LT	STA	OFFSET	RT/LT	CU YD	REMARKS
HARRISON AVE	1337+00.00	47.00	LT	1337+61.33	60.05	LT	4.3	
HARRISON AVE	123+73.14	66.16	RT	124+72.16	47.02	RT	6.6	
HARRISON AVE	123+76.49	46.12	LT	124+29.95	34.99	LT	3.8	
						SUBTOTAL	15	
						GRAND TOTAL	14.7	
NOTES: AREAS OF OUTLET MEASURED IN CADD								

66400305 CHAIN LINK FENCE, 6'								
80% FED / 20% STATE								
ROAD	STA	OFFSET	LT/RT	STA	OFFSET	LT/RT	FOOT	REMARKS
PR HARRISON AVE	1324+30.13	125	RT	1328+52.62	110	RT	504	HARRISON AVE RDWY PLANS
PR HARRISON AVE	141+98.87	150	LT	143+17.91	150	LT	119	HARRISON AVE RDWY PLANS
PR HARRISON AVE/PR I-39	143+17.91	150	LT	2728+91.21	692	LT	598	HARRISON AVE RDWY/I-39 RDWY PLAN
PR I-39	2728+91.21	692	LT	2733+95.80	313	LT	607	GRADING PLAN RAMP C
PR I-39	2733+95.80	313	LT	2736+33.56	407	LT	251	GRADING PLAN RAMP C
PR I-39	2736+33.56	407	LT	2737+49.11	135	LT	295	GRADING PLAN RAMP C
PR I-39	2737+49.11	135	LT	2738+25.00	135	LT	76	I-39 RDWY PLAN
PR I-39	2738+25.00	135	LT	2740+50.00	100	LT	228	I-39 RDWY PLAN
						SUBTOTAL	2,678	
						GRAND TOTAL	2,678	

	100% FOUR RIVERS			
	SANITARY SEWER MAIN LINE REPAIR 8"	SANITARY MANHOLES TO BE REMOVED	SANITARY MANHOLES TO BE ADJUSTED WITH NEW TYPE 1 FRAME, CLOSED LID	SANITARY MANHOLES TO BE RECONSTRUCTED WITH NEW TYPE 1 FRAME, CLOSED LID
	X1200037	X6026054	X6026056	X6026057
	FOOT	EACH	EACH	EACH
ROAD	PR HARRISON	PR HARRISON	PR HARRISON	PR HARRISON
STA	-	126+73.42	141+29.24	141+26.07
OFFSET	-	113.04	94.36	128.38
RT/LT	-	LT	LT	RT
REMARKS	SEWER PLACED IN LOCATION OF REMOVED MANHOLE X6026054	-	-	-
TOTAL	15	1	1	1

Z0025505 PROPERTY MARKERS					
80% FED / 20% STATE					
ROAD	STA	OFFSET	LT/RT	EACH	REMARKS
MALL DR	301+28.88	50.02	RT	1	
MALL DR	302+62.93	50.06	RT	1	
			SUBTOTAL	2	
			GRAND TOTAL	2	

56109210 WATER VALVES TO BE ADJUSTED					
100% VILLAGE					
ROAD	STA	OFFSET	LT/RT	EACH	REMARKS
MALL DR	298+63.06	49.51	LT	1	
			SUBTOTAL	1	
			GRAND TOTAL	1	

63500105 DELINEATORS								
80% FED / 20% STATE								
ROAD	STA	OFFSET	STA	OFFSET	SINGLE/DOUBLE	SPACING (FOOT)	COLOR	EACH	REMARKS
PR RAMP A	102+17.01	LT	103+01.00	LT	SINGLE	100.00	AMBER	1	
PR RAMP A	102+17.01	RT	103+01.00	RT	SINGLE	100.00	CRYSTAL	1	
PR RAMP A	103+01.00	LT	107+65.06	LT	SINGLE	80.00	AMBER	6	
PR RAMP A	103+01.00	RT	108+77.23	RT	SINGLE	80.00	CRYSTAL	8	
PR RAMP A	108+77.23	RT	110+77.23	RT	SINGLE	100.00	CRYSTAL	2	
PR RAMP A	110+77.23	RT	114+77.23	RT	DOUBLE	100.00	CRYSTAL	4	
PR RAMP B	217+13.88	LT	219+08.41	LT	SINGLE	75.00	AMBER	3	
PR RAMP B	217+13.88	RT	219+08.41	RT	SINGLE	75.00	CRYSTAL	3	
PR RAMP B	219+08.41	LT	221+83.31	LT	SINGLE	100.00	AMBER	3	
PR RAMP B	219+08.41	RT	221+83.31	RT	SINGLE	100.00	CRYSTAL	3	
PR RAMP B	221+83.31	RT	224+44.51	RT	SINGLE	50.00	CRYSTAL	6	
PR RAMP C	300+00.00	RT	304+04.26	RT	DOUBLE	100.00	CRYSTAL	5	
PR RAMP C	304+04.26	RT	307+78.29	RT	SINGLE	100.00	CRYSTAL	4	
PR RAMP C	307+78.29	LT	312+45.76	LT	SINGLE	75.00	AMBER	7	
PR RAMP C	307+78.29	RT	312+45.76	RT	SINGLE	75.00	CRYSTAL	7	
PR RAMP C	312+45.76	LT	314+69.76	LT	SINGLE	100.00	AMBER	3	
PR RAMP C	312+45.76	RT	314+69.76	RT	SINGLE	100.00	CRYSTAL	3	
PR RAMP C	314+69.76	RT	316+24.94	RT	SINGLE	55.00	CRYSTAL	3	
PR RAMP D	402+17.35	LT	406+84.15	LT	SINGLE	100.00	AMBER	5	
PR RAMP D	402+17.35	RT	406+84.15	RT	SINGLE	100.00	CRYSTAL	5	
PR RAMP D	406+84.15	LT	409+86.82	LT	SINGLE	80.00	AMBER	4	
PR RAMP D	406+84.15	RT	410+94.23	RT	SINGLE	80.00	CRYSTAL	6	
PR RAMP D	410+94.23	RT	412+00.00	RT	DOUBLE	100.00	CRYSTAL	2	
PR NB I-39	12+36.38	LT	22+00.00	LT	SINGLE	400.00	AMBER	3	
PR NB I-39	17+52.45	RT	22+00.00	RT	SINGLE	400.00	CRYSTAL	2	
PR SB I-39	1306+33.75	LT	1311+17.51	LT	SINGLE	400.00	AMBER	2	
PR SB I-39	1306+33.75	RT	1308+52.91	RT	SINGLE	400.00	CRYSTAL	1	
PR SB I-39	1311+17.51	LT	1319+95.00	LT	SINGLE	400.00	AMBER	3	
PR SB I-39	1315+22.00	RT	1319+95.00	RT	SINGLE	400.00	CRYSTAL	2	
							SUBTOTAL	107	
							GRAND TOTAL	107	
NOTE: SEE DRAINAGE SCHEDULE FOR LOCATIONS AND QUANTITIES OF DELINEATORS AT CULVERTS.									

52200020 TEMPORARY SOIL RETENTION SYSTEM												
80% FED / 20% STATE												
ROAD	STA	OFFSET	STA	OFFSET	PIPE ID	STAGE	TRENCH BOTTOM ELEV	GROUND ELEV	HEIGHT (FT)	TRENCH BOTTOM WIDTH (FT)	TRENCH TOP WIDTH (FT)	SQ FT	REMARKS
PR HARRISON AVE	150+01	3.5	150+45	3.5	P-K505	1 and 2	759.0	778.2	19.2	6.0	44.5	486	
PR HARRISON AVE	146+84	3.5	147+30	3.5	P-K609	1 and 2	756.8	776.7	19.8	6.0	45.7	512	
PR HARRISON AVE	139+34	21.0	139+70	21.0	P-K715	1 and 1B	758.6	772.8	14.2	7.0	35.4	300	
PR HARRISON AVE	139+35	2.4	139+69	2.4	P-K715	1 and 2B	758.7	772.5	13.9	7.0	34.7	289	
PR US 20/HARRISON AVE	1336+13	-4.1	1336+60	-4.1	P-L207	1 and 2	729.9	749.2	19.3	9.0	47.5	545	
PR HARRISON AVE	145+32	-101.0	145+65	-129.1	T-K420-1	2	757.4	776.6	19.2	5.0	43.3	463	
											SUBTOTAL	2,596	
											GRAND TOTAL	2,596	
NOTE: CALCULATIONS ASSUME 1:1 SIDE SLOPES FROM TRENCH BOTTOM TO SURFACE													

MODEL: Default
FILE NAME: pw://benesch-pw.bentley.com:benesch-pw-01/Documents/10800s/10800_00/Eng_Docs/CAD Sheets/General/D0264371-D01-sht-SCH-16.dgn

benesch
Allied Benesch & Company
35 W. Wacker Drive, Suite 3300
Chicago, Illinois 60601
312-565-0450 Job No. 10800.00

USER NAME = JMajcher		DESIGNED - A.GIBSON	REVISED -	
		DRAWN - J.MAJCHER	REVISED -	
PLOT SCALE = 0.167 ' / In.		CHECKED - J.TARDY	REVISED -	
PLOT DATE = 12/5/2023		DATE - 10/13/2023	REVISED -	

STATE OF ILLINOIS
DEPARTMENT OF TRANSPORTATION

SCHEDULE OF QUANTITIES
MISCELLANEOUS

SCALE: N/A | SHEET 19 OF 48 SHEETS | STA. | TO STA.

F.A.* RTE.	SECTION	COUNTY	TOTAL SHEETS	SHEET NO.
*	(5)RS & (5&5HB)RC	WINNEBAGO	1279	67
		CONTRACT NO. 64R71		
	ILLINOIS FED. AID PROJECT			

* FAI ROUTE 39 (I-39) & FAP ROUTE 525 (US 20)

70600260					
IMPACT ATTENUATORS, TEMPORARY (FULLY REDIRECTIVE, NARROW), TEST LEVEL 3					
80% FED / 20% STATE					
ROAD	STA	OFFSET	LT/RT	EACH	REMARKS
Stage 1					
US 20	117+00	0	RT	1	
US 20	125+50	25	LT	1	
US 20	127+00	1	LT	1	
US 20	127+00	25	LT	1	
US 20	138+50	0	RT	1	
EX RAMP CA	138+50	30	RT	1	
US 20	148+00	26	LT	1	
US 20	149+00	26	LT	1	
US 20	1338+00	32	LT	1	
Stage 2B					
US 20	1325+50	18	LT	1	
US 20	1326+00	0	RT	1	
US 20	1338+03.03	53	RT	1	
			SUBTOTAL	12	
			GRAND TOTAL	12	

70600270					
IMPACT ATTENUATORS, TEMPORARY (FULLY REDIRECTIVE, WIDE), TEST LEVEL 3					
80% FED / 20% STATE					
ROAD	STA	OFFSET	LT/RT	EACH	REMARKS
Stage 4					
I-39	2730+57.91	20	RT	1	
I-39	1314+89.26	25	LT	1	
			SUBTOTAL	2	
90% FED / 10% STATE					
ROAD	STA	OFFSET	LT/RT	EACH	REMARKS
Stage X					
			SUBTOTAL	0	
			GRAND TOTAL	2	

70600250					
IMPACT ATTENUATORS, TEMPORARY (NON-REDIRECTIVE), TEST LEVEL 3					
80% FED / 20% STATE					
ROAD					
Stage 1					
US 20	120+00	21	RT	1	
US 20	136+00	57	LT	1	
US 20	152+00	2	RT	1	
US 20	153+50	65	LT	1	
US 20	1312+00	65	LT	1	
US 20	1315+00	8	RT	1	
EX RAMP AD	1320+00	105	RT	1	
US 20	1329+00	16	RT	1	
I-39	2712+51.71	30	LT	1	
			SUBTOTAL	9	
			GRAND TOTAL	9	

70400100					
TEMPORARY CONCRETE BARRIER					
80% FED / 20% STATE					
ALIGNMENT	STA FROM	LT/RT	STA TO	LT/RT	FOOT
Stage 1					
US 20	117+30	LT	125+50.00	LT	837.5
US 20	120+35.33	RT	125+92.04	RT	562.5
US 20	127+23.73	LT	147+82.04	LT	2,075.0
US 20	127+22.91	LT/RT	136+00.00	RT	887.5
US 20	130+08.16	LT	136+11.06	LT	625.0
US 20	138+50.00	LT/RT	152+33.93	LT/RT	1,387.5
RAMP CA	01+45.13	LT	06+25.54	LT	487.5
US 20	149+24.88	LT	1337+83.02	LT	3,050.0
US 20	1311+90.77	RT	1315+59.61	RT	400.0
US 20	1315+06.15	RT/LT	1326+19.40	RT/LT	1,125.0
RAMP AD	24+37.70	LT	29+95.32	LT	575.0
US 20	1329+51.03	RT	1337+88.77	LT	850.0
Stage 1B					
Stage 2					
US 20	123+09.80	LT	125+12.07	LT/RT	212.5
US 20	127+34.14	RT	1337+77.29	RT	5,250.0
US 20	151+30.90	LT	152+54.51	LT	125.0
Stage 2B					
Winter					
I-39	2727+93.66	RT	2736+92.07	RT	912.5
Stage 3					
I-39	2706+56.02	LT	2712+51.71	LT	600.0
I-39	2726+17.28	RT	2744+20.78	RT	1,825.0
Stage 3B					
I-39	2731+00.33	LT	2752+71.00	LT	2,175.0
Stage 4					
RAMP CB	03+87.09	LT	05+84.97	LT	225.0
RAMP DA	04+12.50	LT	04+70.00	LT	75.0
I-39	2733+14.00	LT	2740+55.77	LT	737.5
Stage 4B					
I-39	2734+11.07	LT	2748+07.98	LT	1,412.5
TEMPORARY CONCRETE BARRIER				SUBTOTAL	26,413
TEMPORARY CONCRETE BARRIER				GRAND TOTAL	26,413

70400125					
PINNING TEMPORARY CONCRETE BARRIER					
80% FED / 20% STATE					
ALIGNMENT	STA FROM	LT/RT	STA TO	LT/RT	EACH
Stage 1					
US 20	117+30.00	LT	125+50.00	LT	193
US 20	126+96.00	LT	132+62.00	LT	130
US 20	126+95.65	LT	147+82.04	LT	495
US 20	138+52.80	RT	152+09.23	RT	320
US 20	149+24.88	LT	1337+83.02	LT	726
US 20	1332+02.00	LT	1337+57.20	LT	132
Stage 1B					
RAMP CB	04+25.00	RT	05+60.00	RT	25
Stage 2					
US 20	150+81.00	LT	152+40.00	LT	36
Stage 3					
NB I-39	12+12.00	RT	22+24.00	RT	237
				SUBTOTAL	2,293
				GRAND TOTAL	2,293

70600251					
IMPACT ATTENUATIORS, TEMPORARY (NON-REDIRECTIVE, NARROW), TEST LEVEL 3					
80% FED / 20% STATE					
ROAD	STA	OFFSET	LT/RT	EACH	REMARKS
Stage 2					
US 20	1316+19.05	8	RT	1	
Stage 2B					
EX RAMP BC	145+50	190	LT	1	
			SUBTOTAL	2	
			GRAND TOTAL	2	

X7040012						
TEMPORARY CONCRETE BARRIER (TO REMIAN PERMANENTLY)						
80% FED / 20% STATE						
ALIGNMENT	STA FROM	LT/RT	STA TO	LT/RT	FOOT	REMARKS
PR RAMP D	410+92.31	RT	414+98.04	LT	412.5	
				SUBTOTAL	413.0	
				GRAND TOTAL	413.0	

MODEL: Default
FILE NAME: pw://benesch-pw.bentley.com:benesch-pw-01/Documents/108006.00/Eng_Docs/CAD Sheets/General/D0264871-SDI-sht-SCH-17.dgn

benesch
Alfred Benesch & Company
35 W. Wacker Drive, Suite 3300
Chicago, Illinois 60601
312.565.0450 Job No. 10800.00

USER NAME = nReynolds	DESIGNED - A.GIBSON	REVISED -	
	DRAWN - J.MAJCHER	REVISED -	
PLOT SCALE = 0.167 ' / In.	CHECKED - J.TARDY	REVISED -	
PLOT DATE = 11/27/2023	DATE - 10/13/2023	REVISED -	

STATE OF ILLINOIS
DEPARTMENT OF TRANSPORTATION

SCHEDULE OF QUANTITIES
MOT

SCALE: N/A | SHEET 20 OF 48 SHEETS | STA. | TO STA.

F.A.* RTE.	SECTION	COUNTY	TOTAL SHEETS	SHEET NO.
*	(5)RS & (5&5HB)RC	WINNEBAGO	1279	68
		CONTRACT NO. 64R71		
	ILLINOIS FED. AID PROJECT			

* FAI ROUTE 39 (I-39) & FAP ROUTE 525 (US 20)

70300221
TEMPORARY PAVEMENT MARKING-LINE 4"-PAINT
80% FED / 20% STATE

ROAD	STA	LT/RT	STA	LT/RT	DESCRIPTION	FACTOR	LENGTH	FOOT
PreStage 1								
RAMP DA	01+90	5.0' LT	10+23	0.0' LT/RT	SOLID WHITE	1	1011	1,011
	03+75	18.0' LT	08+55	16.0' LT	SOLID YELLOW	1	512	512
RAMP AC	11+69	0.0' LT/RT	14+59	4.0' RT	SOLID WHITE	1	291	291
	14+35	20.0' RT	14+59	22.0' RT	SOLID YELLOW	1	25	25
RAMP BD	12+69'	16.0' LT	14+39	22.0' RT	SOLID WHITE	1	173	173
RAMP CB	03+00	8.0' LT	08+71	16.0' LT	SOLID YELLOW	1	589	589
	02+00	0.0' LT/RT	09+09	0.0' LT/RT	SOLID WHITE	1	795	795
RAMP BC	15+58	0.0' LT/RT	26+22	3.5' RT	SOLID WHITE	1	1290	1,290
	12+68	16.00 RT	23+96	10.0' RT	SOLID YELLOW	1	1134	1,134
RAMP AD	21+82	0.0' LT/RT	16+91	0.0' LT/RT	SOLID WHITE	1	498	498
	21+74	16.0' LT	15+00	16.0' LT	SOLID YELLOW	1	665	665
RAMP DB	01+39	2.0' RT	13+80	0.0' LT/RT	SOLID WHITE	1	1533	1,533
	05+47	9.0' RT	13+82	16.0' RT	SOLID YELLOW	1	1507	1,507
HARR/US20	119+27	37.0' LT	1342+59	34.0' LT	SOLID WHITE	1	7287	7,287
HARR/US20	149+53	10.0' RT	1317+14	10.0' RT	SOLID YELLOW	1	2518	2,518
HARR/US20	127+05	53.5' LT	1343+35	22.0' LT	SKIP DASH LINE	0.25	6685	1,671
PreStage 2								
RAMP DA	2+34	11.2' RT	9+61	0.0' LT/RT	SOLID WHITE	1	788	788
	3+78	7.0' LT	9+62	16.0' LT	SOLID YELLOW	1	604	604
RAMP AC	7+15	16.0' LT	13+37	6.0' RT	SOLID WHITE	1	818	818
	8+62	9.0' LT	12+39	7.2' LT	SOLID YELLOW	1	399	399
RAMP BD	13+31	16.4' LT	14+95	17.42' LT	SOLID WHITE	1	164	164
	12+69	16.0' LT	13+31	16.4' LT	SOLID YELLOW	1	64	64
RAMP CB	2+00	0.0' LT/RT	9+09	0.0' LT/RT	SOLID WHITE	1	709	709
	3+00	16.0' LT	8+71	16.0' LT	SOLID YELLOW	1	602	602
RAMP BC	15+52	0.0' LT/RT	24+05	10.6' RT	SOLID WHITE	1	921	921
	13+15	16.0' LT	23+27	7.1' LT	SOLID YELLOW	1	1011	1,011
RAMP AD	15+00	16.0' LT	21+74	16.0' LT	SOLID YELLOW	1	662	662
HARR/US20	114+20	30.4' RT	1343+59	34.0' LT	SOLID WHITE	1	9751	9,751
HARR/US20	119+05	10.7' LT	1342+35	19.6' LT	SOLID YELLOW	1	6958	6,958
STAGE 1A-1								
MALL	297+69	15' RT	299+50.00	15' RT	DOUBLE YELLOW	2	181	362
MALL	300+71	15' RT	303+36.00	15' RT	DOUBLE YELLOW	2	265	530
MALL	304+20.00	16' RT	309+89.00	20' RT	DOUBLE YELLOW	2	581	1,162
STAGE 1A-3								
MALL	297+70.00	16' LT	299+59.00	16' LT	DOUBLE YELLOW	2	189	378
MALL	300+61.00	15' LT	303+37.00	15' LT	DOUBLE YELLOW	2	276	552
MALL	304+20.00	16' LT	309+89.00	20' LT	DOUBLE YELLOW	2	581	1,162
STAGE 1A-4								
MALL	300+61.00	16' LT	303+37.00	16' LT	DOUBLE YELLOW	2	311	622
							TOTAL	49,719

70300100
SHORT TERM PAVEMENT MARKING
80% FED / 20% STATE

ROAD	STA	LT/RT	STA	LT/RT	DESCRIPTION	FACTOR	LENGTH	FOOT
STAGE 1A-4								
MALL	297+43.00	LT/RT	298+50.00	LT/RT	RESURFACING	1	300	300
							TOTAL	300

70300251
TEMPORARY PAVEMENT MARKING - LINE 8 -PAINT
80% FED / 20% STATE

ROAD	STA	LT/RT	STA	LT/RT	DESCRIPTION	FACTOR	LENGTH	FOOT
Stage 1A-1								
MALL	300+67.00	RT	301+20.00	RT	SOLID WHITE	1	53	53
MALL	301+20.00	RT	302+63.00	RT	SKIP DASH	0.33	143	47
MALL	302+63.00	RT	303+12.00	RT	SOLID WHITE	1	49	49
STAGE 1A-2								
MALL	298+61.00	0	299+54.00	70' LT	SOLID WHITE	1	160	160
MALL	300+49.00	50' LT	301+69.00	2' RT	SOLID WHITE	1	132	132
MALL	300+60.00	64' LT	302+09.00	2' RT	SOLID WHITE	1	164	164
MALL	300+71.00	2' RT	301+69.00	2' RT	SOLID WHITE	1	98	98
MALL	302+09.00	2' RT	303+23.00	2' RT	SOLID WHITE	1	114	114
STAGE 1A-3								
MALL	300+72.00	27' LT	301+00.00	27' LT	SOLID WHITE	1	28	28
MALL	301+00.00	27' LT	302+70.00	27' LT	SKIP DASH	0.33	170	56
MALL	302+70.00	27' LT	303+37.00	27' LT	SOLID WHITE	1	67	67
STAGE 1A-4								
MALL	298+49.00	26' RT	299+53.00	92' RT	SOLID WHITE	1	130	130
MALL	299+00.00	0	299+54.00	64' RT	SOLID WHITE	1	84	84
MALL	299+00.00	0	299+59.00	0	SOLID WHITE	1	59	59
MALL	300+77.00	27' RT	303+37.00	27' RT	SOLID WHITE	1	180	180
							TOTAL	1,421

70300281
TEMPORARY PAVEMENT MARKING - LINE 24" - PAINT
80% FED / 20% STATE

ROAD	STA	LT/RT	STA	LT/RT	DESCRIPTION	FACTOR	LENGTH	FOOT
PreStage 1								
HARR/US 20	125+77.68	RT			STOP BAR	1	33	33
HARR/US 20	127+01	LT			STOP BAR	1	38	38
HARR/US 20	1339+12	LT			STOP BAR	1	22	22
STAGE 1A-1								
MALL	300+71.00	2' RT		15' RT	STOP BAR	1	13	13
MALL	297+43.00	17' RT	297+56.00	17' RT	STOP BAR	1	13	13
STAGE 1A-2								
MALL	300+48.00	50' LT	300+60.00	64' LT	STOP BAR	1	18	18
MALL	303+32.00	15' RT	303+32.00	30' RT	STOP BAR	1	15	15
STAGE 1A-3								
MALL	300+72.00	17' LT	300+72.00	28' LT	STOP BAR	1	11	11
							TOTAL	163

70303100
TEMPORARY PAVEMENT MARKING LETTERS AND SYMBOLS - MODIFIED URETHANE
80% FED / 20% STATE

ROAD	STA	LT/RT	STA	LT/RT	# COATS	DESCRIPTION	NUMBER	AREA	SQUARE FOOT
Stage 1									
HARR/US20	124+59	LT	125+58	LT	1	COMBINATION ARROW	4	27	106
HARR/US20	127+12	LT	128+16	LT	1	COMBINATION ARROW	4	27	106
HARR/US20	148+11	LT	148+13	LT	1	TURN ARROW	2	16	31
HARR/US20	148+11	LT	148+13	LT	1	ONLY	2	21	42
HARR/US20	1336+81	LT	1337+90	LT	1	COMBINATION ARROW	4	27	106
HARR/US20	1339+98	LT	1341+07	LT	1	COMBINATION ARROW	4	27	106
Stage 1B									
HARR/US20	124+56	RT	125+67	RT	1	COMBINATION ARROW	4	27	106
HARR/US20	127+25	LT	128+29	LT	1	COMBINATION ARROW	4	27	106
HARR/US20	148+11	LT	148+13	LT	1	TURN ARROW	2	16	31
HARR/US20	148+11	LT	148+13	LT	1	ONLY	2	21	42
Stage 2									
HARR/US20	124+58	RT	125+66	RT	1	COMBINATION ARROW	4	27	106
HARR/US20	127+24	RT	128+27	RT	1	COMBINATION ARROW	4	27	106
HARR/US20	1316+85	LT	1317+16	LT	1	TURN ARROW	3	16	47
HARR/US20	1316+85	LT	1317+16	LT	1	ONLY	3	21	62
HARR/US20	1336+81	LT	1337+90	LT	1	COMBINATION ARROW	4	27	106
HARR/US20	1339+98	LT	1341+07	LT	1	COMBINATION ARROW	4	27	106
Stage 2A-1									
HARR/US20	125+87	RT	126+70	LT	1	TURN ARROW	3	16	47
HARR/US20	125+87	RT	128+22	LT	1	STRAIGHT ARROW	3	11	34
HARR/US20	125+87	RT	126+70	LT	1	COMBINATION ARROW	4	27	106
HARR/US20	125+87	RT	128+22	LT	1	ONLY	2	21	42
Stage 2A-2									
HARR/US20	125+87	RT	126+70	LT	1	TURN ARROW	4	16	62
HARR/US20	125+87	RT	126+70	LT	1	STRAIGHT ARROW	3	11	34
HARR/US20	125+87	RT	126+70	LT	1	COMBINATION ARROW	7	27	186
HARR/US20	125+87	RT	126+70	LT	1	DOUBLE ARROW	1	15	15
Stage 2B									
HARR/US20	124+59	LT	125+58	LT	1	COMBINATION ARROW	4	27	106
HARR/US20	125+87	RT	126+70	LT	1	TURN ARROW	9	16	140
HARR/US20	125+87	RT	126+70	LT	1	STRAIGHT ARROW	5	11	56
HARR/US20	125+87	RT	126+70	LT	1	COMBINATION ARROW	3	27	80
HARR/US20	127+26	RT	128+22	RT	1	STRAIGHT ARROW	2	11	22
HARR/US20	127+26	RT	128+22	RT	1	ONLY	2	21	42
HARR/US20	127+26	RT	128+22	RT	1	TURN ARROW	3	16	47
HARR/US20	127+12	LT	128+16	LT	1	COMBINATION ARROW	2	27	53
HARR/US20	1317+42	LT	1317+91	LT	1	TURN ARROW	2	16	31
HARR/US20	1317+42	LT	1317+91	LT	1	ONLY	2	21	42
Winter									
HARR/US20	122+15	RT	125+55	RT	1	TURN ARROW	7	16	109
HARR/US20	127+22	LT	128+80	LT	1	TURN ARROW	4	16	62
HARR/US20	1335+90	RT	1337+90	RT	1	TURN ARROW	7	16	109

70303100
TEMPORARY PAVEMENT MARKING LETTERS AND SYMBOLS - MODIFIED URETHANE
80% FED / 20% STATE

ROAD	STA	LT/RT	STA	LT/RT	# COATS	DESCRIPTION	NUMBER	AREA	SQUARE FOOT
Stage 3									
HARR/US20	144+57	RT	147+16	RT	1	STRAIGHT ARROW	2	11	22
HARR/US20	144+57	RT	147+16	RT	1	COMBINATION ARROW	2	27	53
HARR/US20	147+56	LT	148+58	LT	1	STRAIGHT ARROW	2	11	22
HARR/US20	147+56	LT	148+58	LT	1	ONLY	2	21	42
HARR/US20	149+00	RT	151+85	RT	1	STRAIGHT ARROW	2	11	22
HARR/US20	149+00	RT	151+85	RT	1	COMBINATION ARROW	2	27	53
HARR/US20	1312+60	LT	1315+55	LT	1	STRAIGHT ARROW	2	11	22
HARR/US20	1312+60	LT	1315+55	LT	1	COMBINATION ARROW	2	27	53
HARR/US20	1316+40	RT	1314+88	RT	1	STRAIGHT ARROW	2	11	22
HARR/US20	1316+40	RT	1314+88	RT	1	ONLY	2	21	42
HARR/US20	1317+20	LT	1320+28	LT	1	STRAIGHT ARROW	2	11	22
HARR/US20	1317+20	LT	1320+28	LT	1	COMBINATION ARROW	2	27	53
Stage 4									
HARR/US20	124+59	RT	125+55	RT	1	TURN ARROW	2	16	31
HARR/US20	144+29	RT	147+16	RT	1	STRAIGHT ARROW	3	11	34
HARR/US20	144+29	RT	147+16	RT	1	COMBINATION ARROW	1	27	27
HARR/US20	144+29	RT	147+16	RT	1	TURN ARROW	1	16	16
HARR/US20	149+00	RT	151+85	RT	1	TURN ARROW	3	16	47
HARR/US20	1312+01	LT	1315+55	LT	1	STRAIGHT ARROW	4	11	45
HARR/US20	1312+01	LT	1315+55	LT	1	TURN ARROW	3	16	47
HARR/US20	1312+01	LT	1315+55	LT	1	ONLY	2	21	42
HARR/US20	1317+20	LT	1320+83	LT	1	STRAIGHT ARROW	2	11	22
HARR/US20	1317+20	LT	1320+83	LT	1	TURN ARROW	3	16	47
HARR/US20	1336+18	RT	1337+36	RT	1	STRAIGHT ARROW	2	11	22
HARR/US20	1336+18	RT	1337+36	RT	1	COMBINATION ARROW	2	27	53
HARR/US20	1336+18	RT	1337+36	RT	1	TURN ARROW	2	16	31
HARR/US20	1339+40	LT	1341+04	LT	1	STRAIGHT ARROW	2	11	22
HARR/US20	1339+40	LT	1341+04	LT	1	COMBINATION ARROW	2	27	53
HARR/US20	1339+40	LT	1341+04	LT	1	TURN ARROW	2	16	31
Stage 4B									
HARR/US20	122+15	RT	125+55	RT	1	TURN ARROW	3	16	47
HARR/US20	127+22	LT	128+80	LT	1	TURN ARROW	6	16	94
HARR/US20	144+29	RT	147+16	RT	1	STRAIGHT ARROW	4	11	45
HARR/US20	144+29	RT	147+16	RT	1	TURN ARROW	2	16	31
HARR/US20	149+00	RT	151+85	RT	1	STRAIGHT ARROW	6	11	67
HARR/US20	149+00	RT	151+85	RT	1	TURN ARROW	3	16	47
HARR/US20	1312+01	LT	1315+55	LT	1	STRAIGHT ARROW	4	11	45
HARR/US20	1312+01	LT	1315+55	LT	1	TURN ARROW	2	16	31
HARR/US20	1317+20	LT	1320+83	LT	1	STRAIGHT ARROW	6	11	67
HARR/US20	1317+20	LT	1320+83	LT	1	TURN ARROW	3	16	47
HARR/US20	1334+35	RT	1337+50	RT	1	TURN ARROW	6	16	94
								SUBTOTAL	4,359
								GRAND TOTAL	4,359

MODEL: Default
FILE NAME: pw://benesch-pw.bentley.com:benesch-pw-03/Documents/10800s/10800,00/Eng_Docs/CAD_Sheets/General/D264R71-DDI-4th-SCH-18.dgn

benesch
Alfred Benesch & Company
35 W. Wacker Drive, Suite 3300
Chicago, Illinois 60601
312-565-0450 Job No. 10800.00

USER NAME = nReynolds	DESIGNED - A.GIBSON	REVISED -	
	DRAWN - J.MAJCHER	REVISED -	
PLOT SCALE = 0.167 ' / in.	CHECKED - J.TARDY	REVISED -	
PLOT DATE = 10/26/2023	DATE - 10/13/2023	REVISED -	

STATE OF ILLINOIS
DEPARTMENT OF TRANSPORTATION

SCHEDULE OF QUANTITIES
MOT

SCALE: N/A | SHEET 21 OF 48 SHEETS | STA. | TO STA.

F.A.* RTE.	SECTION	COUNTY	TOTAL SHEETS	SHEET NO.
*	(5)RS & (5&5HB)RC	WINNEBAGO	1279	69
		CONTRACT NO. 64R71		
	ILLINOIS FED. AID PROJECT			

* FAI ROUTE 39 (I-39) & FAP ROUTE 525 (US 20)

70600332

IMPACT ATTENUATORS, RELOCATE (FULLY REDIRECTIVE, NARROW), TEST LEVEL 3

80% FED / 20% STATE

ROAD	STA	OFFSET	LT/RT	EACH	REMARKS
Stage 1B					
US 20	132+00	26.00	LT	1	
Stage 2					
US 20	123+00	22.00	LT	1	
US 20	125+50	32.00	LT	1	
US 20	127+00	32.00	LT	1	
US 20	134+50	4.00	LT	1	
EX RAMP BC	140+00	45.00	LT	1	
EX RAMP BC	145+00	117.00	LT	1	
US 20	150+00	7.50	RT	1	
EX RAMP AC	1317+00	88.00	LT	1	
US 20	1338+00	0.00	RT	1	
Stage 2B					
US 20	153+00	6.00	RT	1	
US 20	1330+00	2.00	LT	1	
US 20	1330+00	16.00	LT	1	
Stage 3					
I-39	2727+80.64	6.50	RT	1	
Stage 4					
PR RAMP C	3+10.14	6.30	LT	1	
			SUBTOTAL	15	
			GRAND TOTAL	15	

70600350

IMPACT ATTENUATORS, RELOCATE (NON-REDIRECTIVE), TEST LEVEL 3

80% FED / 20% STATE

ROAD	STA	OFFSET	LT/RT	EACH	REMARKS
Stage 1B					
US 20	130+50	16.00	RT	1	
US 20	1314+50	77.00	RT	1	
US 20	1322+03.04	33.20	RT	1	
Stage 2					
EX RAMP DA	150+00	22.00	LT	1	
US 20	152+00	65.00	RT	1	
US 20	153+00	65.00	RT	1	
Stage 3					
US 20	147+00	0	RT	1	
US 20	149+00	0	RT	1	
US 20	1315+00	0	RT	1	
US 20	1317+50	0	RT	1	
I-39	2725+27.87	51	RT	1	
Stage 3B					
I-39	2727+91.09	22	RT	1	
I-39	2747+20.85	1	LT	1	
Stage 4					
EX RAMP AD	1316+50	195.00	RT	1	
Stage 4B					
I-39	2728+49.49	21	RT	1	
I-39	2736+96.44	13	RT	1	
I-39	2747+95.72	21	LT	1	
			SUBTOTAL	17	
			GRAND TOTAL	17	

70107025

CHANGEABLE MESSAGE SIGN

80% FED / 20% STATE

ROAD	DESCRIPTION	STAGE/ACTIVITY	CAL DA	REMARKS
HARRISON EB	TWO WEEKS ADVANCE	PRESTAGE	14	
HARRISON EB	TWO WEEKS ADVANCE	1	14	
HARRISON EB	TWO WEEKS ADVANCE	2	14	
HARRISON EB	TWO WEEKS ADVANCE	3	14	
HARRISON EB	TWO WEEKS ADVANCE	4	14	
US 20 WB	TWO WEEKS ADVANCE	PRESTAGE	14	
US 20 WB	TWO WEEKS ADVANCE	1	14	
US 20 WB	TWO WEEKS ADVANCE	2	14	
US 20 WB	TWO WEEKS ADVANCE	3	14	
US 20 WB	TWO WEEKS ADVANCE	4	14	
I-39 NB	TWO WEEKS ADVANCE	3	14	
I-39 NB	TWO WEEKS ADVANCE	3B	14	
I-39 SB	TWO WEEKS ADVANCE	3B	14	
I-39 SB	TWO WEEKS ADVANCE	4	14	
HARRISON EB	TEMP RAMP		14	
US 20 WB	TEMP RAMP		14	
I-39	SIGN TRUSS	STA 2736+00	14	
I-39	SIGN TRUSS	STA 2739+30	14	
HARRISON	SIGN TRUSS	STA 143+50	14	
HARRISON	SIGN TRUSS	STA 3023+00	14	
SOUTH MALL DR			14	
		SUBTOTAL	294	
		GRAND TOTAL	294	

78300200

RAISED REFLECTIVE PAVEMENT MARKER REMOVAL

80% FED / 20% STATE

ROAD	STA FROM	STA TO	DIRECTION	DESCRIPTION	EACH	REMARKS
Stage 1						
US 20	116+00.00	123+50.00	EB	3 LANES AT 20' C-C	113	
US 20	1339+70.00	1348+00.00	EB	3 LANES AT 5' C-C	498	
Stage 2						
US 20	1339+25.00	1343+80.00	WB	3 LANES AT 5' C-C	273	
Stage 3						
I-39	2726+00.00	2729+70.00	NB	3 LANES AT 5' C-C	222	
Stage 4						
I-39	2739+10.00	2742+90.00	SB	3 LANES AT 5' C-C	228	
Stage 4B						
I-39	2745+21.00	2754+22.00	SB	3 LANES AT 5' C-C	541	
				SUBTOTAL	1,875	
				GRAND TOTAL	1,875	

78100200

TEMPORARY RAISED REFLECTIVE PAVEMENT MARKER

80% FED / 20% STATE

ROAD	STA FROM	STA TO	DIRECTION	DESCRIPTION	EACH	REMARKS
Stage 1						
US 20	116+00.00	123+50.00	EB	3 LANES AT 20' C-C	113	
US 20	1339+70.00	1348+00.00	EB	3 LANES AT 5' C-C	498	
Stage 2						
US 20	1339+25.00	1343+80.00	WB	3 LANES AT 5' C-C	273	
Stage 3						
I-39	2726+00.00	2729+70.00	NB	3 LANES AT 5' C-C	222	
Stage 4						
I-39	2739+10.00	2742+90.00	SB	3 LANES AT 5' C-C	228	
Stage 4B						
I-39	2745+21.00	2754+22.00	SB	3 LANES AT 5' C-C	541	
				SUBTOTAL	1,875	
				GRAND TOTAL	1,875	

70600352

IMPACT ATTENUATORS, RELOCATE (NON- REDIRECTIVE,NARROW), TEST LEVEL 3

80% FED / 20% STATE

ROAD	STA	OFFSET	LT/RT	EACH	REMARKS
Stage 2B					
US 20	1317+13.63	10.0	RT	1	
Stage 4					
US 20	148+25	75.0	LT	1	
			SUBTOTAL	2	
			GRAND TOTAL	2	

X6350206

LINEAR DELINEATOR PANELS, 6 INCH

80% FED / 20% STATE

ROAD	STA	STA	DIRECTION	LT/RT	LENGTH (FT)	EACH	REMARKS
STAGE 1							
HAR AVE	123+50.00	125+60.00	EB	LT	210	34	
HAR AVE	123+50.00	125+60.00	WB	LT	210	34	
HAR AVE	126+70.00	128+70.00	EB	LT	200	32	
HAR AVE	126+70.00	128+70.00	WB	LT	200	32	
HAR AVE	148+00.00	150+00.00	NORTH SIDE	LT	200	32	
STAGE 3							
PR I-39	2727+80.00	2731+00.00	NB	LT	320	51	
					SUBTOTAL	214	
					GRAND TOTAL	214	

X7060334

IMPACT ATTENUATORS, TEMPORARY (FULLY REDIRECTIVE, RESETTABLE) TEST LEVEL 3 (TO REMAIN PERMANENTLY)

80% FED / 20% STATE

ROAD	STA	OFFSET	LT/RT	EACH	REMARKS
PR NB I-39	10+00.00	13.5	LT	1	
			SUBTOTAL	1	
			GRAND TOTAL	1	

X7060336

IMPACT ATTENUATORS, TEMPORARY (FULLY REDIRECTIVE, NARROW) TEST LEVEL 3 (TO REMAIN PERMANENTLY)

80% FED / 20% STATE

ROAD	STA	OFFSET	LT/RT	EACH	REMARKS
PR RAMP D	410+92.31	2.6	RT	1	
			SUBTOTAL	1	
			GRAND TOTAL	1	

benesch
Alfred Benesch & Company
35 W. Wacker Drive, Suite 3300
Chicago, Illinois 60601
312-565-0450 Job No. 10800.00

MODEL: Default
FILE NAME: pw://benesch-pw.bentley.com:benesch-pw-31/Documents/10800s/10800.00/Eng. Docs/CAD Sheets/General/MD64R71-DDI-ahl-SCH-18A.dgn

USER NAME = nReynolds	DESIGNED - A.GIBSON	REVISED -	
	DRAWN - J.MAJCHER	REVISED -	
PLOT SCALE = 0.167 ' / in.	CHECKED - J.TARDY	REVISED -	
PLOT DATE = 10/26/2023	DATE - 10/13/2023	REVISED -	

STATE OF ILLINOIS
DEPARTMENT OF TRANSPORTATION

SCHEDULE OF QUANTITIES
MOT

SCALE: N/A | SHEET 22 OF 48 SHEETS | STA. | TO STA.

F.A.* RTE.	SECTION	COUNTY	TOTAL SHEETS	SHEET NO.
*	(5)RS & (5&5HB)RC	WINNEBAGO	1279	70
		CONTRACT NO. 64R71		
	ILLINOIS	FED. AID PROJECT		

* FAI ROUTE 39 (I-39) & FAP ROUTE 525 (US 20)

78300201 PAVEMENT MARKING REMOVAL - GRINDING 80% FED / 20% STATE									
ROAD	STA	LT/RT	STA	LT/RT	LINE TYPE (IN.)	DESCRIPTION	FACTOR	LENGTH	SQ FT
PreStage 1									
RAMP DA	01+90	5.0' LT	10+23	0.0' LT/RT	4	SOLID WHITE	1	1011	337
RAMP DA	03+75	18.0' LT	08+55	16.0' LT	4	SOLID YELLOW	1	512	171
RAMP AC	11+69	0.0' LT/RT	14+59	4.0' RT	4	SOLID WHITE	1	291	97
RAMP AC	14+35	20.0' RT	14+59	22.0' RT	4	SOLID YELLOW	1	25	8
RAMP BD	12+69'	16.0' LT	14+39	22.0' RT	4	SOLID WHITE	1	173	58
RAMP CB	03+00	8.0' LT	08+71	16.0' LT	4	SOLID YELLOW	1	589	196
RAMP CB	02+00	0.0' LT/RT	09+09	0.0' LT/RT	4	SOLID WHITE	1	795	265
RAMP BC	15+58	0.0' LT/RT	26+22	3.5' RT	4	SOLID WHITE	1	1290	430
RAMP BC	12+68	16.00 RT	23+96	10.0' RT	4	SOLID YELLOW	1	1134	378
RAMP AD	21+82	0.0' LT/RT	16+91	0.0' LT/RT	4	SOLID WHITE	1	498	166
RAMP AD	21+74	16.0' LT	15+00	16.0' LT	4	SOLID YELLOW	1	665	222
RAMP DB	01+39	2.0' RT	13+80	0.0' LT/RT	4	SOLID WHITE	1	1533	511
RAMP DB	05+47	9.0' RT	13+82	16.0' RT	4	SOLID YELLOW	1	1507	502
HARR/US20	119+27	37.0' LT	1342+59	34.0' LT	4	SOLID WHITE	1	7287	2429
HARR/US20	149+53	10.0' RT	1317+14	10.0' RT	4	SOLID YELLOW	1	2518	839
HARR/US20	127+05	53.5' LT	1343+35	22.0' LT	4	SKIP DASH LINE	0.25	6685	557
PreStage 2									
RAMP DA	2+34	11.2' RT	9+61	0.0' LT/RT	4	SOLID WHITE	1	788	263
RAMP DA	3+78	7.0' LT	9+62	16.0' LT	4	SOLID YELLOW	1	604	201
RAMP AC	7+15	16.0' LT	13+37	6.0' RT	4	SOLID WHITE	1	818	273
RAMP AC	8+62	9.0' LT	12+39	7.2' LT	4	SOLID YELLOW	1	399	133
RAMP BD	13+31	16.4' LT	14+95	17.42' LT	4	SOLID WHITE	1	164	55
RAMP BD	12+69	16.0' LT	13+31	16.4' LT	4	SOLID YELLOW	1	64	21
RAMP CB	2+00	0.0' LT/RT	9+09	0.0' LT/RT	4	SOLID WHITE	1	709	236
RAMP CB	3+00	16.0' LT	8+71	16.0' LT	4	SOLID YELLOW	1	602	201
RAMP BC	15+52	0.0' LT/RT	24+05	10.6' RT	4	SOLID WHITE	1	921	307
RAMP BC	13+15	16.0' LT	23+27	7.1' LT	4	SOLID YELLOW	1	1011	337
RAMP AD	15+00	16.0' LT	21+74	16.0' LT	4	SOLID YELLOW	1	662	221
HARR/US20	114+20	30.4' RT	1343+59	34.0' LT	4	SOLID WHITE	1	9751	3250
HARR/US20	119+05	10.7' LT	1342+35	19.6' LT	4	SOLID YELLOW	1	6958	2319
Stage 1									
RAMP DA	2+34	11.2' RT	7+16	0.0' LT/RT	4	SOLID WHITE	1	461	154
RAMP DA	3+05	6.5' LT	7+25	16.0' LT	4	SOLID YELLOW	1	437	146
RAMP AC	10+66	0.0' LT/RT	13+32	5.9' RT	4	SOLID WHITE	1	264	88
RAMP AC	10+66	16.0' LT	12+70	11.6' LT	4	SOLID YELLOW	1	212	71
RAMP CB	2+45	34.2' LT	12+32	0.0' LT/RT	4	SOLID WHITE	1	1164	388
RAMP CB	4+21	25.8' LT	5+87	16.0' LT	4	SOLID YELLOW	1	180	60
RAMP BC	20+50	0.0' LT/RT	24+05	10.61' RT	4	SOLID WHITE	1	411	137
RAMP BC	19+43	16.0' LT	21+10	254.9' LT	4	SOLID WHITE	1	361	120
RAMP BC	18+39	16.0' LT	20+90	247.90' LT	4	SOLID YELLOW	1	389	130
RAMP BC	20+50	16.0 LT	23+26	7.1' LT	4	SOLID YELLOW	1	286	95
RAMP CA	12+25	0.0' LT/RT	00+00	390.3' LT	4	SOLID WHITE	1	1882	627
RAMP CA	0+44	11.8' LT	11+48	16.0' LT	4	SOLID YELLOW	1	1110	370
RAMP AD	18+25	0.0' LT/RT	35+37	39.9' LT	4	SOLID WHITE	1	2241	747
RAMP AD	18+25	16.0' LT	30+77	16.3' LT	4	SOLID YELLOW	1	1258	419
HARR/US20	115+61	29.0' RT	1343+59	34.0' LT	4	SOLID WHITE	1	12768	4256
HARR/US20	116+00	5.5' RT	1343+74	10.0' LT	4	SOLID YELLOW	1	801	267
HARR/US20	116+28	2.9' RT	1338+05	24.5' LT	4	DOUBLE YELLOW	2	5624	3749
I-39	2721+25	44.0' LT	2726+20	61.7' LT	4	SOLID WHITE	1	490	163
Stage 1B									
RAMP CA	6+80	47.0' LT	10+53	0.0' LT/RT	4	SOLID WHITE	1	443	148
RAMP CA	7+10	61.0' LT	10+53	16.0' LT	4	SOLID YELLOW	1	477	159
RAMP CB	00+86	0.0' LT/RT	11+06	0.0' LT/RT	4	SOLID WHITE	1	996	332
RAMP CB	01+50	1.0' LT	11+04	16.0' LT	4	SOLID YELLOW	1	949	316
RAMP AD	21+25	0.0' LT/RT	25+30	38.3' LT	4	SOLID WHITE	1	413	138
RAMP AD	21+25	16.0' LT	24+92	51.3' LT	4	SOLID YELLOW	1	381	127
HARR/US20	130+80	3.1' RT	134+18	2.5' LT	4	SOLID WHITE	1	304	101
HARR/US20	128+46	2.6' RT	132+58	24.3' LT	4	SOLID YELLOW	1	406	135
I-39	1308+03	44.0' LT	1310+81	61.7' LT	4	SOLID WHITE	1	213	71
I-39	1310+81	59.0' LT	2726+20	61.7' LT	4	SOLID WHITE	1	249	83
Stage 2									
HARR/US20	126+77	58.0' RT	142+69	69.0' RT	4	SOLID WHITE	1	1407	469
HARR/US20	116+38	6.0' RT	117+24	7.0' RT	4	SOLID YELLOW	1	115	38
HARR/US20	117+24	7.0' RT	122+97	19.0' RT	4	SOLID YELLOW	1	1138	379
RAMP CB	1+30	13.5 RT	6+55	0.0' LT/RT	4	SOLID WHITE	1	513	171
RAMP CB	4+25	1.0' RT	6+55	16.0' LT	4	SOLID YELLOW	1	221	74
RAMP DB	7+20	29.0' LT	8+50	15.7' LT/RT	4	SOLID WHITE	1	155	52
RAMP DB	7+20	45.0' LT	12+67	16.0' LT	4	SOLID YELLOW	1	556	185
RAMP DA	0+25	60.0' LT	4+27	9.9' RT	4	SOLID WHITE	1	413	138
RAMP AC	8+80	0.0' LT/RT	11+40	131.3' LT	4	SOLID YELLOW	1	522	174

78300201 PAVEMENT MARKING REMOVAL - GRINDING 80% FED / 20% STATE									
ROAD	STA	LT/RT	STA	LT/RT	LINE TYPE (IN.)	DESCRIPTION	FACTOR	LENGTH	SQ FT
Stage 2B									
HARR/US20	126+77	58.0' RT	142+69	69.0' RT	4	SOLID WHITE	1	1407	469
HARR/US20	116+38	6.0' RT	117+24	7.0' RT	4	SOLID YELLOW	1	115	38
HARR/US20	117+24	7.0' RT	122+97	19.0' RT	4	SOLID YELLOW	1	1138	379
RAMP CB	1+30	13.5 RT	6+55	0.0' LT/RT	4	SOLID WHITE	1	513	171
RAMP CB	4+25	1.0' RT	6+55	16.0' LT	4	SOLID YELLOW	1	221	74
RAMP DB	7+20	29.0' LT	8+50	15.7' LT/RT	4	SOLID WHITE	1	155	52
RAMP DB	7+20	45.0' LT	12+67	16.0' LT	4	SOLID YELLOW	1	556	185
RAMP DA	0+25	60.0' LT	4+27	9.9' RT	4	SOLID WHITE	1	413	138
RAMP AC	8+80	0.0' LT/RT	11+40	131.3' LT	4	SOLID YELLOW	1	812	271
Stage 3									
RAMP BC	19+44	17.0' LT	21+15	221.0' LT	4	SOLID WHITE	1	269	90
RAMP BC	18+44	16.0' LT	21+00	200.0' LT	4	SOLID YELLOW	1	283	94
RAMP CB	4+66	102.4' LT	5+94	14.8' LT	4	SOLID WHITE	1	227	76
RAMP CB	4+89	132.1' LT	6+64	16.0' LT	4	SOLID YELLOW	1	219	73
I-39	2730+49	10.9	2747+89	217.6	4	SOLID WHITE	1	1570	523
RAMP AD	19+58	16.0' LT	21+53	387.4' LT	4	SOLID WHITE	1	710	237
RAMP AD	19+00	18.9' LT	21+45	343.2' LT	4	SOLID YELLOW	1	512	171
RAMP DA	5+00	67.0' LT	8+00	17.9' LT	4	SOLID YELLOW	1	273	91
Stage 3B									
I-39	1303+91	36.8' LT	1308+35	41.0' LT	4	SOLID WHITE	1	475	158
I-39	1314+99	51.7' LT	1319+95	48.1' LT	4	SOLID WHITE	1	639	213
Stage 4									
I-39	303+00	11.0' RT	307+00	23.0' RT	4	SOLID WHITE	1	410	137
Stage 4B									
I-39	412+00	3.9' LT	416+33	18.2' LT	4	SOLID WHITE	1	434	145
								SUBTOTAL	34,046
								GRAND TOTAL	34,046

MODEL: Default
FILE NAME: pw://benesch-pw.bentley.com:benesch-pw-01/Documents/10800s/10800/10800.00/Eng_Docs/CAD_Sheets/General/D26R71-DDI-4th-SCH-188.dgn

benesch
Alfred Benesch & Company
35 W. Wacker Drive, Suite 3300
Chicago, Illinois 60601
312-565-0150 Job No. 10800.00

USER NAME = nReynolds	DESIGNED - A.GIBSON	REVISED -	
	DRAWN - J.MAJCHER	REVISED -	
PLOT SCALE = 0.167 ' / in.	CHECKED - J.TARDY	REVISED -	
PLOT DATE = 10/26/2023	DATE - 10/13/2023	REVISED -	

STATE OF ILLINOIS
DEPARTMENT OF TRANSPORTATION

SCHEDULE OF QUANTITIES
MOT

SCALE: N/A | SHEET 23 OF 48 SHEETS | STA. | TO STA.

F.A.* RTE.	SECTION	COUNTY	TOTAL SHEETS	SHEET NO.
*	(5)RS & (5&5HB)RC	WINNEBAGO	1279	71
		CONTRACT NO. 64R71		
	ILLINOIS	FED. AID PROJECT		

* FAI ROUTE 39 (I-39) & FAP ROUTE 525 (US 20)

TEMPORARY SIGNING										
80% FED / 20% STATE										
							72000300	72200100	X7200057	
DESCRIPTION	ALIGNMENT	STATION	OFFSET	PANEL WIDTH	PANEL HEIGHT	MOUNTING TYPE	SIGN PANEL - TYPE 3*	DEMOUNTABLE LEGEND CHARACTERS AND ARROWS	TEMPORARY SIGN PANEL OVERLAY	REMARKS
				FOOT	FOOT		SQFT	EACH	SQ FT	
STAGE 1										
OVERLAY	PR CL I39	2739+53.21	LT	8	2.83	OH			22.67	CLOSED
OVERLAY	PR CL I39	2739+53.22		8	2	OH			16.00	CLOSED
SIGN PANEL	PR CL I39	2739+53.21	LT	11.33	3	OH	34.0	4		US 20 EAST
STAGE 3										
OVERLAY	PR CL HARRISION AVE	143+50	RT	3	3	OH		1	9.00	ARROW
COVER	PR CL HARRISION AVE	143+50	RT	3	3	OH			9.00	COVER FOR ARROW
COVER	PR CL HARRISION AVE	143+50	RT	3	1.5	OH			4.50	COVER FOR "LEFT"
OVERLAY	PR CL HARRISION AVE	152+25	LT	3	3	OH		1	9.00	ARROW
COVER	PR CL HARRISION AVE	152+25	LT	3	3	OH			9.00	COVER FOR ARROW
COVER	PR CL HARRISION AVE	152+25	LT	3	1.5	OH			4.50	COVER FOR "LEFT"
OVERLAY	PR CL HARRISION AVE	1312+25	RT	3	3	OH		1	9.00	ARROW
COVER	PR CL HARRISION AVE	1312+25	RT	3	3	OH			9.00	COVER FOR ARROW
COVER	PR CL HARRISION AVE	1312+25	RT	3	1.5	OH			4.50	COVER FOR "LEFT"
OVERLAY	PR CL HARRISION AVE	1322+00	LT	3	3	OH		1	9.00	ARROW
COVER	PR CL HARRISION AVE	1322+00	LT	3	3	OH			9.00	COVER FOR ARROW
COVER	PR CL HARRISION AVE	1322+00	LT	3	1.5	OH			4.50	COVER FOR "LEFT"
OVERLAY	PR CL I39	2739+41.39	LT	8	2	OH		6	16.00	CLOSED
OVERLAY	PR CL I39	2739+41.40	LT	5	2	OH		3	10.00	121
SIGN PANEL	PR CL I39	2739+41.41	LT	11.333	3	OH	34.0	4		US 20 EAST
OVERLAY	PR CL I39	2741+52.82	RT	9	2.5	OH		1	22.50	ARROW
STAGE 3B										
OVERLAY	PR CL I39	2738+27.25	RT	14.5	2.5	OH		1	36.25	ARROW
						TOTAL	68	23	213	
*ADDITIONAL QUANTITY LOCATED IN PROPSED SIGNING SCHEDULES										

MODEL: Default
FILE NAME: pw:\\benesch-pw.bentley.com:benesch-pw-01\Documents\10800s\10800\00\Eng_Docs\CAD_Sheets\General\D64R71-D01-sht-SCH-18f.dgn

benesch
Allied Benesch & Company
35 W. Wacker Drive, Suite 3300
Chicago, Illinois 60601
312-565-0450 Job No. 10800.00

USER NAME = nReynolds	DESIGNED - A.GIBSON	REVISED -
	DRAWN - J.MAJCHER	REVISED -
PLOT SCALE = 0.167 ' / In.	CHECKED - J.TARDY	REVISED -
PLOT DATE = 10/26/2023	DATE - 10/13/2023	REVISED -

STATE OF ILLINOIS
DEPARTMENT OF TRANSPORTATION

SCHEDULE OF QUANTITIES
MOT

SCALE: N/A | SHEET 24 OF 48 SHEETS | STA. | TO STA.

F.A.* RTE.	SECTION	COUNTY	TOTAL SHEETS	SHEET NO.
*	(5)RS & (5&5HB)RC	WINNEBAGO	1279	72
		CONTRACT NO. 64R71		
	ILLINOIS FED. AID PROJECT			

* FAI ROUTE 39 (I-39) & FAP ROUTE 525 (US 20)

44000159 HOT-MIX ASPHALT SURFACE REMOVAL, 2 1/2" 80% FED / 20% STATE					
ALIGN	LT/RT			SQ YD	REMARKS
PRESTAGE 1					
RAMP DA	RT			1,066	
RAMP AC	LT			83	
RAMP DB	LT			373	
STAGE 2					
RAMP BC	LT			66	
			GRAND TOTAL	1,588	

44000160 HOT-MIX ASPHALT SURFACE REMOVAL, 2 3/4" 80% FED / 20% STATE					
ALIGN	LT/RT			SQ YD	REMARKS
STAGE 1					
RAMP CB	RT			719	
			GRAND TOTAL	719	

44000169 HOT-MIX ASPHALT SURFACE REMOVAL, 5" 80% FED / 20% STATE					
ALIGN	LT/RT			SQ YD	REMARKS
PRESTAGE 1					
RAMP DA	LT			186	
STAGE 2					
RAMP DA	LT			48	
			GRAND TOTAL	234	

MODEL: Default
FILE NAME: pw://benesch-pw.bentley.com:benesch-pw-01/Documents/10800s/10800,00/Eng_Docs/CAD_Sheets/General/D64R71-D01-sht-SCH-18D.dgn

benesch
Alfred Benesch & Company
35 W. Wacker Drive, Suite 3300
Chicago, Illinois 60601
312-565-0450 Job No. 10800.00

USER NAME = nReynolds	DESIGNED - A.GIBSON	REVISED -
	DRAWN - J.MAJCHER	REVISED -
PLOT SCALE = 0.167 ' / In.	CHECKED - J.TARDY	REVISED -
PLOT DATE = 10/26/2023	DATE - 10/13/2023	REVISED -

STATE OF ILLINOIS
DEPARTMENT OF TRANSPORTATION

SCHEDULE OF QUANTITIES
MOT

SCALE: N/A | SHEET 25 OF 48 SHEETS | STA. | TO STA.

F.A.* RTE.	SECTION	COUNTY	TOTAL SHEETS	SHEET NO.
*	(5)RS & (5&5HB)RC	WINNEBAGO	1279	73
		CONTRACT NO. 64R71		
	ILLINOIS FED. AID PROJECT			

* FAI ROUTE 39 (I-39) & FAP ROUTE 525 (US 20)

Z0062456
TEMPORARY PAVEMENT
80% FED / 20% STATE

ROAD	STA	STA	LT/RT	REMOVED Y/N	SQ YD	REMARKS
PRESTAGE 1						
HARRISON AVENUE	119+27.02	125+55.56	LT	Y	644	
HARRISON AVENUE	127+05.54	128+62.47	LT	Y	98	
HARRISON AVENUE	130+03.62	144+76.32	LT	Y	1,887	
HARRISON AVENUE	144+21.96	147+99.23	LT	Y	329	
RAMP DA	04+65.11	07+67.60	LT	Y	775	
RAMP CB	03+97.29	08+52.34	LT	Y	1,073	
RAMP DA	00+68.94	05+31.19	RT	Y	217	
HARRISON AVENUE	1314+80.47	1324+61.21	LT	Y	877	
RAMP DB	06+51.77	12+62.53	LT	Y	623	
HARRISON AVENUE	1330+84.39	1338+36.83	LT	Y	986	
HARRISON AVENUE	1339+77.50	1342+16.42	LT	Y	106	
PRESTAGE 2						
RAMP DA	03+96.39	07+99.74	LT	Y	677	
RAMP AC	08+55.90	10+91.96	LT	Y	1,162	
STAGE 1						
RAMP CA	04+47.64	10+20.92	LT	Y	938	
RAMP CB	00+00.00	11+06.02	RT	Y	1,629	
RAMP AD	21+75.78	26+37.03	LT	Y	916	
RAMP D ISLAND	147+56.49	149+17.00	RT	Y	687	
HARRISON AVENUE	127+08.00	132+08.00	RT	Y	557	
HARRISON AVENUE	1332+27.81	1338+45.81	RT	Y	714	
HARRISON AVENUE	1338+93.85	1340+66.45	RT	Y	132	
HARRISON AVENUE	151+34.61	1312+24.87	RT	N	444	
STAGE 1B						
HARRISON AVENUE	1312+24.88	1312+76.75	RT	N	97	
HARRISON AVENUE	1324+29.00	1332+26.99	RT	Y	615	
RAMP B ISLAND	1315+25.56	1317+98.72	RT	Y	1,220	
STAGE 2						
RAMP BC	20+93.93	22+50.02	LT	Y	248	
RAMP DA	04+84.42	06+12.86	LT	Y	323	
RAMP C ISLAND	147+22.77	149+17.25	LT	Y	664	
STAGE 2B						
RAMP A ISLAND	1314+78.45	1316+92.38	RT	Y	988	
STAGE 3						
STAGE 3B						
STAGE 4						
				SUBTOTAL	19,624	
				GRAND TOTAL	19,625	

Z0062458
TEMPORARY PAVEMENT (VARIABLE DEPTH)
80% FED / 20% STATE

ROAD	STA	STA	LT/RT	SQ YD	REMOVED (Y/N)	AVG DEPTH (IN)	TON	REMARKS
PRESTAGE 1								
HARRISON AVENUE ISLAND	125+77.02	125+98.93	LT	37.11	Y	8.00	1	
HARRISON AVENUE ISLAND	126+52.20	126+74.19	LT	41.67	Y	8.00	2	
PRESTAGE 2								
HARRISON AVENUE MEDIAN	116+00.00	125+81.70	LT	884.44	Y	8.00	32	
HARRISON AVENUE MEDIAN	132+07.75	152+34.15	LT/RT	1576.11	Y	8.00	57	
HARRISON AVENUE MEDIAN	1312+05.43	1334+26.65	LT/RT	1719.67	Y	8.00	62	
STAGE 1								
RAMP D ISLAND	147+56.49	149+17.00	RT	686.56	Y	8.00	25	
HARRISON AVENUE MEDIAN	138+97.94	147+40.11	RT	649.00	Y	12.00	35	
HARRISON AVENUE MEDIAN	148+81.29	1312+24.67	RT	551.22	Y	12.00	30	
HARRISON AVENUE MEDIAN	1317+03.57	1326+00.00	RT	875.67	Y	12.00	47	
HARRISON AVENUE MEDIAN	1331+71.91	1334+04.52	LT/RT	131.00	Y	12.00	7	
HARRISON AVENUE TEMP CONNECTION	1337+00.00	1338+00.00	RT	531.78	N	4.00	10	
RAMP BD	09+70.38	10+70.34	LT	252.78	Y	3.00	42	
STAGE 1B								
RAMP CA	135+92.37	142+66.35	RT	1001.33	Y	3.00	168	
HARRISON AVENUE MEDIAN	1312+24.87	1315+56.59	RT	422.33	Y	12.00	23	
RAMP CB	04+24.43	05+12.02	LT/RT	155.33	Y	3.00	26	
RAMP AD	25+74.50	29+68.53	LT/RT	453.11	Y	3.00	76	
HARRISON AVENUE MEDIAN	1325+70.46	1332+27.83	RT	397	Y	12.00	21	
STAGE 2								
HARRISON AVENUE MEDIAN	140+20.99	147+19.65	LT	565.56	Y	12.00	31	
HARRISON AVENUE MEDIAN	148+82.73	150+34.57	LT	195.22	Y	12.00	11	
HARRISON OUTSIDE SHOULDER	151+35.76	1313+81.17	LT	652.22	Y	9.00	26	
HARRISON AVENUE MEDIAN	1331+56.56	1334+10.82	LT	60.33	Y	12.00	3	
HARRISON AVENUE MEDIAN	1317+26.82	1320+02.52	LT	377.78	Y	12.00	20	
RAMP DB	02+61.59	05+71.49	LT	295.67	Y	3.00	4	
HARRISON AVENUE TEMP CONNECTION	1337+00.00	1338+00.00	LT	456.11	N	4.00	8	
HARRISON AVE	151+35.18	1312+79.69	RT	619	N	12.00	33	
HARRISON AVE	151+35.18	1313+80.29	RT	652	N	12.00	35	
HARRISON AVE	151+35.18	1313+43.82	RT	401	N	12.00	22	
HARRISON AVE	1312+05.37	1315+53.86	RT	355	Y	12.00	19	
HARRISON AVE	1315+53.36	1316+16.98	RT	61	Y	12.00	3	
STAGE 2B								
RAMP BC	22+00.00	23+76.29	LT/RT	314.78	Y	3.00	4	
RAMP DA	04+81.93	05+31.94	LT/RT	125.00	Y	3.00	2	
RAMP DA	01+99.28	04+17.32	RT	138.56	Y	3.00	2	
HARRISON AVENUE	149+98.30	152+34.87	LT	189.44	Y	3.00	3	
RAMP AC	10+70.10	11+19.97	LT/RT	160.89	Y	3.00	2	
HARRISON AVENUE	2+00	3+00	LT	102	N	12.00	6	
HARRISON AVENUE	2+00	3+51.12	LT	44	N	12.00	2	
HARRISON AVENUE	150+00	152+34	LT	189	Y	12.00	10	
HARRISON AVENUE	1316+16.88	1317+3.62	LT	106	Y	12.00	6	
STAGE 3								
STAGE 3B								
STAGE 4								
STAGE 4B								
					SUBTOTAL	916		
					GRAND TOTAL	917		

MODEL: Default
FILE NAME: pw://benesch-pw.bentley.com:benesch-pw-01/Documents/108000s/108000/00/Eng Docs/CAD Sheets/General/Z0264R71-DDI-sht-SCH-18E.dgn

benesch
Alfred Benesch & Company
35 W. Wacker Drive, Suite 3300
Chicago, Illinois 60601
312.565.0450 Job No. 10800.00

USER NAME = nReynolds	DESIGNED - A.GIBSON	REVISED -	
	DRAWN - J.MAJCHER	REVISED -	
PLOT SCALE = 0.167 ' / in.	CHECKED - J.TARDY	REVISED -	
PLOT DATE = 10/26/2023	DATE - 10/13/2023	REVISED -	

STATE OF ILLINOIS
DEPARTMENT OF TRANSPORTATION

SCHEDULE OF QUANTITIES
MOT

SCALE: N/A | SHEET 26 OF 48 SHEETS | STA. | TO STA.

F.A.* RTE.	SECTION	COUNTY	TOTAL SHEETS	SHEET NO.
*	(5)RS & (5&5HB)RC	WINNEBAGO	1279	74
		CONTRACT NO. 64R71		
	ILLINOIS	FED. AID PROJECT		

* FAI ROUTE 39 (I-39) & FAP ROUTE 525 (US 20)

40602970							
HOT-MIX ASPHALT BINDER COURSE IL-9.5FG N70							
80% FED / 20% STATE							
ROAD	STA	STA	SQ YD	UNIT WT (LBS/SY-IN)	THICKNESS (IN)	TON	REMARKS
RAMP DA			1066.0	112	1.50	90	
RAMP AC			83.1	112	1.50	7	
RAMP DB			373.2	112	1.50	32	
RAMP BC			65.9	112	1.50	6	
RAMP CB			718.6	112	1.75	71	
RAMP DA			185.8	112	3.00	32	
RAMP DA			435.0	112	3.00	74	
					SUBTOTAL	312	
					GRAND TOTAL	312	

NOTE: SQ YD AREA MEASURED IN CADD.

40604062							
HOT-MIX ASPHALT SURFACE COURSE IL-9.5 MIX D N70							
80% FED / 20% STATE							
ROAD	STA	STA	SQ YD	UNIT WT (LBS/SY-IN)	THICKNESS (IN)	TON	REMARKS
PR HARRISON AVE	123+45.00	123+50.00	42.8	112	2	5	BUTT JOINT
SOUTH MALL DR	29742.7	29849.09	1571.2	112.00	2.00	176	
RAMP DA			1066.0	112.00	1.00	60	
RAMP AC			83.1	112.00	1.00	5	
RAMP DB			373.2	112.00	1.00	21	
RAMP BC			65.9	112.00	1.00	4	
RAMP CB			718.6	112.00	1.00	41	
RAMP DA			185.8	112.00	2.00	21	
RAMP DA			435.0	112.00	2.00	49	
					SUBTOTAL	382	
					GRAND TOTAL	382	

NOTE: SQ YD AREA MEASURED IN CADD.

70400200					
RELOCATE TEMPORARY CONCRETE BARRIER					
80% FED / 20% STATE					
ALIGNMENT	STA FROM	LT/RT	STA TO	LT/RT	FOOT
Stage 1B					
US 20	132+09.08	LT	133+42.97	LT	137.5
US 20	130+76.82	RT	143+10.88	RT	1,237.5
US 20	1311+91.31	RT	1317+31.21	LT/RT	550.0
US 20	1322+03.04	RT	1333+36.90	LT/RT	1,137.5
RAMP CB	03+58.18	RT	05+59.13	RT	200.0
Stage 2					
US 20	123+06.21	RT	125+18.29	RT	212.5
US 20	126+13.87	RT	134+72.05	LT	762.5
US 20	135+56.27	LT	139+86.32	LT	437.5
RAMP BC	22+22.75	LT	27+46.78	LT	537.5
US 20	140+09.41	RT	149+96.85	RT	1,000.0
RAMP DA	03+19.48	LT	05+48.50	LT	250.0
US 20	1311+65.98	RT	1316+19.05	RT	462.5
US 20	1317+00.00	LT	1317+00.00	LT	75.0
US 20	1317+12.00	RT	1326+01.79	LT/RT	900.0
RAMP DB	06+92.05	LT	08+88.13	LT	212.5
US 20	1326+39.02	LT	1329+79.43	LT/RT	350.0
US 20	1333+37.99	LT	1337+90.10	LT/RT	462.5
US 20	1339+52.82	RT	1340+76.77	RT	125.0
Stage 2B					
RAMP BC	21+32.65	LT/RT	23+35.36	LT	237.5
US 20	148+04.73	LT	152+66.70	RT	525.0
US 20	1315+33.11	RT	1317+05.93	RT	175.0
US 20	1325+13.54	LT	1330+29.75	LT	525.0
US 20	1325+36.81	LT	1330+30.72	LT	500.0
Winter					
US 20	132+67.00	LT/RT	1312+44.18	RT	3,400.0
US 20	152+00.00	LT	1333+00.00	LT/RT	2,300.0
US 20 2B-2 quantity	146+98.23	LT	1317+36.73	RT	1,237.5
US 20 2B-2 quantity	146+98.23	LT	1317+36.73	RT	1,237.5
Stage 3					
I-39	2728+08.23	RT	2732+09.32	RT	412.5
Stage 3B					
I-39	2728+02.85	RT	2745+71.10	RT	1,850.0
Stage 4					
I-39	2730+18.73	RT	2738+62.76	RT	850.0
I-39	2731+19.57	LT	2741+04.22	LT	987.5
Stage 4B					
I-39	2728+61.32	RT	2733+57.36	RT	500.0
I-39	2729+63.39	LT	2737+09.30	RT	750.0
RELOCATE TEMPORARY CONCRETE BARRIER				SUBTOTAL	24,538
RELOCATE TEMPORARY CONCRETE BARRIER				GRAND TOTAL	24,538

70303120
TEMPORARY PAVEMENT MARKING - LINE 4" - MODIFIED URETHANE
80% FED / 20% STATE

ROAD	STA	LT/RT	STA	LT/RT	# COATS	DESCRIPTION	FACTOR	LENGTH	FOOT
Stage 1									
RAMP DA	2+34	11.2' RT	7+16	0.0' LT/RT	1	SOLID WHITE	1	461	461
	3+05	6.5' LT	7+25	16.0' LT	1	SOLID YELLOW	1	437	437
RAMP AC	10+66	0.0' LT/RT	13+32	5.9' RT	1	SOLID WHITE	1	264	264
	10+66	16.0' LT	12+70	11.6' LT	1	SOLID YELLOW	1	212	212
RAMP CB	2+45	34.2' LT	12+32	0.0' LT/RT	1	SOLID WHITE	1	1164	1,164
	4+21	25.8' LT	5+87	16.0' LT	1	SOLID YELLOW	1	180	180
RAMP BC	20+50	0.0' LT/RT	24+05	10.61' RT	1	SOLID WHITE	1	411	411
	19+43	16.0' LT	21+10	254.9' LT	1	SOLID WHITE	1	361	361
	18+39	16.0' LT	20+90	247.90' LT	1	SOLID YELLOW	1	389	389
	20+50	16.0 LT	23+26	7.1' LT	1	SOLID YELLOW	1	286	286
RAMP CA	12+25	0.0' LT/RT	00+00	390.3' LT	1	SOLID WHITE	1	1882	1,882
	0+44	11.8' LT	11+48	16.0' LT	1	SOLID YELLOW	1	1110	1,110
RAMP AD	18+25	0.0' LT/RT	35+37	39.9' LT	1	SOLID WHITE	1	2241	2,241
	18+25	16.0' LT	30+77	16.3' LT	1	SOLID YELLOW	1	1258	1,258
HARR/US20	115+61	29.0' RT	1343+59	34.0' LT	1	SOLID WHITE	1	12768	12,768
HARR/US20	116+00	5.5' RT	1343+74	10.0' LT	1	SOLID YELLOW	1	801	801
HARR/US20	116+28	2.9' RT	1338+05	24.5' LT	1	DOUBLE YELLOW	2	5624	11,248
I-39	2721+25	44.0' LT	2726+20	61.7' LT	1	SOLID WHITE	1	490	490
Stage 1B									
RAMP CB	00+00	349.0' LT	11+06	0.0' LT/RT	1	SOLID WHITE	1	1648	1,648
	00+70	17.9' LT	11+04	16.0' LT	1	SOLID YELLOW	1	1035	1,035
RAMP AD	21+25	0.0' LT/RT	29+79	51.3' LT	1	SOLID WHITE	1	910	910
	21+25	16.0' LT	00+29.79	51.3' LT	1	SOLID YELLOW	1	526	526
RAMP CA	1+80	47.5' LT	10+53	0.0' LT/RT	1	SOLID WHITE	1	1550	1,550
	5+78	64.1' LT	10+53	16.0" LT	1	SOLID YELLOW	1	517	517
HARR/US20	115+61	29.1' RT	134+18	2.5' LT	1	SOLID WHITE	1	2229	2,229
HARR/US20	116+00	5.5' RT	132+58	24.3' LT	1	SOLID YELLOW	1	1952	1,952
I-39	2721+25	44.0' LT	2726+20	61.7' LT	1	SOLID WHITE	1	490	490
Stage 2									
RAMP DA	0+25	60.0' LT	4+27	9.9' RT	1	SOLID WHITE	1	482	482
	2+68	40.8' LT	7	15.5' LT	1	SOLID YELLOW	1	454	454
RAMP CB	1+30	13.5 RT	6+55	0.0' LT/RT	1	SOLID WHITE	1	568	568
	3+75	5.7' RT	6+56	16.0' LT	1	SOLID YELLOW	1	291	291
RAMP BD	11+16	0.0' LT/RT	12+36	6.2' LT	1	SOLID WHITE	1	204	204
RAMP AC	8+80	0.0' LT/RT	11+40	131.3' LT	1	SOLID YELLOW	1	637	637
RAMP BC	18+82	0.0' LT/RT	133+51	7.0' RT	1	SOLID WHITE	1	1646	1,646
	18+39	16.0' LT	28+16	28.0' LT	1	SOLID YELLOW	1	988	988
RAMP CA	3+65	0.0' LT/RT	10+53	0.0' LT/RT	1	SOLID WHITE	1	689	689
	5+90	16.0' LT	10+53	16.0' LT	1	SOLID YELLOW	1	478	478
RAMP AD	21+26	0.0' LT/RT	29+00	2.1' RT	1	SOLID WHITE	1	773	773
	21+26	16.0' LT	25+92	16.0' LT	1	SOLID YELLOW	1	477	477
RAMP DB	2+94	53.4' LT	12+67	0.0' LT/RT	1	SOLID WHITE	1	1150	1,150
	7+20	45.0' LT	12+67	16.0' LT	1	SOLID YELLOW	1	556	556
HARR/US20	115+44	28.9' RT	1344+02	34.0' RT	1	SOLID WHITE	1	12385	12,385
HARR/US20	116+38	6.0' RT	1343+85	10.0' RT	1	SOLID YELLOW	1	1000	1,000
HARR/US20	116+94	3.6' RT	1338+02	38.5' RT	1	DOUBLE YELLOW	2	6162	12,324
MALL 2A-1	124+00	0.0' LT	128+00	0.0' RT	1	SOLID WHITE	1	3290	3,290
MALL 2A-1	124+00	0.0' LT	128+00	0.0' RT	1	DOUBLE YELLOW	2	412	824
MALL 2A-2	124+00	0.0' LT	128+00	0.0' RT	1	SOLID WHITE	1	1453	1,453
MALL 2A-2	124+00	0.0' LT	128+00	0.0' RT	1	DOUBLE YELLOW	2	670	1,340
Stage 2B									
RAMP DA	1+96	58.4' LT	10+15	0.0' LT/RT	1	SOLID WHITE	1	4683	4,683
RAMP AC	8+32	16.0' LT	10+51	212.58' LT	1	SOLID WHITE	1	437	437
	8+32	0.0' LT/RT	10+48	181.9' LT	1	SOLID YELLOW	1	341	341
RAMP DB	00+00	315.5' LT	12+67	0.0' LT/RT	1	SOLID WHITE	1	2619	2,619
	05+21	12.5' LT	12+67	16.0' LT	1	SOLID YELLOW	1	755	755
RAMP BC	20+63	0.0' LT/RT	27+27	52..2' LT	1	SOLID WHITE	1	704	704
	20+64	16.0' LT	23+71	66.3' LT	1	SOLID YELLOW	1	358	358
HARR/US20	124+32	4.6' RT	1318+08	9.5' RT	1	SOLID WHITE	1	1665	1,665
HARR/US20 2B-2	143+94.42	34' LT	150+05.47	34' LT	1	SOLID WHITE	1	625	625
HARR/US20 2B-2	143+94.42	10' LT	150+05.47	10' LT	1	SOLID YELLOW	1	625	625
HARR/US20 2B-2	144+38.64	34' RT	150+99.47	35.8' RT	1	SOLID WHITE	1	665	665
HARR/US20 2B-2	144+38.64	10' RT	151+34.90	10' RT	1	SOLID YELLOW	1	690	690
HARR/US20 2B-2	1314+39.09	34' LT	1320+19.16	34' LT	1	SOLID WHITE	1	580	580
HARR/US20 2B-2	1314+39.09	10' LT	1320+19.16	10' LT	1	SOLID YELLOW	1	580	580
HARR/US20 2B-2	1314+13.39	34' RT	1320+08.02	34' RT	1	SOLID WHITE	1	580	580
HARR/US20 2B-2	1314+13.39	10' RT	1320+08.02	10' RT	1	SOLID YELLOW	1	580	580

70303120
TEMPORARY PAVEMENT MARKING - LINE 4" - MODIFIED URETHANE
80% FED / 20% STATE

ROAD	STA	LT/RT	STA	LT/RT	# COATS	DESCRIPTION	FACTOR	LENGTH	FOOT
Stage 3									
RAMP DA	08+92	14.95	4+50	95.9' LT	1	SOLID WHITE	1	387	387
	08+92	16.0' LT	4+79	118.7' LT	1	SOLID YELLOW	1	385	385
RAMP CB	5+52.87	33' LT	6+65	16' LT	1	SOLID WHITE	1	122	122
	5+52.87	33.3' LT	6+65	16.0' LT	1	SOLID YELLOW	1	122	122
RAMP BC	19+42	17.0' LT	23+73	1.0' RT	1	SOLID WHITE	1	494	494
	18+21	15.9' LT	23+57	15.4' LT	1	SOLID YELLOW	1	349	349
RAMP AD	5+55.31	49.6' LT	19+58.97	16' LT	1	SOLID WHITE	1	301	301
	5+52.87	33' LT	18+62.55	16' LT	1	SOLID YELLOW	1	417	417
HARR/US 20	144+66.52	34.0' RT	1320+34.25	34.2' RT	1	SOLID WHITE	1	4877	4,877
	144+14.42	10' LT	1324+57.29	10' RT	1	SOLID YELLOW	1	3919	3,919
I-39	2728+33	50.0' RT	2751+00	301.4' RT	1	SOLID WHITE	1	2394	2,394
	2728+33	26.0' RT	2752+27	232.8' RT	1	SOLID YELLOW	1	2139	2,139
Stage 3B									
RAMP BC	3+56	0' RT	12+92	16' RT	1	SOLID WHITE	1	1611	1,611
RAMP CB	15+76	0' RT	18+14	16' RT	1	SOLID WHITE	1	955	955
I-39	2722+46	44' RT	2751+70	240' RT	1	SOLID WHITE	1	5403	5,403
I-39	2722+46	44' RT	2751+70	240' RT	1	SOLID YELLOW	1	5797	5,797
Stage 4									
I-39	2702+88	LT	400+00	LT	1	SOLID WHITE	1	2046	2,046
I-39	2705+76	LT	2712+48	LT	1	SOLID WHITE	1	672	672
I-39	2705+76	LT	2712+48	LT	1	SOLID WHITE	1	672	672
I-39	2705+76	RT	12+50	RT	1	SOLID WHITE	1	1420	1,420
I-39	2707+50	RT	2715+66	0.0 RT	1	SOLID WHITE	1	1830	1,830
I-39	2709+55	76.0' RT	12+50	12.0' LT	1	SOLID YELLOW	1	923	923
I-39	2712+78	60.0' LT	2015+50	12.0' LT	1	SOLID YELLOW	1	1067	1,067
I-39	2726+42	13.0' LT	2757+51	15.0' RT	1	SOLID YELLOW	1	3107	3,107
I-39	2726+74	28.0' RT	2751+50	215.0' RT	1	SOLID YELLOW	1	2506	2,506
I-39	2721+15	31.0' LT	1317+09	31.0' LT	1	SOLID WHITE	1	2713	2,713
I-39	2722+36	56.0' RT	2751+50	215.0' RT	1	SOLID WHITE	1	3274	3,274
HARR/US 20	115+25	11.0' LT	120+95	38.0' RT	1	SOLID WHITE	1	562	562
HARR/US 20	126+60	100.0, LT	143+79	42.0' RT	1	SOLID WHITE	1	3512	3,512
HARR/US 20	126+50	80.0, RT	144+29	15.0' RT	1	SOLID WHITE	1	1749	1,749
HARR/US 20	143+78	47, LT	148+00	8.0' LT	1	SOLID WHITE	1	390	390
HARR/US 20	148+40	2.0' LT	1322+22	45.0' RT	1	SOLID WHITE	1	1910	1,910
HARR/US 20	1314+50	48.0, RT	1338+12	45.0' LT	1	SOLID WHITE	1	5225	5,225
HARR/US 20	1322+22	62.0' RT	1338+16	23.0' RT	1	SOLID WHITE	1	1584	1,584
HARR/US 20	114+69	8.0' RT	125+77	12.0' RT	1	SOLID YELLOW	1	1132	1,132
HARR/US 20	126+75	2.0' RT	147+76	2.0' RT	1	SOLID YELLOW	1	4623	4,623
HARR/US 20	148+07	8.0' LT	1316+60	4.0' RT	1	SOLID YELLOW	1	1905	1,905
HARR/US 20	1316+60	4.0' RT	1343+72	10.0' LT	1	SOLID YELLOW	1	4886	4886
PR RAMP D	144+29	15.0, RT	420+00	36.0' LT	1	SOLID WHITE	1	2630	2,630
Stage 4B									
HARR/US 20	127+00	4.0' RT	1340+00	6.0' LT	1	SOLID WHITE	1	5862	5,862
HARR/US 20	121+50	4.0' LT	1338+50	33.0' LT	1	SOLID WHITE	1	3420	3,420
HARR/US 20	114+50	2.0' LT	1344+50	6.0' RT	1	SOLID YELLOW	1	5710	5,710
HARR/US 20	114+50	4.0' LT	1344+50	6.0' LT	1	SOLID YELLOW	1	4708	4,708
I-39	2726+50	36.0' LT	2746+22	1.9' LT	1	SOLID WHITE	1	2545	2,545
I-39	2706+00	64.0' RT	2715+00	64.0' RT	1	SOLID WHITE	1	5420	5,420
I-39	2706+50	42.0' RT	2715+00	42.0' RT	1	SOLID YELLOW	1	810	810
I-39	2727+00	12.0' LT	2754+00	6.0' LT	1	SOLID YELLOW	1	3722	3,722
Winter									
RAMP DA	0+69	0.0' LT/RT	10+15	0.0' LT/RT	1	SOLID WHITE	1	1075	1,075
	3+72	16.0' LT	8+89	16.0' LT	1	SOLID YELLOW	1	551	551
RAMP CB	2+52	0.0' LT/RT	6+16	0.0' LT/RT	1	SOLID WHITE	1	514	514
	4+44	16.0' LT	6+16	16.0' LT	1	SOLID YELLOW	1	184	184
RAMP BD	10+26	0.0' LT/RT	15+74	0.0' LT/RT	1	SOLID WHITE	1	791	791
	10+90	16.0' LT	12+64	13.4' LT	1	SOLID YELLOW	1	183	183
RAMP AC	8+47	0.0' LT/RT	15+74	0.0' LT/RT	1	SOLID WHITE	1	923	923
	8+47	16.0' LT	12+49	16.0' LT	1	SOLID YELLOW	1	428	428
RAMP BC	20+62	0.0' LT/RT	29+29	0.0' LT/RT	1	SOLID WHITE	1	1081	1,081
	20+62	16.0' LT	23+29	16.0' LT	1	SOLID YELLOW	1	281	281
RAMP CA	00+00	0.0' LT/RT	5+71	16.0' LT	1	SOLID WHITE	1	635	635
RAMP AD	25+47	0.0' LT/RT	36+55	1.6' LT	1	SOLID WHITE	1	1382	1,382
	25+47	16.0' LT	25+96	16.0' LT	1	SOLID YELLOW	1	51	51
RAMP DB	00+00	0.0' LT/RT	7+65	0.0' LT/RT	1	SOLID WHITE	1	1271	1,271
HARR/US20	118+36	30.4' RT	1343+85	32.2' LT	1	SOLID WHITE	1	14607	14,607
HARR/US20	118+36	6.1' RT	1344+12	10.0' LT/RT	1	SOLID YELLOW	1	13381	13,381
								SUBTOTAL	254,861
								GRAND TOTAL	254,861

benesch
Alfred Benesch & Company
35 W. Wacker Drive, Suite 3300
Chicago, Illinois 60601
312-565-0450 Job No. 10800.00

USER NAME = nReynolds	DESIGNED - A.GIBSON	REVISED -	
	DRAWN - J.MAJCHER	REVISED -	
PLOT SCALE = 0.167 ' / In.	CHECKED - J.TARDY	REVISED -	
PLOT DATE = 10/26/2023	DATE - 10/13/2023	REVISED -	

STATE OF ILLINOIS
DEPARTMENT OF TRANSPORTATION

SCHEDULE OF QUANTITIES
MOT

SCALE: N/A | SHEET 28 OF 48 SHEETS | STA. | TO STA.

F.A.* RTE.	SECTION	COUNTY	TOTAL SHEETS	SHEET NO.
*	(5)RS & (5&5HB)RC	WINNEBAGO	1279	76
		CONTRACT NO. 64R71		
	ILLINOIS FED. AID PROJECT			

* FAI ROUTE 39 (I-39) & FAP ROUTE 525 (US 20)

MODEL: Default
FILE NAME: pw://benesch-pw.bentley.com:benesch-pw-01/Documents/10800s/10800.00/Eng_Docs/CAD Sheets/General/D264R71-SCH-186.dgn

70300241 TEMPORARY PAVEMENT MARKING - LINE 6" - PAINT									
80% FED / 20% STATE									
ROAD	STA	LT/RT	STA	LT/RT	# COATS	DESCRIPTION	FACTOR	LENGTH	FOOT
PreStage 1									
HARR/US 20	114+69	16.0' LT/RT	1343+80	22.2' RT	1	DOTTED LINE	0.25	998	250
PreStage 2									
HARR/US 20	114+69	16.0' LT/RT	1343+80	22.2' RT	1	DOTTED LINE	0.25	1456.00	364.00
								SUBTOTAL	614
								GRAND TOTAL	614

MODEL: Default
FILE NAME: pw://benesch-pw.bentley.com:benesch-pw-01/Documents/10800s/10800,00/Eng_Docs/CAD_Sheets/General/D64R71-D01-sht-SCH-18H.dgn

benesch
Alfred Benesch & Company
35 W. Wacker Drive, Suite 3300
Chicago, Illinois 60601
312-565-0450 Job No. 10800,00

USER NAME = nReynolds	DESIGNED - A.GIBSON	REVISED -
	DRAWN - J.MAJCHER	REVISED -
PLOT SCALE = 0.167 ' / In.	CHECKED - J.TARDY	REVISED -
PLOT DATE = 10/26/2023	DATE - 10/13/2023	REVISED -

STATE OF ILLINOIS
DEPARTMENT OF TRANSPORTATION

SCHEDULE OF QUANTITIES
MOT

SCALE: N/A | SHEET 29 OF 48 SHEETS | STA. | TO STA.

F.A.* RTE.	SECTION	COUNTY	TOTAL SHEETS	SHEET NO.
*	(5)RS & (5&5HB)RC	WINNEBAGO	1279	77
		CONTRACT NO. 64R71		
	ILLINOIS FED. AID PROJECT			

* FAI ROUTE 39 (I-39) & FAP ROUTE 525 (US 20)

70303130

TEMPORARY PAVEMENT MARKING - LINE 6" - MODIFIED URETHANE

80% FED / 20% STATE

ROAD	STA	LT/RT	STA	LT/RT	# COATS	DESCRIPTION	FACTOR	LENGTH	FOOT
PreStage 1									
HARR/US 20	114+69	16.0' LT/RT	1343+80	22.2' RT	1	DOTTED LINE	0.25	998	250
HARR/US 20	114+69	16.0' LT/RT	1343+80	22.2' RT	1	SKIP DASH LINE	0.25	7,435	1,859
PreStage 2									
HARR/US 20	114+69	16.0' LT/RT	1343+80	22.2' RT	1	DOTTED LINE	0.25	2194	549
HARR/US 20	114+69	16.0' LT/RT	1343+80	22.2' RT	1	SKIP DASH LINE	0.25	8470	2,118
Stage 1									
HARR/US 20	114+69	16.0' LT/RT	1343+80	22.2' RT	1	DOTTED LINE	0.25	1576	394
HARR/US 20	114+69	16.0' LT/RT	1343+80	22.2' RT	1	SKIP DASH LINE	0.25	12975	3,244
Stage 1B									
HARR/US-20	114+69	16.0' LT/RT	132+60	22.2' RT	1	DOTTED LINE	0.25	579	145
HARR/US-20	114+69	16.0' LT/RT	132+60	22.2' RT	1	SKIP DASH LINE	0.25	1548	387
Stage 2									
HARR/US 20	114+69	16.0' LT/RT	1343+80	22.2' RT	1	DOTTED LINE	0.25	1506	377
HARR/US 20	114+69	16.0' LT/RT	1343+80	22.2' RT	1	SKIP DASH LINE	0.25	13200	3,300
Stage 2A-1									
HARR/US 20	114+69	16.0' LT/RT	1343+80	22.2' RT	1	DOTTED LINE	0.25	606	152
Stage 2A-2									
HARR/US 20	114+69	16.0' LT/RT	1343+80	22.2' RT	1	DOTTED LINE	0.25	441	110
Stage 2B									
HARR/US 20	140+21	7.0' RT	1335+82	16.5' RT	1	DOTTED	0.25	711	178
Stage 2B-2									
HARR/US 20	150+99.47	35.8' RT	1313+26.68	34' RT	1	DOTTED LINE	0.25	425	106
HARR/US 20	143+94.42	22' LT	1320+08	22' RT	1	SKIP DASH LINE	0.25	2475	619
Stage 3									
HARR/US 20	1311+23	34' LT	1320+45	34' RT	1	DOTTED LINE	0.25	945	236
HARR/US 20	1311+23	22' LT	1320+45	22' RT	1	SKIP DASH LINE	0.25	1940	485
I-39	22+00	5.6' RT	2748+11	245.2' RT	1	DOTTED LINE	0.25	368	92
I-39	06+33	12.6' RT	2752+04	209.5' RT	1	SKIP DASH LINE	0.25	2400	600
Stage 3B									
I-39	1313+94	41.0' LT	2749+68	31.4' LT	1	DOTTED LINE	0.25	2389	597
I-39	2786+23	32.0' LT	2751+36	219.3' RT	1	SKIP DASH LINE	0.25	5631	1408
Stage 4									
HARR/US 20	115+26	31.0' RT	144+30	45.0' RT	1	SKIP DASH LANE LINE	0.25	2755	689
	128+32	10.0' LT	147+75	2.0' LT	1	SKIP DASH LANE LINE	0.25	1948	487
	1320+80	59.0' LT	1343+72	22.0' LT	1	SKIP DASH LANE LINE	0.25	2564	641
	148+20	4.0' LT	1342+00	22.0' RT	1	SKIP DASH LANE LINE	0.25	3014	754
	128+25	45.0' LT	129+30	34.0' LT	1	DOTTED LINE	0.25	110	28
	129+55	14.0' LT	132+00	22.0' LT	1	DOTTED LINE	0.25	246	62
	132+00	22.0' LT	1343+72	10.0' LT	1	DOTTED LINE	0.25	2826	707
I-39	2706+72	50.0' RT	2751+60	216.0' RT	1	SKIP DASH LANE LINE	0.25	4568	1142
	2726+85	24.0' LT	2754+00	20.0' LT	1	SKIP DASH LANE LINE	0.25	2724	681
	2748+00	8.0' LT	2754+00	8.0' LT	1	DOTTED LINE	0.25	602	151
	1317+10	31.0' LT	2746+79	32.0' LT	1	DOTTED LINE	0.25	303	76
	16+25	24.0' RT	23+50	24.0' RT	1	DOTTED LINE	0.25	725	181
	2704+50	60.0' RT	2707+60	60.0' RT	1	DOTTED LINE	0.25	300	75
	2702+88	25.0' LT	2705+77	25.0' LT	1	DOTTED LINE	0.25	288	72
Stage 4B									
HARR/US 20	114+50	22.0' RT	1337+50	22.0' RT	1	SKIP DASH LANE LINE	0.25	5674	1419
	127+00	20.0' LT	1337+50	20.0' LT	1	SKIP DASH LANE LINE	0.25	6696	1674
	127+00	34.0' LT	138+00	34.0' LT	1	DOTTED LINE	0.25	1105	276
	138+50	32.0' RT	143+50	32.0' RT	1	DOTTED LINE	0.25	510	128
	147+00	4.0' LT	1317+00	4.0' LT	1	DOTTED LINE	0.25	944	236
	1321+00	32.0' RT	1334+00	32.0' RT	1	DOTTED LINE	0.25	1338	335
I-39	2727+00	25.0' LT		20.0' LT	1	SKIP DASH LANE LINE	0.25	2780	695
I-39	2706+50	52.0' RT	2715+50	52.0' RT	1	SKIP DASH LANE LINE	0.25	915	229
								SUBTOTAL	27,937
								GRAND TOTAL	27,937

MODEL: Default
FILE NAME: pw:\benesch-pw.bentley.com:benesch-pw-01\Documents\10800s\10800\00\Eng. Docs\CAD Sheets\General\D7264R71-2DI-sht-SCH-18I.dgn

benesch
Allied Benesch & Company
35 W. Wacker Drive, Suite 3300
Chicago, Illinois 60601
312.269.5450 Job No. 10800.00

USER NAME = nReynolds	DESIGNED - A.GIBSON	REVISED -	
	DRAWN - J.MAJCHER	REVISED -	
PLOT SCALE = 0.167 '/ in.	CHECKED - J.TARDY	REVISED -	
PLOT DATE = 10/26/2023	DATE - 10/13/2023	REVISED -	

STATE OF ILLINOIS
DEPARTMENT OF TRANSPORTATION

SCHEDULE OF QUANTITIES
MOT

SCALE: N/A | SHEET 30 OF 48 SHEETS | STA. | TO STA.

F.A.* RTE.	SECTION	COUNTY	TOTAL SHEETS	SHEET NO.
*	(5)RS & (5&5HB)RC	WINNEBAGO	1279	78
		CONTRACT NO. 64R71		
	ILLINOIS	FED. AID PROJECT		

* FAI ROUTE 39 (I-39) & FAP ROUTE 525 (US 20)

70303140 TEMPORARY PAVEMENT MARKING - LINE 8" - MODIFIED URETHANE 80% FED / 20% STATE									
ROAD	STA	LT/RT	STA	LT/RT	# COATS	DESCRIPTION	FACTOR	LENGTH	FOOT
Stage 1									
RAMP CA						GORE	1	400	400
RAMP CB						GORE	1	400	400
RAMP AD						GORE	1	400	400
RAMP BC						GORE	1	400	400
RAMP DA						GORE	1	400	400
RAMP AC						GORE	1	400	400
RAMP DB						GORE	1	400	400
Stage 1B									
RAMP CA						GORE	1	400	400
RAMP CB						GORE	1	400	400
RAMP AD						GORE	1	400	400
Stage 2									
RAMP CA						GORE	1	400	400
RAMP CB						GORE	1	400	400
RAMP AD						GORE	1	400	400
RAMP BC						GORE	1	400	400
RAMP DA						GORE	1	400	400
RAMP AC						GORE	1	400	400
RAMP DB						GORE	1	400	400
Stage 2B									
RAMP BC						GORE	1	400	400
RAMP DA						GORE	1	400	400
RAMP AC						GORE	1	400	400
RAMP DB						GORE	1	400	400
Stage 2B-2									
RAMP BC						GORE	1	400	400
RAMP DA						GORE	1	400	400
Stage 3									
RAMP BC						GORE	1	400	400
RAMP AD						GORE	1	400	400
I-39 SB						GORE	1	400	400
I-39 NB						GORE	1	400	400
Stage 3B									
I-39 NB						GORE	1	400	400
I-39 SB						GORE	1	400	400
Stage 4									
I-39 NB						GORE	1	1200	1200
I-39 SB						GORE	1	1200	1200
RAMP CA						GORE	1	400	400
RAMP CB						GORE	1	400	400
RAMP AD						GORE	1	400	400
RAMP BC						GORE	1	400	400
RAMP DA						GORE	1	400	400
RAMP AC						GORE	1	400	400
RAMP DB						GORE	1	400	400
RAMP DC						GORE	1	400	400
Stage 4B									
I-39 NB						GORE	1	800	800
I-39 SB						GORE	1	1200	1200
RAMP CA						GORE	1	400	400
RAMP CB						GORE	1	400	400
RAMP AD						GORE	1	400	400
RAMP BC						GORE	1	400	400
RAMP DA						GORE	1	400	400
RAMP AC						GORE	1	400	400
RAMP DB						GORE	1	400	400
RAMP DC						GORE	1	400	400
								SUBTOTAL	22,400
								GRAND TOTAL	22,400

MODEL: Default
FILE NAME: pw://benesch-pw.bentley.com:benesch-pw-03/Documents/10800s/10800.00/Eng_Docs/CAD Sheets/General/M2R4R71-DDI-4th-SCH-18.dgn

benesch
Alfred Benesch & Company
35 W. Wacker Drive, Suite 3300
Chicago, Illinois 60601
312-565-0150 Job No. 10800.00

USER NAME = nReynolds	DESIGNED - A.GIBSON	REVISED -	
	DRAWN - J.MAJCHER	REVISED -	
PLOT SCALE = 0.167 ' / in.	CHECKED - J.TARDY	REVISED -	
PLOT DATE = 10/26/2023	DATE - 10/13/2023	REVISED -	

STATE OF ILLINOIS
DEPARTMENT OF TRANSPORTATION

SCHEDULE OF QUANTITIES
MOT

SCALE: N/A | SHEET 31 OF 48 SHEETS | STA. | TO STA.

F.A.* RTE.	SECTION	COUNTY	TOTAL SHEETS	SHEET NO.
*	(5)RS & (5&5HB)RC	WINNEBAGO	1279	79
		CONTRACT NO. 64R71		
	ILLINOIS	FED. AID PROJECT		

* FAI ROUTE 39 (I-39) & FAP ROUTE 525 (US 20)

70303160
TEMPORARY PAVEMENT MARKING - LINE 12" - MODIFIED URETHANE
80% FED / 20% STATE

ROAD	STA	LT/RT	STA	LT/RT	# COATS	DESCRIPTION	FACTOR	LENGTH	FOOT
Stage 1									
RAMP CA						GORE	1	100	100
RAMP CB						GORE	1	100	100
RAMP AD						GORE	1	100	100
RAMP BC						GORE	1	100	100
RAMP DA						GORE	1	100	100
RAMP AC						GORE	1	100	100
RAMP DB						GORE	1	100	100
Stage 1B									
RAMP CA						GORE	1	100	100
RAMP CB						GORE	1	100	100
RAMP AD						GORE	1	100	100
Stage 2									
RAMP CA						GORE	1	100	100
RAMP CB						GORE	1	100	100
RAMP AD						GORE	1	100	100
RAMP BC						GORE	1	100	100
RAMP DA						GORE	1	100	100
RAMP AC						GORE	1	100	100
RAMP DB						GORE	1	100	100
Stage 2B									
RAMP BC						GORE	1	100	100
RAMP DA						GORE	1	100	100
RAMP AC						GORE	1	100	100
RAMP DB						GORE	1	100	100
Stage 2B-2									
RAMP BC						GORE	1	100	100
RAMP DA						GORE	1	100	100
Stage 3									
RAMP BC						GORE	1	100	100
RAMP AD						GORE	1	100	100
I-39 SB						GORE	1	100	100
I-39 NB						GORE	1	100	100
Stage 3B									
I-39 NB						GORE	1	100	100
I-39 SB						GORE	1	100	100
Stage 4									
I-39 NB						GORE	1	300	300
I-39 SB						GORE	1	300	300
RAMP CA						GORE	1	100	100
RAMP CB						GORE	1	100	100
RAMP AD						GORE	1	100	100
RAMP BC						GORE	1	100	100
RAMP DA						GORE	1	100	100
RAMP AC						GORE	1	100	100
RAMP DB						GORE	1	100	100
RAMP DC						GORE	1	100	100
Stage 4B									
I-39 NB						GORE	1	200	200
I-39 SB						GORE	1	300	300
RAMP CA						GORE	1	100	100
RAMP CB						GORE	1	100	100
RAMP AD						GORE	1	100	100
RAMP BC						GORE	1	100	100
RAMP DA						GORE	1	100	100
RAMP AC						GORE	1	100	100
RAMP DB						GORE	1	100	100
RAMP DC						GORE	1	100	100
								SUBTOTAL	5,600
								GRAND TOTAL	5,600

MODEL: Default
FILE NAME: pw://benesch-pw.bentley.com:benesch-pw-31/Documents/10800s/10800,00/Eng_Docs/CAD Sheets/General/D64R71-DDI-sht-SCH-18K.dgn

benesch
Alfred Benesch & Company
35 W. Wacker Drive, Suite 3300
Chicago, Illinois 60601
312-565-0450 Job No. 10800,00

USER NAME = nReynolds	DESIGNED - A.GIBSON	REVISED -
	DRAWN - J.MAJCHER	REVISED -
PLOT SCALE = 0.167 ' / in.	CHECKED - J.TARDY	REVISED -
PLOT DATE = 10/26/2023	DATE - 10/13/2023	REVISED -

STATE OF ILLINOIS
DEPARTMENT OF TRANSPORTATION

SCHEDULE OF QUANTITIES
MOT

SCALE: N/A | SHEET 32 OF 48 SHEETS | STA. | TO STA.

F.A.* RTE.	SECTION	COUNTY	TOTAL SHEETS	SHEET NO.
*	(5)RS & (5&5HB)RC	WINNEBAGO	1279	80
		CONTRACT NO. 64R71		
	ILLINOIS FED. AID PROJECT			

* FAI ROUTE 39 (I-39) & FAP ROUTE 525 (US 20)

70303210 TEMPORARY PAVEMENT MARKING - LINE 24" - MODIFIED URETHANE 80% FED / 20% STATE									
ROAD	STA	LT/RT	STA	LT/RT	# COATS	DESCRIPTION	FACTOR	LENGTH	FOOT
Stage 1									
US 20							1	184	184
Stage 1B									
US 20							1	44	44
Stage 2									
US 20							1	150	150
Stage 2A-1									
US 20							1	100	100
Stage 2A-2									
US 20							1	80	80
Stage 2B									
US 20							1	46	46
WINTER									
US 20							1	150	150
Stage 3									
US 20/RAMPS							1	120	120
Stage 4									
US 20							1	200	200
Stage 4B									
US 20							1	303	303
								SUBTOTAL	1,377
								GRAND TOTAL	1,377

MODEL: Default
FILE NAME: pw://benesch-pw.bentley.com:benesch-pw-01/Documents/10800s/10800,00/Eng_Docs/CAD_Sheets/General/D64R71-D01-sht-SCH-18L.dgn

benesch
Alfred Benesch & Company
35 W. Wacker Drive, Suite 3300
Chicago, Illinois 60601
312-565-0450 Job No. 10800,00

USER NAME = nReynolds	DESIGNED - A.GIBSON	REVISED -
	DRAWN - J.MAJCHER	REVISED -
PLOT SCALE = 0.167 ' / In.	CHECKED - J.TARDY	REVISED -
PLOT DATE = 10/26/2023	DATE - 10/13/2023	REVISED -

STATE OF ILLINOIS
DEPARTMENT OF TRANSPORTATION

SCHEDULE OF QUANTITIES
MOT

SCALE: N/A | SHEET 33 OF 48 SHEETS | STA. | TO STA.

F.A.* RTE.	SECTION	COUNTY	TOTAL SHEETS	SHEET NO.
*	(5)RS & (5&5HB)RC	WINNEBAGO	1279	81
		CONTRACT NO. 64R71		
	ILLINOIS FED. AID PROJECT			

* FAI ROUTE 39 (I-39) & FAP ROUTE 525 (US 20)

78300202
PAVEMENT MARKING REMOVAL - WATERBLASTING
80% FED / 20% STATE

ROAD	STA	LT/RT	STA	LT/RT	LINE TYPE (IN.)	DESCRIPTION	FACTOR	LENGTH	SQ FT
Stage 1A-1									
MALL	298+12	3' RT	299+59	3' RT	4	DOUBLE YELLOW	2	147	98
MALL	298+08	0'	299+60	3'RT	12	CROSS HATCH	1	75	75
MALL	298+09	15' RT	299+60	15' RT	4	SOLID WHITE	1	151	50
MALL	299+14	6' RT				LT ARROW	1		16
MALL	299+44	6' RT				LT ARROW	1		16
MALL	299+56	15' RT		27' RT	24	STOP BAR	1	12	24
MALL	300+63	3' RT	30328.00	3' RT	4	DOUBLE YELLOW	2	265	177
MALL	301+89	16' RT	30331.00	16' RT	4	SOLID WHITE	1	142	47
MALL	301+86	27' RT	30274.00	27' RT	8	SOLID WHITE	1	88	59
MALL	301+93	7' RT				COMB LT THR ARROW			26
MALL	302+00	22' RT				TROUGH ARROW			12
MALL	301+92	35' RT				RT ARROW			16
MALL	302+71	7' RT				COMB LT THR ARROW			26
MALL	302+78	22' RT				TROUGH ARROW			12
MALL	302+70	35' RT				RT ARROW			16
MALL	304+19.00*	13' RT	30993.00	21' RT	4	SKIP DASH	0.5	581	97
MALL	307+35.00*	60' RT				THROUGH ARROW			45
MALL	307+35.00*	73' RT				THROUGH ARROW			45
MALL	308+77.00*	40' RT				LEFT ARROW			45
MALL	308+83.00*	53' RT				THROUGH ARROW			45
Stage 1A-3									
MALL	297+70.00	0	298+49.00	15' RT	4	DOUBLE YELLOW	2	82	55
MALL	298+61.00	0	299+13.00	27' LT	8	SOLID WHITE	1	59	39
MALL	300+49.00	50' LT	301+69.00	2' RT	8	SOLID WHITE	1	132	132
MALL	300+60.00	64' LT	302+09.00	2' RT	8	SOLID WHITE	1	164	164
MALL	304+19.00*	13' LT	309+93.00*	21' LT	4	SKIP DASH	0.5	581	97
MALL	304+20.00*	16' RT	309+89.00*	20' RT	4	DOUBLE YELLOW	2	581	387
MALL	307+35.00*	60' LT				THROUGH ARROW			45
MALL	307+35.00*	73' LT				THROUGH ARROW			45
MALL	309+04.00*	30' LT				THROUGH ARROW			45
MALL	309+04.00*	43' LT				THROUGH ARROW			45
MALL	309+89.00*	9' LT				THROUGH ARROW			45
Stage 1B									
US 20					4		1	5817	1939
HARR/US20	123+50	38.9' RT	130+82	2.9' RT	4	SOLID WHITE	1	785	262
HARR/US20	123+50	16.9' RT	128+48	2.5' RT	4	SOLID YELLOW	1	473	158
HARR/US20	139+00	6.4' RT	144+10	48.0' RT	4	SOLID WHITE	1	557	186
HARR/US20	142+98	7.8	144+46	45.2' RT	4	SOLID YELLOW	1	151	50
HARR/US20	25+31	35.7' LT	27+80	43.9' LT	4	SOLID WHITE	1	267	89
HARR/US20	24+88	52.4' LT	26+18	55.9' LT	4	SOLID YELLOW	1	133	44
Stage 2									
HARR/US20	115+44	28.9' RT	1344+02	34.0' RT	4	SOLID WHITE	1	12385	4128
HARR/US20	116+38	6.0' RT	1343+85	10.0' RT	4	SOLID YELLOW	1	1000	333
Stage 2B									
RAMP DA	1+96	58.4' LT	10+15	0.0' LT/RT	4	SOLID WHITE	1	4683	1561
RAMP BC	20+63	0.0' LT/RT	27+27	52.,2' LT	4	SOLID WHITE	1	704	235
RAMP BC	20+64	16.0' LT	23+71	66.3' LT	4	SOLID YELLOW	1	358	119
RAMP DB	00+00	315.5' LT	12+67	0.0' LT/RT	4	SOLID WHITE	1	2619	873
	05+21	12.5' LT	12+67	16.0' LT	4	SOLID YELLOW	1	755	252

78300202
PAVEMENT MARKING REMOVAL - WATERBLASTING
80% FED / 20% STATE

ROAD	STA	LT/RT	STA	LT/RT	LINE TYPE (IN.)	DESCRIPTION	FACTOR	LENGTH	SQ FT
Stage 3									
RAMP DA	08+92	14.95	4+50	95.9' LT	4	SOLID WHITE	1	387	129
RAMP DA	08+92	16.0' LT	4+79	118.7' LT	4	SOLID YELLOW	1	385	128
RAMP CB	5+52.87	33' LT	6+65	16' LT	4	SOLID WHITE	1	122	41
RAMP CB	5+52.87	33.3' LT	6+65	16.0' LT	4	SOLID YELLOW	1	122	41
RAMP BC	19+42	17.0' LT	23+73	1.0' RT	4	SOLID WHITE	1	494	165
RAMP BC	18+21	15.9' LT	23+57	15.4' LT	4	SOLID YELLOW	1	349	116
RAMP AD	5+55.31	49.6' LT	19+58.97	16' LT	4	SOLID WHITE	1	301	100
RAMP AD	5+52.87	33' LT	18+62.55	16' LT	4	SOLID YELLOW	1	417	139
I-39	2728+33	50.0' RT	2751+00	301.4' RT	4	SOLID WHITE	1	2394	798
I-39	2728+33	26.0' RT	2752+27	232.8' RT	4	SOLID YELLOW	1	2139	713
Stage 3B									
US 20							1	35420	11807
I-39	2726+55	20.0' LT	2752+05	9.8' RT	4	SOLID YELLOW	1	4873	1624
I-39	2727+10	44.0' LT	2751+51	243.1' RT	4	SOLID WHITE	1	5598	1866
Stage 4									
I-39	207+60	6.6' LT	2755+34	3.6' LT	4	SOLID YELLOW	1	6182	2061
I-39	2706+73	39.5' RT	2755+34	3.6'LT	4	SOLID WHITE	1	6203	2068
RAMP AD	207+60	6.6' LT	219+28	145.9' RT	4	SOLID YELLOW	1	1127	376
RAMP AD	205+98	1.6' LT	215+21	64.9' RT	4	SOLID WHITE	1	1420	473
Stage 4B									
I-39	1308+48	2.7' LT	2754+22	32.3' LT	4	SOLID YELLOW	1	3131	1044
I-39	1303+75	25.4' LT	2746+22	1.9' LT	4	SOLID WHITE	1	2545	848
FINAL									
MALL	298+49.00	15' LT	299+59.00	15' RT	4	DOUBLE YELLOW	2	110	73
MALL	298+49.00	26' RT	299+53.00	92' RT	8	SOLID WHITE	1	130	87
MALL	299+00.00	0	299+54.00	64' RT	8	SOLID WHITE	1	84	56
MALL	299+00.00	0	299+59.00	0	8	SOLID WHITE	1	59	39
MALL	300+77.00	27' RT	303+09.00	27' RT	8	SOLID WHITE	1	232	155
MALL	300+48.00	50' LT	300+60.00	64' LT	24	STOP BAR	1	18	36
MALL	300+72.00	15'LT	300+72.00	29' LT	24	STOP BAR	1	14	28
MALL	300+61.00	15' LT	303+37.00	15' LT	4	DOUBLE YELLOW	2	276	184
MALL	300+72.00	27' LT	301+00.00	27' LT	8	SOLID WHITE	1	28	19
MALL	301+00.00	27' LT	302+70.00	27' LT	8	SKIP DASH	0.5	170	57
MALL	302+70.00	27' LT	303+37.00	27' LT	8	SOLID WHITE	1	67	45
MALL	304+20.00*	16' LT	309+89.00*	20' LT	4	DOUBLE YELLOW	2	581	387
Contingency									
139	EXTRA				4		1	60000	20000
US20	EXTRA				4		1	60000	20000
								SUBTOTAL	77,974
								GRAND TOTAL	77,974

MODEL: Default
FILE NAME: pw:\\benesch-pw.bentley.com:benesch-pw-01\Documents\10800s\10800.00\Eng_Docs\CAD_Sheets\General\D764R71-2D\dsh\SCH-18M.dgn

benesch
Alfred Benesch & Company
35 W. Wacker Drive, Suite 3300
Chicago, Illinois 60601
312.565.0150 Job No. 10800.00

USER NAME = nReynolds	DESIGNED - A.GIBSON	REVISED -	
	DRAWN - J.MAJCHER	REVISED -	
PLOT SCALE = 0.167 '/ in.	CHECKED - J.TARDY	REVISED -	
PLOT DATE = 10/26/2023	DATE - 10/13/2023	REVISED -	

STATE OF ILLINOIS
DEPARTMENT OF TRANSPORTATION

SCHEDULE OF QUANTITIES
MOT

SCALE: N/A | SHEET 34 OF 48 SHEETS | STA. | TO STA.

F.A.* RTE.	SECTION	COUNTY	TOTAL SHEETS	SHEET NO.
*	(5)RS & (5&5HB)RC	WINNEBAGO	1279	82
		CONTRACT NO. 64R71		
	ILLINOIS	FED. AID PROJECT		

* FAI ROUTE 39 (I-39) & FAP ROUTE 525 (US 20)

X4400110 TEMPORARY PAVEMENT REMOVAL 80% FED / 20% STATE						
ROAD	STA	STA	LT/RT	DESCRIPTION	SQ YD	REMARKS
PRESTAGE 1						
HARRISON AVENUE	119+27.02	125+55.56	LT		644	
HARRISON AVENUE	127+05.54	128+62.47	LT		98	
HARRISON AVENUE	130+03.62	144+76.32	LT		1,887	
HARRISON AVENUE	144+21.96	147+99.23	LT		329	
RAMP DA	04+65.11	07+67.60	LT		775	
RAMP CB	03+97.29	08+52.34	LT		1,073	
RAMP DA	00+68.94	05+31.19	RT		217	
HARRISON AVENUE	1314+80.47	1324+61.21	LT		877	
RAMP DB	06+51.77	12+62.53	LT		623	
HARRISON AVENUE	1330+84.39	1338+36.83	LT		986	
HARRISON AVENUE	1339+77.50	1342+16.42	LT		106	
HARRISON AVENUE ISLAND	125+77.02	125+98.93	LT		37	
HARRISON AVENUE ISLAND	126+52.20	126+74.19	LT		42	
PRESTAGE 2						
RAMP DA	03+96.39	07+99.74	LT		677	
RAMP AC	08+55.90	10+91.96	LT		1,162	
HARRISON AVENUE	116+00.00	125+81.70	LT		884	
HARRISON AVENUE	132+07.75	152+34.15	LT/RT		1,576	
HARRISON AVENUE	1312+05.43	1334+26.65	LT/RT		1,720	
STAGE 1						
RAMP CA	04+47.64	10+20.92	LT		938	
RAMP CB	00+00.00	11+06.02	RT		1,629	
RAMP AD	21+75.78	26+37.03	LT		916	
RAMP D ISLAND	147+56.49	149+17.00	RT		687	
HARRISON AVENUE	127+08.00	132+08.00	RT		557	
HARRISON AVENUE	1332+27.81	1338+45.81	RT		714	
HARRISON AVENUE	1338+93.85	1340+66.45	RT		132	
RAMP D ISLAND	147+56.49	149+17.00	RT		687	
HARRISON AVENUE MEDIAN	138+97.94	147+40.11	RT		649	
HARRISON AVENUE MEDIAN	148+81.29	1312+24.67	RT		551	
HARRISON AVENUE MEDIAN	1317+03.57	1326+00.00	RT		876	
HARRISON AVENUE MEDIAN	1331+71.91	1334+04.52	LT/RT		131	
RAMP BD	09+70.38	10+70.34	LT		253	
STAGE 1B						
HARRISON AVENUE	1324+29.00	1332+26.99	RT		615	
RAMP B ISLAND	1315+25.56	1317+98.72	RT		1,220	
RAMP CA	135+92.37	142+66.35	RT		1,001	
HARRISON AVENUE MEDIAN	1312+24.87	1315+56.59	RT		422	
RAMP CB	04+24.43	05+12.02	LT/RT		155	
RAMP AD	25+74.50	29+68.53	LT/RT		453	
HARRISON AVENUE MEDIAN	1325+70.46	1332+27.83	RT		397	
STAGE 2						
RAMP BC	20+93.93	22+50.02	LT		248	
RAMP DA	04+84.42	06+12.86	LT		323	
RAMP C ISLAND	147+22.77	149+17.25	LT		664	
HARRISON AVENUE MEDIAN	140+20.99	147+19.65	LT		566	
HARRISON AVENUE MEDIAN	148+82.73	150+34.57	LT		195	
HARRISON OUTSIDE SHOULDER	151+35.76	1313+81.17	LT		652	
HARRISON AVENUE MEDIAN	1331+56.56	1334+10.82	LT		60	
HARRISON AVENUE MEDIAN	1317+26.82	1320+02.52	LT		378	
RAMP DB	02+61.59	05+71.49	LT		296	
HARRISON AVE	1312+05.37	1315+53.86	RT		355	
HARRISON AVE	1315+53.36	1316+16.98	RT		61	
STAGE 2B						
RAMP A ISLAND	1314+78.45	1316+92.38	RT		988	
SB I-39	1308+09.51	1319+95.00	RT		953	
NB I-39	04+55.43	26+84.82	LT		2,856	
RAMP BC	22+00.00	23+76.29	LT/RT		315	
RAMP DA	04+81.93	05+31.94	LT/RT		125	
RAMP DA	01+99.28	04+17.32	RT		139	
HARRISON AVENUE	149+98.30	152+34.87	LT		189	
RAMP AC	10+70.10	11+19.97	LT/RT		161	
HARRISON AVENUE	150+00	152+34	LT		189	
HARRISON AVENUE	1316+16.88	1317+3.62	LT		106	
STAGE 3						
SB I-39	1302+89.56	1309+35.22	LT		358	
STAGE 3B						
SB I-39	1302+39.59	2754+46.08	LT		1,540	
STAGE 4						
SB I-39	1307+43.45	1308+52.91	LT		86	
				SUBTOTAL	38,498	
				GRAND TOTAL	38,499	
NOTE: AREA MEASURED IN CADD						

X4062457 TEMPORARY PAVEMENT (INTERSTATE) 80% FED / 20% STATE						
ROAD						
PRESTAGE 1						
PRESTAGE 2						
STAGE 1						
STAGE 1B						
STAGE 2						
STAGE 2B						
SB I-39	1308+09.51	1319+95.00	RT	8574	953	
NB I-39	04+55.43	26+84.82	LT	25707	2856	
STAGE 3						
RAMP D TO I-39	411+36.48	416+33.27	LT	13168	1463	
SB I-39	1302+89.56	1309+35.22	LT	3221	358	
NB I-39				10350	1150	
STAGE 3B						
SB I-39	1302+39.59	2754+46.08	LT	13856	1540	
SB I-39				3338	371	
SB I-39				1200	133	
STAGE 4						
I-39 TO RAMP B	209+60.23	217+13.88	LT/RT	13296	1477	
SB I-39				2608	290	
SB I-39	1307+43.45	1308+52.91	LT	774	86	
STAGE 4B						
I-39 NB	7+45	10+00	LT	2174	242	
				SUBTOTAL	10,918	
				GRAND TOTAL	10,919	
NOTE: AREA MEASURED IN CADD.						

MODEL: Default
FILE NAME: pw://benesch-pw.bentley.com:benesch-pw-01/Documents/108006/108006.00/Eng Docs/CAD Sheets/General/M0264R71-DDI-sht-SCH-18N.dgn

benesch
Alfred Benesch & Company
35 W. Wacker Drive, Suite 3300
Chicago, Illinois 60601
312.565.0450 Job No. 10800.00

USER NAME = nReynolds	DESIGNED - A.GIBSON	REVISED -	
	DRAWN - J.MAJCHER	REVISED -	
PLOT SCALE = 0.167 ' / in.	CHECKED - J.TARDY	REVISED -	
PLOT DATE = 11/28/2023	DATE - 10/13/2023	REVISED -	

STATE OF ILLINOIS
DEPARTMENT OF TRANSPORTATION

SCHEDULE OF QUANTITIES
MOT

SCALE: N/A | SHEET 35 OF 48 SHEETS | STA. | TO STA.

F.A.* RTE.	SECTION	COUNTY	TOTAL SHEETS	SHEET NO.
*	(5)RS & (5&5HB)RC	WINNEBAGO	1279	83
		CONTRACT NO. 64R71		
	ILLINOIS FED. AID PROJECT			

* FAI ROUTE 39 (I-39) & FAP ROUTE 525 (US 20)

EXISTING SIGNS (REMOVALS, RELOCATIONS, & REINSTALLATIONS)

LOCATION	SIGN CODE	STATION	LT/RT	DESCRIPTION	MOUNTING TYPE	SIGN PANEL WIDTH	SIGN PANEL HEIGHT	SIGN PANEL AREA	72400310 REMOVE SIGN PANEL - TYPE 1	72400320 REMOVE SIGN PANEL - TYPE 2	72400330 REMOVE SIGN PANEL - TYPE 3	72400710 RELOCATE SIGN PANEL - TYPE 1	72400730 RELOCATE SIGN PANEL - TYPE 3	73600100 REMOVE OH SIGN STRUCTURE - SPAN	73600200 REMOVE OH SIGN STRUCTURE - CANTILEVER	73700100 REMOVE GROUND MOUNTED SIGN SUPPORT	73700200 REMOVE CONCRETE FOUNDATION - GROUND MOUNT	73700300 REMOVE CONCRETE FOUNDATION - OVERHEAD	73800005 REMOVE STRUCTURAL STEEL SUPPORT FOR OVERHEAD SIGN STRUCTURE - SPAN	73800010 REMOVE STRUCTURAL STEEL SUPPORT FOR OVERHEAD SIGN STRUCTURE - CANTILEVER	X7200075 REMOVE AND REINSTALL SIGN PANEL	Z0051398 REMOVE EXISTING SIGN POST	REMARKS
(ROAD)	(MUTCD or IDOT)	(STA)				(INCH)	(INCH)	(SQ FT)	(SQ FT)	(SQ FT)	(SQ FT)	(SQ FT)	(SQ FT)	(EACH)	(EACH)	(EACH)	(EACH)	(EACH)	(EACH)	(EACH)	(SQFT)	(EACH)	
I-39/US-20	2I,J,K	2639+97	RT	FOOD-EXIT	BREAK-AWAY STEEL	240.00	120.00	200.00			200.00					2	2						
I-39/US-20	2E-22	2702+11	RT	INTERCHANGE EXIT DIRECTION	BREAK-AWAY STEEL	120.00	144.00	120.00					120.00			2	2						EXIT 122A US 20 EAST
I-39/US-20	W13-3	2710+79	RT	ADVISORY EXIT RAMP SPEED - 35 MPH	WOOD POST	48.00	60.00	20.00		20.00													
I-39/US-20	D10-5	2711+57	LT	INTERMEDIATE ENHANCED REFERENCE LOCATION	TELESCOPING STEEL	18.00	60.00	7.50													7.50		SOUTH I-39 MILE 121.6
I-39/US-20	W4-1	2712+86	LT	MERGE	WOOD POST	48.00	48.00	16.00		16.00													
I-39/US-20	E5-1a	2714+48	RT	EXIT GORE	WOOD POST	108.00	60.00	45.00			45.00												EXIT 122 A
I-39/US-20	2E-23	2717+50	RT	INTERCHNGE EXIT DIRECTION	WOOD POST	96.00	48.00	32.00			32.00												HARRISON AVE NEXT RIGHT
I-39/US-20	E5-1a	2719+09	LT	EXIT GORE	WOOD POST	108.00	60.00	45.00			45.00												EXIT 122 B
I-39/US-20	W4-1	2720+83	RT	MERGE	WOOD POST	48.00	48.00	16.00		16.00													
I-39/US-20	D10-5	2720+89	LT	INTERMEDIATE ENHANCED REFERENCE LOCATION	TELESCOPING STEEL	18.00	60.00	7.50													7.50		SOUTH I-39 MILE 121.8
I-39/US-20	W13-3	2721+96	LT	ADVISORY EXIT RAMP SPEED - 25 MPH	OVERHEAD STRUCTURE	48.00	60.00	20.00															
I-39/US-20	E1-5P	2721+96	LT	EXIT NUMBER	OVERHEAD STRUCTURE	156.00	30.00	32.50							1			1		1			EXIT 122B
I-39/US-20	2E-23	2721+96	LT	INTERCHNGE ADVANCED	OVERHEAD STRUCTURE	216.00	96.00	144.00															US 20 EAST
I-39/US-20	D10-5	2722+27	RT	INTERMEDIATE ENHANCED REFERENCE LOCATION	TELESCOPING STEEL	18.00	60.00	7.50													7.50		NORTH I-39 MILE 121.8
I-39/US-20	2M-2	2723+07	RT	RECREATION GUIDE SIGN	BREAK-AWAY STEEL	144.00	42.00	42.00			42.00					2	2						WATER PARK
I-39/US-20	2E-23	2727+03	RT	INTERCHNGE EXIT DIRECTION	OVERHEAD STRUCTURE	216.00	96.00	144.00							1			1		1			EXIT 122B HARRISON AVE
I-39/US-20	W4-1	2728+04	LT	MERGE	WOOD POST	48.00	48.00	16.00		16.00													
I-39/US-20	W13-3	2728+57	RT	ADVISORY EXIT RAMP SPEED - 25 MPH	WOOD POST	48.00	60.00	20.00		20.00													
I-39/US-20	E5-1a	2729+52	RT	EXIT GORE	WOOD POST	108.00	60.00	45.00			45.00												EXIT 122B
I-39/US-20	D10-4	2731+51	LT	ENHANCED REFERENCE LOCATION	TELESCOPING STEEL	18.00	54.00	6.80													6.80		SOUTH I-39 MILE 122
I-39/US-20	D10-4	2731+64	RT	ENHANCED REFERENCE LOCATION	TELESCOPING STEEL	18.00	54.00	6.80													6.80		NORTH I-39 MILE 122
I-39/US-20	E5-1a	2734+15	LT	EXIT GORE	WOOD POST	108.00	60.00	45.00			45.00												EXIT 122 A
I-39/US-20	W4-3	2734+99	RT	ADDED LANE	WOOD POST	48.00	48.00	16.00		16.00													
I-39/US-20	2E-23	2741+39	RT	INTERCHNGE EXIT DIRECTION	OVERHEAD STRUCTURE	144.00	120.00	120.00							1			1		1			I-90 TOLL EAST EXIT ONLY
I-39/US-20	2M-2	2737+27	LT	RECREATION GUIDE SIGN	BREAK-AWAY STEEL	144.00	42.00	42.00			42.00					2	2						WATER PARK
I-39/US-20	W13-3	2738+85	LT	ADVISORY EXIT RAMP SPEED - 30 MPH	WOOD POST	48.00	60.00	20.00		20.00													
I-39/US-20	2E-23	2739+41	LT	PULL THROUGH	OVERHEAD STRUCTURE	198.00	90.00	123.75															US 20 WEST I-39 US 51 SOUTH
I-39/US-20	2E-22	2739+41	LT	INTERCHANGE ADVANCE	OVERHEAD STRUCTURE	108.00	108.00	81.00						1				2	2				EXIT 122 B US 20 EAST 1/4 MILE
I-39/US-20	2E-23	2739+41	LT	INTERCHANGE EXIT DIRECTION	OVERHEAD STRUCTURE	136.00	72.00	68.00															EXIT 122 B HARRISON AVE
I-39/US-20	W4-2L	2743+59	RT	MERGE	WOOD POST	48.00	48.00	16.00		16.00													
I-39/US-20	E1-5P	2761+82	LT	EXIT NUMBER	BREAK-AWAY STEEL	156.00	30.00	32.50			32.50					2	2						EXIT 122A
I-39/US-20	2E-22	2761+82	LT	INTERCHANGE ADVANCE	BREAK-AWAY STEEL	180.00	72.00	90.00			90.00												HARRISON AVE 1/2 MILE
EX RAMP AC	W1-8	5+30	LT	CHEVRON ALIGNMENT	WOOD POST	30.00	36.00	7.50	7.50														
EX RAMP AC	W1-8	6+05	LT	CHEVRON ALIGNMENT	WOOD POST	30.00	36.00	7.50	7.50														
EX RAMP AC	W1-8	6+78	LT	CHEVRON ALIGNMENT	WOOD POST	30.00	36.00	7.50	7.50														
EX RAMP AC	W1-8	7+53	LT	CHEVRON ALIGNMENT	WOOD POST	30.00	36.00	7.50	7.50														
EX RAMP AC	W1-8	8+27	LT	CHEVRON ALIGNMENT	WOOD POST	30.00	36.00	7.50	7.50														
EX RAMP AC	W1-8	9+00	LT	CHEVRON ALIGNMENT	WOOD POST	30.00	36.00	7.50	7.50														
EX RAMP AC	W3-5	9+26	RT	REDUCED SPEED LIMIT AHEAD - 45 MPH	TELESCOPING STEEL	36.00	36.00	9.00	9.00														
EX RAMP AC	W1-8	9+74	LT	CHEVRON ALIGNMENT	WOOD POST	30.00	36.00	7.50	7.50														
EX RAMP AC	W1-8	10+49	LT	CHEVRON ALIGNMENT	WOOD POST	30.00	36.00	7.50	7.50														
EX RAMP AC	W1-8	11+26	LT	CHEVRON ALIGNMENT	WOOD POST	30.00	36.00	7.50	7.50														
EX RAMP AD	W1-8	8+79	LT	CHEVRON ALIGNMENT	WOOD POST	30.00	36.00	7.50	7.50														
EX RAMP AD	W1-8	9+82	LT	CHEVRON ALIGNMENT	WOOD POST	30.00	36.00	7.50	7.50														
EX RAMP AD	W1-8	10+85	LT	CHEVRON ALIGNMENT	WOOD POST	30.00	36.00	7.50	7.50														
EX RAMP AD	W1-8	11+89	LT	CHEVRON ALIGNMENT	WOOD POST	30.00	36.00	7.50	7.50														
EX RAMP AD	W1-8	15+11	RT	CHEVRON ALIGNMENT	WOOD POST	30.00	36.00	7.50	7.50														
EX RAMP AD	W1-8	16+14	RT	CHEVRON ALIGNMENT	WOOD POST	30.00	36.00	7.50	7.50														
EX RAMP AD	W1-8	17+17	RT	CHEVRON ALIGNMENT	WOOD POST	30.00	36.00	7.50	7.50														
EX RAMP AD	W1-8	18+20	RT	CHEVRON ALIGNMENT	WOOD POST	30.00	36.00	7.50	7.50														
EX RAMP AD	W3-5	20+38	RT	REDUCED SPEED LIMIT AHEAD - 45 MPH	WOOD POST	36.00	36.00	9.00	9.00														
EX RAMP AD	W1-8	22+14	LT	CHEVRON ALIGNMENT	WOOD POST	30.00	36.00	7.50	7.50														
EX RAMP AD	W1-8	23+04	LT	CHEVRON ALIGNMENT	WOOD POST	30.00	36.00	7.50	7.50														
EX RAMP AD	W1-8	23+93	LT	CHEVRON ALIGNMENT	WOOD POST	30.00	36.00	7.50	7.50														
EX RAMP AD	W1-8	24+82	LT	CHEVRON ALIGNMENT	WOOD POST	30.00	36.00	7.50	7.50														

MODEL: Default
FILE NAME: pw:\benesch-pw.bentley.com:benesch-pw-01\Documents\10800s\10800.00\Eng_Docs\CAD_Sheets\General\D0764R71-2D\shi-SCH-19.dgn

benesch
Alfred Benesch & Company
36 W. Wacker Drive, Suite 3300
Chicago, Illinois 60601
312-565-0150 Job No. 10800.00

USER NAME = mtoney	DESIGNED - A.GIBSON	REVISED -	
	DRAWN - J.MAJCHER	REVISED -	
PLOT SCALE = 0.167 ' / in.	CHECKED - J.TARDY	REVISED -	
PLOT DATE = 10/13/2023	DATE - 10/13/2023	REVISED -	

STATE OF ILLINOIS
DEPARTMENT OF TRANSPORTATION

SCHEDULE OF QUANTITIES
EXISTING SIGNING

SCALE: N/A | SHEET 36 OF 48 SHEETS | STA. | TO STA.

F.A.* RTE.	SECTION	COUNTY	TOTAL SHEETS	SHEET NO.
*	(5)RS & (5&5HB)RC	WINNEBAGO	1279	84
		CONTRACT NO. 64R71		
	ILLINOIS	FED. AID PROJECT		

* FAI ROUTE 39 (I-39) & FAP ROUTE 525 (US 20)

EXISTING SIGNS (REMOVALS, RELOCATIONS, & REINSTALLATIONS)																							
									72400310	72400320	72400330	72400710	72400730	73600100	73600200	73700100	73700200	73700300	73800005	73800010	X7200075	Z0051398	
LOCATION	SIGN CODE	STATION	LT/RT	DESCRIPTION	MOUNTING TYPE	SIGN PANEL WIDTH	SIGN PANEL HEIGHT	SIGN PANEL AREA	REMOVE SIGN PANEL - TYPE 1	REMOVE SIGN PANEL - TYPE 2	REMOVE SIGN PANEL - TYPE 3	RELOCATE SIGN PANEL - TYPE 1	RELOCATE SIGN PANEL - TYPE 3	REMOVE OH SIGN STRUCTURE - SPAN	REMOVE OH SIGN STRUCTURE - CANTILEVER	REMOVE GROUND MOUNTED SIGN SUPPORT	REMOVE CONCRETE FOUNDATION - GROUND MOUNT	REMOVE CONCRETE FOUNDATION - OVERHEAD	REMOVE STRUCTURAL STEEL SUPPORT FOR OVERHEAD SIGN STRUCTURE - SPAN	REMOVE STRUCTURAL STEEL SUPPORT FOR OVERHEAD SIGN STRUCTURE - CANTILEVER	REMOVE AND REINSTALL SIGN PANEL	REMOVE EXISTING SIGN POST	REMARKS
(ROAD)	(MUTCD or IDOT)	(STA)				(INCH)	(INCH)	(SQ FT)	(SQ FT)	(SQ FT)	(SQ FT)	(SQ FT)	(SQ FT)	(EACH)	(EACH)	(EACH)	(EACH)	(EACH)	(EACH)	(EACH)	(SQFT)	(EACH)	
EX RAMP BC	W1-8	10+18	LT	CHEVRON ALIGNMENT	WOOD POST	30.00	36.00	7.50	7.50														
EX RAMP BC	W1-8	10+99	LT	CHEVRON ALIGNMENT	WOOD POST	30.00	36.00	7.50	7.50														
EX RAMP BC	W1-8	11+81	LT	CHEVRON ALIGNMENT	WOOD POST	30.00	36.00	7.50	7.50														
EX RAMP BC	W1-8	12+62	LT	CHEVRON ALIGNMENT	WOOD POST	30.00	36.00	7.50	7.50														
EX RAMP BC	W1-8	16+29	RT	CHEVRON ALIGNMENT	WOOD POST	30.00	36.00	7.50	7.50														
EX RAMP BC	W1-8	17+03	RT	CHEVRON ALIGNMENT	WOOD POST	30.00	36.00	7.50	7.50														
EX RAMP BC	W1-8	17+77	RT	CHEVRON ALIGNMENT	WOOD POST	30.00	36.00	7.50	7.50														
EX RAMP BC	W3-5	19+63	RT	REDUCED SPEED LIMIT AHEAD - 45 MPH	TELESCOPING STEEL	36.00	36.00	9.00	9.00														
EX RAMP BC	W1-8	20+99	RT	CHEVRON ALIGNMENT	WOOD POST	30.00	36.00	7.50	7.50														
EX RAMP BC	W1-8	21+70	RT	CHEVRON ALIGNMENT	WOOD POST	30.00	36.00	7.50	7.50														
EX RAMP BC	W1-8	22+37	RT	CHEVRON ALIGNMENT	WOOD POST	30.00	36.00	7.50	7.50														
EX RAMP BD	W1-8	5+02	LT	CHEVRON ALIGNMENT	WOOD POST	30.00	36.00	7.50	7.50														
EX RAMP BD	W1-8	5+86	LT	CHEVRON ALIGNMENT	WOOD POST	30.00	36.00	7.50	7.50														
EX RAMP BD	W1-8	6+71	LT	CHEVRON ALIGNMENT	WOOD POST	30.00	36.00	7.50	7.50														
EX RAMP BD	W1-8	7+56	LT	CHEVRON ALIGNMENT	WOOD POST	30.00	36.00	7.50	7.50														
EX RAMP BD	W1-8	8+41	LT	CHEVRON ALIGNMENT	WOOD POST	30.00	36.00	7.50	7.50														
EX RAMP BD	W1-8	9+26	LT	CHEVRON ALIGNMENT	WOOD POST	30.00	36.00	7.50	7.50														
EX RAMP BD	W3-5	9+34	RT	REDUCED SPEED LIMIT AHEAD - 45 MPH	TELESCOPING STEEL	36.00	36.00	9.00	9.00														
EX RAMP BD	W1-8	10+10	LT	CHEVRON ALIGNMENT	WOOD POST	30.00	36.00	7.50	7.50														
EX RAMP BD	W1-8	10+96	LT	CHEVRON ALIGNMENT	WOOD POST	30.00	36.00	7.50	7.50														
EX RAMP BD	W1-8	11+70	LT	CHEVRON ALIGNMENT	WOOD POST	30.00	36.00	7.50	7.50														
EX RAMP CA	W1-8	6+62	LT	CHEVRON ALIGNMENT	WOOD POST	30.00	36.00	7.50	7.50														
EX RAMP CA	W1-8	7+91	LT	CHEVRON ALIGNMENT	WOOD POST	30.00	36.00	7.50	7.50														
EX RAMP CA	W1-8	9+19	LT	CHEVRON ALIGNMENT	WOOD POST	30.00	36.00	7.50	7.50														
EX RAMP CA	W1-8	10+48	LT	CHEVRON ALIGNMENT	WOOD POST	30.00	36.00	7.50	7.50														
EX RAMP CA	W1-8	11+48	LT	CHEVRON ALIGNMENT	WOOD POST	30.00	36.00	7.50	7.50														
EX RAMP CA	W1-8	13+05	LT	CHEVRON ALIGNMENT	WOOD POST	30.00	36.00	7.50	7.50														
EX RAMP CA	W1-8	14+33	LT	CHEVRON ALIGNMENT	WOOD POST	30.00	36.00	7.50	7.50														
EX RAMP CA	W1-8	15+62	LT	CHEVRON ALIGNMENT	WOOD POST	30.00	36.00	7.50	7.50														
EX RAMP CA	W1-8	16+90	LT	CHEVRON ALIGNMENT	WOOD POST	30.00	36.00	7.50	7.50														
EX RAMP CA	W1-8	18+17	LT	CHEVRON ALIGNMENT	WOOD POST	30.00	36.00	7.50	7.50														
EX RAMP CB	W1-8	4+42	LT	CHEVRON ALIGNMENT	WOOD POST	30.00	36.00	7.50	7.50														
EX RAMP CB	W1-8	5+20	LT	CHEVRON ALIGNMENT	WOOD POST	30.00	36.00	7.50	7.50														
EX RAMP CB	W1-8	5+99	LT	CHEVRON ALIGNMENT	WOOD POST	30.00	36.00	7.50	7.50														
EX RAMP CB	W1-8	6+80	LT	CHEVRON ALIGNMENT	WOOD POST	30.00	36.00	7.50	7.50														
EX RAMP CB	W1-8	7+60	LT	CHEVRON ALIGNMENT	WOOD POST	30.00	36.00	7.50	7.50														
EX RAMP CB	W1-8	8+39	LT	CHEVRON ALIGNMENT	WOOD POST	30.00	36.00	7.50	7.50														
EX RAMP CB	W1-8	9+18	LT	CHEVRON ALIGNMENT	WOOD POST	30.00	36.00	7.50	7.50														
EX RAMP CB	W1-8	9+97	LT	CHEVRON ALIGNMENT	WOOD POST	30.00	36.00	7.50	7.50														
EX RAMP CB	W1-8	10+76	LT	CHEVRON ALIGNMENT	WOOD POST	30.00	36.00	7.50	7.50														
EX RAMP CB	W1-8	11+55	LT	CHEVRON ALIGNMENT	WOOD POST	30.00	36.00	7.50	7.50														
EX RAMP CB	W1-8	12+34	LT	CHEVRON ALIGNMENT	WOOD POST	30.00	36.00	7.50	7.50														
EX RAMP CB	W1-8	13+13	LT	CHEVRON ALIGNMENT	WOOD POST	30.00	36.00	7.50	7.50														
EX RAMP CB	W1-8	13+92	LT	CHEVRON ALIGNMENT	WOOD POST	30.00	36.00	7.50	7.50														
EX RAMP CB	W1-8	14+71	LT	CHEVRON ALIGNMENT	WOOD POST	30.00	36.00	7.50	7.50														
EX RAMP CB	W1-8	15+50	LT	CHEVRON ALIGNMENT	WOOD POST	30.00	36.00	7.50	7.50														
EX RAMP CB	W1-8	16+29	LT	CHEVRON ALIGNMENT	WOOD POST	30.00	36.00	7.50	7.50														
EX RAMP DA	W1-8	4+56	LT	CHEVRON ALIGNMENT	WOOD POST	30.00	36.00	7.50	7.50														
EX RAMP DA	W1-8	5+39	LT	CHEVRON ALIGNMENT	WOOD POST	30.00	36.00	7.50	7.50														
EX RAMP DA	W1-8	6+21	LT	CHEVRON ALIGNMENT	WOOD POST	30.00	36.00	7.50	7.50														
EX RAMP DA	W1-8	7+05	LT	CHEVRON ALIGNMENT	WOOD POST	30.00	36.00	7.50	7.50														
EX RAMP DA	W1-8	7+89	LT	CHEVRON ALIGNMENT	WOOD POST	30.00	36.00	7.50	7.50														
EX RAMP DA	W1-8	8+73	LT	CHEVRON ALIGNMENT	WOOD POST	30.00	36.00	7.50	7.50														
EX RAMP DA	W1-8	9+57	LT	CHEVRON ALIGNMENT	WOOD POST	30.00	36.00	7.50	7.50														
EX RAMP DA	W1-8	10+41	LT	CHEVRON ALIGNMENT	WOOD POST	30.00	36.00	7.50	7.50														
EX RAMP DA	W1-8	11+25	LT	CHEVRON ALIGNMENT	WOOD POST	30.00	36.00	7.50	7.50														
EX RAMP DA	W1-8	12+09	LT	CHEVRON ALIGNMENT	WOOD POST	30.00	36.00	7.50	7.50														
EX RAMP DA	W1-8	12+93	LT	CHEVRON ALIGNMENT	WOOD POST	30.00	36.00	7.50	7.50														
EX RAMP DA	W1-8	13+78	LT	CHEVRON ALIGNMENT	WOOD POST	30.00	36.00	7.50	7.50														
EX RAMP DA	W1-8	14+60	LT	CHEVRON ALIGNMENT	WOOD POST	30.00	36.00	7.50	7.50														
EX RAMP DB	W1-8	8+38	LT	CHEVRON ALIGNMENT	WOOD POST	30.00	36.00	7.50	7.50														
EX RAMP DB	W1-8	9+99	LT	CHEVRON ALIGNMENT	WOOD POST	30.00	36.00	7.50	7.50														
EX RAMP DB	W1-8	11+60	LT	CHEVRON ALIGNMENT	WOOD POST	30.00	36.00	7.50	7.50														
EX RAMP DB	W1-8	13+20	LT	CHEVRON ALIGNMENT	WOOD POST	30.00	36.00	7.50	7.50														
EX RAMP DB	W1-8	14+81	LT	CHEVRON ALIGNMENT	WOOD POST	30.00	36.00	7.50	7.50														
EX RAMP DB	W1-8	16+42	LT	CHEVRON ALIGNMENT	WOOD POST	30.00	36.00	7.50	7.50														
EX RAMP DB	W1-8	18+03	LT	CHEVRON ALIGNMENT	WOOD POST	30.00	36.00	7.50	7.50														
EX RAMP DB	W1-8	19+64	LT	CHEVRON ALIGNMENT	WOOD POST	30.00	36.00	7.50	7.50														
EX RAMP DB	2E-23	19+91	RT	INTERCHANGE EXIT DIRECTION	BREAK-AWAY STEEL	144.00	144.00	144.00			144.00					2	2						I-90 WEST I-39 US 51 NORTH
EX RAMP DB	W1-8	21+24	LT	CHEVRON ALIGNMENT	WOOD POST	30.00	36.00	7.50	7.50														
					COLUMN 9 SUBTOTALS				696	140	763	0	120	1	3	12	12	5	2	3	37	0	

EXISTING SIGNS (REMOVALS, RELOCATIONS, & REINSTALLATIONS)

LOCATION	SIGN CODE	STATION	LT/RT	DESCRIPTION	MOUNTING TYPE	SIGN PANEL WIDTH	SIGN PANEL HEIGHT	SIGN PANEL AREA	72400310 REMOVE SIGN PANEL - TYPE 1	72400320 REMOVE SIGN PANEL - TYPE 2	72400330 REMOVE SIGN PANEL - TYPE 3	72400710 RELOCATE SIGN PANEL - TYPE 1	72400730 RELOCATE SIGN PANEL - TYPE 3	73600100 REMOVE OH SIGN STRUCTURE - SPAN	73600200 REMOVE OH SIGN STRUCTURE - CANTILEVER	73700100 REMOVE GROUND MOUNTED SIGN SUPPORT	73700200 REMOVE CONCRETE FOUNDATION - GROUND MOUNT	73700300 REMOVE CONCRETE FOUNDATION - OVERHEAD	73800005 REMOVE STRUCTURAL STEEL SUPPORT FOR OVERHEAD SIGN STRUCTURE - SPAN	73800010 REMOVE STRUCTURAL STEEL SUPPORT FOR OVERHEAD SIGN STRUCTURE - CANTILEVER	X7200075 REMOVE AND REINSTALL SIGN PANEL	Z0051398 REMOVE EXISTING SIGN POST	REMARKS
(ROAD)	(MUTCD or IDOT)	(STA)				(INCH)	(INCH)	(SQ FT)	(SQ FT)	(SQ FT)	(SQ FT)	(SQ FT)	(SQ FT)	(EACH)	(EACH)	(EACH)	(EACH)	(EACH)	(EACH)	(EACH)	(EACH)	(SQFT)	(EACH)	
HARRISON AVE/US-20	R3-5	121+77	RT	MANDATORY MOVEMENT	TELESCOPING STEEL	30.00	36.00	7.50	7.50														RIGHT TURN ONLY
HARRISON AVE/US-20	R2-1	124+18	LT	SPEED LIMIT - 45 MPH	WOOD POST	30.00	36.00	7.50		7.50													
HARRISON AVE/US-20	R10-12	125+59	RT	LEFT TURN YIELD ON GREEN	BAND	30.00	36.00	7.50	7.50														
HARRISON AVE/US-20	R3-8	125+59	RT	ADVANCED INTERSECTION LANE CONTROL	BAND	30.00	30.00	6.25	6.25														
HARRISON AVE/US-20	D3-1	125+59	RT	STREET NAME	BAND	72.00	18.00	9.00	9.00														
HARRISON AVE/US-20	R10-12	125+91	LT	LEFT TURN YIELD ON GREEN	BAND	30.00	36.00	7.50	7.50														
HARRISON AVE/US-20	R10-I100	125+91	LT	STOP AT LINE	BAND	30.00	18.00	3.75	3.75														
HARRISON AVE/US-20	D3-1	125+91	LT	STREET NAME	BAND	60.00	18.00	7.50	7.50														
HARRISON AVE/US-20	R10-12	126+60	RT	LEFT TURN YIELD ON GREEN	BAND	30.00	36.00	7.50	7.50														
HARRISON AVE/US-20	R10-6	126+60	RT	STOP HERE ON RED	BAND	24.00	36.00	6.00	6.00														
HARRISON AVE/US-20	D3-1	126+60	RT	STREET NAME	BAND	60.00	18.00	7.50	7.50														
HARRISON AVE/US-20	R10-12	126+91	LT	LEFT TURN YIELD ON GREEN	BAND	30.00	36.00	7.50	7.50														
HARRISON AVE/US-20	D3-1	126+91	LT	STREET NAME	BAND	72.00	18.00	9.00	9.00														
HARRISON AVE/US-20	D11-1	127+47	RT	BIKE ROUTE	METAL POST	24.00	18.00	3.00	3.00														
HARRISON AVE/US-20	M6-4	127+47	RT	BICYCLE ROUTE ARROW SIGN	METAL POST	12.00	9.00	0.75	0.75														
HARRISON AVE/US-20	R3-5	129+50	RT	MANDATORY MOVEMENT	TELESCOPING STEEL	30.00	36.00	7.50	7.50														RIGHT TURN ONLY
HARRISON AVE/US-20	CUSTOM	134+14	LT	CUSTOM	TELESCOPING STEEL	24.00	24.00	4.00													5.00		CHERRYVALE MALL
HARRISON AVE/US-20	CUSTOM	134+14	LT	CUSTOM	TELESCOPING STEEL	24.00	6.00	1.00															RIGHT ARROW
HARRISON AVE/US-20	-	134+60	LT	SIGN POST	TELESCOPING STEEL	-	-	-														1	SIGN PANEL MISSING
HARRISON AVE/US-20	-	135+00	LT	SIGN POST	TELESCOPING STEEL	-	-	-														1	SIGN PANEL MISSING
HARRISON AVE/US-20	W3-3	135+61	LT	SIGNAL AHEAD	TELESCOPING STEEL	36.00	36.00	9.00	9.00														
HARRISON AVE/US-20	D3-1	135+61	LT	STREET NAME	TELESCOPING STEEL	30.00	9.00	1.90	1.90														S MALL DRIVE
HARRISON AVE/US-20	R2-1	136+68	RT	SPEED LIMIT - 45 MPH	TELESCOPING STEEL	30.00	36.00	7.50	7.50														
HARRISON AVE/US-20	R2-1	136+70	LT	SPEED LIMIT - 45 MPH	TELESCOPING STEEL	30.00	36.00	7.50	7.50														
HARRISON AVE/US-20	R5-I100	140+07	RT	FREEWAY EXCLUSION SIGN	WOOD POST	48.00	60.00	20.00		20.00													
HARRISON AVE/US-20	2E-23	140+90	RT	PULL THROUGH	OVERHEAD STRUCTURE	120.00	96.00	80.00															US 20 EAST
HARRISON AVE/US-20	2E-22	140+90	RT	INTERCHANGE ADVANCE	OVERHEAD STRUCTURE	216.00	120.00	180.00						1				2	2				I-90 TOLL I-39 US 51 TOLL NORTH 1/2 MILE
HARRISON AVE/US-20	2E-23	140+90	RT	INTERCHANGE EXIT DIRECTION	OVERHEAD STRUCTURE	240.00	108.00	180.00															US 20 WEST I-39 US 51 SOUTH
HARRISON AVE/US-20	W13-3	142+04	RT	ADVISORY EXIT RAMP SPEED - 40 MPH	WOOD POST	48.00	60.00	20.00		20.00													
HARRISON AVE/US-20	W4-1	144+92	LT	MERGE	WOOD POST	48.00	48.00	16.00		16.00													
HARRISON AVE/US-20	R2-1	147+97	LT	SPEED LIMIT - 45 MPH	WOOD POST	36.00	48.00	12.00		12.00													
HARRISON AVE/US-20	W4-1	148+95	RT	MERGE	WOOD POST	48.00	48.00	16.00		16.00													
HARRISON AVE/US-20	W13-3	149+67	LT	ADVISORY EXIT RAMP SPEED - 30 MPH	WOOD POST	48.00	60.00	20.00		20.00													
HARRISON AVE/US-20	R5-I100	150+77	LT	FREEWAY EXCLUSION SIGN	WOOD POST	48.00	60.00	20.00		20.00													
HARRISON AVE/US-20	2E-23	151+50	RT	INTERCHANGE EXIT DIRECTION	OVERHEAD STRUCTURE	198.00	90.00	123.75							1			1		1			I-90 TOLL I-39 US 51 TOLL NORTH
HARRISON AVE/US-20	R2-1	151+50	RT	SPEED LIMIT - 45 MPH	OVERHEAD STRUCTURE	36.00	48.00	12.00															
HARRISON AVE/US-20	2E-23	1312+99	LT	INTERCHANGE EXIT DIRECTION	OVERHEAD STRUCTURE	198.00	90.00	123.75							1			1		1			US 20 WEST I-39 US 51 SOUTH
HARRISON AVE/US-20	R2-1	1312+99	LT	SPEED LIMIT - 45 MPH	OVERHEAD STRUCTURE	36.00	48.00	12.00															
HARRISON AVE/US-20	R5-I100	1313+59	RT	FREEWAY EXCLUSION SIGN	WOOD POST	48.00	60.00	20.00		20.00													
HARRISON AVE/US-20	W13-3	1314+73	RT	ADVISORY EXIT RAMP SPEED - 30 MPH	WOOD POST	48.00	60.00	20.00		20.00													
HARRISON AVE/US-20	W4-1	1315+76	LT	MERGE	WOOD POST	48.00	48.00	16.00		16.00													

MODEL: Default
FILE NAME: pw://benesch-pw.bentley.com:benesch-pw-01/Documents/108006/108006.00/Eng_Docs/CAD_Sheets/General/D7264R71-2D1-sht-SCH-21.dgn

benesch
Alfred Benesch & Company
35 W. Wacker Drive, Suite 3300
Chicago, Illinois 60601
312.565.0450 Job No. 10800.00

USER NAME = mtoney	DESIGNED - A.GIBSON	REVISED -	
	DRAWN - J.MAJCHER	REVISED -	
PLOT SCALE = 0.167 ' / in.	CHECKED - J.TARDY	REVISED -	
PLOT DATE = 10/13/2023	DATE - 10/13/2023	REVISED -	

STATE OF ILLINOIS
DEPARTMENT OF TRANSPORTATION

SCHEDULE OF QUANTITIES
EXISTING SIGNING

SCALE: N/A | SHEET 38 OF 48 SHEETS | STA. | TO STA.

F.A.* RTE.	SECTION	COUNTY	TOTAL SHEETS	SHEET NO.
*	(5)RS & (5&5HB)RC	WINNEBAGO	1279	86
		CONTRACT NO. 64R71		
	ILLINOIS	FED. AID PROJECT		

* FAI ROUTE 39 (I-39) & FAP ROUTE 525 (US 20)

EXISTING SIGNS (REMOVALS, RELOCATIONS, & REINSTALLATIONS)																							
									72400310	72400320	72400330	72400710	72400730	73600100	73600200	73700100	73700200	73700300	73800005	73800010	X7200075	Z0051398	
LOCATION	SIGN CODE	STATION	LT/RT	DESCRIPTION	MOUNTING TYPE	SIGN PANEL WIDTH	SIGN PANEL HEIGHT	SIGN PANEL AREA	REMOVE SIGN PANEL - TYPE 1	REMOVE SIGN PANEL - TYPE 2	REMOVE SIGN PANEL - TYPE 3	RELOCATE SIGN PANEL - TYPE 1	RELOCATE SIGN PANEL - TYPE 3	REMOVE OH SIGN STRUCTURE - SPAN	REMOVE OH SIGN STRUCTURE - CANTILEVER	REMOVE GROUND MOUNTED SIGN SUPPORT	REMOVE CONCRETE FOUNDATION - GROUND MOUNT	REMOVE CONCRETE FOUNDATION - OVERHEAD	REMOVE STRUCTURAL STEEL SUPPORT FOR OVERHEAD SIGN STRUCTURE - SPAN	REMOVE STRUCTURAL STEEL SUPPORT FOR OVERHEAD SIGN STRUCTURE - CANTILEVER	REMOVE AND REINSTALL SIGN PANEL	REMOVE EXISTING SIGN POST	REMARKS
(ROAD)	(MUTCD or IDOT)	(STA)				(INCH)	(INCH)	(SQ FT)	(SQ FT)	(SQ FT)	(SQ FT)	(SQ FT)	(SQ FT)	(EACH)	(EACH)	(EACH)	(EACH)	(EACH)	(EACH)	(EACH)	(SQFT)	(EACH)	
HARRISON AVE/US-20	M1-1200	1319+93	RT	ROUTE/COUNTY/MILEAGE	TELESCOPING STEEL	18.00	18.00	2.30	2.30														20 / WINNEBAGO / 25
HARRISON AVE/US-20	M1-1200	1319+93	LT	ROUTE/COUNTY/MILEAGE	TELESCOPING STEEL	18.00	18.00	2.30	2.30														20 / WINNEBAGO / 25
HARRISON AVE/US-20	W4-1	1321+19	RT	MERGE	WOOD POST	48.00	48.00	16.00		16.00													
HARRISON AVE/US-20	R2-1	1325+04	RT	SPEED LIMIT - 45 MPH	WOOD POST	48.00	60.00	20.00		20.00													
HARRISON AVE/US-20	M3-1	1325+05	LT	CARDINAL DIRECTION - NORTH	WOOD POST	24.00	12.00	2.00	2.00														
HARRISON AVE/US-20	M4-5	1325+05	LT	TO	WOOD POST	24.00	12.00	2.00	2.00														
HARRISON AVE/US-20	M4-15	1325+05	LT	TOLL	WOOD POST	24.00	12.00	2.00	2.00														
HARRISON AVE/US-20	M4-15	1325+05	LT	TOLL	WOOD POST	24.00	12.00	2.00	2.00														
HARRISON AVE/US-20	M1-1	1325+05	LT	INTERSTATE ROUTE SIGN - I-39	WOOD POST	24.00	24.00	4.00	4.00														
HARRISON AVE/US-20	M1-1	1325+05	LT	INTERSTATE ROUTE SIGN - I-90	WOOD POST	24.00	24.00	4.00	4.00														
HARRISON AVE/US-20	M6-2	1325+05	LT	DIRECTIONAL ARROW	WOOD POST	21.00	15.00	2.20	2.20														
HARRISON AVE/US-20	R5-1100	1326+15	LT	FREEWAY EXCLUSION SIGN	WOOD POST	48.00	60.00	20.00		20.00													
HARRISON AVE/US-20	2E-23	1327+75	LT	PULL THROUGH	OVERHEAD STRUCTURE	144.00	96.00	96.00															ROCKFORD HARRISON AVE AHEAD
HARRISON AVE/US-20	2E-22	1327+75	LT	INTERCHANGE ADVANCE	OVERHEAD STRUCTURE	216.00	120.00	180.00						1				2	2				US 20 WEST I-39 US 51 SOUTH 1/2 MILE
HARRISON AVE/US-20	2E-23	1327+75	LT	INTERCHANGE EXIT DIRECTION	OVERHEAD STRUCTURE	240.00	108.00	180.00															I-90 TOLL I-39 US 51 TOLL NORTH
HARRISON AVE/US-20	W13-3	1331+13	LT	ADVISORY EXIT RAMP SPEED - 40 MPH	WOOD POST	48.00	60.00	20.00		20.00													
HARRISON AVE/US-20	W3-3	1333+24	RT	SIGNAL AHEAD	METAL POST	48.00	48.00	16.00	16.00														
HARRISON AVE/US-20	D3-1	1333+24	RT	STREET NAME	METAL POST	48.00	12.00	4.00	4.00														MILL RD
HARRISON AVE/US-20	W3-3	1333+24	RT	SIGNAL AHEAD	WOOD POST	48.00	48.00	16.00	16.00														
HARRISON AVE/US-20	D3-1	1333+24	RT	STREET NAME	WOOD POST	48.00	12.00	4.00	4.00														MILL RD
HARRISON AVE/US-20	D1-1a	1333+83	RT	DESTINATION	TELESCOPING STEEL	72.00	18.00	9.00	9.00														CHERRY VALLEY
HARRISON AVE/US-20	CUSTOM	1333+83	RT	CUSTOM	TELESCOPING STEEL	24.00	18.00	3.00													3.00		SHELL LOGO SIGN
HARRISON AVE/US-20	M6-1R	1333+83	RT	RIGHT ARROW	TELESCOPING STEEL	21.00	15.00	2.20	2.20														
HARRISON AVE/US-20	I-8	1335+92	RT	LIBRARY	TELESCOPING STEEL	24.00	24.00	4.00	4.00														
HARRISON AVE/US-20	M6-1R	1335+92	RT	RIGHT ARROW	TELESCOPING STEEL	21.00	15.00	2.20	2.20														
HARRISON AVE/US-20	R2-1	1336+21	LT	SPEED LIMIT - 45 MPH	TELESCOPING STEEL	36.00	48.00	12.00		12.00													
MALL DR	R1-1	297+44	LT	STOP	TELESCOPING STEEL	30.00	30.00	6.25	6.25														
MALL DR	R1-1	297+86	RT	STOP	TELESCOPING STEEL	30.00	30.00	6.25	6.25														
MALL DR	CUSTON	298+47	LT	WEIGHT LIMIT	TELESCOPING STEEL	24.00	12.00					2											APPROXIMATE SIZE AND STATION
COLUMN 10 SUBTOTALS									217	276	0	2	0	2	2	0	0	6	4	2	8	2	
TOTALS									913	416	763	2	120	3	5	12	12	11	6	5	45	2	

PROPOSED GROUND MOUNTED SIGNS

LOCATION	SIGN CODE	STATION	LT/RT	DESCRIPTION	MOUNTING TYPE	SIGN PANEL WIDTH	SIGN PANEL HEIGHT	SIGN PANEL AREA	POST ONE LENGTH	POST TWO LENGTH	72000100 SIGN PANEL - TYPE 1	72000200 SIGN PANEL - TYPE 2	72000300 SIGN PANEL - TYPE 3	72700100 STRUCTURAL STEEL SIGN SUPPORT BREAKAWAY WIDE FLANGE	72800100 TELESCOPING STEEL SIGN SUPPORT	73000100 WOOD SIGN SUPPORT	73400100 CONCRETE FOUNDATION	X7210010 SIGN PANEL OVERLAY (SPECIAL)	REMARKS
(ROAD)	(MUTCD or IDOT)	(STA)				(INCH)	(INCH)	(SQ FT)	(FOOT)	(FOOT)	(SQFT)	(SQFT)	(SQFT)	(POUND)	(FOOT)	(FOOT)	(CU YD)	(SQFT)	
I-39/US-20	CUSTOM	2631+79	RT	EXIT 121	OVERLAY	60.00	18.00	7.50										7.50	COVER OVER "EXIT 122B"
I-39/US-20	CUSTOM	2654+06	RT	EXIT 121	OVERLAY	84.00	18.00	10.50										10.50	COVER OVER "SECOND RIGHT"
I-39/US-20	CUSTOM	2662+17	RT	EXIT 121	OVERLAY	84.00	18.00	10.50										10.50	COVER OVER "NEXT RIGHT"
I-39/US-20	CUSTOM	2662+17	RT	BLANK - BLUE	OVERLAY	180.00	24.00	30.00										30.00	COVER OVER "SECOND RIGHT"
I-39/US-20	CUSTOM	2672+16	RT	EXIT 121	OVERLAY	108.00	30.00	22.50										22.50	COVER OVER "EXIT 122A"
I-39/US-20	CUSTOM	2672+16	RT	HARRISON AVE	OVERLAY	96.00	24.00	16.00										16.00	COVER OVER "BELVIDERE"
I-39/US-20	CUSTOM	2672+16	RT	3/4	OVERLAY	30.00	20.00	4.20										4.20	COVER OVER "1"
I-39/US-20	CUSTOM	2680+91	RT	EXIT 121	ABOVE EXISTING SIGN	144.00	30.00	30.00					30.00						MOUNT ABOVE EXISTING SIGN
I-39/US-20	CUSTOM	2680+91	RT	US 20 EAST	OVERLAY	144.00	30.00	30.00										30.00	COVER OVER "EXIT 122A"
I-39/US-20	CUSTOM	2680+91	RT	1/2	OVERLAY	30.00	20.00	4.20										4.20	COVER OVER "1"
I-39/US-20	2M-2	2703+00	RT	RECREATION GUIDE SIGN	WOOD POST	84.00	48.00	28.00	18.0	18.0			28.00			36			WATER PARK
I-39/US-20	CUSTOM	2710+00	RT	EXIT 121	OVERLAY	120.00	30.00	25.00										25.00	COVER OVER "EXIT 122A"
I-39/US-20	CUSTOM	2710+00	RT	HARRISON AVE	OVERLAY	96.00	24.00	16.00										16.00	COVER OVER "BELVIDERE"
I-39/US-20	CUSTOM	2710+00	RT	LAST EXIT BEFORE TOLLWAY	BELOW EXISTING SIGN	120.00	36.00	30.00					30.00						MOUNT BELOW EXISTING SIGN
I-39/US-20	2E-22	2710+00	RT	INTERCHANGE EXIT DIRECTION	BREAK-AWAY STEEL	120.00	144.00	120.00	*	*				1,786			4.18		EXIT 122A US 20 EAST
I-39/US-20	D10-5	2711+55	LT	INTERMEDIATE ENHANCED REFERENCE LOCATION	TELESCOPING STEEL	18.00	60.00	7.50	17.00						17				SOUTH I-39 MILE 121.6
I-39/US-20	W4-1	2712+11	LT	MERGE	WOOD POST	48.00	48.00	16.00	19.00			16.00				19			
I-39/US-20	W13-3	2714+08	RT	ADVISORY EXIT RAMP SPEED - 35 MPH	WOOD POST	48.00	60.00	20.00	19.00			20.00				19			
I-39/US-20	E5-1a	2716+54	RT	EXIT GORE	WOOD POST	78.00	60.00	32.50	18.00	18.00			32.50			36			EXIT 121
I-39/US-20	D10-5	2720+89	LT	INTERMEDIATE ENHANCED REFERENCE LOCATION	TELESCOPING STEEL	18.00	60.00	7.50	12.00						12				SOUTH I-39 MILE 121.8
I-39/US-20	D10-5	2722+24	RT	INTERMEDIATE ENHANCED REFERENCE LOCATION	TELESCOPING STEEL	18.00	60.00	7.50	12.00						12				NORTH I-39 MILE 121.8
I-39/US-20	W4-3	2731+38	RT	ADDED LANE	WOOD POST	48.00	48.00	16.00	19.00			16.00				19			
I-39/US-20	D10-4	2731+54	RT	ENHANCED REFERENCE LOCATION	TELESCOPING STEEL	18.00	54.00	6.80	12.00						12				NORTH I-39 MILE 122
I-39/US-20	E5-1a	2732+41	LT	EXIT GORE	WOOD POST	78.00	60.00	32.50	18.00	18.00			32.50			36			EXIT 121
I-39/US-20	W13-3	2738+85	RT	ADVISORY EXIT RAMP SPEED - 35 MPH	WOOD POST	48.00	60.00	20.00	19.00			20.00				19			
I-39/US-20	R3-4	2745+21	LT	NO U-TURN (SYMBOL)	WOOD POST	36.0	36.0	9.0	18.00		9.00					18			
I-39/US-20	R3-4	2745+21	LT	NO U-TURN (SYMBOL)	WOOD POST	36.0	36.0	9.0			9.00								
I-39/US-20	R3-I101	2745+21	LT	EXCEPT AUTHORIZED VEHICLES	WOOD POST	36.0	24.0	6.0			6.00								
I-39/US-20	R3-I101	2745+21	LT	EXCEPT AUTHORIZED VEHICLES	WOOD POST	36.0	24.0	6.0			6.00								
I-39/US-20	2M-2	2746+00	RT	RECREATION GUIDE SIGN	WOOD POST	84.00	48.00	28.00	18.00	18.0			28.00			36			WATER PARK
I-39/US-20	W4-1	2756+24	RT	MERGE	WOOD POST	48.00	48.00	16.00	18.00			16.00				18			
I-39/US-20	2E-22	2763+76	LT	INTERCHANGE ADVANCE	BREAK-AWAY STEEL	192.00	204.00	272.00	*	*			272.00	2,204			4.18		US 20 EAST 1/2 MILE
I-39/US-20	2E-22	2765+87	RT	INTERCHANGE ADVANCE	BREAK-AWAY STEEL	192.00	204.00	272.00	*	*			272.00	2,204			4.18		US 20 EAST 1/2 MILE

NOTES:
1. CONTRACTOR SHALL CONTACT TRAFFIC OPERATIONS AFTER FINAL GRADING AND LIGHTING IS COMPLETED TO DETERMINE THE FINAL LAYOUT OF THE SIGNS.
2. THE STEEL POSTS IN THE SCHEDULE ARE FOR BIDDING PURPOSES ONLY. EACH POST SIZE AND LENGTH SHALL BE PROVIDED AFTER FINAL GRADING IS COMPLETED.

PROPOSED GROUND MOUNTED SIGNS

LOCATION	SIGN CODE	STATION	LT/RT	DESCRIPTION	MOUNTING TYPE	SIGN PANEL WIDTH	SIGN PANEL HEIGHT	SIGN PANEL AREA	POST ONE LENGTH	POST TWO LENGTH	72000100 SIGN PANEL - TYPE 1	72000200 SIGN PANEL - TYPE 2	72000300 SIGN PANEL - TYPE 3	72700100 STRUCTURAL STEEL SIGN SUPPORT BREAKAWAY WIDE FLANGE	72800100 TELESCOPING STEEL SIGN SUPPORT	73000100 WOOD SIGN SUPPORT	73400100 CONCRETE FOUNDATION	X7210010 SIGN PANEL OVERLAY (SPECIAL)	REMARKS
(ROAD)	(MUTCD or IDOT)	(STA)				(INCH)	(INCH)	(SQ FT)	(FOOT)	(FOOT)	(SQFT)	(SQFT)	(SQFT)	(POUND)	(FOOT)	(FOOT)	(CU YD)	(SQFT)	
PR RAMP B	-	217+50	RT	FOOD - RAMP PANEL	BREAK-AWAY STEEL	150.00	96.00	100.00					100.00	1,520			4.18		
PR RAMP B	R5-1a	217+50	RT	WRONG WAY	BAND	42.00	30.00	8.80	*	*	8.80								
PR RAMP B	W1-8	217+50	LT	CHEVRON ALIGNMENT	WOOD POST	30.00	36.00	7.50	16.00		7.50					16			
PR RAMP B	R5-1a	217+50	LT	WRONG WAY	WOOD POST	42.00	30.00	8.80			8.80								
PR RAMP B	W1-8	219+00	LT	CHEVRON ALIGNMENT	WOOD POST	30.00	36.00	7.50	18.31							19			
PR RAMP B	-	219+50	RT	GAS / ATTRACTIONS - RAMP PANEL	BREAK-AWAY STEEL	150.00	120.00	125.00	*	*			125.00	1,672			4.18		
PR RAMP B	2M-2	220+80	LT	RECREATION GUIDE SIGN	WOOD POST	72.00	36.00	18.00	18.0	18.0			18.00			36			WATER PARK
PR RAMP B	W1-8	221+84	RT	CHEVRON ALIGNMENT	WOOD POST	30.00	36.00	7.50	16.00		7.50					16			
PR RAMP B	W3-3	222+50	RT	SIGNAL AHEAD	WOOD POST	36.00	36.00	9.00	18.00		9.00					18			
PR RAMP B	W3-3	222+50	LT	SIGNAL AHEAD	WOOD POST	36.00	36.00	9.00	18.00		9.00					18			
PR RAMP B	W1-8	223+00	RT	CHEVRON ALIGNMENT	WOOD POST	30.00	36.00	7.50	16.00		7.50					16			
PR RAMP B	W1-8	224+20	RT	CHEVRON ALIGNMENT	WOOD POST	30.00	36.00	7.50	16.00		7.50					16			
PR RAMP B	R5-1	225+80	RT	DO NOT ENTER	WOOD POST	48.00	48.00	16.00	17.00			16.00				17			
PR RAMP B	-	225+80	RT	RED STRIP	WOOD POST	48.00	2.00	0.70			0.70								
PR RAMP B	R5-1	225+80	LT	DO NOT ENTER	WOOD POST	48.00	48.00	16.00	17.00			16.00				17			
PR RAMP B	-	225+80	LT	RED STRIP	WOOD POST	48.00	2.00	0.70			0.70								
PR RAMP B	R10-11a	226+44	LT	NO TURN ON RED	BAND	36.00	36.00	9.00				9.00							
PR RAMP B	M3-2	226+65	RT	CARDINAL DIRECTION - EAST	WOOD POST	24.00	12.00	2.00	16.00		2.00					16			
PR RAMP B	M1-4	226+65	RT	U.S. ROUTE SIGN - US 20	WOOD POST	24.00	24.00	4.00			4.00								
PR RAMP B	M6-2R	226+65	RT	DIRECTIONAL ARROW	WOOD POST	21.00	15.00	2.20			2.20								
PR RAMP C	2M-2	310+00	RT	RECREATION GUIDE SIGN	WOOD POST	72.00	36.00	18.00	18.00	18.00			18.00			36			WATER PARK
PR RAMP C	R5-1a	310+00	RT	WRONG WAY	BAND	42.00	30.00	8.80			8.80								
PR RAMP C	W1-8	310+00	LT	CHEVRON ALIGNMENT	WOOD POST	30.00	36.00	7.50	16.00		7.50					16			
PR RAMP C	R5-1a	310+00	LT	WRONG WAY	WOOD POST	42.00	30.00	8.80			8.80								
PR RAMP C	W1-8	311+00	RT	CHEVRON ALIGNMENT	WOOD POST	30.00	36.00	7.50	16.00		7.50					16			
PR RAMP C	W3-3	312+60	RT	SIGNAL AHEAD	WOOD POST	36.00	36.00	9.00	16.00		9.00					16			
PR RAMP C	W1-8	314+50	RT	CHEVRON ALIGNMENT	WOOD POST	30.00	36.00	7.50	16.00		7.50					16			
PR RAMP C	W1-8	315+50	RT	CHEVRON ALIGNMENT	WOOD POST	30.00	36.00	7.50	16.00		7.50					16			
PR RAMP C	R5-1	317+30	RT	DO NOT ENTER	WOOD POST	48.00	48.00	16.00	17.00			16.00				17			
PR RAMP C	-	317+30	RT	RED STRIP	WOOD POST	48.00	2.00	0.70			0.70								
PR RAMP C	R5-1	317+30	LT	DO NOT ENTER	WOOD POST	48.00	48.00	16.00	17.00			16.00				17			
PR RAMP C	-	317+30	LT	RED STRIP	WOOD POST	48.00	2.00	0.70			0.70								
PR RAMP C	R10-11b	317+74	LT	NOT TURN ON RED	BAND	36.00	36.00	9.00			9.00								
PR RAMP C	M3-2	317+95	LT	CARDINAL DIRECTION - EAST	WOOD POST	24.00	12.00	2.00	16.00		2.00					16			
PR RAMP C	M1-4	317+95	LT	U.S. ROUTE SIGN - US 20	WOOD POST	24.00	24.00	4.00			4.00								
PR RAMP C	M6-2L	317+95	LT	DIRECTIONAL ARROW	WOOD POST	21.00	15.00	2.20			2.20								
PR RAMP D	R5-I100	401+80	RT	FREEWAY EXCLUSION SIGN	WOOD POST	48.00	60.00	20.00	20.50			20.00				21			
PR RAMP D	W9-1	403+00	RT	RIGHT LANE ENDS	WOOD POST	36.00	36.00	9.00	17.00		9.00					17			
PR RAMP D	W9-1	403+00	LT	RIGHT LANE ENDS	WOOD POST	36.00	36.00	9.00	17.00		9.00					17			
PR RAMP D	W4-2R	404+50	RT	MERGE	WOOD POST	36.00	36.00	9.00	17.00		9.00					17			
PR RAMP D	W4-2R	404+50	LT	MERGE	WOOD POST	36.00	36.00	9.00	17.00		9.00					17			
										COLUMN 9 SUBTOTALS	253	201	986	9,386	53	807	21	177	

NOTES:
1. CONTRACTOR SHALL CONTACT TRAFFIC OPERATIONS AFTER FINAL GRADING AND LIGHTING IS COMPLETED TO DETERMINE THE FINAL LAYOUT OF THE SIGNS.
2. THE STEEL POSTS IN THE SCHEDULE ARE FOR BIDDING PURPOSES ONLY. EACH POST SIZE AND LENGTH SHALL BE PROVIDED AFTER FINAL GRADING IS COMPLETED.

MODEL: Default
FILE NAME: pw://benesch-pw.bentley.com:benesch-pw-01/Documents/10800s/10800.00/Eng_Docs/CAD Sheets/General/D264R71-DDI-sht-SCH-24.dgn

benesch
Allied Benesch & Company
35 W. Wacker Drive, Suite 3300
Chicago, Illinois 60601
312-565-0450 Job No. 10800.00

USER NAME = mtoney	DESIGNED - A.GIBSON	REVISED -	STATE OF ILLINOIS DEPARTMENT OF TRANSPORTATION	**SCHEDULE OF QUANTITIES PROPOSED GROUND SIGNING**
	DRAWN - J.MAJCHER	REVISED -		
PLOT SCALE = 0.167 ' / In.	CHECKED - J.TARDY	REVISED -		
PLOT DATE = 10/13/2023	DATE - 10/13/2023	REVISED -		SCALE: N/A SHEET 41 OF 48 SHEETS STA. TO STA.

F.A.* RTE.	SECTION	COUNTY	TOTAL SHEETS	SHEET NO.
*	(5)RS & (5&5HB)RC	WINNEBAGO	1279	89
		CONTRACT NO. 64R71		
	ILLINOIS	FED. AID PROJECT		

* FAI ROUTE 39 (I-39) & FAP ROUTE 525 (US 20)

PROPOSED GROUND MOUNTED SIGNS

LOCATION	SIGN CODE	STATION	LT/RT	DESCRIPTION	MOUNTING TYPE	SIGN PANEL WIDTH	SIGN PANEL HEIGHT	SIGN PANEL AREA	POST ONE LENGTH	POST TWO LENGTH	72000100 SIGN PANEL - TYPE 1	72000200 SIGN PANEL - TYPE 2	72000300 SIGN PANEL - TYPE 3	72700100 STRUCTURAL STEEL SIGN SUPPORT BREAKAWAY WIDE FLANGE	72800100 TELESCOPING STEEL SIGN SUPPORT	73000100 WOOD SIGN SUPPORT	73400100 CONCRETE FOUNDATION	X7210010 SIGN PANEL OVERLAY (SPECIAL)	REMARKS
(ROAD)	(MUTCD or IDOT)	(STA)				(INCH)	(INCH)	(SQ FT)	(FOOT)	(FOOT)	(SQFT)	(SQFT)	(SQFT)	(POUND)	(FOOT)	(FOOT)	(CU YD)	(SQFT)	
HARRISON AVE	R2-1	124+18	LT	SPEED LIMIT - 45 MPH	WOOD POST	30.00	36.00	7.50	17.00		7.50					17			
HARRISON AVE	D3-1	125+80	RT	STREET NAME - HARRISON AVE	BAND	72.00	18.00	9.00			9.00								MOUNTED ON MA-4
HARRISON AVE	R10-27a	125+80	RT	LEFT TURN YIELD ON FLASHING YELLOW ARROW	BAND	30.00	36.00	7.50			7.50								MOUNTED ON MA-4
HARRISON AVE	D3-1	125+91	LT	STREET NAME - S MALL DR	BAND	60.00	18.00	7.50			7.50								MOUNTED ON MA-3
HARRISON AVE	R10-5	125+91	LT	LEFT ON GREEN ARROW ONLY	BAND	30.00	36.00	7.50			7.50								MOUNTED ON MA-3
HARRISON AVE	D3-1	126+60	RT	STREET NAME - S MALL DR	BAND	60.00	18.00	7.50			7.50								MOUNTED ON MA-1
HARRISON AVE	R10-5	126+60	RT	LEFT ON GREEN ARROW ONLY	BAND	30.00	36.00	7.50			7.50								MOUNTED ON MA-1
HARRISON AVE	D3-1	126+61	LT	STREET NAME - HARRISON AVE	BAND	72.00	18.00	9.00			9.00								MOUNTED ON MA-2
HARRISON AVE	R10-27a	126+61	LT	LEFT TURN YIELD ON FLASHING YELLOW ARROW	BAND	30.00	36.00	7.50			7.50								MOUNTED ON MA-2
HARRISON AVE	R10-3e	127+09	RT	PEDESTRIAN SIGN - LT ARROW	BAND	9.00	15.00	0.94			0.94								MOUNTED ON TSP-1
HARRISON AVE	R10-3e	127+12	LT	PEDESTRIAN SIGN - RT ARROW	BAND	9.00	15.00	0.94			0.94								MOUNTED ON TSP-2
HARRISON AVE	D11-1	127+47	RT	BIKE ROUTE	TELESCOPING STEEL	24.00	18.00	3.00	16.00		3.00				16				
HARRISON AVE	M6-4	127+47	RT	BICYCLE ROUTE ARROW SIGN	TELESCOPING STEEL	12.00	9.00	0.80			0.80								
HARRISON AVE	R2-1	128+00	LT	SPEED LIMIT - 45 MPH	WOOD POST	36.00	48.00	12.00	17.00			12.00				17			
HARRISON AVE	M2-1	130+40	RT	JUNCTION (BLUE)	WOOD POST	21.00	15.00	2.20	16.00	17.00	2.20					33			
HARRISON AVE	M2-1	130+40	RT	JUNCTION (WHITE)	WOOD POST	21.00	15.00	2.20			2.20								
HARRISON AVE	M2-1	130+40	RT	JUNCTION (WHITE)	WOOD POST	21.00	15.00	2.20			2.20								
HARRISON AVE	M1-1	130+40	RT	INTERSTATE ROUTE SIGN - I-39	WOOD POST	24.00	24.00	4.00			4.00								
HARRISON AVE	M1-4	130+40	RT	U.S. ROUTE SIGN - US 51	WOOD POST	24.00	24.00	4.00			4.00								
HARRISON AVE	M1-4	130+40	RT	U.S. ROUTE SIGN - US 20	WOOD POST	24.00	24.00	4.00			4.00								
HARRISON AVE	R3-7R	131+12	LT	RIGHT LANE MUST TURN RIGHT	WOOD POST	36.00	36.00	9.00	16.00		9.00					16			
HARRISON AVE	M3-3	132+80	RT	SOUTH (BLUE)	WOOD POST	24.00	12.00	2.00	17.00	18.00	2.00					35			
HARRISON AVE	M3-3	132+80	RT	SOUTH (WHITE)	WOOD POST	24.00	12.00	2.00			2.00								
HARRISON AVE	M3-4	132+80	RT	WEST (WHITE)	WOOD POST	24.00	12.00	2.00			2.00								
HARRISON AVE	M1-1	132+80	RT	INTERSTATE ROUTE SIGN - I-39	WOOD POST	24.00	24.00	4.00			4.00								
HARRISON AVE	M1-4	132+80	RT	U.S. ROUTE SIGN - US 51	WOOD POST	24.00	24.00	4.00			4.00								
HARRISON AVE	M1-4	132+80	RT	U.S. ROUTE SIGN - US 20	WOOD POST	24.00	24.00	4.00			4.00								
HARRISON AVE	M5-2R	132+80	RT	DIRECTIONAL ARROW (BLUE)	WOOD POST	21.00	15.00	2.20			2.20								
HARRISON AVE	M5-2R	132+80	RT	DIRECTIONAL ARROW (WHITE)	WOOD POST	21.00	15.00	2.20			2.20								
HARRISON AVE	M5-2R	132+80	RT	DIRECTIONAL ARROW (WHITE)	WOOD POST	21.00	15.00	2.20			2.20								
HARRISON AVE	CUSTOM	133+42	LT	CUSTOM	TELESCOPING STEEL	24.00	24.00	4.00	16.00						16				
HARRISON AVE	M6-1R	133+42	RT	RIGHT ARROW	TELESCOPING STEEL	21.00	15.00	2.20			2.20								

NOTES:
1. CONTRACTOR SHALL CONTACT TRAFFIC OPERATIONS AFTER FINAL GRADING AND LIGHTING IS COMPLETED TO DETERMINE THE FINAL LAYOUT OF THE SIGNS.
2. THE STEEL POSTS IN THE SCHEDULE ARE FOR BIDDING PURPOSES ONLY. EACH POST SIZE AND LENGTH SHALL BE PROVIDED AFTER FINAL GRADING IS COMPLETED.

MODEL: Default
FILE NAME: pw:\benesch-pw.bentley.com:benesch-pw-01\Documents\10800s\10800\00\Eng. Docs\CAD Sheets\General\D264R71-GDI-sht-SCH-25.dgn

benesch
Alfred Benesch & Company
35 W. Wacker Drive, Suite 3300
Chicago, Illinois 60601
312-565-0450 Job No. 10800.00

USER NAME = mtoney	DESIGNED - A.GIBSON	REVISED -	
	DRAWN - J.MAJCHER	REVISED -	
PLOT SCALE = 0.167 ' / In.	CHECKED - J.TARDY	REVISED -	
PLOT DATE = 10/13/2023	DATE - 10/13/2023	REVISED -	

STATE OF ILLINOIS
DEPARTMENT OF TRANSPORTATION

SCHEDULE OF QUANTITIES
PROPOSED GROUND SIGNING

SCALE: N/A | SHEET 42 OF 48 SHEETS | STA. | TO STA.

F.A.* RTE.	SECTION	COUNTY	TOTAL SHEETS	SHEET NO.
*	(5)RS & (5&5HB)RC	WINNEBAGO	1279	90
		CONTRACT NO. 64R71		
	ILLINOIS	FED. AID PROJECT		

* FAI ROUTE 39 (I-39) & FAP ROUTE 525 (US 20)

PROPOSED GROUND MOUNTED SIGNS

LOCATION	SIGN CODE	STATION	LT/RT	DESCRIPTION	MOUNTING TYPE	SIGN PANEL WIDTH	SIGN PANEL HEIGHT	SIGN PANEL AREA	POST ONE LENGTH	POST TWO LENGTH	72000100 SIGN PANEL - TYPE 1	72000200 SIGN PANEL - TYPE 2	72000300 SIGN PANEL - TYPE 3	72700100 STRUCTURAL STEEL SIGN SUPPORT BREAKAWAY WIDE FLANGE	72800100 TELESCOPING STEEL SIGN SUPPORT	73000100 WOOD SIGN SUPPORT	73400100 CONCRETE FOUNDATION	X7210010 SIGN PANEL OVERLAY (SPECIAL)	REMARKS
(ROAD)	(MUTCD or IDOT)	(STA)				(INCH)	(INCH)	(SQ FT)	(FOOT)	(FOOT)	(SQFT)	(SQFT)	(SQFT)	(POUND)	(FOOT)	(FOOT)	(CU YD)	(SQFT)	
HARRISON AVE	M4-15	135+22	RT	TOLL	WOOD POST	24.00	12.00	2.00	17.00	18.00	2.00					35			
HARRISON AVE	M4-15	135+22	RT	TOLL	WOOD POST	24.00	12.00	2.00			2.00								
HARRISON AVE	M4-5	135+22	RT	TO (BLUE)	WOOD POST	24.00	12.00	2.00			2.00								
HARRISON AVE	M3-1	135+22	RT	NORTH (BLUE)	WOOD POST	24.00	12.00	2.00			2.00								
HARRISON AVE	M3-1	135+22	RT	NORTH (WHITE)	WOOD POST	24.00	12.00	2.00			2.00								
HARRISON AVE	M4-15	135+22	RT	TOLL	WOOD POST	24.00	12.00	2.00			2.00								
HARRISON AVE	M1-1	135+22	RT	INTERSTATE ROUTE SIGN - I-39	WOOD POST	24.00	24.00	4.00			4.00								
HARRISON AVE	M1-4	135+22	RT	U.S. ROUTE SIGN - US 51	WOOD POST	24.00	24.00	4.00			4.00								
HARRISON AVE	M1-1	135+22	RT	INTERSTATE ROUTE SIGN - I-90	WOOD POST	24.00	24.00	4.00			4.00								
HARRISON AVE	M5-4	135+22	RT	LEFT LANE (BLUE)	WOOD POST	24.00	18.00	3.00			3.00								
HARRISON AVE	M5-4	135+22	RT	LEFT LANE (WHITE)	WOOD POST	24.00	18.00	3.00			3.00								
HARRISON AVE	M5-4	135+22	RT	LEFT LANE (BLUE)	WOOD POST	24.00	18.00	3.00			3.00								
HARRISON AVE	W3-3	135+61	LT	SIGNAL AHEAD	TELESCOPING STEEL	36.00	36.00	9.00	18.00		9.00				18				
HARRISON AVE	D3-1	135+61	LT	STREET NAME	TELESCOPING STEEL	36.00	9.00	2.30			2.30								S MALL DR
HARRISON AVE	WSPC	137+60	RT	RIGHT LANE MUST TURN RIGHT	WOOD POST	36.00	36.00	9.00	17.00		9.00					17			
HARRISON AVE	WSPC	138+00	LT	RIGHT LANE MUST TURN RIGHT	WOOD POST	36.00	36.00	9.00	17.00		9.00					17			
HARRISON AVE	W3-5	140+00	RT	REDUCED SPEED LIMIT AHEAD - 35 MPH	WOOD POST	36.00	36.00	9.00	17.00		9.00					17			WITH FLAG
HARRISON AVE	R3-7R	143+45	RT	RIGHT LANE MUST TURN RIGHT	WOOD POST	36.00	36.00	9.00	16.00		9.00					16			
HARRISON AVE	R2-1	145+05	LT	SPEED LIMIT - 45 MPH	WOOD POST	30.00	36.00	7.50	16.00		7.50					16			
HARRISON AVE	R2-1	145+05	M	SPEED LIMIT - 45 MPH	TELESCOPING STEEL	30.00	36.00	7.50	14.00		7.50				14				FACE EAST
HARRISON AVE	R2-1	145+05	M	SPEED LIMIT - 35 MPH	TELESCOPING STEEL	30.00	36.00	7.50			7.50								FACE WEST
HARRISON AVE	R2-1	145+05	RT	SPEED LIMIT - 35 MPH	WOOD POST	30.00	36.00	7.50	16.00		7.50					16			WITH FLAG
HARRISON AVE	R3-3	147+29	RT	NO TURNS	BAND	36.00	36.00	9.00			9.00								MOUNTED ON MA-5
HARRISON AVE	R4-7	147+32	RT	KEEP RIGHT	BAND	36.00	48.00	12.00				12.00							FACE EAST
HARRISON AVE	R3-3	147+32	RT	NO TURNS	BAND	24.00	24.00	4.00			4.00								FACE WEST
HARRISON AVE	D3-1	147+67	LT	STREET NAME - HARRISON AVE	BAND	72.00	18.00	9.00			9.00								MOUNTED ON MA-6
HARRISON AVE	R10-11b	147+67	LT	NO TURN ON RED	BAND	36.00	36.00	9.00			9.00								MOUNTED ON MA-6
HARRISON AVE	W4-1	147+69	LT	ADDED LANE FROM RIGHT	BAND	36.00	36.00	9.00				9.00							
HARRISON AVE	R5-1	147+84	RT	DO NOT ENTER	BAND	36.00	36.00	9.00	16.00		9.00					16			
HARRISON AVE	M3-3	147+94	RT	SOUTH (BLUE)	WOOD POST	24.00	12.00	2.00	16.00	16.00	2.00					32			
HARRISON AVE	M3-3	147+94	RT	SOUTH (WHITE)	WOOD POST	24.00	12.00	2.00			2.00								
HARRISON AVE	M3-4	147+94	RT	WEST (WHITE)	WOOD POST	24.00	12.00	2.00			2.00								
HARRISON AVE	M1-1	147+94	RT	INTERSTATE ROUTE SIGN - I-39	WOOD POST	24.00	24.00	4.00			4.00								
HARRISON AVE	M1-4	147+94	RT	U.S. ROUTE SIGN - US 51	WOOD POST	24.00	24.00	4.00			4.00								
HARRISON AVE	M1-4	147+94	RT	U.S. ROUTE SIGN - US 20	WOOD POST	24.00	24.00	4.00			4.00								
HARRISON AVE	M6-2R	147+94	RT	DIRECTIONAL ARROW (BLUE)	WOOD POST	21.00	15.00	2.20			2.20								
HARRISON AVE	M6-2R	147+94	RT	DIRECTIONAL ARROW (WHITE)	WOOD POST	21.00	15.00	2.20			2.20								
HARRISON AVE	M6-2R	147+94	RT	DIRECTIONAL ARROW (WHITE)	WOOD POST	21.00	15.00	2.20			2.20								

NOTES:
1. CONTRACTOR SHALL CONTACT TRAFFIC OPERATIONS AFTER FINAL GRADING AND LIGHTING IS COMPLETED TO DETERMINE THE FINAL LAYOUT OF THE SIGNS.
2. THE STEEL POSTS IN THE SCHEDULE ARE FOR BIDDING PURPOSES ONLY. EACH POST SIZE AND LENGTH SHALL BE PROVIDED AFTER FINAL GRADING IS COMPLETED.

PROPOSED GROUND MOUNTED SIGNS

LOCATION	SIGN CODE	STATION	LT/RT	DESCRIPTION	MOUNTING TYPE	SIGN PANEL WIDTH	SIGN PANEL HEIGHT	SIGN PANEL AREA	POST ONE LENGTH	POST TWO LENGTH	72000100 SIGN PANEL - TYPE 1	72000200 SIGN PANEL - TYPE 2	72000300 SIGN PANEL - TYPE 3	72700100 STRUCTURAL STEEL SIGN SUPPORT BREAKAWAY WIDE FLANGE	72800100 TELESCOPING STEEL SIGN SUPPORT	73000100 WOOD SIGN SUPPORT	73400100 CONCRETE FOUNDATION	X7210010 SIGN PANEL OVERLAY (SPECIAL)	REMARKS
(ROAD)	(MUTCD or IDOT)	(STA)				(INCH)	(INCH)	(SQ FT)	(FOOT)	(FOOT)	(SQFT)	(SQFT)	(SQFT)	(POUND)	(FOOT)	(FOOT)	(CU YD)	(SQFT)	
HARRISON AVE	R3-1	147+99	RT	NO TURNS	WOOD POST	24.00	24.00	4.00	15.00		4.00					15			
HARRISON AVE	R10-3e	148+03	LT	PEDESTRIAN SIGN - RT ARROW	BAND	9.00	15.00	0.94			0.94								MOUNTED ON TSP-6
HARRISON AVE	R3-2	148+09	RT	NO TURNS	WOOD POST	24.00	24.00	4.00	15.00		4.00					15			
HARRISON AVE	R10-3e	148+13	LT	PEDESTRIAN SIGN - LT ARROW	BAND	9.00	15.00	0.94			0.94								MOUNTED ON TSP-5
HARRISON AVE	R3-3	148+26	RT	NO TURNS	WOOD POST	24.00	24.00	4.00	15.00		4.00					15			
HARRISON AVE	R3-3	148+26	RT	NO TURNS	WOOD POST	24.00	24.00	4.00			4.00								
HARRISON AVE	R5-1	148+70	RT	DO NOT ENTER	BAND	36.00	36.00	9.00			9.00								
HARRISON AVE	M3-3	148+80	RT	SOUTH (BLUE)	WOOD POST	24.00	12.00	2.00	16.00	16.00	2.00					32			
HARRISON AVE	M3-3	148+80	RT	SOUTH (WHITE)	WOOD POST	24.00	12.00	2.00			2.00								
HARRISON AVE	M3-4	148+80	RT	WEST (WHITE)	WOOD POST	24.00	12.00	2.00			2.00								
HARRISON AVE	M1-1	148+80	RT	INTERSTATE ROUTE SIGN - I-39	WOOD POST	24.00	24.00	4.00			4.00								
HARRISON AVE	M1-4	148+80	RT	U.S. ROUTE SIGN - US 51	WOOD POST	24.00	24.00	4.00			4.00								
HARRISON AVE	M1-4	148+80	RT	U.S. ROUTE SIGN - US 20	WOOD POST	24.00	24.00	4.00			4.00								
HARRISON AVE	M6-2L	148+80	RT	DIRECTIONAL ARROW (BLUE)	WOOD POST	21.00	15.00	2.20			2.20								
HARRISON AVE	M6-2L	148+80	RT	DIRECTIONAL ARROW (WHITE)	WOOD POST	21.00	15.00	2.20			2.20								
HARRISON AVE	M6-2L	148+80	RT	DIRECTIONAL ARROW (WHITE)	WOOD POST	21.00	15.00	2.20			2.20								
HARRISON AVE	R10-3e	148+87	LT	PEDESTRIAN SIGN - RT ARROW	BAND	9.00	15.00	0.94			0.94								MOUNTED ON TSP-7
HARRISON AVE	R4-8	149+00	RT	KEEP LEFT	BAND	36.00	48.00	12.00				12.00							FACE WEST
HARRISON AVE	R3-3	149+00	RT	NO TURNS	BAND	24.00	24.00	4.00			4.00								FACE EAST
HARRISON AVE	R3-3	149+00	LT	NO TURNS	BAND	36.00	36.00	9.00			9.00								MOUNTED ON MA-8
HARRISON AVE	R10-3e	149+32	LT	PEDESTRIAN SIGN - RT ARROW	BAND	9.00	15.00	0.94			0.94								MOUNTED ON TSP-8
HARRISON AVE	D3-1	149+33	LT	STREET NAME - EAST US 20	BAND	69.00	18.00	8.63			8.63								MOUNTED ON MA-7
HARRISON AVE	R10-11b	149+33	LT	NO TURN ON RED	BAND	36.00	36.00	9.00			9.00								MOUNTED ON MA-7
HARRISON AVE	R10-11b	149+33	LT	NOT TURN ON RED	BAND	36.00	36.00	9.00			9.00								
HARRISON AVE	R6-1L	149+33	LT	ONE WAY ENCLOSED IN LEFT ARROW	BAND	36.00	12.00	3.00			3.00								
HARRISON AVE	R6-1L	149+80	LT	ONE WAY ENCLOSED IN LEFT ARROW	WOOD POST	36.00	12.00	3.00	15.00		3.00					15			
HARRISON AVE	R2-1	150+33	LT	SPEED LIMIT - 35 MPH	WOOD POST	30.00	36.00	7.50	15.00		7.50					15			
HARRISON AVE	R2-1	150+33	LT	SPEED LIMIT - 35 MPH	BAND	30.00	36.00	7.50			7.50								
HARRISON AVE	R5-1a	151+05	RT	WRONG WAY	WOOD POST	42.00	30.00	8.80	18.00		8.80					18			
HARRISON AVE	R5-1a	151+16	RT	WRONG WAY	WOOD POST	42.00	30.00	8.80	18.00		8.80					18			
HARRISON AVE	E11-2	152+25	LT	LEFT	BREAK-AWAY STEEL	36.00	18.00	4.50	*	*	4.50			1,406			4.18		
HARRISON AVE	2E-23	152+25	LT	INTERCHANGE EXIT DIRECTION	BREAK-AWAY STEEL	216.00	84.00	126.00					126.00						I-39 US 51 TOLL NORTH I-90 TOLL

NOTES:
1. CONTRACTOR SHALL CONTACT TRAFFIC OPERATIONS AFTER FINAL GRADING AND LIGHTING IS COMPLETED TO DETERMINE THE FINAL LAYOUT OF THE SIGNS.
2. THE STEEL POSTS IN THE SCHEDULE ARE FOR BIDDING PURPOSES ONLY. EACH POST SIZE AND LENGTH SHALL BE PROVIDED AFTER FINAL GRADING IS COMPLETED.

MODEL: Default
FILE NAME: pw://benesch-pw.bentley.com:benesch-pw-01/Documents/10800s/10800,00/Eng_Docs/CAD Sheets/General/D264R71-DDI-sht-SCH-27.dgn

benesch
Alfred Benesch & Company
35 W. Wacker Drive, Suite 3300
Chicago, Illinois 60601
312-565-0450 Job No. 10800.00

USER NAME = mtoney	DESIGNED - A.GIBSON	REVISED -	
	DRAWN - J.MAJCHER	REVISED -	
PLOT SCALE = 0.167 ' / In.	CHECKED - J.TARDY	REVISED -	
PLOT DATE = 10/13/2023	DATE - 10/13/2023	REVISED -	

STATE OF ILLINOIS
DEPARTMENT OF TRANSPORTATION

SCHEDULE OF QUANTITIES
PROPOSED GROUND SIGNING

SCALE: N/A | SHEET 44 OF 48 SHEETS | STA. | TO STA.

F.A.* RTE.	SECTION	COUNTY	TOTAL SHEETS	SHEET NO.
*	(5)RS & (5&5HB)RC	WINNEBAGO	1279	92
		CONTRACT NO. 64R71		
	ILLINOIS	FED. AID PROJECT		

* FAI ROUTE 39 (I-39) & FAP ROUTE 525 (US 20)

PROPOSED GROUND MOUNTED SIGNS

LOCATION	SIGN CODE	STATION	LT/RT	DESCRIPTION	MOUNTING TYPE	SIGN PANEL WIDTH	SIGN PANEL HEIGHT	SIGN PANEL AREA	POST ONE LENGTH	POST TWO LENGTH	72000100 SIGN PANEL - TYPE 1	72000200 SIGN PANEL - TYPE 2	72000300 SIGN PANEL - TYPE 3	72700100 STRUCTURAL STEEL SIGN SUPPORT BREAKAWAY WIDE FLANGE	72800100 TELESCOPING STEEL SIGN SUPPORT	73000100 WOOD SIGN SUPPORT	73400100 CONCRETE FOUNDATION	X7210010 SIGN PANEL OVERLAY (SPECIAL)	REMARKS
(ROAD)	(MUTCD or IDOT)	(STA)				(INCH)	(INCH)	(SQ FT)	(FOOT)	(FOOT)	(SQFT)	(SQFT)	(SQFT)	(POUND)	(FOOT)	(FOOT)	(CU YD)	(SQFT)	
US-20	R2-1	1313+57	RT	SPEED LIMIT - 35 MPH	BAND	30.00	36.00	7.50			7.50								
US-20	R2-1	1313+65	RT	SPEED LIMIT - 35 MPH	WOOD POST	30.00	36.00	7.50	15.00		7.50					15			
US-20	R5-1a	1313+51	RT	WRONG WAY	BAND	42.00	30.00	8.80			8.80								
US-20	R5-1a	1313+58	RT	WRONG WAY	WOOD POST	42.00	30.00	8.80	14.00		8.80					14			
US-20	R6-1L	1314+05	RT	ONE WAY ENCLOSED IN LEFT ARROW	WOOD POST	36.00	12.00	3.00	13.00		3.00					13			
US-20	R10-11b	1314+75	RT	NO TURN ON RED	BAND	36.00	36.00	9.00			9.00								
US-20	R6-1L	1314+75	RT	ONE WAY ENCLOSED IN LEFT ARROW	BAND	36.00	12.00	3.00			3.00								
US-20	D3-1	1314+75	RT	STREET NAME - HARRISON AVE	BAND	72.00	18.00	9.00			9.00								MOUNTED ON MA-11
US-20	R10-11b	1314+75	RT	NO TURN ON RED	BAND	36.00	36.00	9.00			9.00								MOUNTED ON MA-11
US-20	R10-3e	1314+97	LT	PEDESTRIAN SIGN - RT ARROW	BAND	9.00	15.00	0.94			0.94								MOUNTED ON TSP-12
US-20	M4-15	1315+05	LT	TOLL	WOOD POST	24.00	12.00	2.00			2.00								
US-20	M4-15	1315+05	LT	TOLL	WOOD POST	24.00	12.00	2.00			2.00								
US-20	M4-5	1315+05	LT	TO (BLUE)	WOOD POST	24.00	12.00	2.00			2.00								
US-20	M3-1	1315+05	LT	NORTH (BLUE)	WOOD POST	24.00	12.00	2.00			2.00								
US-20	M3-1	1315+05	LT	NORTH (WHITE)	WOOD POST	24.00	12.00	2.00			2.00								
US-20	M4-15	1315+05	LT	TOLL	WOOD POST	24.00	12.00	2.00			2.00								
US-20	M1-1	1315+05	LT	INTERSTATE ROUTE SIGN - I-39	WOOD POST	24.00	24.00	4.00	16.00	16.00	4.00					32			
US-20	M1-4	1315+05	LT	U.S. ROUTE SIGN - US 51	WOOD POST	24.00	24.00	4.00			4.00								
US-20	M1-1	1315+05	LT	INTERSTATE ROUTE SIGN - I-90	WOOD POST	24.00	24.00	4.00			4.00								
US-20	M6-2L	1315+05	LT	DIRECTIONAL ARROW (BLUE)	WOOD POST	21.00	15.00	2.20			2.20								
US-20	M6-2L	1315+05	LT	DIRECTIONAL ARROW (WHITE)	WOOD POST	21.00	15.00	2.20			2.20								
US-20	M6-2L	1315+05	LT	DIRECTIONAL ARROW (BLUE)	WOOD POST	21.00	15.00	2.20			2.20								
US-20	R10-3e	1315+21	LT	PEDESTRIAN SIGN - RT ARROW	BAND	9.00	15.00	0.94			0.94								MOUNTED ON TSP-11
US-20	R3-3	1315+43	LT	NO TURNS	BAND	36.00	36.00	9.00			9.00								MOUNTED ON MA-10
US-20	R4-8	1315+43	LT	KEEP LEFT	BAND	36.00	48.00	12.00				12.00							FACE EAST
US-20	R3-3	1315+43	LT	NO TURNS	BAND	24.00	24.00	4.00			4.00								FACE WEST
US-20	R5-1	1315+59	LT	DO NOT ENTER	BAND	36.00	36.00	9.00			9.00								
US-20	R3-3	1316+16	LT	NO TURNS	WOOD POST	24.00	24.00	4.00	14.00		4.00					14			
US-20	R3-3	1316+22	LT	NO TURNS	WOOD POST	24.00	24.00	4.00	14.00		4.00					14			
US-20	R10-3e	1316+34	LT	PEDESTRIAN SIGN - RT ARROW	BAND	9.00	15.00	0.94			0.94								MOUNTED ON TSP-13
US-20	R3-3	1316+37	RT	NO TURNS	WOOD POST	24.00	24.00	4.00	14.00		4.00					14			
US-20	R3-3	1316+37	RT	NO TURNS	WOOD POST	24.00	24.00	4.00			4.00								
US-20	R5-1	1316+47	LT	DO NOT ENTER	BAND	36.00	36.00	9.00			9.00								
US-20	M4-15	1316+55	LT	TOLL	WOOD POST	24.00	12.00	2.00			2.00								
US-20	M4-15	1316+55	LT	TOLL	WOOD POST	24.00	12.00	2.00			2.00								
US-20	M4-5	1316+55	LT	TO (BLUE)	WOOD POST	24.00	12.00	2.00			2.00								
US-20	M3-1	1316+55	LT	NORTH (BLUE)	WOOD POST	24.00	12.00	2.00			2.00								
US-20	M3-1	1316+55	LT	NORTH (WHITE)	WOOD POST	24.00	12.00	2.00			2.00								
US-20	M4-15	1316+55	LT	TOLL	WOOD POST	24.00	12.00	2.00			2.00								
US-20	M1-1	1316+55	LT	INTERSTATE ROUTE SIGN - I-39	WOOD POST	24.00	24.00	4.00	16.00	16.00	4.00					32			
US-20	M1-4	1316+55	LT	U.S. ROUTE SIGN - US 51	WOOD POST	24.00	24.00	4.00			4.00								
US-20	M1-1	1316+55	LT	INTERSTATE ROUTE SIGN - I-90	WOOD POST	24.00	24.00	4.00			4.00								
US-20	M6-2R	1316+55	LT	DIRECTIONAL ARROW (BLUE)	WOOD POST	21.00	15.00	2.20			2.20								
US-20	M6-2R	1316+55	LT	DIRECTIONAL ARROW (WHITE)	WOOD POST	21.00	15.00	2.20			2.20								
US-20	M6-2R	1316+55	LT	DIRECTIONAL ARROW (BLUE)	WOOD POST	21.00	15.00	2.20			2.20								
US-20	R10-3e	1316+61	LT	PEDESTRIAN SIGN - RT ARROW	BAND	9.00	15.00	0.94			0.94								MOUNTED ON TSP-14
US-20	R3-3	1317+15	LT	NO TURNS	BAND	36.00	36.00	9.00			9.00								MOUNTED ON MA-12
US-20	R4-7	1317+15	RT	KEEP RIGHT	BAND	36.00	48.00	12.00				12.00							FACE WEST
US-20	R3-3	1317+15	RT	NO TURNS	BAND	24.00	24.00	4.00			4.00								FACE EAST
US-20	W4-3R	1317+71	RT	ADDED LANE - FROM RIGHT	WOOD POST	36.00	36.00	9.00	16.00			9.00				16			
US-20	M1-1200	1322+10	LT	ROUTE/COUNTY/MILEAGE	BAND	18.00	18.00	2.30			2.30								20 / WINNEBAGO / 25
US-20	M1-1200	1322+10	RT	ROUTE/COUNTY/MILEAGE	BAND	18.00	18.00	2.30			2.30								21 / WINNEBAGO / 25
US-20	M3-2	1322+10	RT	EAST (WHITE)	BAND	24.00	12.00	2.00			2.00								
US-20	M1-4	1322+10	RT	U.S. ROUTE SIGN - US 20	BAND	24.00	24.00	4.00			4.00								
US-20	R2-1	1324+30	LT	SPEED LIMIT - 35 MPH	BAND	30.00	36.00	7.50			7.50								WITH FLAG
US-20	R2-1	1324+30	LT	SPEED LIMIT - 35 MPH	TELESCOPING STEEL	30.00	36.00	7.50	14.00		7.50				14				FACE WEST
US-20	R2-1	1324+30	LT	SPEED LIMIT - 45 MPH	TELESCOPING STEEL	30.00	36.00	7.50			7.50								FACE EAST

NOTES:
1. CONTRACTOR SHALL CONTACT TRAFFIC OPERATIONS AFTER FINAL GRADING AND LIGHTING IS COMPLETED TO DETERMINE THE FINAL LAYOUT OF THE SIGNS.
2. THE STEEL POSTS IN THE SCHEDULE ARE FOR BIDDING PURPOSES ONLY. EACH POST SIZE AND LENGTH SHALL BE PROVIDED AFTER FINAL GRADING IS COMPLETED.

PROPOSED GROUND MOUNTED SIGNS

LOCATION	SIGN CODE	STATION	LT/RT	DESCRIPTION	MOUNTING TYPE	SIGN PANEL WIDTH	SIGN PANEL HEIGHT	SIGN PANEL AREA	POST ONE LENGTH	POST TWO LENGTH	72000100 SIGN PANEL - TYPE 1	72000200 SIGN PANEL - TYPE 2	72000300 SIGN PANEL - TYPE 3	72700100 STRUCTURAL STEEL SIGN SUPPORT BREAKAWAY WIDE FLANGE	72800100 TELESCOPING STEEL SIGN SUPPORT	73000100 WOOD SIGN SUPPORT	73400100 CONCRETE FOUNDATION	X7210010 SIGN PANEL OVERLAY (SPECIAL)	REMARKS
(ROAD)	(MUTCD or IDOT)	(STA)				(INCH)	(INCH)	(SQ FT)	(FOOT)	(FOOT)	(SQFT)	(SQFT)	(SQFT)	(POUND)	(FOOT)	(FOOT)	(CU YD)	(SQFT)	
US-20	R2-1	1324+30	RT	SPEED LIMIT - 45 MPH	BAND	30.00	36.00	7.50			7.50								
US-20	M3-3	1326+39	LT	SOUTH (BLUE)	WOOD POST	24.00	12.00	2.00			2.00								
US-20	M3-3	1326+39	LT	SOUTH (WHITE)	WOOD POST	24.00	12.00	2.00			2.00								
US-20	M3-4	1326+39	LT	WEST (WHITE)	WOOD POST	24.00	12.00	2.00			2.00								
US-20	M1-1	1326+39	LT	INTERSTATE ROUTE SIGN - I-39	WOOD POST	24.00	24.00	4.00			4.00								
US-20	M1-4	1326+39	LT	U.S. ROUTE SIGN - US 20	WOOD POST	24.00	24.00	4.00			4.00								
US-20	M1-4	1326+39	LT	U.S. ROUTE SIGN - US 20	WOOD POST	24.00	24.00	4.00	17.00	18.00	4.00					35			
US-20	M5-4	1326+39	LT	LANE DESIGNATION - LEFT LANE (BLUE)	WOOD POST	24.00	18.00	3.00			3.00								
US-20	M5-4	1326+39	LT	LANE DESIGNATION - LEFT LANE (WHITE)	WOOD POST	24.00	18.00	3.00			3.00								
US-20	M5-4	1326+39	LT	LANE DESIGNATION - LEFT LANE (WHITE)	WOOD POST	24.00	18.00	3.00			3.00								
US-20	WSPC	1326+73	RT	RIGHT LANE MUST TURN RIGHT	WOOD POST	36.00	36.00	9.00	17.00		9.00					17			
US-20	W3-5	1328+54	LT	REDUCED SPEED LIMIT AHEAD - 35 MPH	WOOD POST	36.00	36.00	9.00	17.00		9.00					17			WITH FLAG
US-20	W3-3	1329+22	RT	SIGNAL AHEAD	WOOD POST	36.00	36.00	9.00	17.00		9.00					17			
US-20	D3-1	1329+22	RT	MILL RD	WOOD POST	30.00	9.00	1.90			1.90								
US-20	W3-3	1329+22	RT	SIGNAL AHEAD	WOOD POST	36.00	36.00	9.00	18.00		9.00					18			
US-20	D3-1	1329+22	RT	MILL RD	WOOD POST	30.00	9.00	1.90			1.90								
US-20	M4-15	1330+69	LT	TOLL	WOOD POST	24.00	12.00	2.00			2.00								
US-20	M4-15	1330+69	LT	TOLL	WOOD POST	24.00	12.00	2.00			2.00								
US-20	M4-5	1330+69	LT	TO (BLUE)	WOOD POST	24.00	12.00	2.00			2.00								
US-20	M3-1	1330+69	LT	NORTH (BLUE)	WOOD POST	24.00	12.00	2.00			2.00								
US-20	M3-1	1330+69	LT	NORTH (WHITE)	WOOD POST	24.00	12.00	2.00			2.00								
US-20	M4-15	1330+69	LT	TOLL	WOOD POST	24.00	12.00	2.00			2.00								
US-20	M1-1	1330+69	LT	INTERSTATE ROUTE SIGN - I-39	WOOD POST	24.00	24.00	4.00	18.00	19.00	4.00					37			
US-20	M1-4	1330+69	LT	U.S. ROUTE SIGN - US 51	WOOD POST	24.00	24.00	4.00			4.00								
US-20	M1-1	1330+69	LT	INTERSTATE ROUTE SIGN - I-90	WOOD POST	24.00	24.00	4.00			4.00								
US-20	M5-2R	1330+69	LT	DIRECTIONAL ARROW (BLUE)	WOOD POST	21.00	15.00	2.20			2.20								
US-20	M5-2R	1330+69	LT	DIRECTIONAL ARROW (WHITE)	WOOD POST	21.00	15.00	2.20			2.20								
US-20	M5-2R	1330+69	LT	DIRECTIONAL ARROW (BLUE)	WOOD POST	21.00	15.00	2.20			2.20								
US-20	D1-1a	1331+71	RT	DESTINATION	TELESCOPING STEEL	72.00	18.00	9.00			9.00								CHERRY VALLEY
US-20	CUSTOM	1331+71	RT	CUSTOM	TELESCOPING STEEL	24.00	18.00	3.00	17.00	18.00					35				SHELL LOGO SIGN
US-20	M6-1R	1331+71	RT	RIGHT ARROW - WHITE	TELESCOPING STEEL	21.00	15.00	2.20			2.20								
US-20	M2-1	1332+84	LT	JUNCTION (BLUE)	WOOD POST	21.00	15.00	2.20			2.20								
US-20	M2-1	1332+84	LT	JUNCTION (WHITE)	WOOD POST	21.00	15.00	2.20	16.00		2.20					16			
US-20	M1-1	1332+84	LT	INTERSTATE ROUTE SIGN - I-39	WOOD POST	24.00	24.00	4.00			4.00								
US-20	M1-4	1332+84	LT	U.S. ROUTE SIGN - US 51	WOOD POST	24.00	24.00	4.00			4.00								
US-20	R3-7R	1334+20	RT	RIGHT LANE MUST TURN RIGHT	WOOD POST	36.00	36.00	9.00	16.00		9.00					16			
US-20	R2-1	1335+00	LT	SPEED LIMIT - 45 MPH	WOOD POST	36.00	48.00	12.00	17.00			12.00				17			
US-20	I-8	1336+74	RT	LIBRARY	WOOD POST	24.00	24.00	4.00	16.00		4.00					16			
US-20	M6-1	1336+74	RT	DIRECTIONAL ARROW (GREEN)	WOOD POST	21.00	15.00	2.20			2.20								
MALL DR	R1-1	297+44	LT	STOP	TELESCOPING STEEL	30.00	30.00	6.30	16.00		6.30				16				
MALL DR	W4-4aLP	297+44	LT	TRAFFIC FROM LEFT DOES NOT STOP	TELESCOPING STEEL	24.00	12.00	2.00			2.00								
MALL DR	R1-1	297+91	RT	STOP	TELESCOPING STEEL	30.00	30.00	6.30	16.00		6.30				16				
MALL DR	W4-4aLP	297+91	RT	TRAFFIC FROM RIGHT DOES NOT STOP	TELESCOPING STEEL	24.00	12.00	2.00			2.00								
MALL DR	R4-7	300+84	CL	KEEP RIGHT	TELESCOPING STEEL	24.00	30.00	5.00	16.00		5.00								
MALL DR	R4-7	303+23	CL	KEEP RIGHT	TELESCOPING STEEL	24.00	30.00	5.00	16.00		5.00								
										COLUMN 10 SUBTOTALS	836	90	126	1,406	145	813	5	0	
										TOTALS	1,089	291	1,112	10,792	198	1,620	26	177	

NOTES:
1. CONTRACTOR SHALL CONTACT TRAFFIC OPERATIONS AFTER FINAL GRADING AND LIGHTING IS COMPLETED TO DETERMINE THE FINAL LAYOUT OF THE SIGNS.
2. THE STEEL POSTS IN THE SCHEDULE ARE FOR BIDDING PURPOSES ONLY. EACH POST SIZE AND LENGTH SHALL BE PROVIDED AFTER FINAL GRADING IS COMPLETED.

MODEL: Default
FILE NAME: pw://benesch-pw.bentley.com:benesch-pw-01/Documents/108000s10800.00/Eng Docs/CAD Sheets/General/M0264R71-2DH-int-SCH-28A.dgn

benesch
Allied Benesch & Company
35 W. Wacker Drive, Suite 3300
Chicago, Illinois 60601
312.565.4500 Job No. 10800.00

USER NAME = mtoney	DESIGNED - A.GIBSON	REVISED -	
	DRAWN - J.MAJCHER	REVISED -	
PLOT SCALE = 0.167 ' / in.	CHECKED - J.TARDY	REVISED -	
PLOT DATE = 10/13/2023	DATE - 10/13/2023	REVISED -	

STATE OF ILLINOIS
DEPARTMENT OF TRANSPORTATION

SCHEDULE OF QUANTITIES
PROPOSED GROUND SIGNING

SCALE: N/A | SHEET 46 OF 48 SHEETS | STA. $G8981 | TO STA. $H8981

F.A.* RTE.	SECTION	COUNTY	TOTAL SHEETS	SHEET NO.
*	(5)RS & (5&5HB)RC	WINNEBAGO	1279	94
		CONTRACT NO. 64R71		
	ILLINOIS FED. AID PROJECT			

* FAI ROUTE 39 (I-39) & FAP ROUTE 525 (US 20)

PROPOSED OVERHEAD SIGNS

LOCATION	SIGN CODE	STATION	DESCRIPTION	MOUNTING TYPE	SIGN PANEL WIDTH	SIGN PANEL HEIGHT	SIGN PANEL AREA	72000100 SIGN PANEL, TYPE 1	72000200 SIGN PANEL, TYPE 2	72000300 SIGN PANEL, TYPE 3	REMARKS
(ROAD)	(MUTCD or IDOT)	(STA)			(INCH)	(INCH)	(SQ FT)	(SQ FT)	(SQ FT)	(SQ FT)	
I-39/US-20	2E-23	2738+10	INTERCHANGE EXIT DIRECTION	SPAN	300.00	120.00	250.00			250.00	I-39 US 51 TOLL NORTH I-90 TOLL WEST
I-39/US-20	2E-23	2738+10	INTERCHANGE EXIT DIRECTION	SPAN	174.00	150.00	181.25			181.25	I-90 EAST TOLL
I-39/US-20	2E-23	2740+65	PULL THROUGH	SPAN	300.00	126.00	262.50			262.50	US 20 WEST I-39 US 51 SOUTH
I-39/US-20	2E-23	2740+65	INTERCHANGE EXIT DIRECTION	SPAN	228.00	174.00	275.50			275.50	US 20 EAST
PR RAMP B	2E-22	224+60	ARROW-PER-LANE GUIDE SIGN	SPAN	180.00	102.00	127.50			127.50	HARRISON AVE ROCKFORD
PR RAMP B	2E-22	224+60	ARROW-PER-LANE GUIDE SIGN	SPAN	114.00	102.00	80.75			80.75	US 20 EAST
PR RAMP B	R5-1a	224+60	WRONG WAY	SUPPORT	42.00	30.00	8.80	8.80			
PR RAMP B	R5-1a	224+60	WRONG WAY	SUPPORT	42.00	30.00	8.80	8.80			
PR RAMP C	2E-22	314+70	ARROW-PER-LANE GUIDE SIGN	SPAN	108.00	102.00	76.50			76.50	US 20 EAST
PR RAMP C	2E-22	314+70	ARROW-PER-LANE GUIDE SIGN	SPAN	150.00	102.00	106.25			106.25	HARRISON AVE ROCKFORD
PR RAMP C	R5-1a	314+70	WRONG WAY	SUPPORT	42.00	30.00	8.80	8.80			
PR RAMP C	R5-1a	314+70	WRONG WAY	SUPPORT	42.00	30.00	8.80	8.80			
							COLUMN 9 SUBTOTALS	36	0	1,361	
HARRISON AVE/US-20	2E-23	143+50	PULL THROUGH	SPAN	144.00	84.00	84.00			84.00	US 20 EAST
HARRISON AVE/US-20	2E-22	143+50	INTERCHANGE ADVANCE	SPAN	240.00	144.00	240.00			240.00	I-39 US 51 TOLL NORTH I-90 TOLL
HARRISON AVE/US-20	2E-23	143+50	INTERCHANGE EXIT DIRECTION	SPAN	240.00	144.00	240.00			240.00	I-39 US 51 SOUTH US 20 WEST
HARRISON AVE/US-20	E11-2	143+50	LEFT	SPAN	36.00	18.00	4.50	4.50			MOUNTED ON TOP OF INTERCHANGE ADVANCED SIGN
HARRISON AVE/US-20	2E-23	1312+25	INTERCHANGE EXIT DIRECTION	CANTILEVER	204.00	108.00	153.00			153.00	I-39 US 51 SOUTH US 20 WEST
HARRISON AVE/US-20	2E-23	1312+25	PULL THROUGH	CANTILEVER	144.00	54.00	54.00			54.00	HARRISON AVE ROCKFORD
HARRISON AVE/US-20	E11-2	1312+25	LEFT	SPAN	36.00	18.00	4.50	4.50			MOUNTED ON TOP OF INTERCHANGE EXIT DIRECTION SIGN
HARRISON AVE/US-20	2E-22	1322+00	INTERCHANGE ADVANCE	SPAN	204.00	132.00	187.00			187.00	I-39 US 51 SOUTH US 20 WEST
HARRISON AVE/US-20	2E-23	1322+00	PULL THROUGH	SPAN	144.00	54.00	54.00			54.00	HARRISON AVE ROCKFORD
HARRISON AVE/US-20	2E-23	1322+00	INTERCHANGE EXIT DIRECTION	SPAN	216.00	84.00	126.00			126.00	I-39 US 51 TOLL NORTH I-90 TOLL
HARRISON AVE/US-20	E11-2	1322+00	LEFT	SPAN	36.00	18.00	4.50	4.50			MOUNTED ON TOP OF INTERCHANGE ADVANCED SIGN
							COLUMN 10 SUBTOTALS	14	0	1,138	
							TOTALS	50	0	2,499	

MODEL: Default
FILE NAME: pw:\Benesch-pw.bentley.com:benesch-pw-01\Documents\108000s\108000.00\Eng Docs\CAD Sheets\General\D7264R71-2DI-int-SCH-29.dgn

benesch
Allied Benesch & Company
35 W. Wacker Drive, Suite 3300
Chicago, Illinois 60601
312.565.0450 Job No. 10800.00

USER NAME = mtoney	DESIGNED - A.GIBSON	REVISED -	
	DRAWN - J.MAJCHER	REVISED -	
PLOT SCALE = 0.167 '/ in.	CHECKED - J.TARDY	REVISED -	
PLOT DATE = 10/13/2023	DATE - 10/13/2023	REVISED -	

STATE OF ILLINOIS
DEPARTMENT OF TRANSPORTATION

SCHEDULE OF QUANTITIES
PROPOSED OVERHEAD SIGNING

SCALE: N/A | SHEET 47 OF 48 SHEETS | STA. | TO STA.

F.A.* RTE.	SECTION	COUNTY	TOTAL SHEETS	SHEET NO.
*	(5)RS & (5&5HB)RC	WINNEBAGO	1279	95
		CONTRACT NO. 64R71		
	ILLINOIS FED. AID PROJECT			

* FAI ROUTE 39 (I-39) & FAP ROUTE 525 (US 20)

PROPOSED PAVEMENT MARKINGS																									
LOCATION	STATION	STATION	78004600	78004620		78004630		78004640			78004645		78004655		78004660		78004720	78009000	78009004						
			PREFORMED PLASTIC PAVEMENT MARKING, TYPE D - LETTERS AND SYMBOLS	PREFORMED PLASTIC PAVEMENT MARKING, TYPE D - LINE 4"		PREFORMED PLASTIC PAVEMENT MARKING, TYPE D - LINE 6"		PREFORMED PLASTIC PAVEMENT MARKING, TYPE D - LINE 8"			PREFORMED PLASTIC PAVEMENT MARKING, TYPE D - LINE 9"		PREFORMED PLASTIC PAVEMENT MARKING, TYPE D - LINE 11"		PREFORMED PLASTIC PAVEMENT MARKING, TYPE D - LINE 12"		PREFORMED PLASTIC PAVEMENT MARKING, TYPE D - LINE 24"	MODIFIED URETHANE PAVEMENT MARKING - LETTERS AND SYMBOLS	MODIFIED URETHANE PAVEMENT MARKING - LINE 4"						
(ROAD)	(STA)	(STA)	(SQ FT)	(FOOT)		(FOOT)		(FOOT)			(FOOT)		(FOOT)		(FOOT)		(FOOT)	(SQFT)	(FOOT)						
			WHITE	SOLID WHITE	SOLID YELLOW	SOLID WHITE	SKIP-DASH WHITE	SOLID WHITE	DOTTED WHITE	SOLID YELLOW	SOLID WHITE	SKIP-DASH WHITE	SOLID WHITE	DOTTED WHITE	SOLID WHITE	SOLID YELLOW	SKIP-DASH WHITE	WHITE	SOLID WHITE	BROKEN WHITE	DOTTED WHITE	SOLID YELLOW	DOUBLE YELLOW	BROKEN YELLOW	DOTTED YELLOW
MAINLINE I-39/US 20	2685+00	2766+00																	6,019			8,710			
RAMP A	100+00	114+77		1,513	492	95		220		341		59			147	161	19								
RAMP B	200+00	227+92	84	968	843			142		138	225	94	440		41				974						
RAMP C	300+00	318+95	72	1,470	1,164	86		184		147			281		196		40								
RAMP D	400+00	421+13		1,088	980			259		115		73			101	67			1,337			383			
MAINLINE I-39 & RAMP C (TOLLWAY SECTION)	2737+19	2766+00		406															1,415			1,823			
HARRISON AVE (WEST OF MALL DR)	113+00	126+25	120	2,305	2,223	454	472	754	190			165	218		206		124								
HARRISON AVE (EAST OF MALL DR)	126+25	153+09	174	670	4,117	246		670		210	664	1,483	1,151	326	548		81	135	888			704			
US 20 (EAST OF I-39)	1311+13	1344+85	159	940	4,046			798		369	1,458	1,213	357		59		38	200	2,808			768	2,312		
MALL DR																		287		452	90	105	1,682		137
FRONTAGE RD																								40	
SUBTOTALS			609	9,360	13,865	881	472	3,027	190	1,320	2,347	3,087	2,447	326	1,298	228	302	622	13,441	452	90	12,493	3,994	40	137
TOTALS			609	9,360	13,865	881	472	3,027	190	1,320	2,347	3,087	2,447	326	1,298	228	302	622	13,441	452	90	12,493	3,994	40	137

PROPOSED PAVEMENT MARKINGS																				
LOCATION	STATION	STATION	78009006	78009008				78009012		78009024	78011000	78011025	78011035	78011045	78011050	78011060	78011065	78011125	78100100	
			MODIFIED URETHANE PAVEMENT MARKING - LINE 6"	MODIFIED URETHANE PAVEMENT MARKING - LINE 8"				MODIFIED URETHANE PAVEMENT MARKING - LINE 12"		MODIFIED URETHANE PAVEMENT MARKING - LINE 24"	GROOVING FOR RECESSED PAVEMENT MARKING, LETTERS AND SYMBOLS	GROOVING FOR RECESSED PAVMENT MARKING 5"	GROOVING FOR RECESSED PAVMENT MARKING 7"	GROOVING FOR RECESSED PAVMENT MARKING 9"	GROOVING FOR RECESSED PAVMENT MARKING 10"	GROOVING FOR RECESSED PAVMENT MARKING 12"	GROOVING FOR RECESSED PAVMENT MARKING 13"	GROOVING FOR RECESSED PAVMENT MARKING 25"	RAISED REFLECTIVE PAVEMENT MARKER	
(ROAD)	(STA)	(STA)	(FOOT)	(FOOT)				(FOOT)		(FOOT)	(SQFT)	(FOOT)	(FOOT)	(FOOT)	(FOOT)	(FOOT)	(FOOT)	(FOOT)	(EACH)	
			SOLID WHITE	SKIP-DASH WHITE	SOLID WHITE	SOLID YELLOW	LANE DIV	DOTTED WHITE	SOLID WHITE	SOLID YELLOW	SOLID WHITE									
MAINLINE I-39/US 20	2685+00	2766+00		2,959	2,505			237	1,430	96										
RAMP A	100+00	114+77			497	86			18	14	20		2,005	95	561	59		308	19	3
RAMP B	200+00	227+92			185						54	91	1,811		280	319	440	41		22
RAMP C	300+00	318+95			298				24			78	2,634	86	331		281	196	40	7
RAMP D	400+00	421+13			671								2,068		374	73		168		4
MAINLINE I-39 & RAMP C (TOLLWAY SECTION)	2737+19	2766+00		1124	1,557			261		221			406							
HARRISON AVE (WEST OF MALL DR)	113+00	126+25										117	4,528	926	944	165	218	206	124	57
HARRISON AVE (EAST OF MALL DR)	126+25	153+09	630	165	181						38	189	4,787	246	880	2,147	1,477	548	81	123
US 20 (EAST OF I-39)	1311+13	1344+85	1,243	569	393			527	710	184	163	173	4,986		1,167	2,671	357	59	38	109
MALL DR							671			50	150									
FRONTAGE RD											33									
SUBTOTALS			1,873	4,817	6,287	86	671	1,025	2,182	565	458	648	23,225	1,353	4,537	5,434	2,773	1,526	302	325
TOTALS			1,873	4,817	6,287	86	671	1,025	2,182	565	458	648	23,225	1,353	4,537	5,434	2,773	1,526	302	325

MODEL: Default
FILE NAME: pw:\benesch-pw.bentley.com:benesch-pw-01\Documents\10800s\10800.00\Eng. Docs\CAD Sheets\General\D264R71-2D\Plt-sht-SCH-30.dgn

benesch
Alfred Benesch & Company
35 W. Wacker Drive, Suite 3300
Chicago, Illinois 60601
312-565-0150 Job No. 10800.00

USER NAME = mtoney	DESIGNED - A.GIBSON	REVISED -	
	DRAWN - J.MAJCHER	REVISED -	
PLOT SCALE = 0.167 ' / in.	CHECKED - J.TARDY	REVISED -	
PLOT DATE = 10/13/2023	DATE - 10/13/2023	REVISED -	

STATE OF ILLINOIS
DEPARTMENT OF TRANSPORTATION

SCHEDULE OF QUANTITIES
PAVEMENT MARKING

SCALE: N/A | SHEET 48 OF 48 SHEETS | STA. | TO STA.

F.A.* RTE.	SECTION	COUNTY	TOTAL SHEETS	SHEET NO.
*	(5)RS & (5&5HB)RC	WINNEBAGO	1279	96
		CONTRACT NO. 64R71		
	ILLINOIS FED. AID PROJECT			

* FAI ROUTE 39 (I-39) & FAP ROUTE 525 (US 20)

CONTROL POINTS				
POINT	NORTHING	EASTING	ELEVATION	DESCRIPTION
182	2033071.5682	2619173.5013	775.845	PIN W/CAP
183	2032893.9170	2619064.0427	771.655	PIN W/CAP
90163	2031427.9273	2624505.1792	737.451	⅜ REBAR
ASE1	2032186.4903	2620787.5656	773.007	PIN W/RED CAP
ASE2	2031985.3641	2624918.3061	739.408	PIN W/RED CAP
ASE3	2031983.2521	2623874.7626	757.419	PIN W/RED CAP
DE7373	2032720.7438	2619635.1489	773.326	NGS

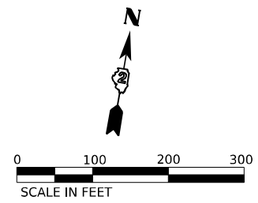

EX CURVE HARRISON 1
PI STA = 104+93.42
Δ = 29°00'00" (LT)
D = 02°59'57"
R = 1,910.40'
T = 494.06'
E = 62.85'
PC STA = 99+99.36
PT STA = 109+66.30

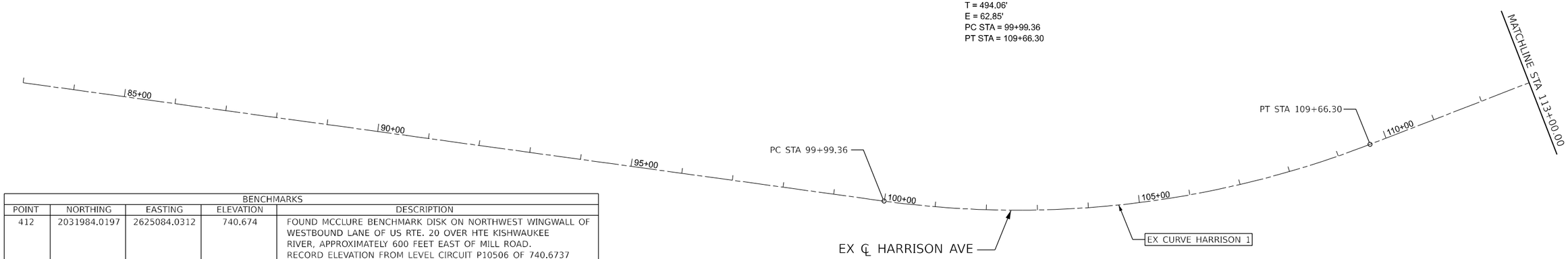

BENCHMARKS				
POINT	NORTHING	EASTING	ELEVATION	DESCRIPTION
412	2031984.0197	2625084.0312	740.674	FOUND MCCLURE BENCHMARK DISK ON NORTHWEST WINGWALL OF WESTBOUND LANE OF US RTE. 20 OVER HTE KISHWAUKEE RIVER, APPROXIMATELY 600 FEET EAST OF MILL ROAD. RECORD ELEVATION FROM LEVEL CIRCUIT P10506 OF 740.6737 WAS HELD.
UP402	2028753.8478	2619313.5946	796.686	FOUND CUT SQUARE ON SOUTHEAST CORNER OF THE I39 NORTHBOUND BRIDGE OVER THE UP RAILROAD.
404	2030157.1892	2620475.2384	758.552	FOUND CUT SQUARE ON FOUNDATION OF WESTERLY LEG OF BELVIDERE ½ MILE, "EXIT SIGN 122A" ON I39 NORTH.
405	2030863.6799	2621037.1297	770.671	FOUND CUT "X" ON NORTHWEST BOLT OF EAST END OF THE OVERHEAD SIGN FOR "BELVIDERE EXIT 122A "ON EXIT RAMP ON I39 NORTH.
ASE405	2028936.8962	2619371.2303	795.369	SET CUT "X" ON THE NORTHEAST CORNER OF I39 SOUTHBOUND BRIDGE OVER THE UP RAILROAD.
ASE406	2031273.6099	2622107.2471	799.558	SET CUT "X" ON THE 2ND LIGHT POLE BASE ON US RTE. 20 EASTBOUND OFF RAMP FROM I39 NORTH.
ASE407	2032030.6347	2623375.5485	771.568	SET CUT "X" ON NORTH END OF AN OVERHEAD SIGN FOUNDATION AT THE BEGINNING OF THE RAMP FROM US RTE. 20 EASTBOUND TO I39 NORTH.
ASE408	2032050.8245	2621938.2927	781.368	CUT "X" ON BOLT OF LARGE SIGN FOR I90/I39 SOUTH TO FREEPORT/BLOOMINGTON.
ASE409	2031974.3488	2621540.6300	781.189	CUT "X" ON LARGE SIGN FOUNDATION FOR I90/I39 NORTH TO CHICAGO/WISCONSIN.
ASE410	2032233.3825	2620521.3342	769.513	CUT "X" ON THE SOUTH END OF AN OVERHEAD SIGN FOUNDATION AT THE BEGINNING OF THE RAMP FROM HARRISON AVENUE TO I39 SOUTH.
ASE411	2032588.9530	2619162.1693	767.554	CUT "X" ON MAST ARM IN THE SOUTHEAST QUADRANT OF THE HARRISON AVENUE AND SOUTH MALL DRIVE.
ASE412	2031905.0795	2621654.4569	801.344	CUT "X" ON SOUTHEAST CORNER OF THE BRIDGE WALL FOR I39 SOUTHBOUND LANE OVER HARRISON AVENUE.
ASE413	2032212.5744	2621920.9655	800.451	SET CUT "X" ON THE SIGN FOUNDATION EXIT 122B FROM I39 NORTHBOUND TO HARRISON AVENUE.
ASE416	2033383.0444	2622355.8406	801.254	FOUND CUT SQUARE ON OVERHEAD SIGN FOUNDATION, MEDIAN SIDE OF EXIT 122A TO HARRISON AVENUE ON I39 SOUTH.

NOTE: NORTHINGS AND EASTINGS ARE IN NAD 1983 SPCS ILLINOIS WEST

benesch
Alfred Benesch & Company
35 W. Wacker Drive, Suite 3300
Chicago, Illinois 60601
312-565-0450 Job No. 10800.00

USER NAME = jworthington	DESIGNED - A.GIBSON	REVISED -	
	DRAWN - N.REYNOLDS	REVISED -	
PLOT SCALE = 0.16666633 ' / in.	CHECKED - J.TARDY	REVISED -	
PLOT DATE = 10/11/2023	DATE - 10/13/2023	REVISED -	

STATE OF ILLINOIS
DEPARTMENT OF TRANSPORTATION

EXISTING ALIGNMENTS
HARRISON AVE AND I-39

SCALE: 1"=100' | SHEET 1 OF 21 SHEETS | STA. | TO STA.

F.A.* RTE.	SECTION	COUNTY	TOTAL SHEETS	SHEET NO.
*	(5)RS & (5&5HB)RC	WINNEBAGO	1279	97
		CONTRACT NO. 64R71		
	ILLINOIS	FED. AID PROJECT		

* FAI ROUTE 39 (I-39) & FAP ROUTE 525 (US 20)

MODEL: 01 - Ex Har I39 - Plan 1 [Sheet]
FILE NAME: pw://benesch-pw.bentley.com:benesch-pw-01\Documents\10800s\10800.00\Eng Docs\CAD Sheets\Roadway\Alignments\D264R71-DDI-Alignment Sheet Base.dgn

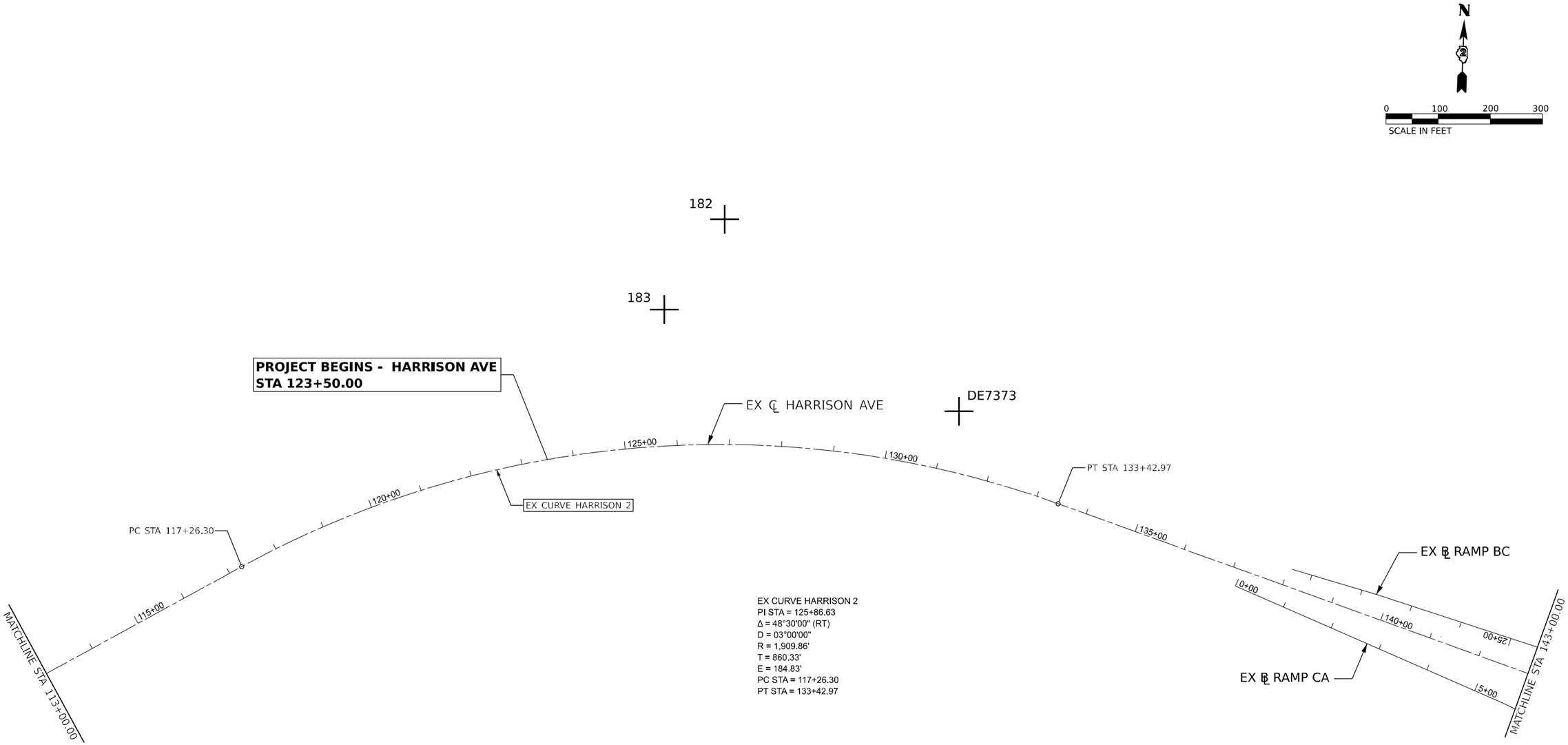

EX CURVE HARRISON 2
PI STA = 125+86.63
Δ = 48°30'00" (RT)
D = 03°00'00"
R = 1,909.86'
T = 860.33'
E = 184.83'
PC STA = 117+26.30
PT STA = 133+42.97

NOTE:
SEE OTHER EXISTING ALIGNMENT SHEETS FOR INFORMATION ON RAMP BC AND RAMP CA ALIGNMENTS.

MODEL: 02 - Ex Har 139 - Plan 2 [Sheet]
FILE NAME: pw://benesch-pw.bentley.com:benesch-pw-01\Documents\10800s\10800\00\Eng_Docs\CAD_Sheets\Roadway\Alignments\D264R71-001-Alignment Sheet Base.dgn

benesch
Allfred Benesch & Company
35 W. Wacker Drive, Suite 3300
Chicago, Illinois 60601
312.565.0450 Job No. 10800.00

USER NAME = jworthington	DESIGNED - A.GIBSON	REVISED -	
	DRAWN - N.REYNOLDS	REVISED -	
PLOT SCALE = 0.16666633 ' / in.	CHECKED - J.TARDY	REVISED -	
PLOT DATE = 10/11/2023	DATE - 10/13/2023	REVISED -	

STATE OF ILLINOIS
DEPARTMENT OF TRANSPORTATION

EXISTING ALIGNMENTS
HARRISON AVE AND I-39

SCALE: 1"=100' | SHEET 2 OF 21 SHEETS | STA. | TO STA.

F.A.* RTE.	SECTION	COUNTY	TOTAL SHEETS	SHEET NO.
*	(5)RS & (5&5HB)RC	WINNEBAGO	1279	98
		CONTRACT NO. 64R71		
	ILLINOIS	FED. AID PROJECT		

* FAI ROUTE 39 (I-39) & FAP ROUTE 525 (US 20)

EX CURVE HARRISON 3
PI STA = 149+02.51
Δ = 08°20'45" (LT)
D = 01°00'00"
R = 5,729.71'
T = 418.03'
E = 15.23'
PC STA = 144+84.47
PT STA = 153+19.06

EX CURVE I39 2
PI STA = 1305+71.86
Δ = 09°12'56" (LT)
D = 00°50'00"
R = 6,875.65'
T = 554.14'
E = 22.29'
PC STA = 1300+17.72
PT STA = 1311+23.61

EX CURVE US 20-3
PI STA = 1316+03.34
Δ = 09°34'19" (LT)
D = 01°00'00"
R = 5,729.71'
T = 479.72'
E = 20.05'
PC STA = 1311+23.61
PT STA = 1320+80.83

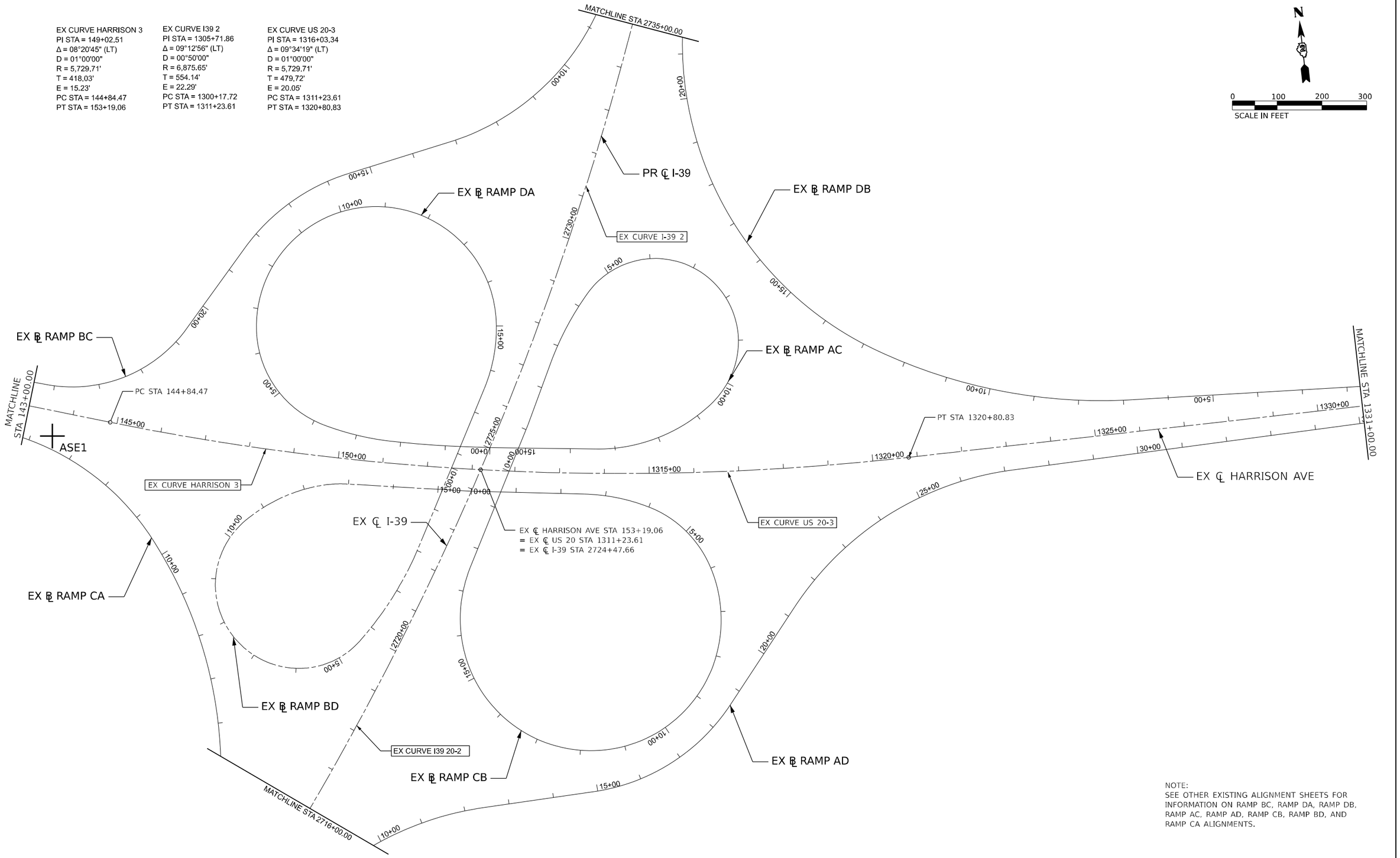

NOTE:
SEE OTHER EXISTING ALIGNMENT SHEETS FOR INFORMATION ON RAMP BC, RAMP DA, RAMP DB, RAMP AC, RAMP AD, RAMP CB, RAMP BD, AND RAMP CA ALIGNMENTS.

MODEL: 03 - Ex Har I39 - Plan 3 [Sheet]
FILE NAME: pw://benesch-pw.bentley.com:benesch-pw-01/Documents/10800s/10800.00/Eng_Docs/CAD_Sheets/Roadway/Alignments/D264R71-ODI-Alignment Sheet Base.dgn

benesch
Alfred Benesch & Company
35 W. Wacker Drive, Suite 3300
Chicago, Illinois 60601
312-565-0450 Job No. 10800.00

USER NAME = jworthington	DESIGNED - A.GIBSON	REVISED -	
	DRAWN - N.REYNOLDS	REVISED -	
PLOT SCALE = 0.16666633 ' / in.	CHECKED - J.TARDY	REVISED -	
PLOT DATE = 10/11/2023	DATE - 10/13/2023	REVISED -	

STATE OF ILLINOIS
DEPARTMENT OF TRANSPORTATION

EXISTING ALIGNMENTS
HARRISON AVE AND I-39

SCALE: 1"=100' | SHEET 3 OF 21 SHEETS | STA. | TO STA.

F.A.* RTE.	SECTION	COUNTY	TOTAL SHEETS	SHEET NO.
*	(5)RS & (5&5HB)RC	WINNEBAGO	1279	99
		CONTRACT NO. 64R71		
	ILLINOIS	FED. AID PROJECT		

* FAI ROUTE 39 (I-39) & FAP ROUTE 525 (US 20)

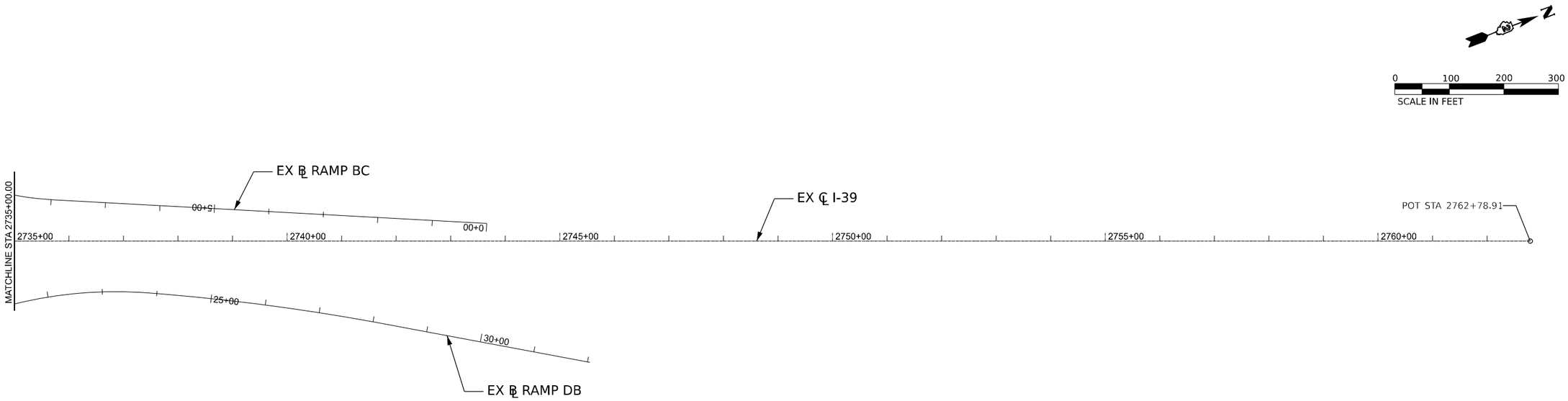

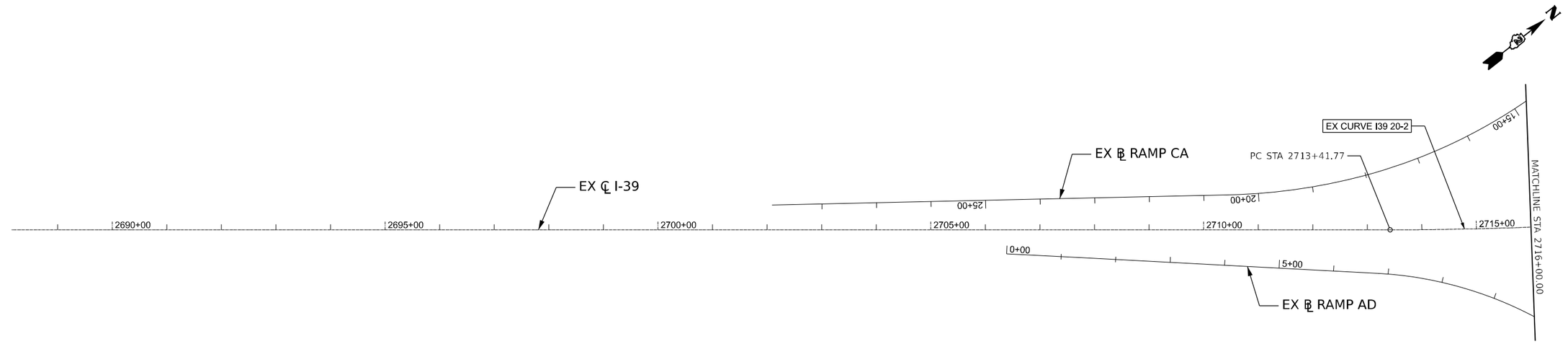

NOTE:
SEE OTHER EXISTING ALIGNMENT SHEETS FOR INFORMATION ON RAMP BC, RAMP DB, RAMP CA, AND RAMP AD ALIGNMENTS.

MODEL: 04 - Ex Har I39 - Plan 3A [Sheet]
FILE NAME: pw://benesch-pw.bentley.com:benesch-pw-01/Documents/10809z10800.00/Eng_Docs/CAD_Sheets/Roadway/Alignments/D264R71-00EAlignment Sheet Basis.dgn

benesch
Allfred Benesch & Company
35 W. Wacker Drive, Suite 3300
Chicago, Illinois 60601
312-565-0450 Job No. 10800.00

USER NAME = jworthington	DESIGNED - A.GIBSON	REVISED -	
	DRAWN - N.REYNOLDS	REVISED -	
PLOT SCALE = 0.16666633 ' / in.	CHECKED - J.TARDY	REVISED -	
PLOT DATE = 10/11/2023	DATE - 10/13/2023	REVISED -	

STATE OF ILLINOIS
DEPARTMENT OF TRANSPORTATION

EXISTING ALIGNMENTS HARRISON AVE AND I-39

SCALE: 1"=100' | SHEET 4 OF 21 SHEETS | STA. | TO STA.

F.A.* RTE.	SECTION	COUNTY	TOTAL SHEETS	SHEET NO.
*	(5)RS & (5&5HB)RC	WINNEBAGO	1279	100
		CONTRACT NO. 64R71		
	ILLINOIS	FED. AID PROJECT		

* FAI ROUTE 39 (I-39) & FAP ROUTE 525 (US 20)