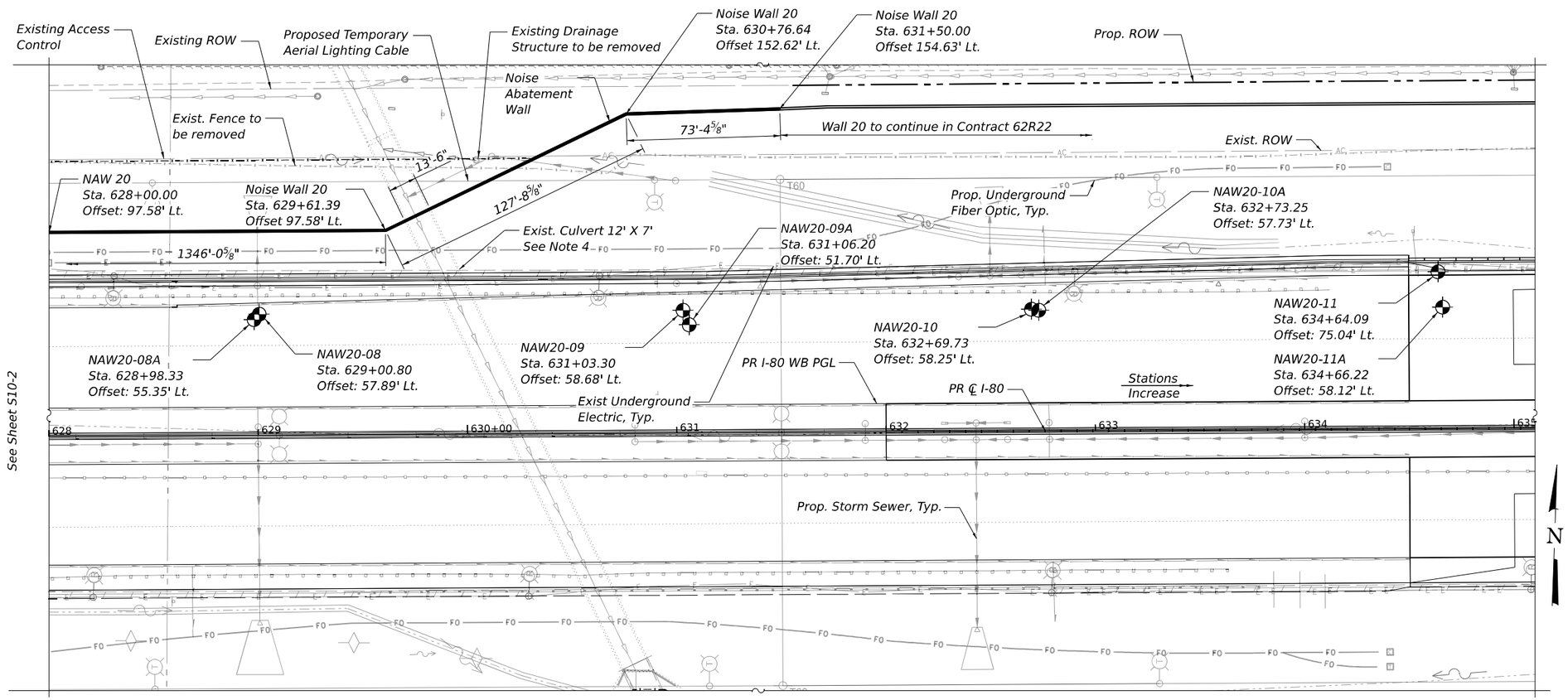

PLAN

(S.N. 099-N1022)

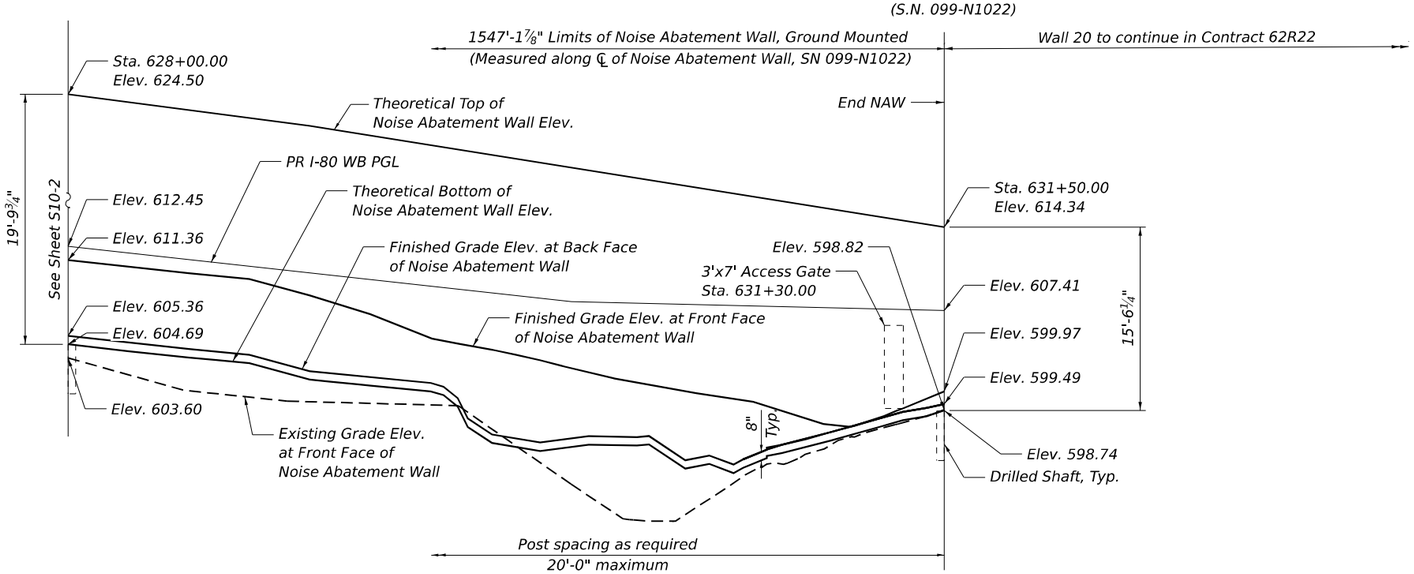

ELEVATION

(S.N. 099-N1022)

LEGEND:

- Exist. Underground Telephone
- Exist. Underground Electric
- Prop. Underground Electric
- Prop. Lighting Cable
- Exist. Underground Gas
- Exist. Aerial Line
- Exist. Underground Fiber Optic
- Prop. Underground Fiber Optic
- Exist. Underground Cable
- Exist. Pipe Underdrain
- Prop. Pipe Underdrain
- Exist. Storm Sewer
- Prop. Storm Sewer
- Prop. Guardrail
- Exist. Guardrail
- Exist. Fence
- Exist. Access Control & ROW
- Exist. Cable Barrier
- Exist. Lighting.
- Prop. Lighting
- Prop. Drainage Structure
- Prop. Concrete Headwall
- Soil Boring

NOTES:

1. For General Notes, Index of Sheets, General Details and Total Bill of Material, see Sheet S10-4
2. Stations are measured along and offsets are measured to PR ℄ I-80.
3. Wall 20 shall continue in Contract 62R22. Contractor shall Coordinate noise wall with adjacent contract.
4. The Contractor shall verify the location of the existing 12'x7' culvert to remain near Sta. 629+76.23. The Contractor shall exercise extreme caution during construction to make certain that construction activities will not have detrimental effect on the existing culvert. Any damage to the existing elements during construction shall be repaired by the Contractor, at his/her expense, and at no charge to the Department.

MODEL: BL_PR_I80 - Plan 3 [Sheet]
FILE NAME: pw://transystems-pw.bentley.com:TRANSYSCORP-PW1-HOSTED/Documents/Projects_2018/CH401/401180022/02-TranSystems/CAD/62R89/Sheets/23-Structural/Noise Walls/D162R89-SHT-NAW20-STRUCT-3.dgn

HBM ENGINEERING GROUP, LLC

USER NAME = Jana.Issa	DESIGNED - AGJ	REVISED -	
	DRAWN - AGJ	REVISED -	
PLOT SCALE =	CHECKED - LAB, MAI	REVISED -	
PLOT DATE = 12/1/2023	DATE - 10/6/23	REVISED -	

STATE OF ILLINOIS
DEPARTMENT OF TRANSPORTATION

GENERAL PLAN AND ELEVATION 3
NOISE ABATEMENT WALL 20 – SN 099–N1022

SCALE: | SHEET S10-3 OF S10-13 SHEETS | STA. TO STA.

F.A.I. RTE.	SECTION	COUNTY	TOTAL SHEETS	SHEET NO.
I-80	FAI 80 22 BR	WILL	1201	801

CONTRACT NO. 62R89

ILLINOIS | FED. AID PROJECT

GENERAL NOTES:

1. Noise Abatement Wall drilled shaft foundation diameter, depth and spacing to be determined by the Contractor.
2. Contractor shall provide Ashlar Stone Finish on both faces of Noise Abatement Wall. For details, see Sheet S10-13.
3. All underground utilities or drainage structure removal or installation shall be completed prior to foundation installation.
4. Hard drilling is anticipated down to elevation 592.0 based on Borings NAW20-10 and 20-11; however, bedrock was not observed in these borings. The contractor shall provide a method to ensure the NAW drilled shafts achieve at least the tip elevation required by the design. No additional compensation will be provided for drilling methods required through these soils.
5. Under no circumstances should truck beds be raised underneath ComEd transmission lines.
6. For Boring logs, see sheets S10-6 thru S10-12.
7. Any rock excavation required for noise wall construction will not be paid for separately and will be included with Noise Abatement Wall, Ground Mounted.
8. Theoretical Top of NAW Elev., Theoretical Bottom of NAW Elev., Finished Grade Elev. at Front Face of NAW, and Finished Grade Elev. at Back Face of NAW shall be taken as straight lines in the segments between each pair of stations shown in the NAW Data Table.
9. Access Gate station is approximate and can be constructed at a suitable location within 25 feet of the mentioned station, subject to approval of the Engineer. Access Gates shall have Exterior Grade Locks located at the back face of the wall with same keys for all gates for all walls.
10. The contractor shall field verify the location of the existing utilities prior to construction. The contractor shall take precautions not to damage existing utilities. Any damage shall be repaired by the Contractor at no additional cost.

DESIGN SPECIFICATIONS

AASHTO LRFD Bridge Design Specifications, 9th Edition

DESIGN STRESSES

FIELD UNITS
f'c = 4,000 psi
fy = 60,000 psi (Reinforcement)
fy = 50,000 psi (Struct. Steel, M270 Grade 50, posts)
fy = 36,000 psi (Struct. Steel, M270 Grade 36, all other structural steel)

PRECAST UNITS
f'c = 4,500 psi
fy = 60,000 psi (Reinforcement)
fy = 65,000 psi (Welded Wire Reinforcement)

DESIGN LOADS

Strength III or V Wind: 35 psf
Service I Wind: 15 psf
Unfactored Max. Active Earth Pressure: 260 psf
Unfactored Live Load Surcharge: 87 psf

INDEX OF SHEETS

TOTAL BILL OF MATERIAL

ITEM	UNIT	TOTAL (SN 099-N1022)
Name Plates	Each	1
Geocomposite Wall Drain	Sq Yd	887
Pipe Underdrains For Structures 4"	Foot	1,548
Noise Abatement Wall, Ground Mounted	Sq Ft	27,267

NOISE REDUCTION DATA

Noise Wall Structure Number	Face	From Sta.	To Sta.	Noise Reduction Coefficient	Comments
SN 016-N1022	I-80 Face	616+15.34	631+50.00	Reflective	-
	Residential Face	616+15.34	631+50.00	Reflective	-

UTILITY CROSSING (SN 099-N1022)

UTILITY	STATION**	OFFSET (LT)**	INV. ELEV.	COMMENTS
Exist. Underground Cable	616+43.35	97.58'	-	-
Exist. Underground Electric	618+55.50	97.58'	-	-
Prop. Pipe Underdrain	618+99.90	97.58'	-	-
Prop. Underground Electric	623+64.51	97.58'	-	-
Prop. Pipe Underdrain	623+99.87	97.58'	-	-
Exist. 10" Underground Sanitary Sewer	626+86.90	97.58'	-	-
Prop. 24" Storm Sewer	629+00.03	97.58'	±600.05	-
Exist. 7' x 12' Culvert	629+75.59	104.36'	-	-
Temp. Aerial Cable for Lighting	630+10.43	121.00'	-	-
Prop. 18" Storm Sewer	630+31.33	130.99'	±687.46	-

** Offset Measured To Centerline Of Wall

NOISE ABATEMENT WALL DATA TABLE

Station	Offset to Centerline Wall (ft)	Theoretical Top of NAW Elev.	I-80 WB PGL Elev.	Finished Grade Elev. At Front Face of NAW	Finished Grade Elev. At Back Face of NAW	Existing Grade Elev. At Front Face of NAW	Theoretical Bottom of NAW Elev.	Theoretical Wall Height (ft)	Height Retained (ft)
616+15.34	97.58	648.99	643.64	639.75	633.75	629.38	633.08	15.91	6.00
616+50.00	97.58	648.18	643.16	639.12	633.12	629.46	632.45	15.72	6.00
616+87.00	97.58	647.31	642.49	638.36	632.36	628.94	631.69	15.61	6.00
617+00.00	97.58	647.00	642.26	638.12	632.12	628.91	631.46	15.54	6.00
617+50.00	97.58	646.13	641.36	637.16	631.16	628.81	630.49	15.64	6.00
618+00.00	97.58	645.27	640.27	636.11	630.11	628.18	629.44	15.83	6.00
618+50.00	97.58	644.40	639.16	634.97	630.47	627.79	629.80	14.60	4.50
619+00.00	97.58	643.53	637.88	633.74	629.24	627.54	628.57	14.96	4.50
619+50.00	97.58	642.67	636.55	632.44	627.94	627.02	627.27	15.39	4.50
620+00.00	97.58	641.80	635.16	631.14	626.64	626.98	625.97	15.83	4.50
620+50.00	97.58	641.90	633.72	630.27	625.59	628.71	624.92	16.98	4.69
621+00.00	97.58	642.00	632.29	629.41	624.53	628.34	623.87	18.13	4.87
621+50.00	97.58	640.75	630.85	628.11	623.48	627.02	622.81	17.94	4.62
622+00.00	97.58	639.50	629.41	626.79	622.29	622.88	621.62	17.88	4.50
622+50.00	97.58	638.25	627.97	625.49	620.99	621.57	620.32	17.93	4.50
623+00.00	97.58	637.00	626.54	624.20	619.70	622.38	619.03	17.97	4.50
623+50.00	97.58	635.75	625.10	622.90	618.78	623.58	618.11	17.64	4.12
624+00.00	97.58	634.50	623.66	621.60	617.85	621.97	617.19	17.31	3.75
624+30.00	97.58	633.75	622.80	620.83	617.30	621.00	616.64	17.11	3.53
624+50.00	97.58	633.25	622.23	620.31	616.65	620.32	615.99	17.26	3.65
624+80.05	97.58	632.50	621.36	618.83	615.68	619.02	615.02	17.48	3.15
625+00.00	97.58	632.00	620.79	618.51	615.51	618.18	614.84	17.16	3.00
625+50.00	97.58	630.75	619.35	617.70	614.70	616.55	614.03	16.72	3.00
626+00.00	97.58	629.50	617.92	616.40	613.40	613.93	612.73	16.77	3.00
626+50.00	97.58	628.25	616.48	615.10	612.10	611.25	611.43	16.82	3.00
627+00.00	97.58	627.00	615.04	613.80	610.80	609.42	610.13	16.87	3.00
627+50.00	97.58	625.75	613.72	612.52	608.02	607.33	607.35	18.40	4.50
628+00.00	97.58	624.50	612.45	611.36	605.36	603.60	604.69	19.81	6.00
628+50.00	97.58	623.25	611.36	610.32	604.32	601.00	603.65	19.60	6.00
628+75.00	97.58	622.62	610.82	609.87	603.87	600.51	603.20	19.42	6.00
629+00.00	97.58	622.00	610.30	608.57	602.57	600.15	601.90	20.10	6.00
629+50.00	97.58	620.47	609.27	605.20	601.63	599.88	600.96	19.51	3.57
629+55.34	97.58	620.30	609.16	604.98	601.32	599.85	600.66	19.65	3.65
629+61.18	97.58	620.13	609.04	604.76	600.42	599.82	599.76	20.37	4.33
629+65.34	99.47	620.00	608.95	604.61	598.82	599.30	598.15	21.85	5.79
629+75.34	104.24	619.69	608.75	604.26	597.54	597.99	596.88	22.81	6.71
629+95.34	113.80	619.08	608.33	603.42	596.91	595.31	596.24	22.84	6.51
630+00.00	116.02	618.94	608.24	603.19	597.02	594.69	596.36	22.58	6.16
630+15.34	123.35	618.47	608.03	602.47	597.41	592.68	596.74	21.73	5.07
630+35.34	132.90	617.85	607.94	601.66	597.34	590.77	596.67	21.18	4.32
630+40.34	135.29	617.70	607.92	601.49	597.42	590.69	596.76	20.94	4.06
630+50.00	139.90	617.41	607.87	601.16	596.19	590.68	595.52	21.88	4.96
630+55.34	142.45	617.24	607.85	600.97	595.51	591.21	594.84	22.40	5.46
630+65.34	147.23	616.94	607.80	600.66	595.87	592.44	595.21	21.73	4.79
630+75.34	152.00	616.63	607.76	600.37	595.16	593.71	594.50	22.13	5.21
630+89.11	152.96	616.21	607.69	599.80	596.52	595.20	595.85	20.36	3.28
630+95.34	153.13	616.02	607.67	599.42	596.74	595.21	596.07	19.94	2.68
631+00.00	153.26	615.87	607.64	599.14	596.97	595.48	596.30	19.57	2.17
631+45.34	154.50	614.48	607.43	599.60	599.34	598.49	598.67	15.81	0.27
631+50.00	154.63	614.34	607.41	599.97	599.49	598.74	598.82	15.52	0.48

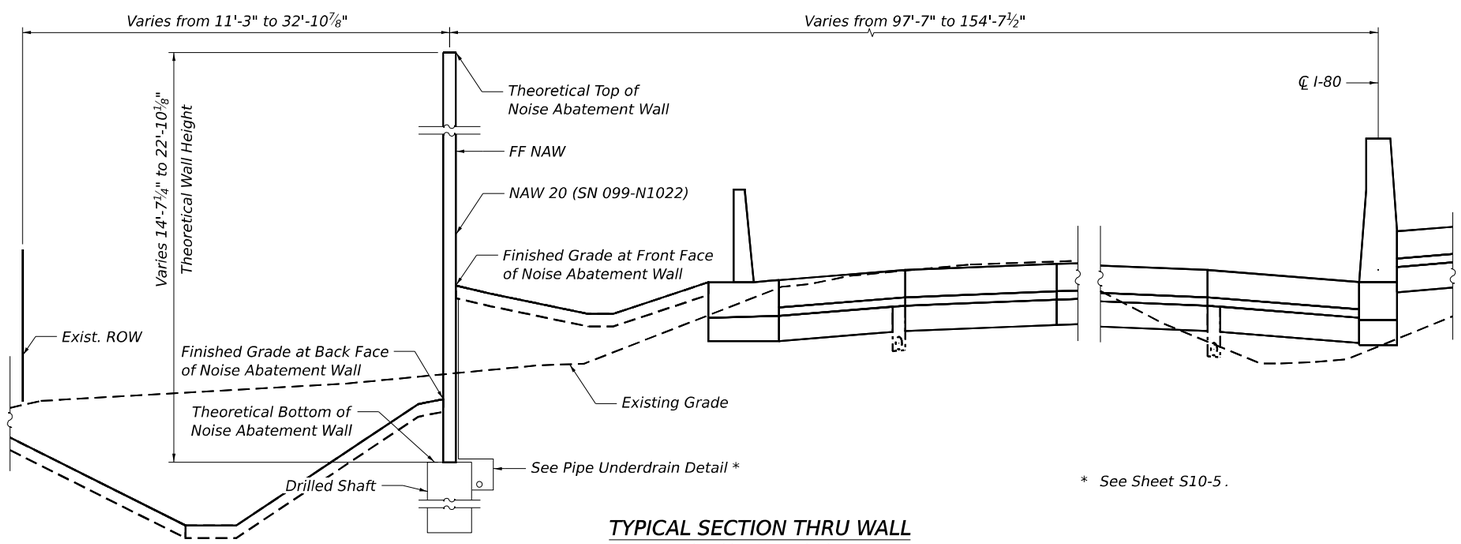

* See Sheet S10-5.

TYPICAL SECTION THRU WALL

(Looking Upstation)
6'-8½" Maximum Retained Fill Height

MODEL: BL_PR_I80 - Plan 3 [Sheet]
FILE NAME: pw://transystems-pw.bentley.com:TRANSYSCORP-PW1-HOSTED/Documents/Projects_2018/CH401/401180022/02-TranSystems/CAD/62R89/Sheets/23-Structural/Noise Walls/D162R89-SHT-NAW20-STRUCT-4.dgn

HBM ENGINEERING GROUP, LLC

USER NAME = Jana.Issa	DESIGNED - AGJ	REVISED -	
	DRAWN - AGJ	REVISED -	
PLOT SCALE =	CHECKED - LAB, MAI	REVISED -	
PLOT DATE = 12/1/2023	DATE - 10/6/23	REVISED -	

STATE OF ILLINOIS
DEPARTMENT OF TRANSPORTATION

GENERAL NOTES, TYPICAL SECTION AND DATA TABLES
NOISE ABATEMENT WALL 20

SCALE: | SHEET S10-4 OF S10-13 SHEETS | STA. | TO STA.

F.A.I. RTE.	SECTION	COUNTY	TOTAL SHEETS	SHEET NO.
I-80	FAI 80 22 BR	WILL	1201	802

CONTRACT NO. 62R89
ILLINOIS | FED. AID PROJECT

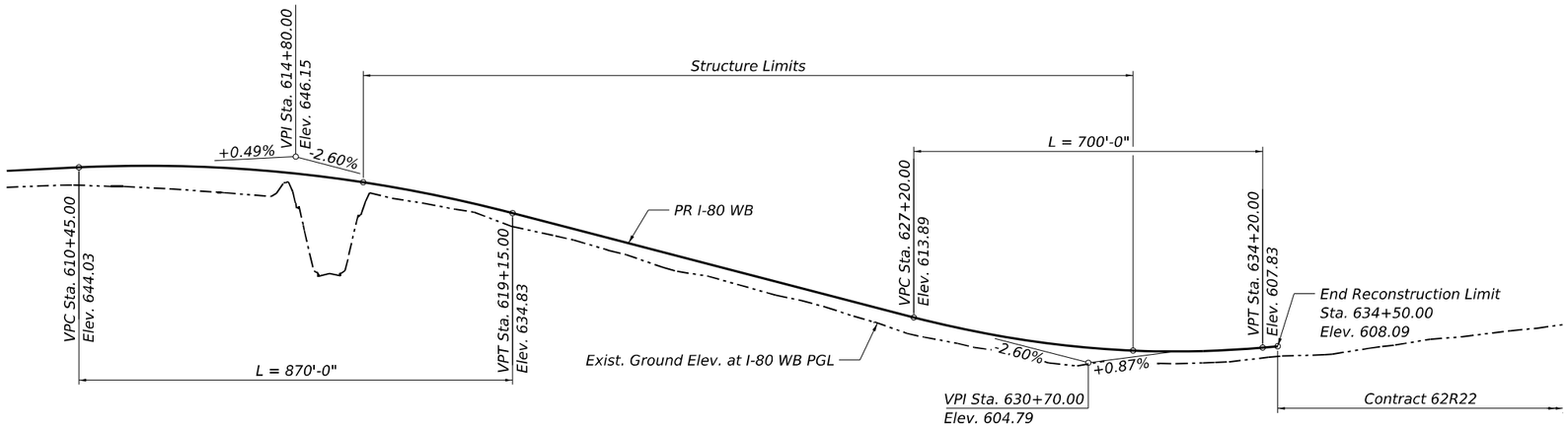

WB I-80 PROFILE GRADE

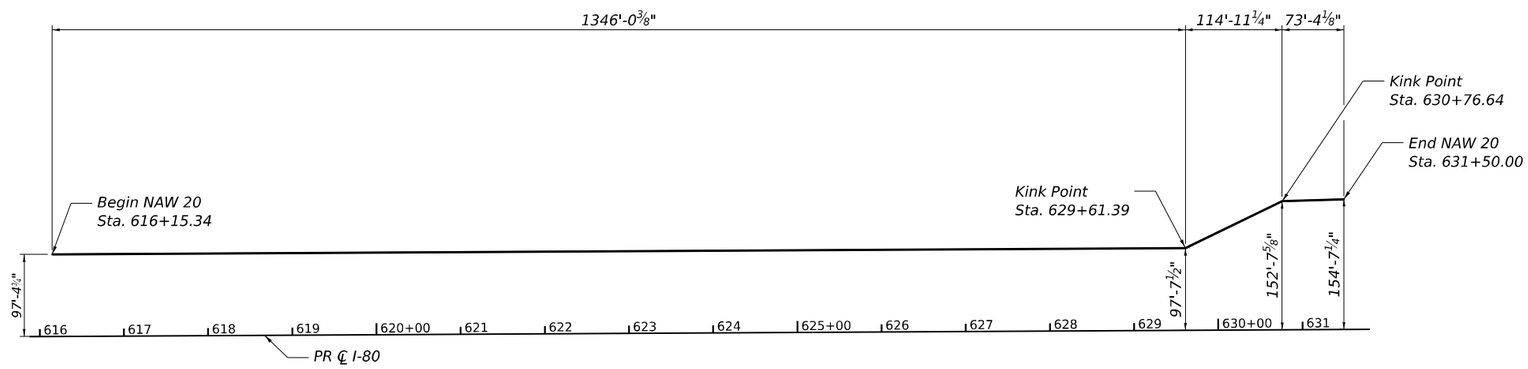

OFFSET SKETCH

(Dimensions shown are to ℄ Noise Wall)

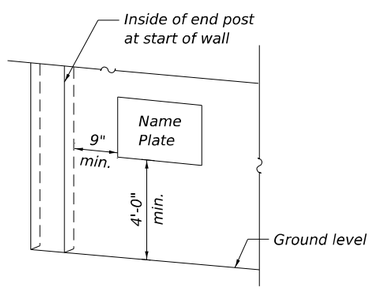

NAME PLATE FOR NOISE ABATEMENT WALL, GROUND MOUNTED

NOISE ABATEMENT WALL
BUILT 202_ BY
STATE OF ILLINOIS
FAI RTE. I-80
SECTION FAI 80 22 BR
FROM STA. 616+15.34 TO STA. 631+50.00
STRUCTURE NO. 016-N1022

NAME PLATE

See Std. 515001

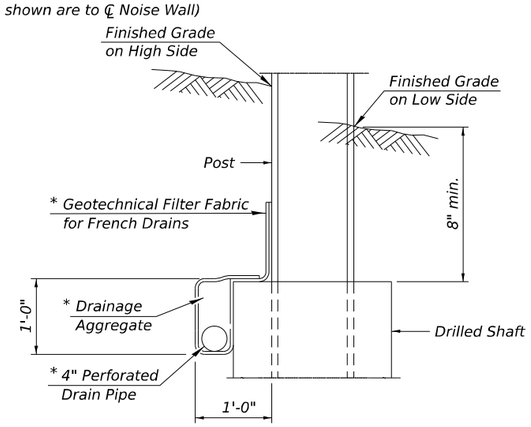

PIPE UNDERDRAIN DETAIL AT DRILLED SHAFTS

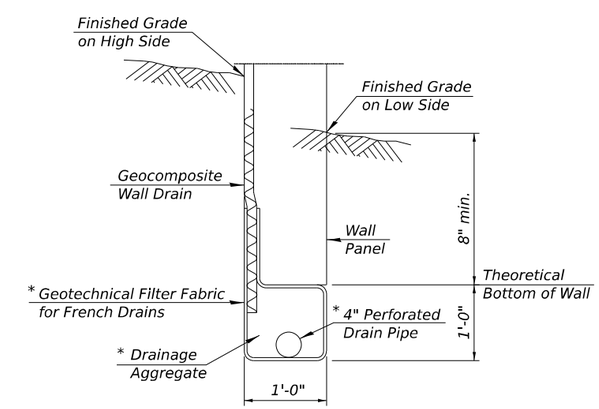

PIPE UNDERDRAIN DETAIL BETWEN DRILLED SHAFTS

* Included in the cost of Pipe Underdrains for Structures 4"

MODEL: BL_PR_I80 - Plan 3 [Sheet]
FILE NAME: pw://transystems-pw.bentley.com:transyscorp-pw2-hosted/Documents/Projects_2018/CH401/401180022/02-TranSystems/CAD/62R89/Sheets/23-Structural/Noise Walls/D162R89-SHT-NAW20-STRUCT-5.dgn

HBM ENGINEERING GROUP, LLC

USER NAME = amkluver	DESIGNED - AGJ	REVISED -	
	DRAWN - AGJ	REVISED -	
PLOT SCALE =	CHECKED - LAB, MAI	REVISED -	
PLOT DATE = 10/5/2023	DATE - 10/6/23	REVISED -	

STATE OF ILLINOIS
DEPARTMENT OF TRANSPORTATION

PROFILE GRADE, OFFSET SKETCH AND DETAILS
NOISE ABATEMENT WALL 20

SCALE: | SHEET S10-5 OF S10-13 SHEETS | STA. | TO STA.

F.A.I. RTE.	SECTION	COUNTY	TOTAL SHEETS	SHEET NO.
I-80	FAI 80 22 BR	WILL	1201	803

CONTRACT NO. 62R89
ILLINOIS | FED. AID PROJECT

Wang Engineering
wangeng@wangeng.com
1145 N. Main Street
Lombard, IL 60148
Telephone: 630-953-9928
Fax: 630-953-9938

BORING LOG NAW20-01

WEI Job No.: 7901-15-01
Client: TranSystems Corporation
Project: I-80 Reconstruction (Houbolt Rd to Center St)
Location: Will County, Illinois

Datum: NAVD 88
Elevation: 635.45 ft
North: 1764757.27 ft
East: 1044200.32 ft
Station: 616+22.26
Offset: 71.802 LT

Elevation (ft)	SOIL AND ROCK DESCRIPTION	Sample No.	SPT Values (blw/6 in)	Qu (tsf)	Moisture Content (%)
635.3	2-inch thick, dark brown SILTY CLAY --TOPSOIL--				
	Medium stiff to very stiff, brown SILTY CLAY, trace gravel; damp to wet --FILL--	1	PUSH	1.50 P	21
		2	PUSH	3.50 P	20
5		3	PUSH	0.75 P	23
		4	PUSH	0.75 P	23
		5	PUSH	1.50 P	27
10		6	PUSH	2.00 P	23
		7	PUSH	1.00 P	27
621.7	Very stiff, gray SILTY CLAY, trace gravel; damp	8	PUSH	3.00 P	27
15					
619.5	Boring terminated at 16.00 ft				
20					

Sample Type / recovery

GENERAL NOTES

Begin Drilling: 02-28-2023 Complete Drilling: 02-28-2023
Drilling Contractor: Wang Testing Services Drill Rig: GEOPROBE HA
Driller: KG&TC Logger: B. Miller Checked by: J. Bensen
Drilling Method: 1" ID HSA; boring backfilled upon completion

WATER LEVEL DATA

While Drilling: 7.00 ft
At Completion of Drilling: 7.00 ft
Time After Drilling: NA
Depth to Water: NA

The stratification lines represent the approximate boundary between soil types; the actual transition may be gradual.

WANGENGINC 7901501.GPJ WANGENG.GDT 5/2/23

BORING LOG NAW20-02

Wang Engineering
wangeng@wangeng.com
1145 N. Main Street
Lombard, IL 60148
Telephone: 630-953-9928
Fax: 630-953-9938

WEI Job No.: 7901-15-01
Client: TranSystems Corporation
Project: I-80 Reconstruction (Houbolt Rd to Center St)
Location: Will County, Illinois

Datum: NAVD 88
Elevation: 633.56 ft
North: 1764709.17 ft
East: 1044387.61 ft
Station: 618+09.87
Offset: 76.224 LT

Elevation (ft)	SOIL AND ROCK DESCRIPTION	Sample No.	SPT Values (blw/6 in)	Qu (tsf)	Moisture Content (%)
633.1	6-inch thick, dark brown SILTY CLAY LOAM --TOPSOIL--				
	Stiff to hard, brown and black SILTY CLAY, trace gravel; damp --FILL-- --RDR 2--	1	2 3 4	2.50 P	25
5		2	2 2 3	2.00 P	22
	--L_L(%)=37, P_I(%)=17-- --%Gravel=2.6-- --%Sand=8.4-- --%Silt=58.3-- --%Clay=30.7-- --A-6 (17)--	3	3 4 5	1.00 P	24
10		4	5 6 8	3.61 B	22
		5	8 9 11	4.54 S	24
620.6	Very stiff, brown and black SILTY CLAY, trace gravel; damp --Buried TOPSOIL--	6	9 11 10	2.13 B	30
618.6	Boring terminated at 15.00 ft				
15					
20					

Sample Type / recovery

GENERAL NOTES

Begin Drilling: 02-01-2023 Complete Drilling: 02-01-2023
Drilling Contractor: Wang Testing Services Drill Rig: 21D120A[78%]
Driller: NC&DZ Logger: N. Karahalios Checked by: J. Bensen
Drilling Method: 3.25" IDA HSA; boring backfilled upon completion

WATER LEVEL DATA

While Drilling: DRY
At Completion of Drilling: DRY
Time After Drilling: NA
Depth to Water: NA

The stratification lines represent the approximate boundary between soil types; the actual transition may be gradual.

WANGENGINC 7901501.GPJ WANGENG.GDT 5/2/23

BORING LOG NAW20-03

Wang Engineering
wangeng@wangeng.com
1145 N. Main Street
Lombard, IL 60148
Telephone: 630-953-9928
Fax: 630-953-9938

WEI Job No.: 7901-15-01
Client: TranSystems Corporation
Project: I-80 Reconstruction (Houbolt Rd to Center St)
Location: Will County, Illinois

Datum: NAVD 88
Elevation: 630.93 ft
North: 1764778.17 ft
East: 1044564.37 ft
Station: 619+86.85
Offset: 78.179 LT

Elevation (ft)	SOIL AND ROCK DESCRIPTION	Sample No.	SPT Values (blw/6 in)	Qu (tsf)	Moisture Content (%)
630.6	4-inch thick, dark brown SILTY CLAY LOAM --TOPSOIL--				
	Very stiff to hard, brown SILTY CLAY, trace gravel; damp --FILL-- --RDR 2--	1	4 4 6	3.00 P	26
5		2	3 6 10	4.26 S	18
625.4	Brown SILTY LOAM, trace gravel; wet				
624.6	Hard, brown SILTY CLAY, trace gravel; damp --RDR 2--	3	8 11 17	5.66 S	19
10		4	5 9 14	7.30 B	21
		5	5 9 13	7.46 B	15
15		6	6 10 14	6.48 B	21
615.9	Boring terminated at 15.00 ft				
20					

Sample Type / recovery

GENERAL NOTES

Begin Drilling: 02-01-2023 Complete Drilling: 02-01-2023
Drilling Contractor: Wang Testing Services Drill Rig: 21D120A[78%]
Driller: NC&DZ Logger: N. Karahalios Checked by: J. Bensen
Drilling Method: 3.25" IDA HSA; boring backfilled upon completion

WATER LEVEL DATA

While Drilling: 5.50 ft
At Completion of Drilling: 6.00 ft
Time After Drilling: NA
Depth to Water: NA

The stratification lines represent the approximate boundary between soil types; the actual transition may be gradual.

WANGENGINC 7901501.GPJ WANGENG.GDT 5/2/23

MODEL: BL_PR_I80 • Plan 3 [Sheet]
FILE NAME: pw://transystems-pw.bentley.com:transyscorp-pw1-hosted/Documents/Projects_2018/CH401/401180022/02-TranSystems/CAD/62R89/Sheets/23-Structural/Noise Walls/D162R89-SHT-NAW20-STRUCT-6.dgn

HBM ENGINEERING GROUP, LLC

USER NAME = amkluver	DESIGNED - AGJ	REVISED -	
	DRAWN - AGJ	REVISED -	
PLOT SCALE =	CHECKED - LAB, MAI	REVISED -	
PLOT DATE = 10/5/2023	DATE - 10/6/23	REVISED -	

STATE OF ILLINOIS
DEPARTMENT OF TRANSPORTATION

SOIL BORINGS 1
NOISE ABATEMENT WALL 20

SCALE: | SHEET S10-6 OF S10-13 SHEETS | STA. | TO STA.

F.A.I. RTE.	SECTION	COUNTY	TOTAL SHEETS	SHEET NO.
I-80	FAI 80 22 BR	WILL	1201	804
		CONTRACT NO. 62R89		
	ILLINOIS	FED. AID PROJECT		

Wang Engineering
wangeng@wangeng.com
1145 N. Main Street
Lombard, IL 60148
Telephone: 630-953-9928
Fax: 630-953-9938

BORING LOG NAW20-04

WEI Job No.: 7901-15-01

Client: TranSystems Corporation
Project: I-80 Reconstruction (Houbolt Rd to Center St)
Location: Will County, Illinois

Datum: NAVD 88
Elevation: 625.53 ft
North: 1764788.53 ft
East: 1044752.61 ft
Station: 621+75.36
Offset: 81.023 LT

Profile	Elevation (ft)	SOIL AND ROCK DESCRIPTION	Depth (ft)	Sample Type / recovery	Sample No.	SPT Values (blw/6 in)	Qu (tsf)	Moisture Content (%)
	625.0	7-inch thick, dark brown SILTY CLAY LOAM --TOPSOIL--						
		Very stiff to hard, brown SILTY CLAY, trace gravel; damp --RDR 2--			1	3 4 4	2.50 P	28
			5		2	3 8 11	> 4.50 P	19
					3	6 11 15	6.31 S	20
			10		4	6 12 20	5.33 S	21
					5	11 17 19	3.69 B	19
	610.5		15		6	7 10 10	3.28 B	17
		Boring terminated at 15.00 ft						
			20					

GENERAL NOTES

Begin Drilling: 02-01-2023 Complete Drilling: 02-01-2023
Drilling Contractor: Wang Testing Services Drill Rig: 21D120A[78%]
Driller: NC&DZ Logger: N. Karahalios Checked by: J. Bensen
Drilling Method: 3.25" IDA HSA; boring backfilled upon completion

WATER LEVEL DATA

While Drilling: DRY
At Completion of Drilling: DRY
Time After Drilling: NA
Depth to Water: NA

The stratification lines represent the approximate boundary between soil types; the actual transition may be gradual.

Wang Engineering
wangeng@wangeng.com
1145 N. Main Street
Lombard, IL 60148
Telephone: 630-953-9928
Fax: 630-953-9938

BORING LOG NAW20-05

WEI Job No.: 7901-15-01

Client: TranSystems Corporation
Project: I-80 Reconstruction (Houbolt Rd to Center St)
Location: Will County, Illinois

Datum: NAVD 88
Elevation: 623.34 ft
North: 1764794.19 ft
East: 1044931.01 ft
Station: 623+53.84
Offset: 79.569 LT

Profile	Elevation (ft)	SOIL AND ROCK DESCRIPTION	Depth (ft)	Sample Type / recovery	Sample No.	SPT Values (blw/6 in)	Qu (tsf)	Moisture Content (%)
	622.6	9-inch thick, dark brown SILTY CLAY LOAM --TOPSOIL--						
		Hard, brown SILTY CLAY, trace gravel; damp to moist --RDR 2--			1	4 8 15	> 4.50 P	22
		--sand seam; wet--	5		2	8 15 22	> 4.50 P	18
	617.8	Brown SANDY LOAM; wet						
	617.1	Stiff to hard, brown to gray SILTY CLAY, trace gravel; damp to moist --RDR 2--			3	6 13 21	9.35 S	17
			10		4	6 12 21	7.38 S	20
					5	6 6 8	1.31 B	22
	608.3		15		6	6 7 11	3.85 B	20
		Boring terminated at 15.00 ft						
			20					

GENERAL NOTES

Begin Drilling: 02-01-2023 Complete Drilling: 02-01-2023
Drilling Contractor: Wang Testing Services Drill Rig: 21D120A[78%]
Driller: NC&DZ Logger: N. Karahalios Checked by: J. Bensen
Drilling Method: 3.25" IDA HSA; boring backfilled upon completion

WATER LEVEL DATA

While Drilling: 4.00 ft
At Completion of Drilling: 6.00 ft
Time After Drilling: NA
Depth to Water: NA

The stratification lines represent the approximate boundary between soil types; the actual transition may be gradual.

HBM ENGINEERING GROUP, LLC

USER NAME = amkluver	DESIGNED - AGJ	REVISED -
	DRAWN - AGJ	REVISED -
PLOT SCALE =	CHECKED - LAB, MAI	REVISED -
PLOT DATE = 10/5/2023	DATE - 10/6/23	REVISED -

STATE OF ILLINOIS
DEPARTMENT OF TRANSPORTATION

SOIL BORINGS 2
NOISE ABATEMENT WALL 20

SCALE: SHEET S10-7 OF S10-13 SHEETS STA. TO STA.

F.A.I. RTE.	SECTION	COUNTY	TOTAL SHEETS	SHEET NO.
I-80	FAI 80 22 BR	WILL	1201	805

CONTRACT NO. 62R89
ILLINOIS FED. AID PROJECT

Wang Engineering
wangeng@wangeng.com
1145 N. Main Street
Lombard, IL 60148
Telephone: 630-953-9928
Fax: 630-953-9938

BORING LOG NAW20-06

WEI Job No.: 7901-15-01

Client: TranSystems Corporation
Project: I-80 Reconstruction (Houbolt Rd to Center St)
Location: Will County, Illinois

Datum: NAVD 88
Elevation: 617.86 ft
North: 1764794.02 ft
East: 1045114.22 ft
Station: 625+36.90
Offset: 72.101 LT

Elevation (ft)	SOIL AND ROCK DESCRIPTION	Depth (ft)	Sample No.	SPT Values (blw/6 in)	Qu (tsf)	Moisture Content (%)
617.5	4-inch thick, dark brown SILTY CLAY LOAM --TOPSOIL--					
	Very stiff to hard, brown SILTY CLAY, trace gravel; damp --RDR 2--		1	3 5 10	2.50 P	21
		5	2	6 10 15	6.15 S	19
			3	9 8 9	4.02 B	21
609.9	Brown SANDY LOAM; wet					
609.1	Stiff to hard, brown SILTY CLAY to SILTY CLAY LOAM, trace gravel; damp to moist --RDR 2--	10	4	4 6 8	1.97 B	19
			5	7 8 13	7.95 B	17
		15	6	7 9 14	5.82 B	16
602.9	Boring terminated at 15.00 ft					
		20				

GENERAL NOTES

Begin Drilling: 02-01-2023 Complete Drilling: 02-01-2023
Drilling Contractor: Wang Testing Services Drill Rig: 21D120A[78%]
Driller: NC&DZ Logger: N. Karahalios Checked by: J. Bensen
Drilling Method: 3.25" IDA HSA; boring backfilled upon completion

WATER LEVEL DATA

While Drilling: 8.00 ft
At Completion of Drilling: 9.00 ft
Time After Drilling: NA
Depth to Water: NA

The stratification lines represent the approximate boundary between soil types; the actual transition may be gradual.

Wang Engineering
wangeng@wangeng.com
1145 N. Main Street
Lombard, IL 60148
Telephone: 630-953-9928
Fax: 630-953-9938

BORING LOG NAW20-07

WEI Job No.: 7901-15-01

Client: TranSystems Corporation
Project: I-80 Reconstruction (Houbolt Rd to Center St)
Location: Will County, Illinois

Datum: NAVD 88
Elevation: 611.23 ft
North: 1764807.24 ft
East: 1045302.33 ft
Station: 627+25.39
Offset: 77.816 LT

Elevation (ft)	SOIL AND ROCK DESCRIPTION	Depth (ft)	Sample No.	SPT Values (blw/6 in)	Qu (tsf)	Moisture Content (%)
610.9	4-inch thick, dark brown SILTY CLAY LOAM --TOPSOIL--					
	Very stiff, brown SILTY CLAY, trace gravel; damp --FILL-- --RDR 2--		1	7 4 5	2.50 P	26
		5	2	5 5 5	2.71 S	26
605.7	Hard, brown SILTY CLAY to SILTY CLAY LOAM, trace gravel; damp --RDR 2--		3	10 12 16	4.67 B	14
		10	4	5 8 15	5.33 S	19
			5	13 14 22	> 10.25 B	20
		15	6	5 8 11	7.13 B	25
596.2	Boring terminated at 15.00 ft					
		20				

GENERAL NOTES

Begin Drilling: 02-01-2023 Complete Drilling: 02-01-2023
Drilling Contractor: Wang Testing Services Drill Rig: 21D120A[78%]
Driller: NC&DZ Logger: N. Karahalios Checked by: J. Bensen
Drilling Method: 3.25" IDA HSA; boring backfilled upon completion

WATER LEVEL DATA

While Drilling: DRY
At Completion of Drilling: DRY
Time After Drilling: NA
Depth to Water: NA

The stratification lines represent the approximate boundary between soil types; the actual transition may be gradual.

HBM ENGINEERING GROUP, LLC

USER NAME = amkluver	DESIGNED - AGJ	REVISED -
	DRAWN - AGJ	REVISED -
PLOT SCALE =	CHECKED - LAB, MAI	REVISED -
PLOT DATE = 10/5/2023	DATE - 10/6/23	REVISED -

STATE OF ILLINOIS
DEPARTMENT OF TRANSPORTATION

SOIL BORINGS 3
NOISE ABATEMENT WALL 20

SCALE: SHEET S10-8 OF S10-13SHEETS STA. TO STA.

F.A.I. RTE.	SECTION	COUNTY	TOTAL SHEETS	SHEET NO.
I-80	FAI 80 22 BR	WILL	1201	806

CONTRACT NO. 62R89
ILLINOIS FED. AID PROJECT

Wang Engineering
wangeng@wangeng.com
1145 N. Main Street
Lombard, IL 60148
Telephone: 630-953-9928
Fax: 630-953-9938

BORING LOG NAW20-08

WEI Job No.: 7901-15-01

Client: TranSystems Corporation
Project: I-80 Reconstruction (Houbolt Rd to Center St)
Location: Will County, Illinois

Datum: NAVD 88
Elevation: 609.27 ft
North: 1764794.32 ft
East: 1045478.39 ft
Station: 629+00.80
Offset: 57.889 LT

Profile	Elevation (ft)	SOIL AND ROCK DESCRIPTION	Depth (ft)	Sample Type / recovery	Sample No.	SPT Values (blw/6 in)	Qu (tsf)	Moisture Content (%)
		18-inch thick ASPHALT --PAVEMENT--						
	607.8	Very stiff to hard, brown and gray SILTY CLAY LOAM, trace gravel; damp --FILL-- --RDR 2--			1	4 4 7	> 4.50 P	16
			5		2	4 10 10	3.00 P	12
	603.8	Stiff to hard, brown and gray SILTY CLAY, trace gravel; damp --RDR 2--			3	9 9 8	> 4.50 P	19
			10		4	9 9 8	4.00 P	16
		--0.5-inch sand seam--			5	3 5 6	1.07 S	17
	594.3		15		6	5 9 12	5.33 B	17
		Boring terminated at 15.00 ft						
			20					

GENERAL NOTES

Begin Drilling: 02-02-2023 Complete Drilling: 02-02-2023
Drilling Contractor: Wang Testing Services Drill Rig: 20D25A [83%]
Driller: NC&DZ Logger: N. Karahalios Checked by: J. Bensen
Drilling Method: 3.25" IDA HSA; boring backfilled upon completion

WATER LEVEL DATA

While Drilling: DRY
At Completion of Drilling: DRY
Time After Drilling: NA
Depth to Water: NA

The stratification lines represent the approximate boundary between soil types; the actual transition may be gradual.

WANGENGINC 79011501.GPJ WANGENG.GDT 5/2/23

Wang Engineering
wangeng@wangeng.com
1145 N. Main Street
Lombard, IL 60148
Telephone: 630-953-9928
Fax: 630-953-9938

BORING LOG NAW20-08A

WEI Job No.: 7901-15-01

Client: TranSystems Corporation
Project: I-80 Reconstruction (Houbolt Rd to Center St)
Location: Will County, Illinois

Datum: NAVD 88
Elevation: 609.38 ft
North: 1764791.68 ft
East: 1045476.03 ft
Station: 628+98.33
Offset: 55.349 LT

Profile	Elevation (ft)	SOIL AND ROCK DESCRIPTION	Depth (ft)	Sample Type / recovery	Sample No.	SPT Values (blw/6 in)	Qu (tsf)	Moisture Content (%)
		--Drilled without sampling to 16 feet--						
			25		9	11 9 9	2.79 B	14
			5		10	9 13 9	2.71 B	17
	582.6	Stiff, black and gray SILTY CLAY, trace gravel; moist --Buried TOPSOIL-- --RDR 2--			11	8 4 6	NR	
	579.4		30		12	4 4 6	1.23 B	26
		Boring terminated at 30.00 ft						
			35					
			10					
			15					
	593.4	Very stiff to hard, brown and gray SILTY CLAY to SILTY CLAY LOAM, trace gravel; damp --FILL-- --RDR 2--			7	8 8 10	7.54 B	16
			20		8	7 7 8	6.72 B	19
			40					

GENERAL NOTES

Begin Drilling: 06-01-2023 Complete Drilling: 06-01-2023
Drilling Contractor: Wang Testing Services Drill Rig: 20D50T [80%]
Driller: RH&AP Logger: A. Scifers Checked by: J. Bensen
Drilling Method: 2.25" IDA HSA; boring backfilled upon completion

WATER LEVEL DATA

While Drilling: DRY
At Completion of Drilling: DRY
Time After Drilling: NA
Depth to Water: NA

The stratification lines represent the approximate boundary between soil types; the actual transition may be gradual.

WANGENGINC 79011501.GPJ WANGENG.GDT 6/6/23

MODEL: BL_PR_I80 - Plan 3 (Sheet)
FILE NAME: pw://transystems-pw.bentley.com:transyscorp-pw2-hosted/Documents/Projects_2018/CH401401180022/02-TranSystems/CAD/62R89/Sheets/23-Structural/Noise Walls/D162R89-SHT-NAW20-STRUCT-5.dgn

HBM ENGINEERING GROUP, LLC

USER NAME = amkluver	DESIGNED - AGJ	REVISED -
	DRAWN - AGJ	REVISED -
PLOT SCALE =	CHECKED - LAB, MAI	REVISED -
PLOT DATE = 10/5/2023	DATE - 10/6/23	REVISED -

STATE OF ILLINOIS
DEPARTMENT OF TRANSPORTATION

SOIL BORINGS 4
NOISE ABATEMENT WALL 20

SCALE: SHEET S10-9 OF S10-13SHEETS STA. TO STA.

F.A.I. RTE.	SECTION	COUNTY	TOTAL SHEETS	SHEET NO.
I-80	FAI 80 22 BR	WILL	1201	807
		CONTRACT NO. 62R89		
	ILLINOIS	FED. AID PROJECT		

Wang Engineering
wangeng@wangeng.com
1145 N. Main Street
Lombard, IL 60148
Telephone: 630-953-9928
Fax: 630-953-9938

BORING LOG NAW20-09

WEI Job No.: 7901-15-01

Client: TranSystems Corporation
Project: I-80 Reconstruction (Houbolt Rd to Center St)
Location: Will County, Illinois

Datum: NAVD 88
Elevation: 607.14 ft
North: 1764803.18 ft
East: 1045680.70 ft
Station: 631+03.30
Offset: 58.679 LT

Elevation (ft)	SOIL AND ROCK DESCRIPTION	Depth (ft)	Sample Type / recovery	Sample No.	SPT Values (blw/6 in)	Qu (tsf)	Moisture Content (%)
	16-inch thick ASPHALT --PAVEMENT--						
605.8	Hard, brown and gray SILTY CLAY, trace gravel; damp --FILL-- --RDR 2--			1	7 7 7	> 4.50 P	15
		5		2	5 4 5	> 4.50 P	19
601.6	Very stiff to hard, brown and gray SILTY CLAY, trace gravel; damp --RDR 2--			3	8 4 4	10.09 B	19
		10		4	9 9 13	3.58 B	17
	--L_L(%)=37, P_L(%)=17-- --%Gravel=1.9-- --%Sand=8.3-- --%Silt=56.1-- --%Clay=33.8-- --A-6 (18)--			5	6 9 5	4.00 P	19
592.1		15		6	5 11 19	6.56 B	16
	Boring terminated at 15.00 ft						
		20					

GENERAL NOTES

Begin Drilling: 02-02-2023 Complete Drilling: 02-02-2023
Drilling Contractor: Wang Testing Services Drill Rig: 20D25A [83%]
Driller: NC&DZ Logger: N. Karahalios Checked by: J. Bensen
Drilling Method: 3.25" IDA HSA; boring backfilled upon completion

WATER LEVEL DATA

While Drilling: DRY
At Completion of Drilling: DRY
Time After Drilling: NA
Depth to Water: NA

The stratification lines represent the approximate boundary between soil types; the actual transition may be gradual.

WANGENGINC 79011501.GPJ WANGENG.GDT 5/2/23

Wang Engineering
wangeng@wangeng.com
1145 N. Main Street
Lombard, IL 60148
Telephone: 630-953-9928
Fax: 630-953-9938

BORING LOG NAW20-09A

WEI Job No.: 7901-15-01

Client: TranSystems Corporation
Project: I-80 Reconstruction (Houbolt Rd to Center St)
Location: Will County, Illinois

Datum: NAVD 88
Elevation: 607.31 ft
North: 1764796.32 ft
East: 1045683.88 ft
Station: 631+06.20
Offset: 51.698 LT

Elevation (ft)	SOIL AND ROCK DESCRIPTION	Depth (ft)	Sample Type / recovery	Sample No.	SPT Values (blw/6 in)	Qu (tsf)	Moisture Content (%)
	--Drilled without sampling to 16 feet--						
				9	6 6 9	3.69 B	19
583.1	Stiff, black SILTY CLAY, trace gravel; moist --Buried TOPSOIL--	25		10	5 6 8	2.38 B	26
580.9	Medium dense, black and brown SAND, trace gravel; moist --RDR 2--			11	4 4 6	1.50 P	25
579.3	--saturatued silt seam-- Stiff, gray SILTY CLAY LOAM to SILTY LOAM, trace gravel; damp --RDR 2--			12	16 6 15	1.00 P	13
577.3	Boring terminated at 30.00 ft	30					
		35					
591.3	Very stiff to hard, brown and gray SILTY CLAY, trace gravel; damp --FILL-- --RDR 2--			7	8 6 8	2.79 B	22
				8	6 8 9	4.26 B	19
		40					

GENERAL NOTES

Begin Drilling: 06-01-2023 Complete Drilling: 06-01-2023
Drilling Contractor: Wang Testing Services Drill Rig: 20D50T [80%]
Driller: RH&AP Logger: A. Scifers Checked by: J. Bensen
Drilling Method: 2.25" IDA HSA; boring backfilled upon completion

WATER LEVEL DATA

While Drilling: 28.50 ft
At Completion of Drilling: DRY
Time After Drilling: NA
Depth to Water: NA

The stratification lines represent the approximate boundary between soil types; the actual transition may be gradual.

WANGENGINC 79011501.GPJ WANGENG.GDT 6/6/23

MODEL: BL_PR_I80 - Plan 3 [Sheet]
FILE NAME: pw://transystems-pw.bentley.com:transyscorp-pw2-hosted/Documents/Projects_2018/CH401/401180022/02-TranSystems/CAD/62R89/Sheets/23-Structural/Noise Walls/D162R89-SHT-NAW20-STRUCT-10.dgn

HBM ENGINEERING GROUP, LLC

USER NAME = amkluver	DESIGNED - AGJ	REVISED -
	DRAWN - AGJ	REVISED -
PLOT SCALE =	CHECKED - LAB, MAI	REVISED -
PLOT DATE = 10/5/2023	DATE - 10/6/23	REVISED -

STATE OF ILLINOIS
DEPARTMENT OF TRANSPORTATION

SOIL BORINGS 5
NOISE ABATEMENT WALL 20

SCALE: SHEET S10-10 OF S10-13SHEETS STA. TO STA.

F.A.I. RTE.	SECTION	COUNTY	TOTAL SHEETS	SHEET NO.
I-80	FAI 80 22 BR	WILL	1201	808
		CONTRACT NO. 62R89		
	ILLINOIS	FED. AID PROJECT		

Wang Engineering
wangeng@wangeng.com
1145 N. Main Street
Lombard, IL 60148
Telephone: 630-953-9928
Fax: 630-953-9938

BORING LOG NAW20-10

WEI Job No.: 7901-15-01

Client: TranSystems Corporation
Project: I-80 Reconstruction (Houbolt Rd to Center St)
Location: Will County, Illinois

Datum: NAVD 88
Elevation: 607.08 ft
North: 1764809.38 ft
East: 1045847.02 ft
Station: 632+69.73
Offset: 58246 LT

Elevation (ft)	SOIL AND ROCK DESCRIPTION	Depth (ft)	Sample No.	SPT Values (blw/6 in)	Qu (tsf)	Moisture Content (%)
605.6	18-inch thick ASPHALT --PAVEMENT--					
605.1	Brown SILTY CLAY LOAM --FILL--					
604.1	Medium stiff, black SILTY CLAY, trace gravel; moist --Buried TOPSOIL--		1	4 5 4	0.50 P	27
	Very stiff to hard, brown and gray SILTY CLAY, trace gravel; damp --RDR 2--	5	2	3 4 8	3.50 P	21
			3	5 10 14	7.13 S	21
598.1	Medium dense, brown SILT, trace gravel; saturated --RDR 2--	10	4	4 8 9	NP	23
595.8	Dense to very dense, brown SANDY GRAVEL; damp --RDR 2--		5	3 15 21	NP	4
		15	6	10 27 32	NP	4
592.1	Boring terminated at 15.00 ft					
		20				

GENERAL NOTES

Begin Drilling: 02-02-2023 Complete Drilling: 02-02-2023
Drilling Contractor: Wang Testing Services Drill Rig: 20D25A [83%]
Driller: NC&DZ Logger: N. Karahalios Checked by: J. Bensen
Drilling Method: 3.25" IDA HSA; boring backfilled upon completion

WATER LEVEL DATA

While Drilling: 9.50 ft
At Completion of Drilling: DRY
Time After Drilling: NA
Depth to Water: NA

The stratification lines represent the approximate boundary between soil types; the actual transition may be gradual.

Wang Engineering
wangeng@wangeng.com
1145 N. Main Street
Lombard, IL 60148
Telephone: 630-953-9928
Fax: 630-953-9938

BORING LOG NAW20-10A

WEI Job No.: 7901-15-01

Client: TranSystems Corporation
Project: I-80 Reconstruction (Houbolt Rd to Center St)
Location: Will County, Illinois

Datum: NAVD 88
Elevation: 607.11 ft
North: 1764809.00 ft
East: 1045850.56 ft
Station: 632+73.25
Offset: 57.727 LT

Elevation (ft)	SOIL AND ROCK DESCRIPTION	Depth (ft)	Sample No.	SPT Values (blw/6 in)	Qu (tsf)	Moisture Content (%)
	--Drilled without sampling to 16 feet--					
		5	9	7 9 9	NP	5
		25	10	8 5 5	NP	8
580.9	Medium dense, gray SILTY LOAM, trace gravel; moist to wet --RDR 2--		11	5 5 5	NP	10
579.9	Hard, gray SILTY CLAY LOAM, trace gravel; damp --RDR 2--					
577.1		30	12	13 31 41	6.23 B	15
	Boring terminated at 30.00 ft					
		35				
		40				

Elevation (ft)	SOIL AND ROCK DESCRIPTION	Depth (ft)	Sample No.	SPT Values (blw/6 in)	Qu (tsf)	Moisture Content (%)
		5				
		10				
		15				
591.1	Medium dense to dense, brown, medium SAND, trace gravel; damp to moist --RDR 2--		7	19 15 15	NP	4
		20	8	8 8 7	NP	5

GENERAL NOTES

Begin Drilling: 06-01-2023 Complete Drilling: 06-01-2023
Drilling Contractor: Wang Testing Services Drill Rig: 20D50T [80%]
Driller: RH&AP Logger: A. Scifers Checked by: J. Bensen
Drilling Method: 2.25" IDA HSA; boring backfilled upon completion

WATER LEVEL DATA

While Drilling: 27.00 ft
At Completion of Drilling: DRY
Time After Drilling: NA
Depth to Water: NA

The stratification lines represent the approximate boundary between soil types; the actual transition may be gradual.

HBM ENGINEERING GROUP, LLC

USER NAME = amkluver	DESIGNED - AGJ	REVISED -
	DRAWN - AGJ	REVISED -
PLOT SCALE =	CHECKED - LAB, MAI	REVISED -
PLOT DATE = 10/5/2023	DATE - 10/6/23	REVISED -

STATE OF ILLINOIS
DEPARTMENT OF TRANSPORTATION

SOIL BORINGS 6
NOISE ABATEMENT WALL 20

SCALE: SHEET S10-11 OF S10-13 SHEETS STA. TO STA.

F.A.I. RTE.	SECTION	COUNTY	TOTAL SHEETS	SHEET NO.
I-80	FAI 80 22 BR	WILL	1201	809
		CONTRACT NO. 62R89		
	ILLINOIS	FED. AID PROJECT		

Wang Engineering
wangeng@wangeng.com
1145 N. Main Street
Lombard, IL 60148
Telephone: 630-953-9928
Fax: 630-953-9938

BORING LOG NAW20-11

WEI Job No.: 7901-15-01

Client: TranSystems Corporation
Project: I-80 Reconstruction (Houbolt Rd to Center St)
Location: Will County, Illinois

Datum: NAVD 88
Elevation: 607.34 ft
North: 1764833.91 ft
East: 1046040.55 ft
Station: 634+64.09
Offset: 75.045 LT

Elevation (ft)	SOIL AND ROCK DESCRIPTION	Depth (ft)	Sample No.	SPT Values (blw/6 in)	Qu (tsf)	Moisture Content (%)
606.8	7-inch thick, dark brown SILTY CLAY LOAM --TOPSOIL--					
	Very stiff to hard, brown SILTY CLAY, trace gravel; damp --RDR 2--		1	5 8 11	6.64 B	22
	--wet spoon--	5	2	3 5 7	3.85 B	24
600.6	Medium dense, brown and gray SILT; saturated --RDR 2--		3	7 8 10	NP	30
		10	4	4 6 7	NP	27
596.8	Dense to very dense, brown SANDY GRAVEL; damp --RDR 2--		5	24 35 29	NP	3
592.3		15	6	12 17 19	NP	5
	Boring terminated at 15.00 ft					
		20				

GENERAL NOTES

Begin Drilling: 02-02-2023 Complete Drilling: 02-02-2023
Drilling Contractor: Wang Testing Services Drill Rig: 20D25A [83%]
Driller: NC&DZ Logger: N. Karahalios Checked by: J. Bensen
Drilling Method: 3.25" IDA HSA; boring backfilled upon completion

WATER LEVEL DATA

While Drilling: 3.25 ft
At Completion of Drilling: DRY
Time After Drilling: NA
Depth to Water: NA

The stratification lines represent the approximate boundary between soil types; the actual transition may be gradual.

Wang Engineering
wangeng@wangeng.com
1145 N. Main Street
Lombard, IL 60148
Telephone: 630-953-9928
Fax: 630-953-9938

BORING LOG NAW20-11A

WEI Job No.: 7901-15-01

Client: TranSystems Corporation
Project: I-80 Reconstruction (Houbolt Rd to Center St)
Location: Will County, Illinois

Datum: NAVD 88
Elevation: 608.65 ft
North: 1764817.08 ft
East: 1046043.35 ft
Station: 634+66.22
Offset: 58.117 LT

Elevation (ft)	SOIL AND ROCK DESCRIPTION	Depth (ft)	Sample No.	SPT Values (blw/6 in)	Qu (tsf)	Moisture Content (%)
	--Drilled without sampling to 16 feet--					
		5	9	11 11 8	NP	4
		10	10	2 2 10	NP	15
582.5	Hard, gray SILTY CLAY LOAM to SILTY LOAM, trace gravel; damp --RDR 2--		11	14 23 24	> 4.50 P	8
580.7	Dense, gray SILTY LOAM, little gravel; damp --RDR 2--		12	8 19 28	NP	9
578.7	Boring terminated at 30.00 ft					
		15	7	7 9 10	NP	4
592.7 592.2	Very stiff (2.5P), gray SILTY CLAY, trace gravel; moist					
	Medium dense, brown, medium SAND, trace to little gravel; damp to moist --RDR 2--	20	8	8 9 11	NP	4

GENERAL NOTES

Begin Drilling: 06-01-2023 Complete Drilling: 06-02-2023
Drilling Contractor: Wang Testing Services Drill Rig: 20D50T [80%]
Driller: RH&AP Logger: A. Scifers Checked by: J. Bensen
Drilling Method: 2.25" IDA HSA; boring backfilled upon completion

WATER LEVEL DATA

While Drilling: DRY
At Completion of Drilling: DRY
Time After Drilling: NA
Depth to Water: NA

The stratification lines represent the approximate boundary between soil types; the actual transition may be gradual.

HBM ENGINEERING GROUP, LLC

USER NAME = amkluver	DESIGNED - AGJ	REVISED -
	DRAWN - AGJ	REVISED -
PLOT SCALE =	CHECKED - LAB, MAI	REVISED -
PLOT DATE = 10/5/2023	DATE - 10/6/23	REVISED -

STATE OF ILLINOIS
DEPARTMENT OF TRANSPORTATION

SOIL BORINGS 7
NOISE ABATEMENT WALL 20

SCALE: SHEET S10-12 OF S10-13 SHEETS STA. TO STA.

F.A.I. RTE.	SECTION	COUNTY	TOTAL SHEETS	SHEET NO.
I-80	FAI 80 22 BR	WILL	1201	810
		CONTRACT NO. 62R89		
	ILLINOIS	FED. AID PROJECT		

NOTES:
1. EACH SIDE OF THE NOISE WALL PANELS SHALL HAVE A ROLLED ASHLAR STONE FINISH. THE FINISH SHALL HAVE A 1 ½" RELIEF FOR NOISE ABATEMENT WALL, GROUND MOUNTED AND A ¾" RELIEF FOR NOISE ABATEMENT WALL, STRUCTURE MOUNTED. THE COLOR OF BOTH SIDES OF THE PANELS, PLAIN BAND, POSTS AND ALL OTHER VISIBLE ELEMENTS SHALL FOLLOW THE SPECIAL PROVISIONS.

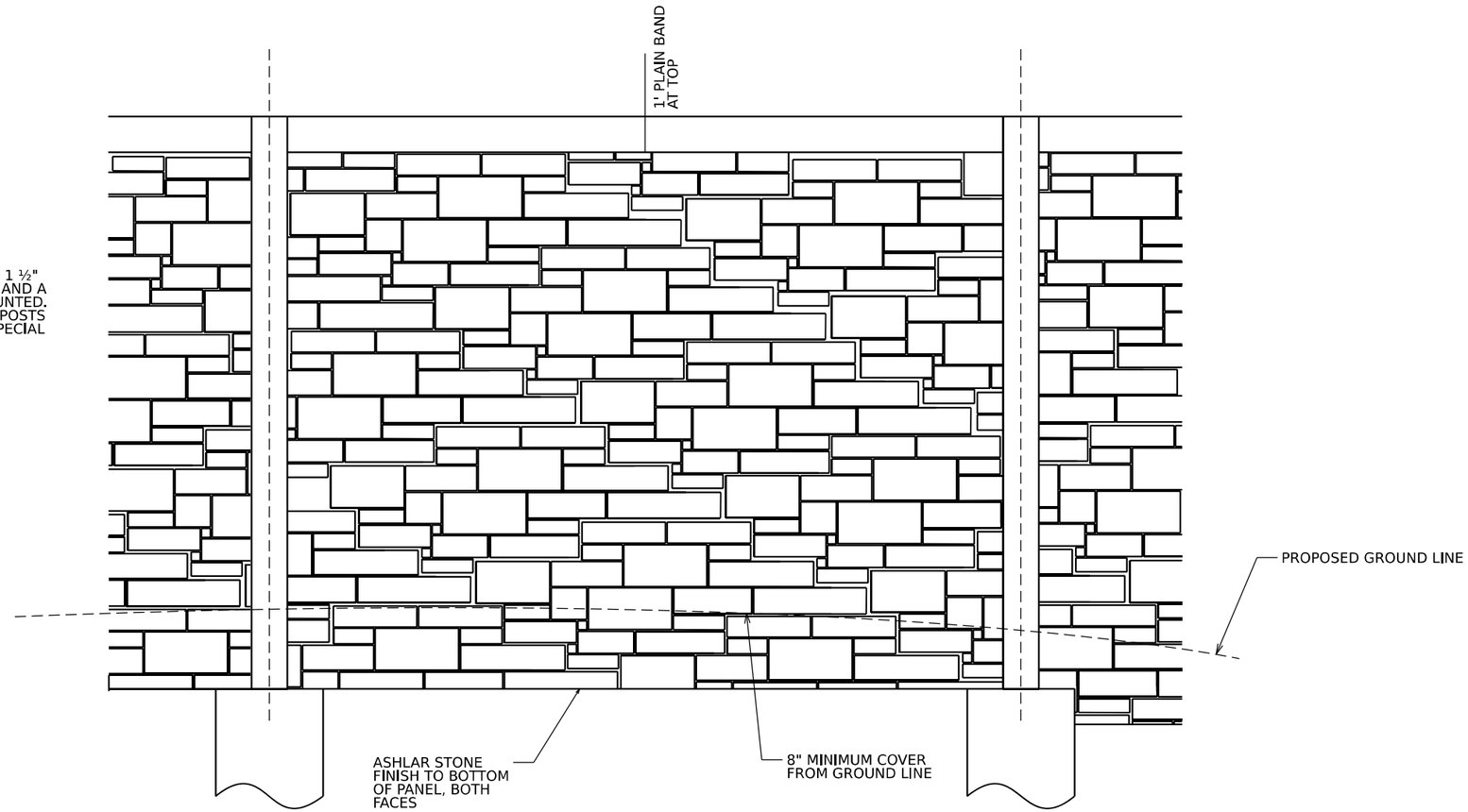

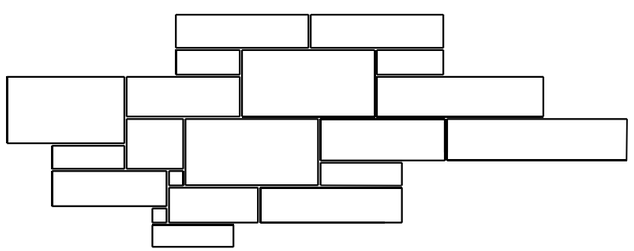

ENLARGED PATTERN DETAIL

STONE PATTERN SIZES:
3" x 3" - 14" x 28"

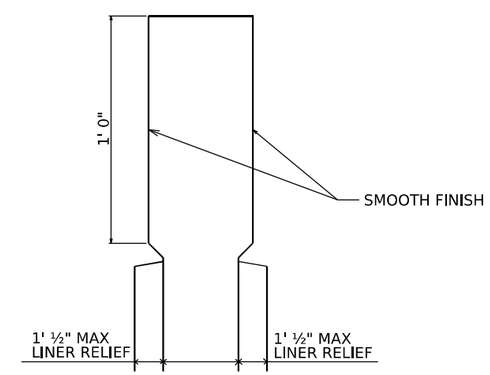

ENLARGED CAP DETAIL

MODEL: NOISE WALLS DETAILS
FILE NAME: pw://transystems-pw.bentley.com:transyscorp-pw1-hosted/Documents/Projects_2018/CH401/401180022/02-TranSystems/CAD/62R89/Sheets/24-Noise Abatement Walls/Noise Walls Details

TRANSYSTEMS	USER NAME = amkluver	DESIGNED - VLJ	REVISED -	STATE OF ILLINOIS DEPARTMENT OF TRANSPORTATION	ASHLAR STONE FINISH NOISE ABATEMENT WALL 20			F.A.I. RTE.	SECTION	COUNTY	TOTAL SHEETS / SHEET NO.
		DRAWN - AMK	REVISED -					I-80	FAI 80 22 BR	WILL	1201 / 811
	PLOT SCALE =	CHECKED - JMG	REVISED -							CONTRACT NO. 62R89	
	PLOT DATE = 10/5/2023	DATE - 10/6/23	REVISED -		SCALE: NONE	SHEET S10-13 OF S10-13 SHEETS	STA. TO STA.		ILLINOIS	FED. AID PROJECT	

Benchmark: Found 3½" DOH brass Disc in top centerline of bridge wall at southwesterly corner of eastbound I-80 bridge over Midland Avenue at Station 614+73.21, Offset 69.14' RT, Elev. 646.207. See Alignment, Tie and Benchmark Sheets.

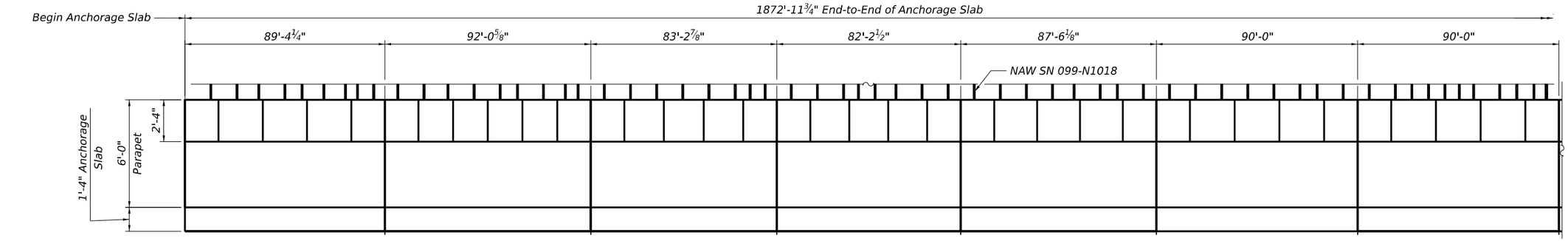

ELEVATION

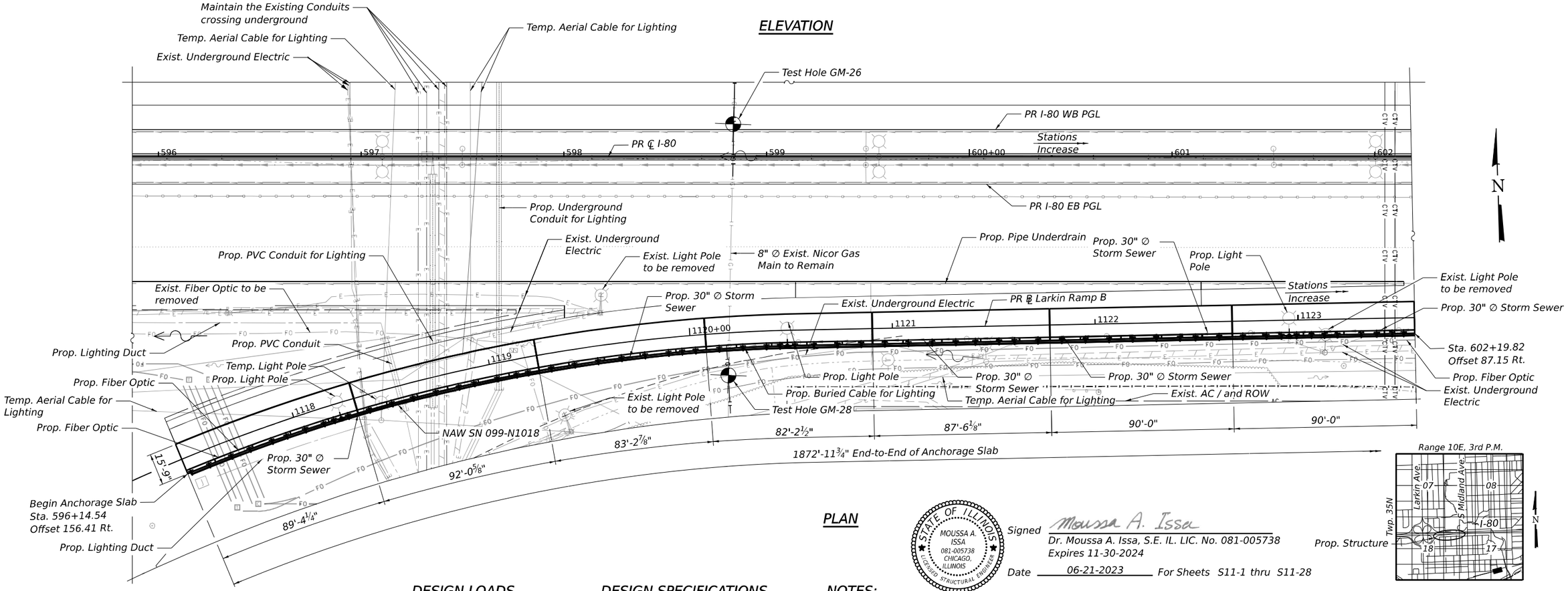

PLAN

STATE OF ILLINOIS
MOUSSA A. ISSA
081-005738
CHICAGO, ILLINOIS
LICENSED STRUCTURAL ENGINEER

Signed Moussa A. Issa
Dr. Moussa A. Issa, S.E. IL. LIC. No. 081-005738
Expires 11-30-2024

Date 06-21-2023 For Sheets S11-1 thru S11-28

ABBREVIATIONS

Exp.	Expansion	F.F.	Front Face
Jt.	Joint	B.F.	Back Face
PGL	Profile Grade Line	E.E.	Each End
Lt.	Left	Prop.	Proposed
Rt.	Right	PR	Proposed
Spa.	Space	Exist.	Existing
Sta.	Station	Temp.	Temporary
Elev.	Elevation	ROW	Right of Way
Typ.	Typical	EOP	Edge of Pavement
PJF	Preformed Joint Filler	NAW	Noise Abatement Wall

DESIGN LOADS

Overturning and Sliding (Static)
106k

Strength (Dynamic)
260k

DESIGN SPECIFICATIONS

2020 AASHTO LRFD Bridge Design Specifications, 9th Edition

DESIGN STRESSES

FIELD UNITS

f'c = 4,000 psi (Concrete)
fy = 60,000 psi (Reinforcement)

NOTES:

1. For General Notes, Index of Sheets, Legend, and Total Bill of Material, see Sheet S11-4 .
2. Stations and offsets are measured along ℄ I-80 to outside edge of anchorage slab.
3. For proposed utilities, see ITS, lighting, drainage, and SUE plans.
4. For details of NAW SN 099-N1018, see plans in this contract.

APPROVED
For Structural Adequacy Only
Engineer of Bridges & Structures

LOCATION SKETCH

GENERAL PLAN AND ELEVATION 1
ANCHORAGE SLAB ALONG I-80
F.A.I. RTE. I-80
SEC. F.A.I. 80 22 BR
WILL COUNTY
STA. 596+14.54 TO STA. 614+78.28
(ANCHORAGE SLAB 16)

HBM ENGINEERING GROUP, LLC

USER NAME = jana.issa	DESIGNED - JMI	REVISED -	
	DRAWN - JMI	REVISED -	
PLOT SCALE =	CHECKED - SK, MAI	REVISED -	
PLOT DATE = 12/1/2023	DATE - 10/6/23	REVISED -	

STATE OF ILLINOIS
DEPARTMENT OF TRANSPORTATION

ANCHORAGE SLAB 16
GENERAL PLAN AND ELEVATION 1

SCALE: | SHEET S11-1 OF S11-28 SHEETS | STA. | TO STA.

F.A.I. RTE.	SECTION	COUNTY	TOTAL SHEETS	SHEET NO.
I-80	FAI 80 22 BR	WILL	1201	812
		CONTRACT NO. 62R89		
	ILLINOIS	FED. AID PROJECT		

MODEL: BL_PR_I80 - Plan 3 [Sheet]
FILE NAME: pw://transystems-pw.bentley.com:TRANSYSCORP-PW1-HOSTED/Documents/Projects_2018/CH401/401180022/02-TranSystems/CAD/62R89/Sheets/23-Structural/Moment Slabs/D162R89-SHT-MOMENTSLAB16-STRUCT-1

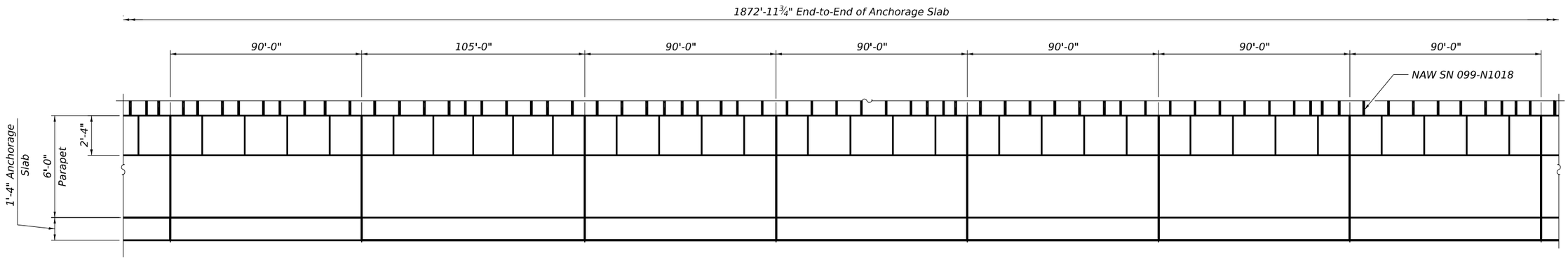

ELEVATION

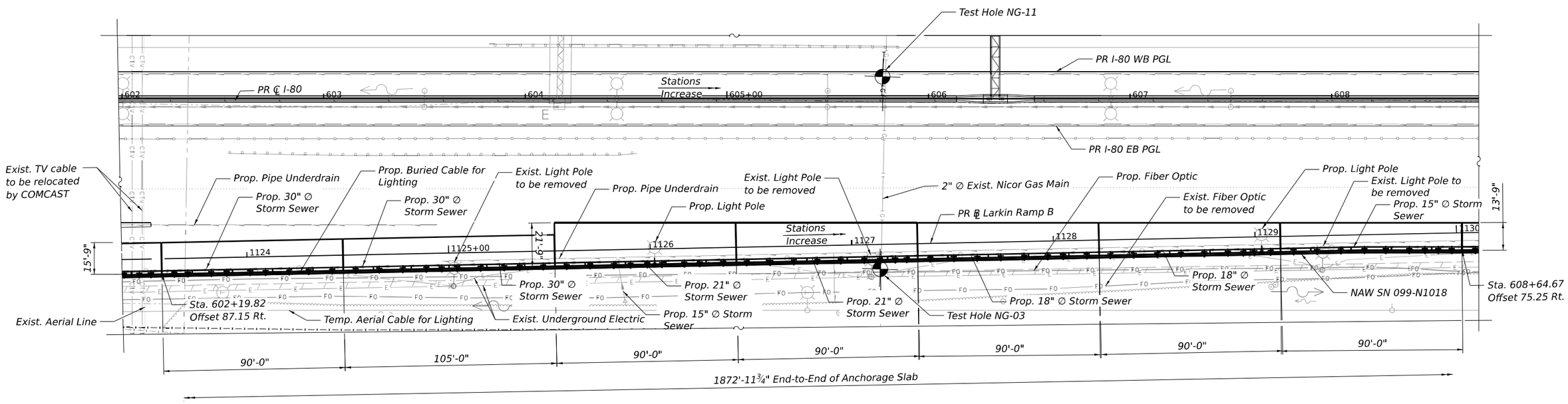

PLAN

N

NOTES:

1. For General Notes, Index of Sheets, Legend, and Total Bill of Material, see Sheet S11-4 .
2. Stations and offsets are measured along ℄ I-80 to outside edge of anchorage slab.
3. For proposed utilities, see ITS, lighting, drainage, and SUE plans.
4. For details of NAW SN 099-N1018, see plans in this contract.

MODEL: BL_PR_I80 + Plan 3 [Sheet]
FILE NAME: pw://transystems-pw.bentley.com:TRANSYSCORP-PW1-HOSTED/Documents/Projects_2018/CH401/401180022/02-TransSystems/CAD/62R89/Sheets/23-Structural/Moment Slabs/D162R89-SHT-MOMENTSLAB16-STRUCT-2

HBM ENGINEERING GROUP, LLC	USER NAME = Jana.Issa	DESIGNED - JMI	REVISED -	STATE OF ILLINOIS DEPARTMENT OF TRANSPORTATION	ANCHORAGE SLAB 16 GENERAL PLAN AND ELEVATION 2	F.A.I. RTE.	SECTION	COUNTY	TOTAL SHEETS	SHEET NO.
		DRAWN - JMI	REVISED -			I-80	FAI 80 22 BR	WILL	1201	813
	PLOT SCALE =	CHECKED - SK, MAI	REVISED -					CONTRACT NO. 62R89		
	PLOT DATE = 12/1/2023	DATE - 10/6/23	REVISED -		SCALE: SHEET S11-2 OF S11-28 SHEETS STA. TO STA.		ILLINOIS	FED. AID PROJECT		

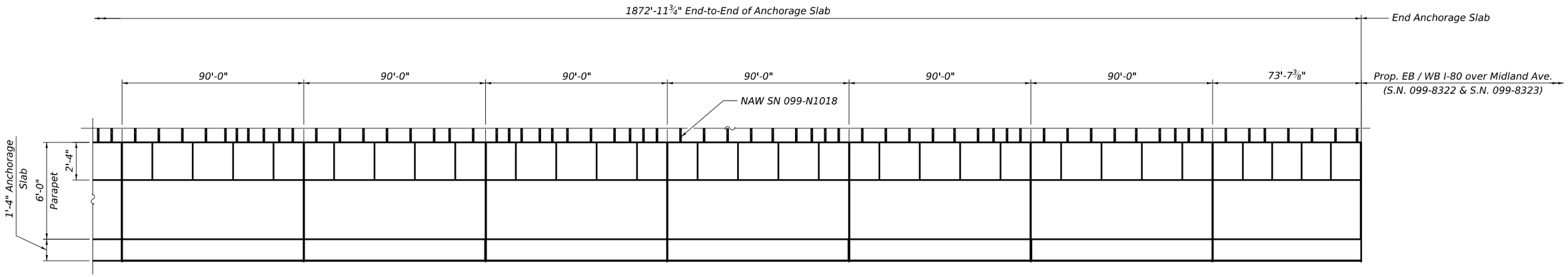

ELEVATION

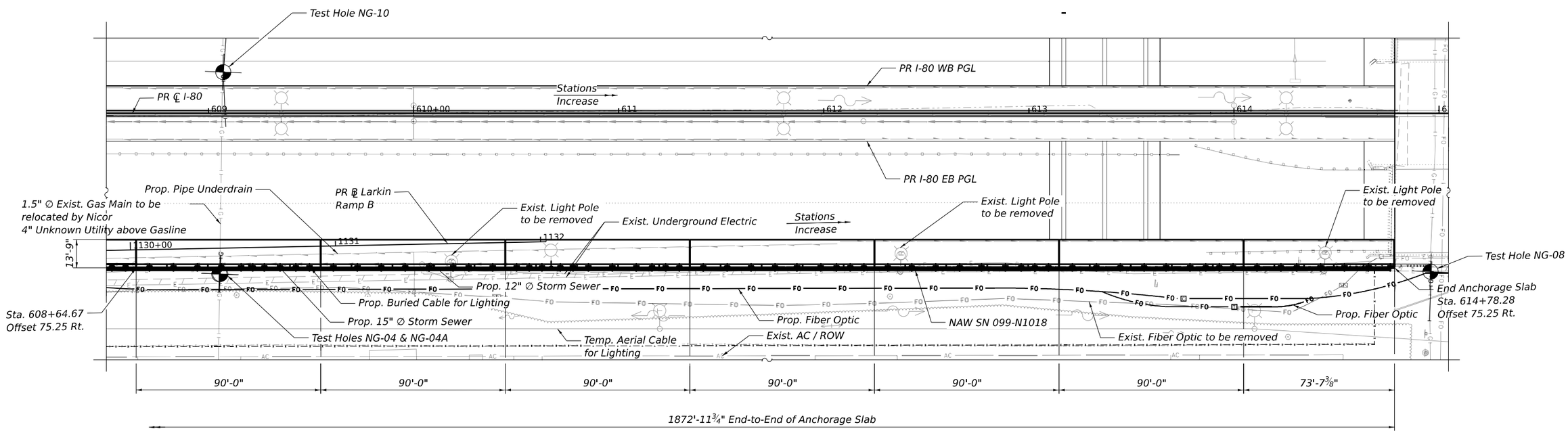

PLAN

N

NOTES:

1. For General Notes, Index of Sheets, Legend, and Total Bill of Material, see Sheet S11-4 .
2. Stations and offsets are measured along ℄ I-80 to outside edge of anchorage slab.
3. For proposed utilities, see ITS, lighting, drainage, and SUE plans.
4. For details of NAW SN 099-N1018, see plans in this contract.

MODEL: BL_PR_I80 + Plan 3 [Sheet]
FILE NAME: pw://transystems-pw.bentley.com:TRANSYSCORP-PW1-HOSTED/Documents/Projects_2018/CH401/401180022/02-TranSystems/CAD/62R89/Sheets/23-Structural/Moment Slabs/D162R89-SHT-MOMENTSLAB16-STRUCT-3

HBM ENGINEERING GROUP, LLC	USER NAME = Jana.Issa	DESIGNED - JMI	REVISED -	STATE OF ILLINOIS DEPARTMENT OF TRANSPORTATION	ANCHORAGE SLAB 16 GENERAL PLAN AND ELEVATION 3	F.A.I. RTE.	SECTION	COUNTY	TOTAL SHEETS	SHEET NO.
		DRAWN - JMI	REVISED -			I-80	FAI 80 22 BR	WILL	1201	814
	PLOT SCALE =	CHECKED - SK, MAI	REVISED -					CONTRACT NO. 62R89		
	PLOT DATE = 12/1/2023	DATE - 10/6/23	REVISED -		SCALE: SHEET S11-3 OF S11-28 SHEETS STA. TO STA.		ILLINOIS	FED. AID PROJECT		

GENERAL NOTES

CAST-IN-PLACE CONCRETE

1. All exposed concrete edges shall have 1¾"x45° chamfer, except where shown otherwise. Chamfer on vertical edges shall be continued a minimum of one foot below finished ground level.

REINFORCEMENT BARS

1. Reinforcement bars designated "(E)" shall be epoxy coated.

2. Bars noted thus, 3x2-#5 indicates 3 lines of bars with 2 lengths of bars per line.

CONSTRUCTION

1. Plan dimensions and details relative to the existing structure have been taken from existing plans are subject to nominal construction variations. The Contractor shall field verify existing dimensions and details affecting new construction and make necessary approved adjustments prior to construction or ordering of materials. Such variations shall not be cause for additional compensation for a change in scope of the work, however, the Contractor will be paid for the quantity actually furnished at the unit price bid for the work.

2. No construction joint except those on the plans shall be allowed unless approved by the engineer.

3. The contractor may request copies of existing construction plans that are currently on file with the IDOT. The request shall be in writing with the understanding that any reproduction cost will be at the contractor's expense at no additional cost to the IDOT.

4. It shall be the Contractor's responsibility to verify the location of all utilities prior to starting construction. Contact J.U.L.I.E., 800-892-0123.

5. The contractor shall field verify location of the existing utilities prior to construction. The contractor shall take precautions not to damage existing utilities. Any damage shall be repaired by the Contractor at no additional cost.

INDEX OF SHEETS

TOTAL BILL OF MATERIAL

ITEM	UNIT	TOTAL
Concrete Superstructure	Cu Yd	1,895.2
Protective Coat	Sq Yd	1,439
Reinforcement Bars, Epoxy Coated	Pound	425,070
Noise Abatement Wall Anchor Rod Assembly	Each	188

UTILITY CROSSING

UTILITY	STATION*	OFFSET (RT)*	ELEVATION	COMMENT
Prop. Buried Cable	596+21.65 to 610+67.10	153.76' to 75.50'	-	Parallel to slab (3 in. outside the edge of slab). Station and offsets are measured along the utility.
Temp. Aerial Cable for Lighting	596+56.86 to 598+00.59	112.89' to 113.67'	-	Parallel to slab within 10 feet of slab. Station and offsets are measured along the utility.
Prop. Fiber Optic	596+29.93	148.31'	-	-
Prop. Fiber Optic	596+39.38	144.67'	-	-
Temp. Aerial Cable for Lighting	596+84.78	129.01'	-	-
Prop. Light Pole	596+89.84	127.45'	-	-
Exist. Underground Electric	597+01.12	124.09'	-	-
Exist. Underground Electric	597+01.14	124.08'	-	-
Exist. Underground Electric	597+01.46	123.99'	-	-
Exist. Underground Electric	597+01.89	123.87'	-	-
Temp. Aerial Cable for Lighting	597+10.36	121.47'	-	-
Prop. PVC Conduit	597+19.65	118.95'	-	-
Exist. Underground Electric	597+28.27	116.71'	-	-
Exist. Underground Electric	597+32.30	115.70'	-	-
Prop. Lighting Duct	596+24.03 to 597+04.55	159.62' to 131.79'	-	Parallel to slab within 10 feet of slab. Station and offsets are measured along the utility.
Prop. PVC Conduit for Lighting	597+35.35	114.95'	-	-
Exist. Underground Electric	597+38.34	114.22'	-	-
Exist. Underground Electric	597+42.40	113.31'	-	-
Exist. Underground Electric	597+54.10	110.6'	-	-
Prop. Underground Conduit for Lighting	597+68.05	107.66'	-	-
Exist. Underground Fiber Optic	597+82.45	104.89'	-	-
Temp. Aerial Cable for Lighting	597+82.72	104.84'	-	-
Prop. Fiber Optic	598+64.43 to 614+78.28	105.85' to 83.03'	-	Parallel to outside edge of slab within 10 feet of slab. Station and offsets are measured along the utility.
8" Exist. Nicor Gas Main	598+81.55	92.84'	±631.41'	Top of utility elevation verified by test hole GM-28
Exist. Underground Electric	598+81.84 to 614+78.28	104.59' to 69.81'	-	Within 10 feet of slab. Station and offsets are measured along the utility.
Prop. Light Pole	599+10.30	91.60'	-	-
Exist. Underground Electric	600+07.52 to 614+78.28	101.39' to 76.79'	-	Within 10 feet of slab. Station and offsets are measured along the utility.
Prop. Light Pole	601+57.77	86.64'	-	-
Exist. TV Cable	602+05.00	85.69'	-	-
Exist. TV Cable	602+10.00	85.59'	-	-
Exist. Aerial Line	602+11.15	85.57'	-	-
Prop. Light Pole	604+64.25	80.51'	-	-
2" Exist. Nicor Gas Main	605+76.64	78.26'	±635.00	Top of utility elevation verified by test hole NG-03
Prop. Light Pole	607+65.30	74.49'	-	-
1.5" Exist. Nicor Gas Main	609+05.56	73.50'	±635.14	Top of utility elevation verified by test hole NG-04
4" Unknown Utility	609+05.56	73.50'	±637.39	Top of utility elevation verified by test hole NG-04A
Prop. Light Pole	610+67.10	73.50'	-	-
Exist. Fiber Optics	614+64.90	73.49'	-	-

*Stations and offsets are taken to the front face of parapet unless otherwise noted

LEGEND

- Exist. Underground Telephone
- Exist. Underground Electric
- Prop. Underground Electric
- Prop. Lighting Cable
- Exist. Underground Gas
- Exist. Aerial Line
- Exist. Underground Fiber Optic
- Prop. Underground Fiber Optic
- Exist. Underground Cable
- Exist. Pipe Underdrain
- Exist. Cable Barrier
- Exist. Shoulder / EOP
- Prop. Pipe Underdrain
- Exist. Storm Sewer
- Prop. Storm Sewer
- Prop. Guardrail
- Exist. Guardrail
- Exist. Fence
- Exist. Access Control & ROW
- Exist. Cable Barrier
- Exist. Lighting
- Prop. Lighting
- Prop. Drainage
- Prop. Concrete Headwall
- Soil Boring
- Prop. Communications Vault (IDOT)
- Prop. Communications Vault (Third Party)
- Prop. Junction Box Attached to Structure
- Exist. Double Handhole

MODEL: BL_PR_I80 + Plan 3 [Sheet]
FILE NAME: pw://transystems+pw.bentley.com:TRANSYSCORP-PW1-HOSTED/Documents/Projects_2018/CH401/401180022/02-TranSystems/CAD/62R89/Sheets/23-Structural/Moment Slabs/D162R89-SHT-MOMENTSLAB16-STRUCT-4

HBM ENGINEERING GROUP, LLC

USER NAME = Jana.Issa	DESIGNED - JMI	REVISED -	
	DRAWN - JMI	REVISED -	
PLOT SCALE =	CHECKED - SK, MAI	REVISED -	
PLOT DATE = 12/1/2023	DATE - 10/6/23	REVISED -	

STATE OF ILLINOIS
DEPARTMENT OF TRANSPORTATION

ANCHORAGE SLAB 16
GENERAL NOTES, INDEX OF SHEETS, AND TOTAL BILL OF MATERIAL

SCALE: | SHEET S11-4 OF S11-28 SHEETS | STA. | TO STA.

F.A.I. RTE.	SECTION	COUNTY	TOTAL SHEETS	SHEET NO.
I-80	FAI 80 22 BR	WILL	1201	815
		CONTRACT NO. 62R89		
	ILLINOIS	FED. AID PROJECT		

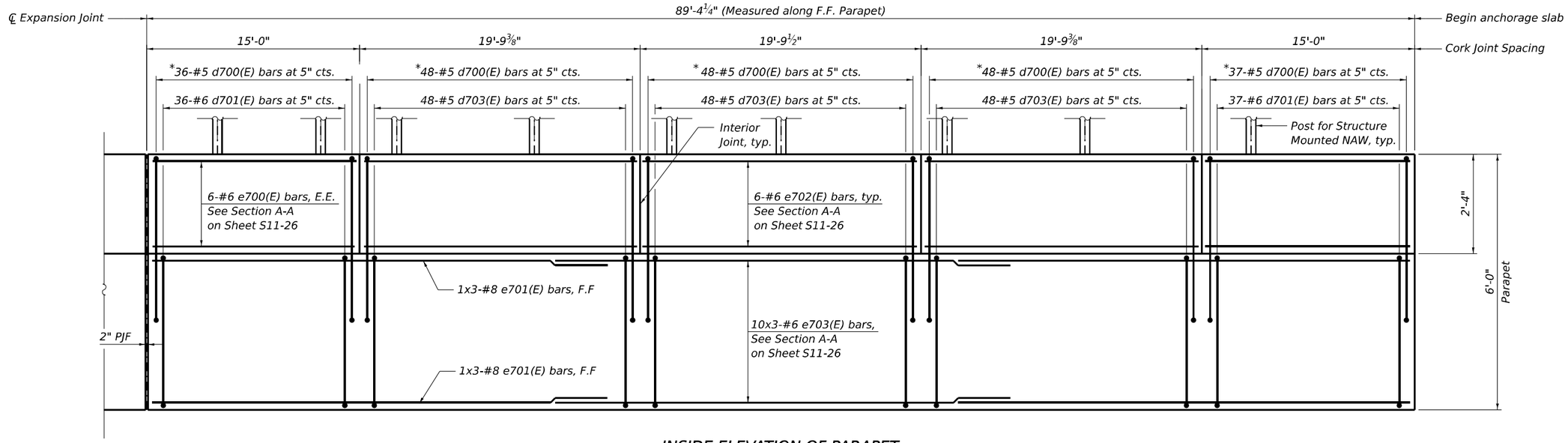

INSIDE ELEVATION OF PARAPET

(Segment 1)

* Tilt 7-d700(E) bars to fit at area of noise abatement anchor rod assembly locations.

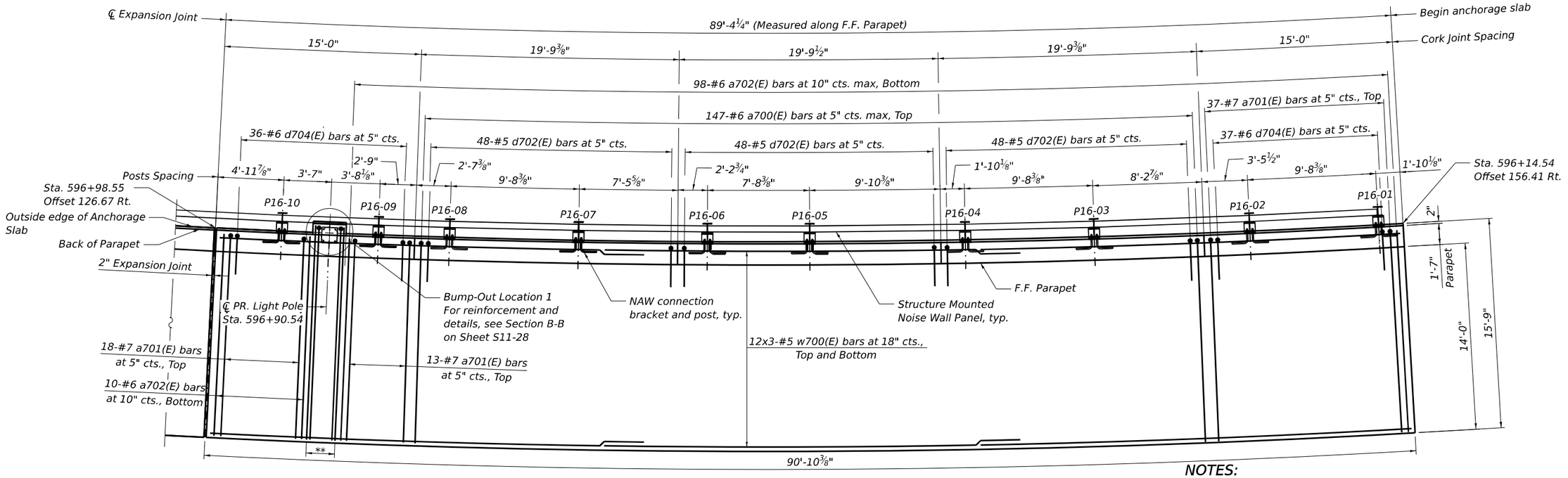

PLAN

(Segment 1)

**7-#7 a729(E) bars at 5" cts., Top
4-#6 a730(E) bars 10" cts. max, Bottom

N

NOTES:

1. Stations and offsets are measured along ℄ I-80 to outside edge of anchorage slab.
2. For Bar diagrams, Expansion, Construction, and Cork Joint Details, and Bill of Material, see Sheet S11-26.
3. For Noise Abatement Wall connection details, see Sheet S11-27.
4. Cost of 2" PJF is not paid for separately and shall be included with Concrete Superstructure.

MODEL: BL_PR_I80 • Plan 3 [Sheet]
FILE NAME: pw://transystems-pw.bentley.com:TRANSYSCORP-PW1-HOSTED/Documents/Projects_2018/CH401/401180022/02-TranSystems/CAD/62R89/Sheets/23-Structural/Moment Slabs/D16ZR89-SHT-MOMENTSLAB16-STRUCT-5

HBM ENGINEERING GROUP, LLC

USER NAME = jana.issa	DESIGNED - JMI	REVISED -	
	DRAWN - JMI	REVISED -	
PLOT SCALE =	CHECKED - SK, MAI	REVISED -	
PLOT DATE = 12/1/2023	DATE - 10/6/23	REVISED -	

STATE OF ILLINOIS
DEPARTMENT OF TRANSPORTATION

ANCHORAGE SLAB 16
ANCHORAGE SLAB PLAN AND ELEVATION 1

SCALE: | SHEET S11-5 OF S11-28 SHEETS | STA. | TO STA.

F.A.I. RTE.	SECTION	COUNTY	TOTAL SHEETS	SHEET NO.
I-80	FAI 80 22 BR	WILL	1201	816

CONTRACT NO. 62R89

ILLINOIS | FED. AID PROJECT

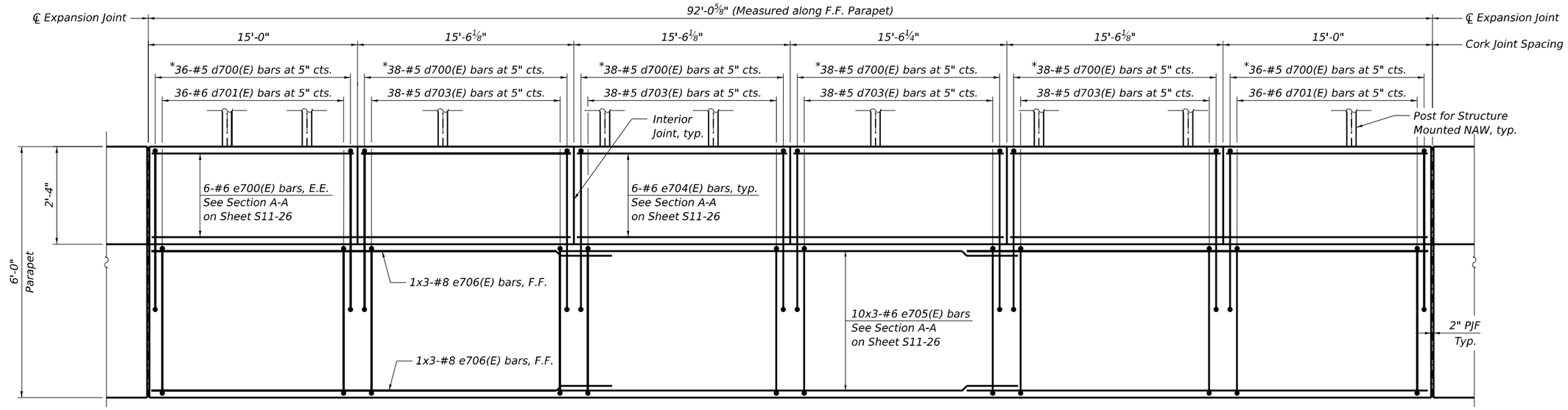

INSIDE ELEVATION OF PARAPET

(Segment 2)

* Tilt 7-d700(E) bars to fit at area of noise abatement anchor rod assembly locations.

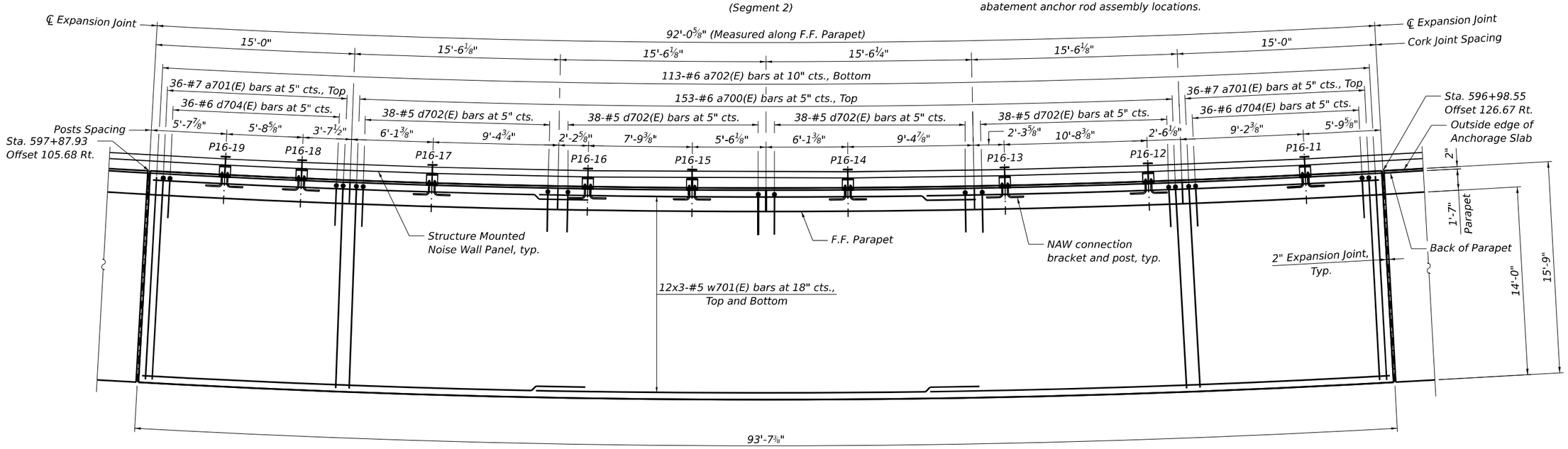

PLAN

(Segment 2)

N

NOTES:

1. Stations and offsets are measured along ℄ I-80 to outside edge of anchorage slab.
2. For Bar diagrams, Expansion, Construction, and Cork Joint Details, and Bill of Material, see Sheet S11-26.
3. For Noise Abatement Wall connection details, see Sheet S11-27.
4. Cost of 2" PJF is not paid for separately and shall be included with Concrete Superstructure.

MODEL: BL_PR_I80 - Plan 3 [Sheet]
FILE NAME: pw://transystems-pw.bentley.com:TRANSYSCORP-PW1-HOSTED/Documents/Projects_2018/CH401/401180022/02-TranSystems:CAD/62R89/Sheets/23-Structural/Moment Slabs/D162R89-SHT-MOMENTSLAB16-STRUCT-6

HBM ENGINEERING GROUP, LLC

USER NAME = Jana.Issa	DESIGNED - JMI	REVISED -	
	DRAWN - JMI	REVISED -	
PLOT SCALE =	CHECKED - SK, MAI	REVISED -	
PLOT DATE = 12/1/2023	DATE - 10/6/23	REVISED -	

STATE OF ILLINOIS
DEPARTMENT OF TRANSPORTATION

ANCHORAGE SLAB 16
ANCHORAGE SLAB PLAN AND ELEVATION 2

SCALE: | SHEET S11-6 OF S11-28 SHEETS | STA. TO STA.

F.A.I. RTE.	SECTION	COUNTY	TOTAL SHEETS	SHEET NO.
I-80	FAI 80 22 BR	WILL	1201	817
		CONTRACT NO. 62R89		
	ILLINOIS	FED. AID PROJECT		

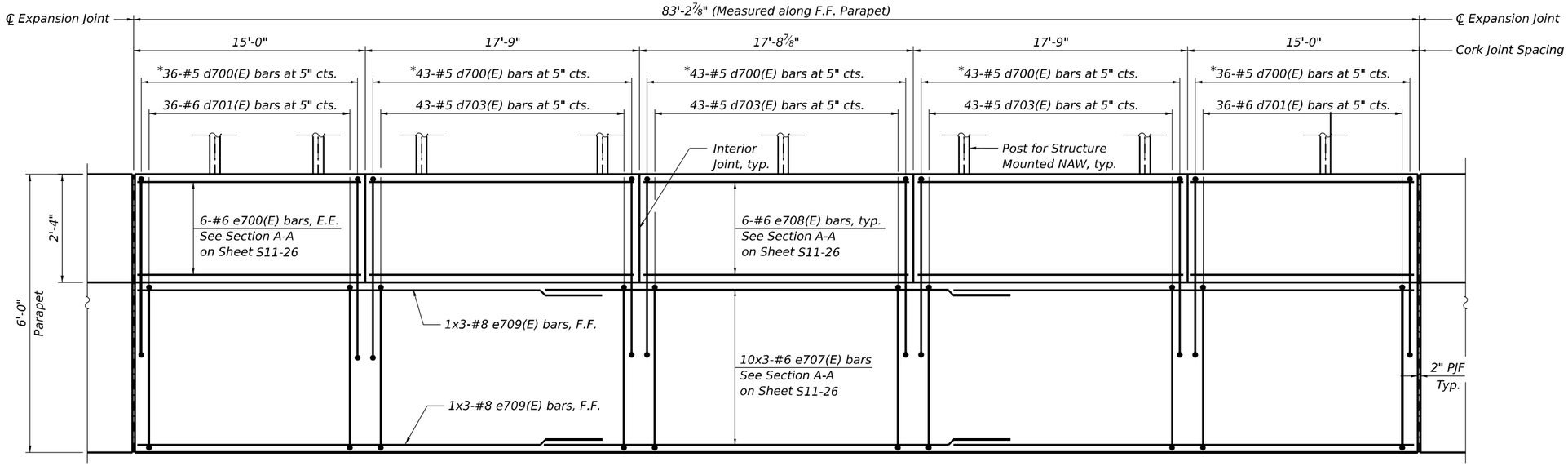

INSIDE ELEVATION OF PARAPET

(Segment 3)

* Tilt 7-d700(E) bars to fit at area of noise abatement anchor rod assembly locations.

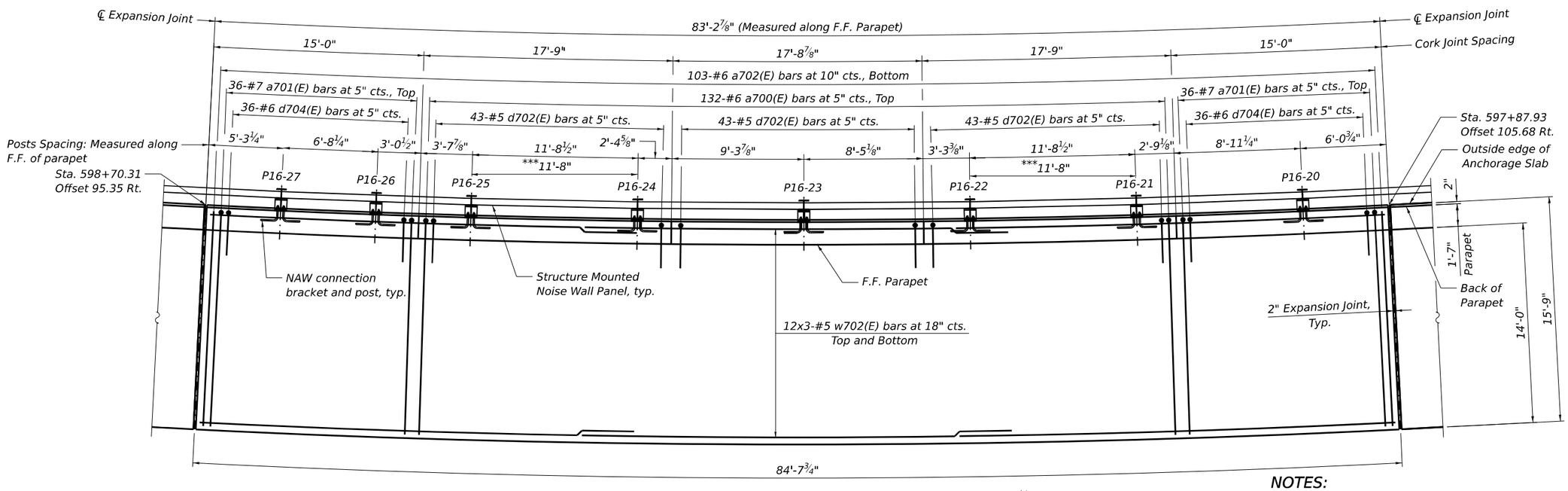

***Measured from ℄ to ℄ of Post

PLAN

(Segment 3)

N

NOTES:

1. Stations and offsets are measured along ℄ I-80 to outside edge of anchorage slab.
2. For Bar diagrams, Expansion, Construction, and Cork Joint Details, and Bill of Material, see Sheet S11-26.
3. For Noise Abatement Wall connection details, see Sheet S11-27.
4. Cost of 2" PJF is not paid for separately and shall be included with Concrete Superstructure.

MODEL: BL_PR_I80 - Plan 3 [Sheet]
FILE NAME: pw://transystems-pw.bentley.com:TRANSYSCORP-PW1-HOSTED/Documents/Projects_2018/CH401/401180022/02-TranSystems/CAD/62R89/Sheets/23-Structural/Moment Slabs/D16R89-SHT-MOMENTSLAB16-STRUCT-7

HBM ENGINEERING GROUP, LLC

USER NAME = Jana.Issa	DESIGNED - JMI	REVISED -	
	DRAWN - JMI	REVISED -	
PLOT SCALE =	CHECKED - SK, MAI	REVISED -	
PLOT DATE = 12/1/2023	DATE - 10/6/23	REVISED -	

STATE OF ILLINOIS
DEPARTMENT OF TRANSPORTATION

ANCHORAGE SLAB 16
ANCHORAGE SLAB PLAN AND ELEVATION 3

SCALE: | SHEET S11-7 OF S11-28 SHEETS | STA. | TO STA.

F.A.I. RTE.	SECTION	COUNTY	TOTAL SHEETS	SHEET NO.
I-80	FAI 80 22 BR	WILL	1201	818
		CONTRACT NO. 62R89		
	ILLINOIS	FED. AID PROJECT		

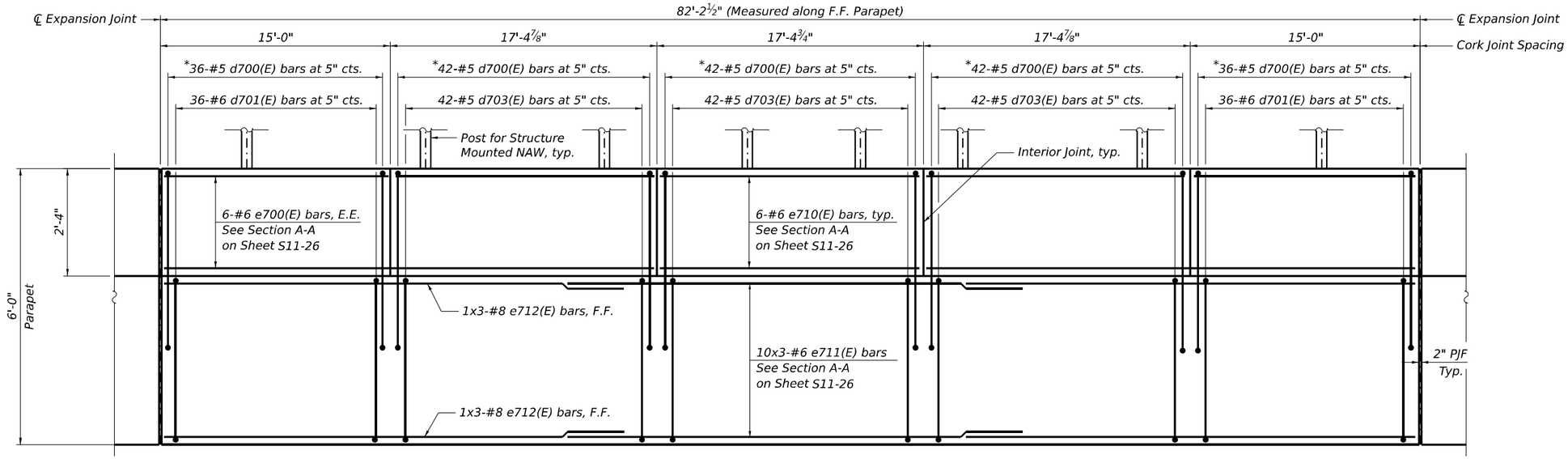

INSIDE ELEVATION OF PARAPET

(Segment 4)

* Tilt 7-d700(E) bars to fit at area of noise abatement anchor rod assembly locations.

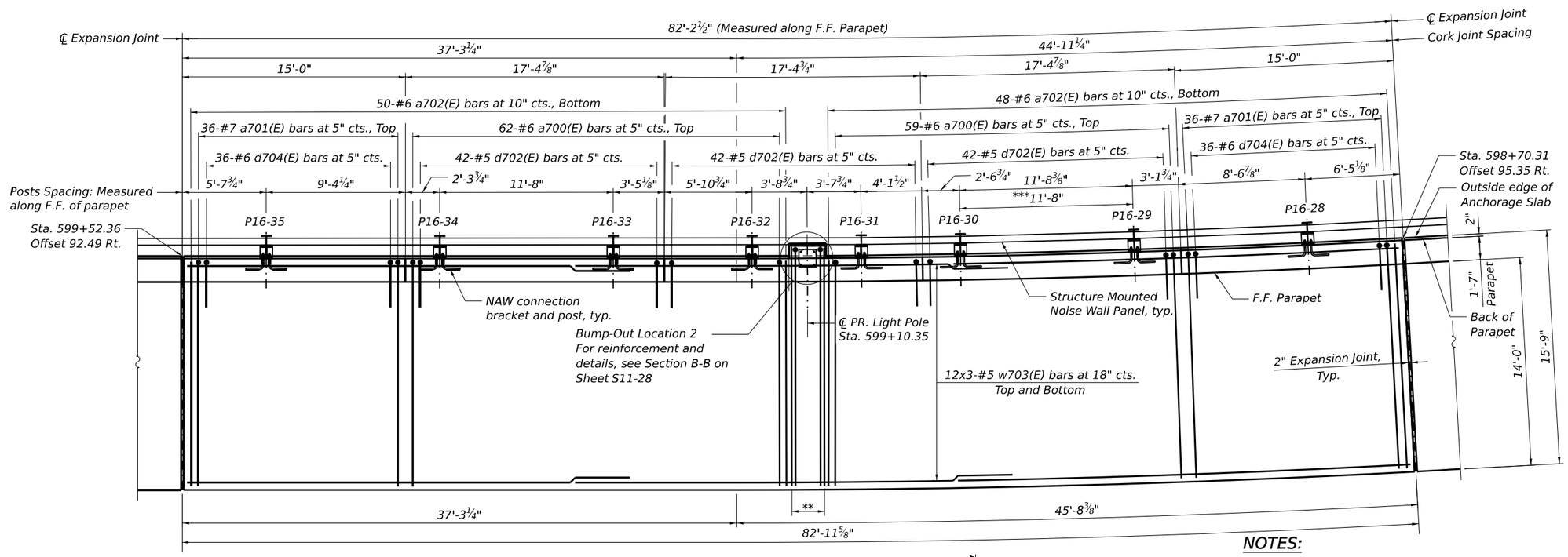

PLAN

(Segment 4)

**7-#6 a731(E) bars at 5" cts., Top
4-#6 a730(E) bars at 10" cts., Bottom

***Measured from ℄ to ℄ of Post

N

NOTES:

1. Stations and offsets are measured along ℄ I-80 to outside edge of anchorage slab.
2. For Bar diagrams, Expansion, Construction, and Cork Joint Details, and Bill of Material, see Sheet S11-26.
3. For Noise Abatement Wall connection details, see Sheet S11-27.
4. Cost of 2" PJF is not paid for separately and shall be included with Concrete Superstructure.

MODEL: BL_PR_I80 • Plan 3 [Sheet]
FILE NAME: pw://transystems-pw.bentley.com:TRANSYSCORP-PW1-HOSTED/Documents/Projects_2018/CH401/401180022/02-TranSystems/CAD/62R89/Sheets/23-Structural/Moment Slabs/D62R89-SHT-MOMENTSLAB16-STRUCT-8

HBM ENGINEERING GROUP, LLC

USER NAME = Jana.Issa	DESIGNED - JMI	REVISED -	
	DRAWN - JMI	REVISED -	
PLOT SCALE =	CHECKED - SK, MAI	REVISED -	
PLOT DATE = 12/1/2023	DATE - 10/6/23	REVISED -	

STATE OF ILLINOIS
DEPARTMENT OF TRANSPORTATION

ANCHORAGE SLAB 16
ANCHORAGE SLAB PLAN AND ELEVATION 4

SCALE: | SHEET S11-8 OF S11-28 SHEETS | STA. | TO STA.

F.A.I. RTE.	SECTION	COUNTY	TOTAL SHEETS	SHEET NO.
I-80	FAI 80 22 BR	WILL	1201	819
		CONTRACT NO. 62R89		
	ILLINOIS	FED. AID PROJECT		

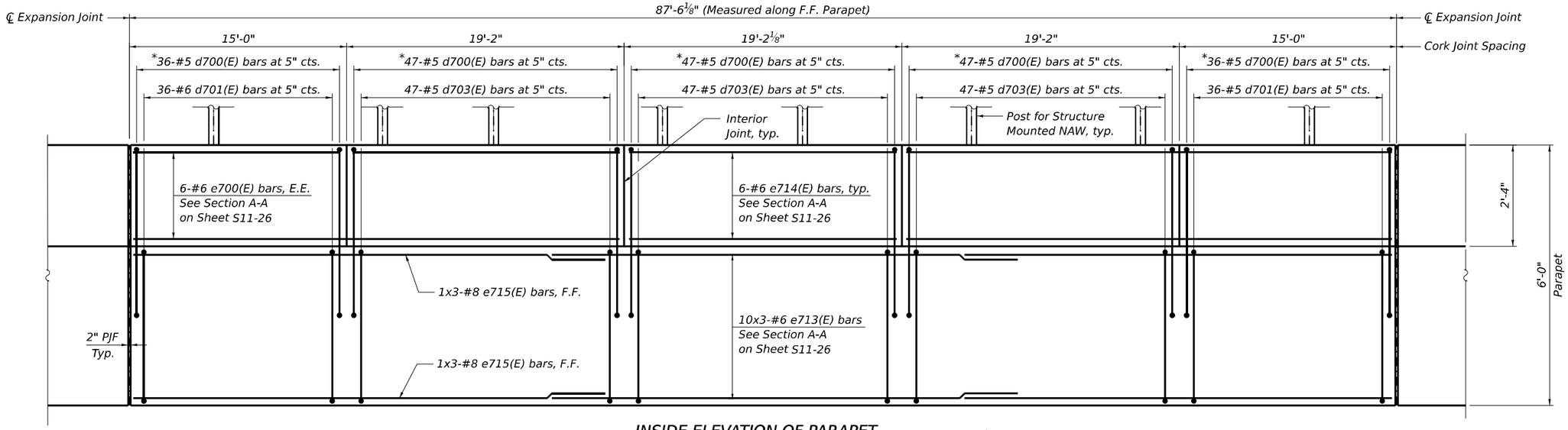

INSIDE ELEVATION OF PARAPET

(Segment 5)

* Tilt 7-d700(E) bars to fit at area of noise abatement anchor rod assembly locations.

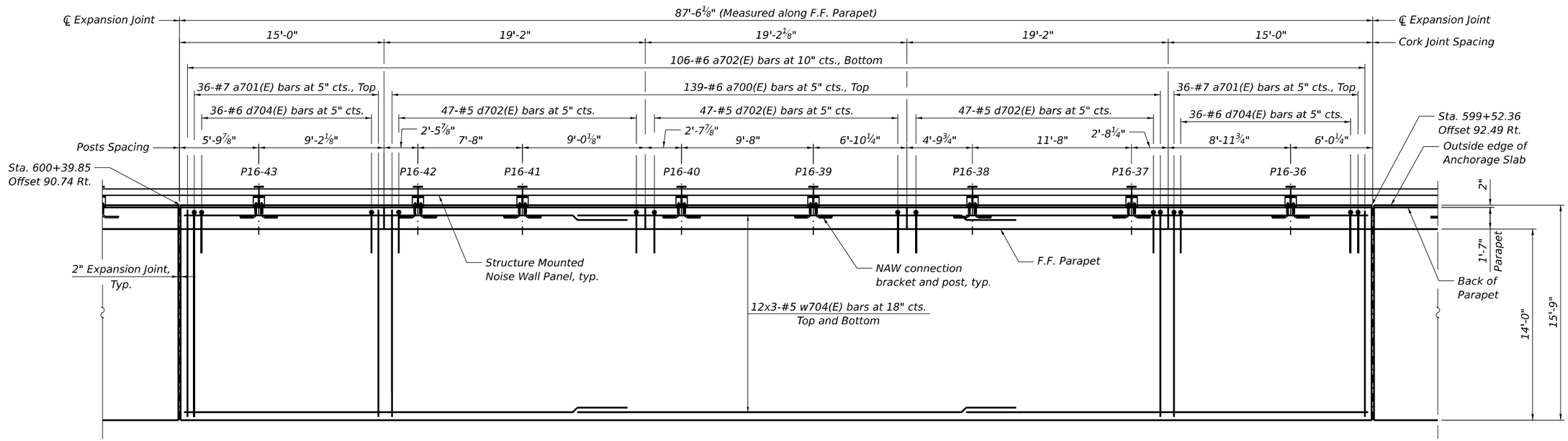

PLAN

(Segment 5)

N

NOTES:

1. Stations and offsets are measured along ℄ I-80 to outside edge of anchorage slab.
2. For Bar diagrams, Expansion, Construction, and Cork Joint Details, and Bill of Material, see Sheet S11-26.
3. For Noise Abatement Wall connection details, see Sheet S11-27.
4. Cost of 2" PJF is not paid for separately and shall be included with Concrete Superstructure.

MODEL: BL_PR_I80 - Plan 3 [Sheet]
FILE NAME: pw://transystems-pw.bentley.com:TRANSYSCORP-PW1-HOSTED/Documents/Projects_2018/CH401/40118002202-TranSystems/CAD/62R89/Sheets/23-Structural/Moment Slabs/D162R89-SHT-MOMENTSLAB16-STRUCT-9

HBM ENGINEERING GROUP, LLC	USER NAME = jana.issa	DESIGNED - JMI	REVISED -	STATE OF ILLINOIS DEPARTMENT OF TRANSPORTATION	ANCHORAGE SLAB 16 ANCHORAGE SLAB PLAN AND ELEVATION 5	F.A.I. RTE.	SECTION	COUNTY	TOTAL SHEETS / SHEET NO.
		DRAWN - JMI	REVISED -			I-80	FAI 80 22 BR	WILL	1201 / 820
	PLOT SCALE =	CHECKED - SK, MAI	REVISED -					CONTRACT NO. 62R89	
	PLOT DATE = 12/1/2023	DATE - 10/6/23	REVISED -		SCALE: SHEET S11-9 OF S11-28 SHEETS STA. TO STA.		ILLINOIS	FED. AID PROJECT	

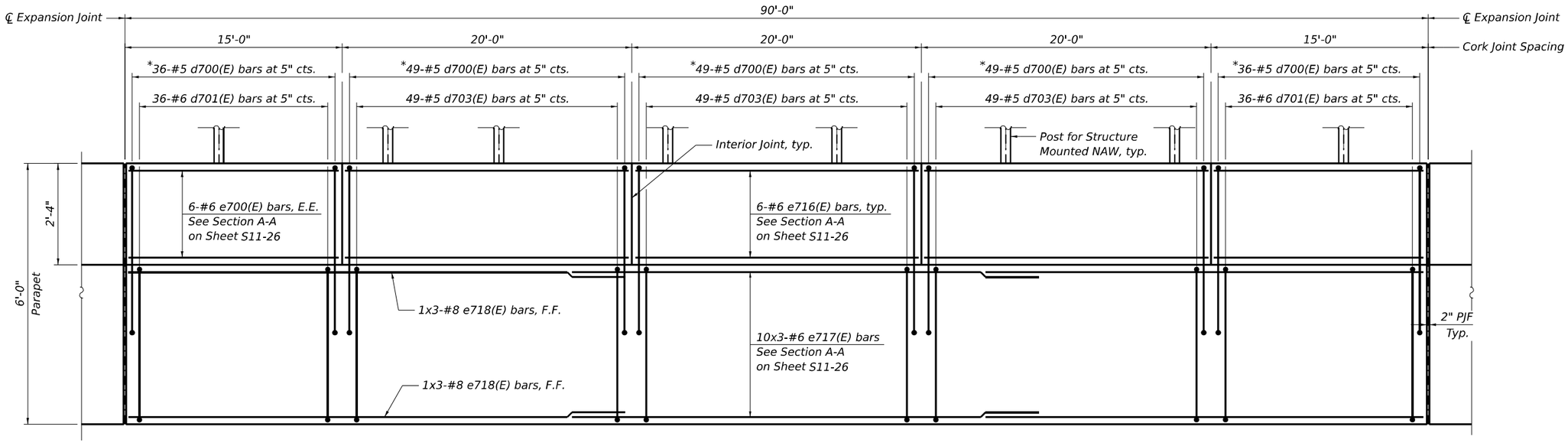

INSIDE ELEVATION OF PARAPET

(Segment 6)

* Tilt 7-d700(E) bars to fit at area of noise abatement anchor rod assembly locations.

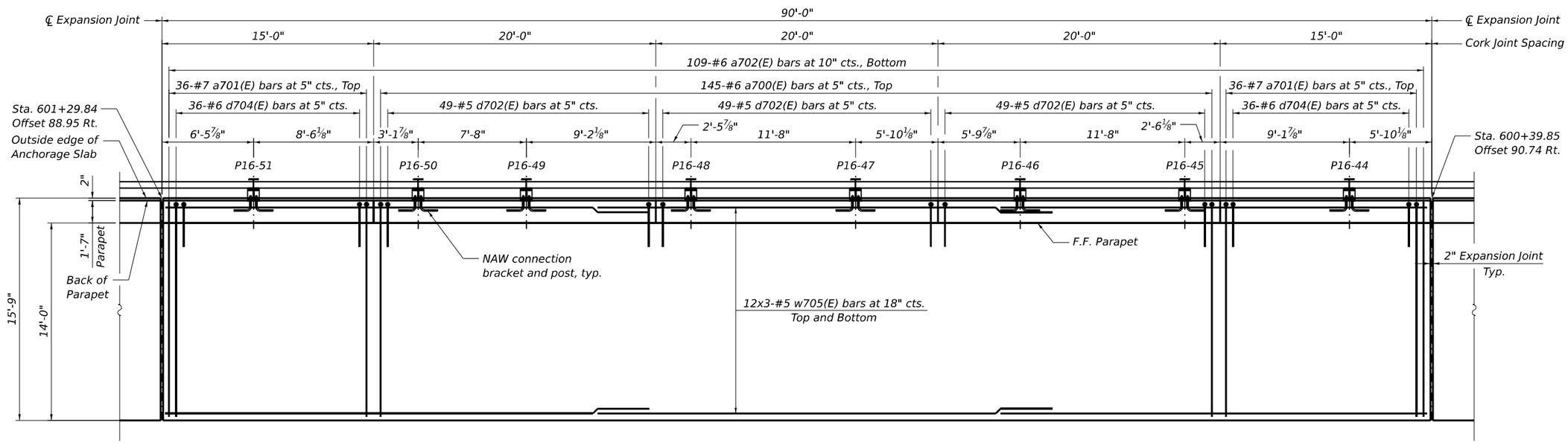

PLAN

(Segment 6)

N

NOTES:

1. Stations and offsets are measured along ℄ I-80 to outside edge of anchorage slab.
2. For Bar diagrams, Expansion, Construction, and Cork Joint Details, and Bill of Material, see Sheet S11-26.
3. For Noise Abatement Wall connection details, see Sheet S11-27.
4. Cost of 2" PJF is not paid for separately and shall be included with Concrete Superstructure.

MODEL: BL_PL_I80 • Plan 3 [Sheet]
FILE NAME: pw://transystems-pw.bentley.com:TRANSYSCORP-PW1-HOSTED/Documents/Projects_2018/CH401/40118002202-TranSystems/CAD/62R89/Sheets/23-Structural/Moment Slabs/D162R89-SHT-MOMENTSLAB16-STRUCT-10

HBM ENGINEERING GROUP, LLC

USER NAME = Jana.Issa	DESIGNED - JMI	REVISED -	
	DRAWN - JMI	REVISED -	
PLOT SCALE =	CHECKED - SK, MAI	REVISED -	
PLOT DATE = 12/1/2023	DATE - 10/6/23	REVISED -	

STATE OF ILLINOIS
DEPARTMENT OF TRANSPORTATION

ANCHORAGE SLAB 16
ANCHORAGE SLAB PLAN AND ELEVATION 6

SCALE: | SHEET S11-10 OF S11-28 SHEETS | STA. | TO STA.

F.A.I. RTE.	SECTION	COUNTY	TOTAL SHEETS	SHEET NO.
I-80	FAI 80 22 BR	WILL	1201	821
		CONTRACT NO. 62R89		
	ILLINOIS	FED. AID PROJECT		

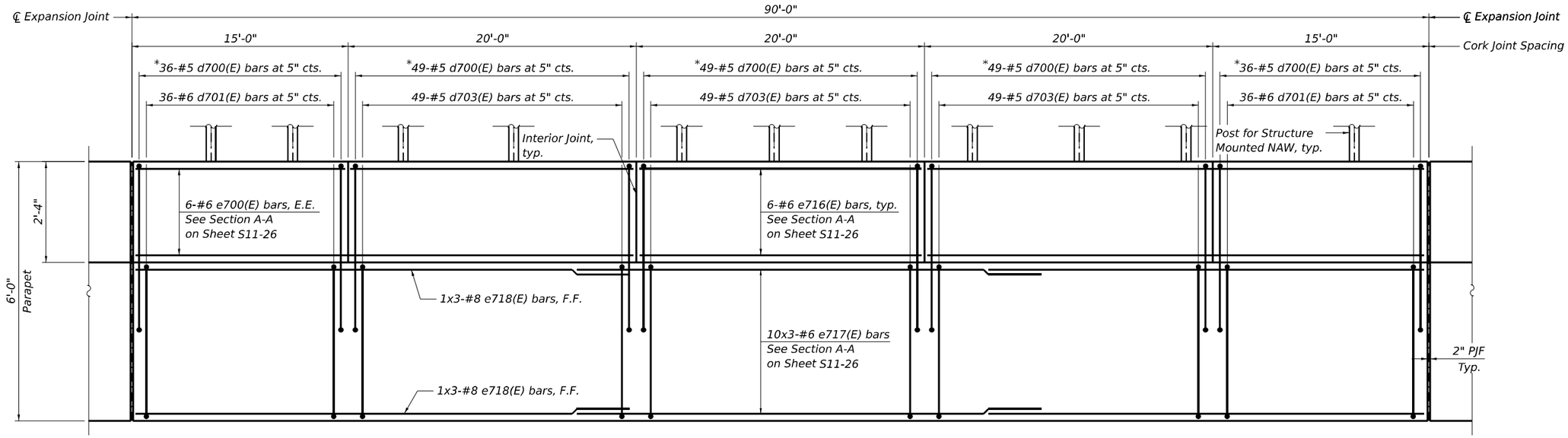

INSIDE ELEVATION OF PARAPET

(Segment 7)

* Tilt 7-d700(E) bars to fit at area of noise abatement anchor rod assembly locations.

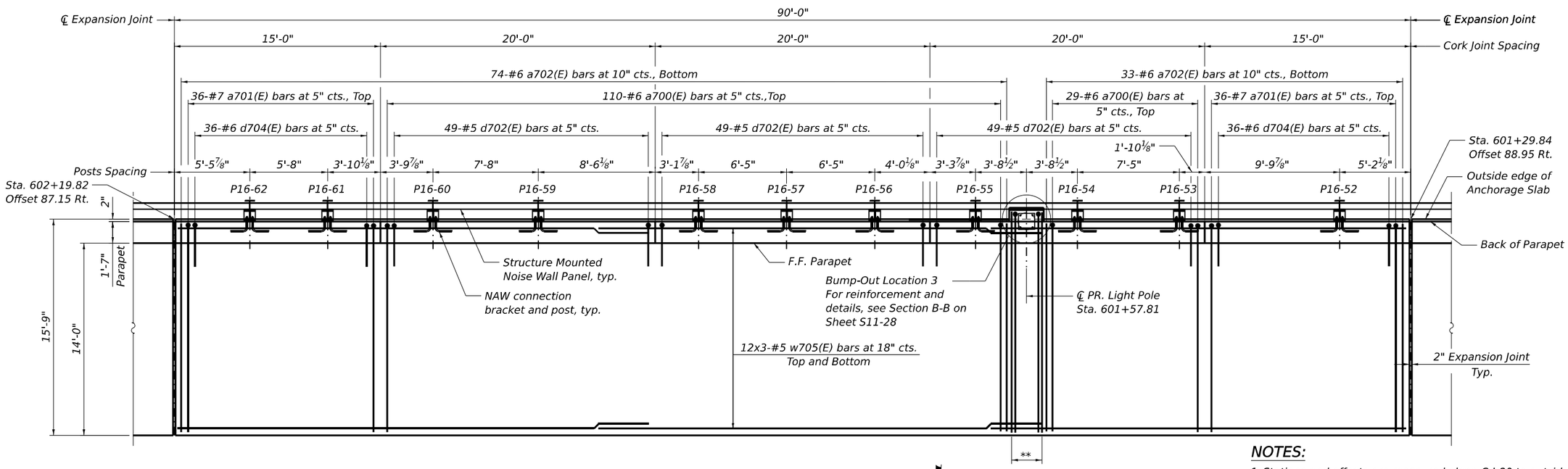

PLAN

(Segment 7)

**7-#6 a731(E) bars at 5" cts., Top
4-#6 a730(E) bars at 10" cts., Bottom

N

NOTES:

1. Stations and offsets are measured along ℄ I-80 to outside edge of anchorage slab.
2. For Bar diagrams, Expansion, Construction, and Cork Joint Details, and Bill of Material, see Sheet S11-26.
3. For Noise Abatement Wall connection details, see Sheet S11-27.
4. Cost of 2" PJF is not paid for separately and shall be included with Concrete Superstructure.

MODEL: BL_PR_I80 - Plan 3 [Sheet]
FILE NAME: pw://transystems-pw.bentley.com:TRANSYSCORP-PW1-HOSTED/Documents/Projects_2018/CH401/401180022/02-TranSystems/CAD/62R89/Sheets/23-Structural/Moment Slabs/D162R89-SHT-MOMENTSLAB16-STRUCT-11

HBM ENGINEERING GROUP, LLC

USER NAME = Jana.Issa	DESIGNED - JMI	REVISED -	
	DRAWN - JMI	REVISED -	
PLOT SCALE =	CHECKED - SK, MAI	REVISED -	
PLOT DATE = 12/1/2023	DATE - 10/6/23	REVISED -	

STATE OF ILLINOIS
DEPARTMENT OF TRANSPORTATION

ANCHORAGE SLAB 16
ANCHORAGE SLAB PLAN AND ELEVATION 7

SCALE: | SHEET S11-11 OF S11-28 SHEETS | STA. | TO STA.

F.A.I. RTE.	SECTION	COUNTY	TOTAL SHEETS	SHEET NO.
I-80	FAI 80 22 BR	WILL	1201	822
		CONTRACT NO. 62R89		
	ILLINOIS	FED. AID PROJECT		

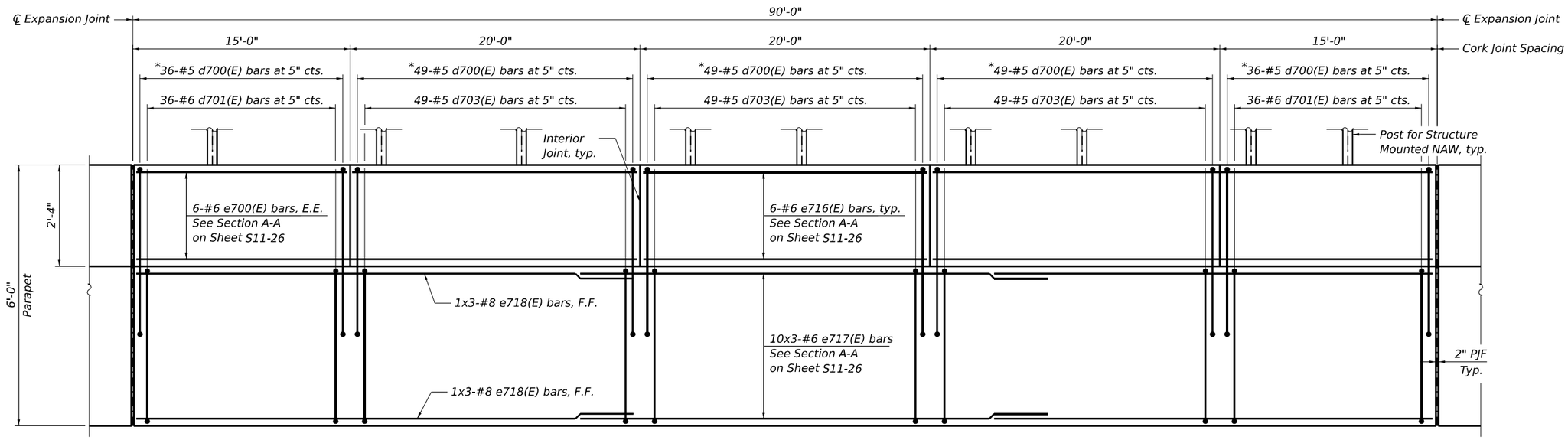

INSIDE ELEVATION OF PARAPET

(Segment 8)

* Tilt 7-d700(E) bars to fit at area of noise abatement anchor rod assembly locations.

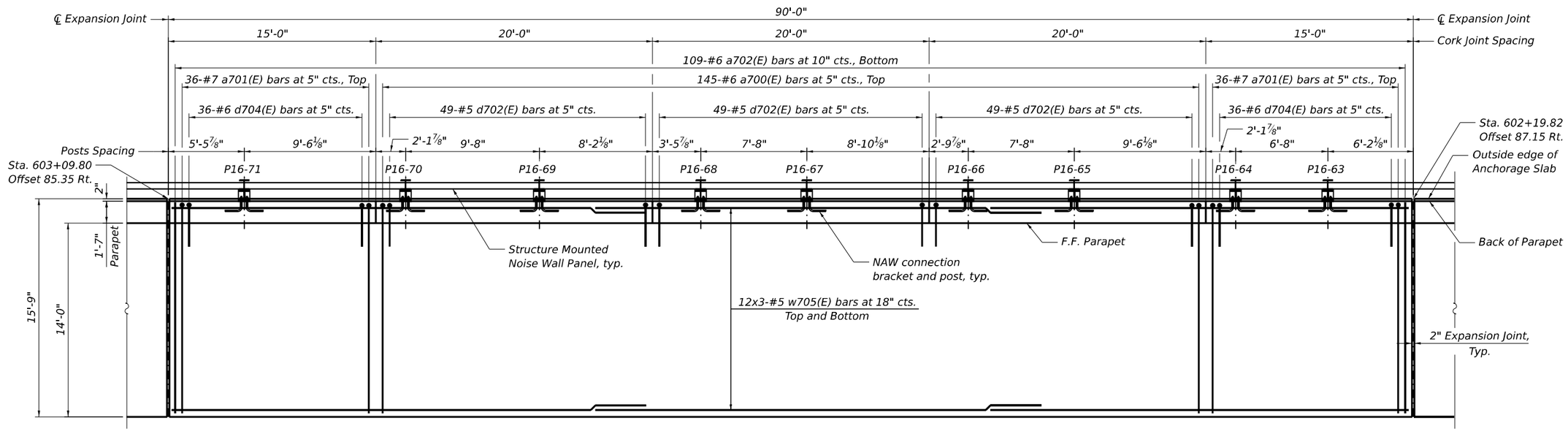

PLAN

(Segment 8)

N

NOTES:

1. Stations and offsets are measured along ℄ I-80 to outside edge of anchorage slab.
2. For Bar diagrams, Expansion, Construction, and Cork Joint Details, and Bill of Material, see Sheet S11-26.
3. For Noise Abatement Wall connection details, see Sheet S11-27.
4. Cost of 2" PJF is not paid for separately and shall be included with Concrete Superstructure.

MODEL: BL_PR_I80 • Plan 3 [Sheet]
FILE NAME: pw://transystems-pw.bentley.com:TRANSYSCORP-PW1-HOSTED/Documents/Projects_2018/CH401/401180022/02-TranSystems/CAD/62R89/Sheets/23-Structural/Moment Slabs/D162R89-SHT-MOMENTSLAB16-STRUCT-12

HBM ENGINEERING GROUP, LLC	USER NAME = jana.issa	DESIGNED - JMI	REVISED -	STATE OF ILLINOIS DEPARTMENT OF TRANSPORTATION	ANCHORAGE SLAB 16	F.A.I. RTE.	SECTION	COUNTY	TOTAL SHEETS	SHEET NO.
		DRAWN - JMI	REVISED -		ANCHORAGE SLAB PLAN AND ELEVATION 8	I-80	FAI 80 22 BR	WILL	1201	823
	PLOT SCALE =	CHECKED - SK, MAI	REVISED -					CONTRACT NO. 62R89		
	PLOT DATE = 12/1/2023	DATE - 10/6/23	REVISED -		SCALE: SHEET S11-12 OF S11-28 SHEETS STA. TO STA.		ILLINOIS	FED. AID PROJECT		

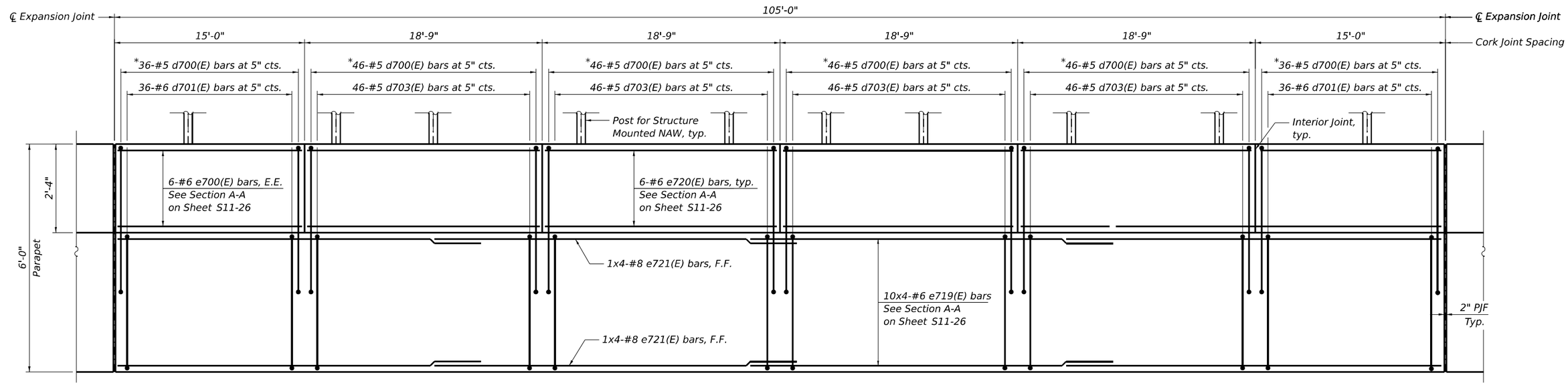

INSIDE ELEVATION OF PARAPET

(Segment 9)

* Tilt 7-d700(E) bars to fit at area of noise abatement anchor rod assembly locations.

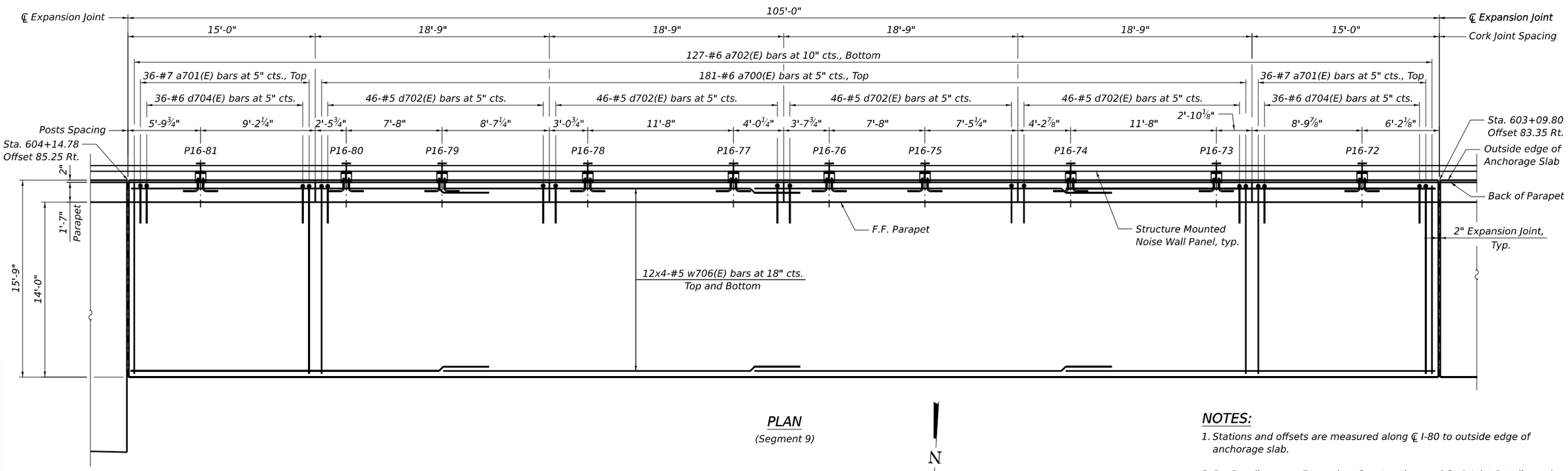

PLAN

(Segment 9)

N

NOTES:

1. Stations and offsets are measured along ℄ I-80 to outside edge of anchorage slab.
2. For Bar diagrams, Expansion, Construction, and Cork Joint Details, and Bill of Material, see Sheet S11-26.
3. For Noise Abatement Wall connection details, see Sheet S11-27.
4. Cost of 2" PJF is not paid for separately and shall be included with Concrete Superstructure.

MODEL: BL_PL_I80 • Plan 3 [Sheet]
FILE NAME: pw://transystems-pw.bentley.com:TRANSYSCORP-PW1-HOSTED/Documents/Projects_2018/CH401/401180022/02-TranSystems/CAD/62R89/Sheets/23-Structural/Moment Slabs/D162R89-SHT-MOMENTSLAB16-STRUCT-L3

HBM ENGINEERING GROUP, LLC

USER NAME = Jana.Issa	DESIGNED - JMI	REVISED -	
	DRAWN - JMI	REVISED -	
PLOT SCALE =	CHECKED - SK, MAI	REVISED -	
PLOT DATE = 12/1/2023	DATE - 10/6/23	REVISED -	

STATE OF ILLINOIS
DEPARTMENT OF TRANSPORTATION

ANCHORAGE SLAB 16
ANCHORAGE SLAB PLAN AND ELEVATION 9

SCALE: | SHEET S11-13 OF S11-28 SHEETS | STA. | TO STA.

F.A.I. RTE.	SECTION	COUNTY	TOTAL SHEETS	SHEET NO.
I-80	FAI 80 22 BR	WILL	1201	824
		CONTRACT NO. 62R89		
	ILLINOIS	FED. AID PROJECT		

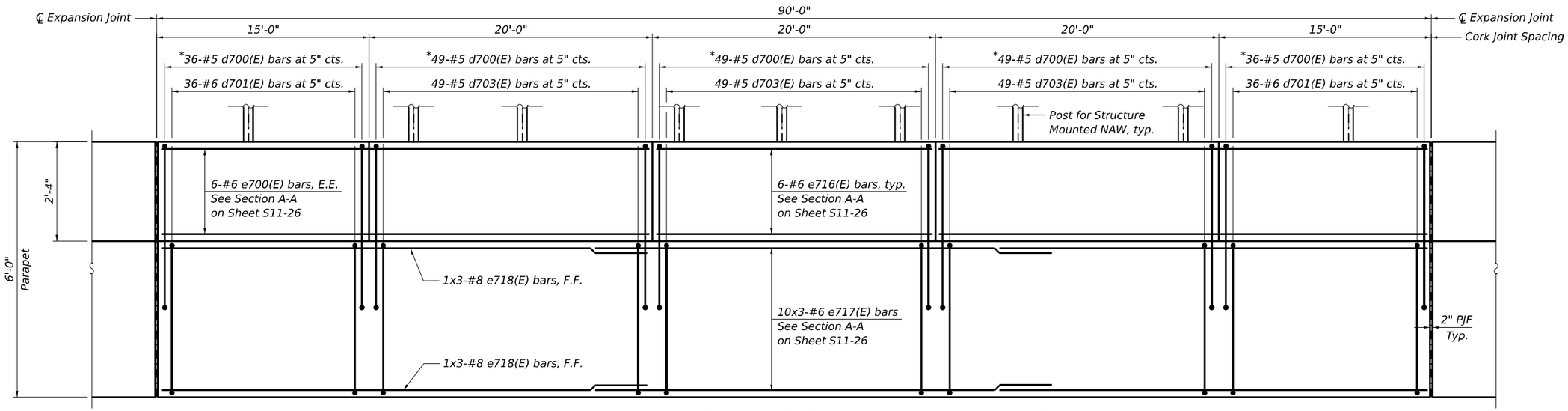

INSIDE ELEVATION OF PARAPET

(Segment 10)

* Tilt 7-d700(E) bars to fit at area of noise abatement anchor rod assembly locations.

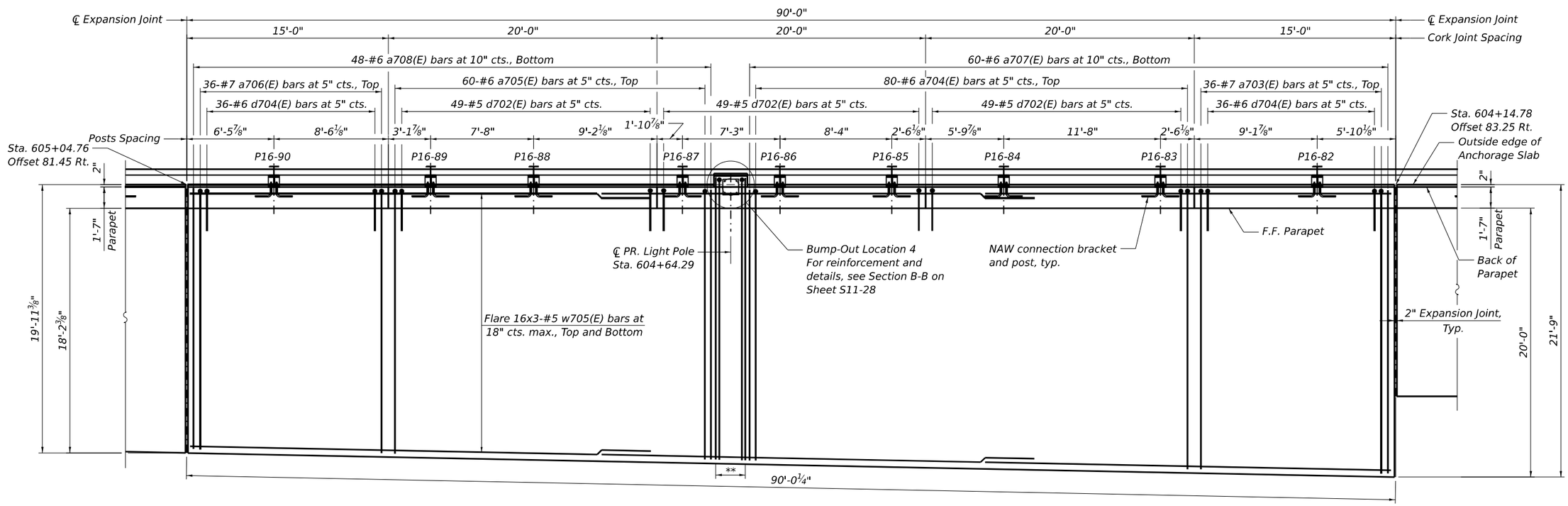

** 7-#6 a732(E) bars at 5" cts., Top
4-#6 a733(E) bars at 10" cts., Bottom

PLAN

(Segment 10)

N

NOTES:

1. Stations and offsets are measured along ℄ I-80 to outside edge of anchorage slab.
2. For Bar diagrams, Expansion, Construction, and Cork Joint Details, and Bill of Material, see Sheet S11-26.
3. For Noise Abatement Wall connection details, see Sheet S11-27.
4. Cost of 2" PJF is not paid for separately and shall be included with Concrete Superstructure.

MODEL: BL_PR_I80 - Plan 3 [Sheet]
FILE NAME: pw:\\transystems-pw.bentley.com:TRANSYSCORP-PW1-HOSTED\Documents\Projects_2018\CH401\401180022\02-TranSystems\CAD\62R89\Sheets\23-Structural\Moment Slabs\D62R89-SHT-MOMENTSLAB16-STRUCT-14

HBM ENGINEERING GROUP, LLC

USER NAME = Jana.Issa	DESIGNED - JMI	REVISED -	
	DRAWN - JMI	REVISED -	
PLOT SCALE =	CHECKED - SK, MAI	REVISED -	
PLOT DATE = 12/1/2023	DATE - 10/6/23	REVISED -	

STATE OF ILLINOIS
DEPARTMENT OF TRANSPORTATION

ANCHORAGE SLAB 16
ANCHORAGE SLAB PLAN AND ELEVATION 10

SCALE: | SHEET S11-14 OF S11-28 SHEETS | STA. | TO STA.

F.A.I. RTE.	SECTION	COUNTY	TOTAL SHEETS	SHEET NO.
I-80	FAI 80 22 BR	WILL	1201	825
		CONTRACT NO. 62R89		
	ILLINOIS	FED. AID PROJECT		

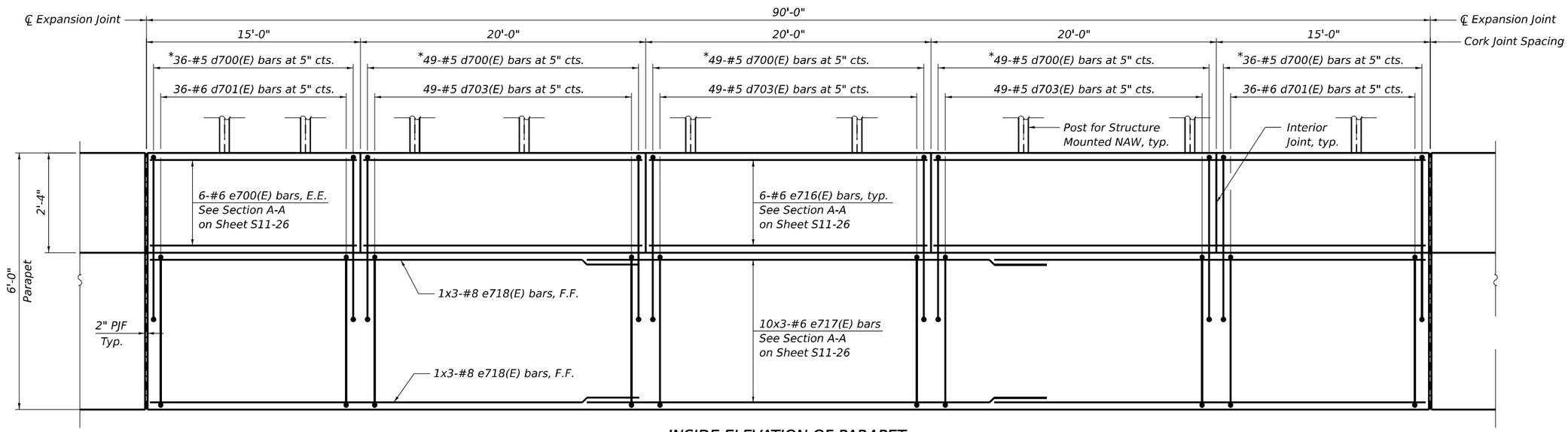

INSIDE ELEVATION OF PARAPET

(Segment 11)

*Tilt 7-d700(E) bars to fit at area of noise abatement anchor rod assembly locations.

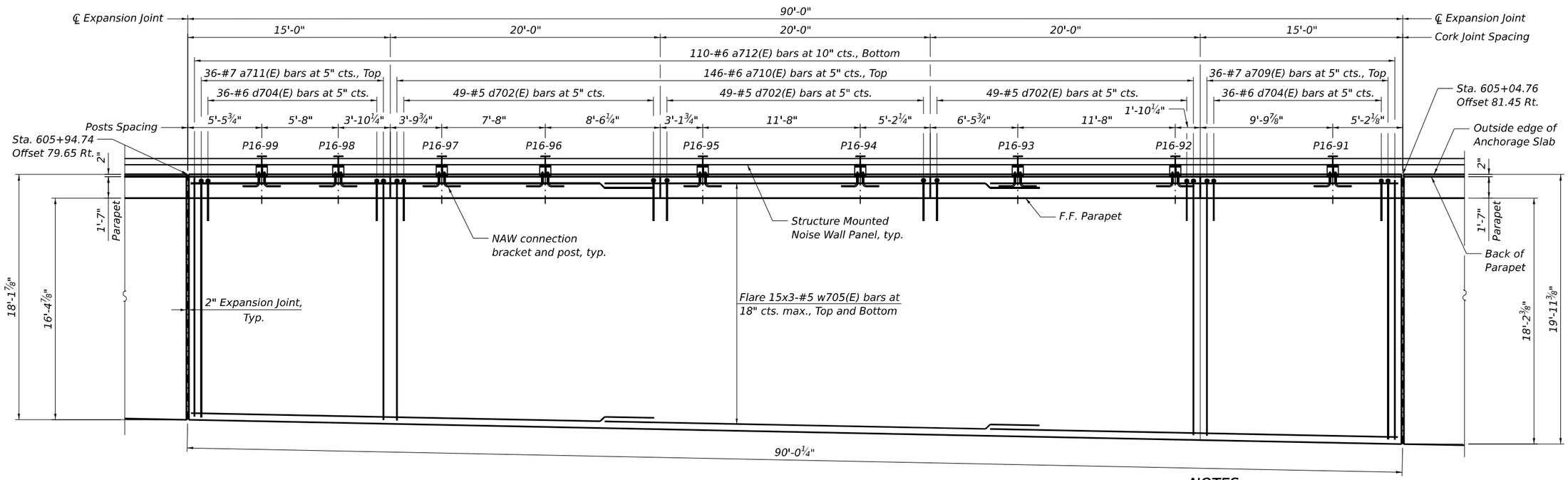

PLAN

(Segment 11)

N

NOTES:

1. Stations and offsets are measured along ℄ I-80 to outside edge of anchorage slab.
2. For Bar diagrams, Expansion, Construction, and Cork Joint Details, and Bill of Material, see Sheet S11-26.
3. For Noise Abatement Wall connection details, see Sheet S11-27.
4. Cost of 2" PJF is not paid for separately and shall be included with Concrete Superstructure.

MODEL: BL_PR_I80 - Plan 3 [Sheet]
FILE NAME: pw://transystems-pw.bentley.com:TRANSYSCORP-PW1-HOSTED/Documents/Projects_2018/CH401140118002202-TranSystems/CAD\62R89\Sheets\23-Structural\Moment Slabs\D162R89-SHT-MOMENTSLAB16-STRUCT-15

HBM ENGINEERING GROUP, LLC	USER NAME = jana.issa	DESIGNED - JMI	REVISED -	STATE OF ILLINOIS DEPARTMENT OF TRANSPORTATION	ANCHORAGE SLAB 16 ANCHORAGE SLAB PLAN AND ELEVATION 11	F.A.I. RTE.	SECTION	COUNTY	TOTAL SHEETS	SHEET NO.
		DRAWN - JMI	REVISED -			I-80	FAI 80 22 BR	WILL	1201	826
	PLOT SCALE =	CHECKED - SK, MAI	REVISED -					CONTRACT NO. 62R89		
	PLOT DATE = 12/1/2023	DATE - 10/6/23	REVISED -		SCALE: SHEET S11-15 OF S11-28 SHEETS STA. TO STA.		ILLINOIS	FED. AID PROJECT		

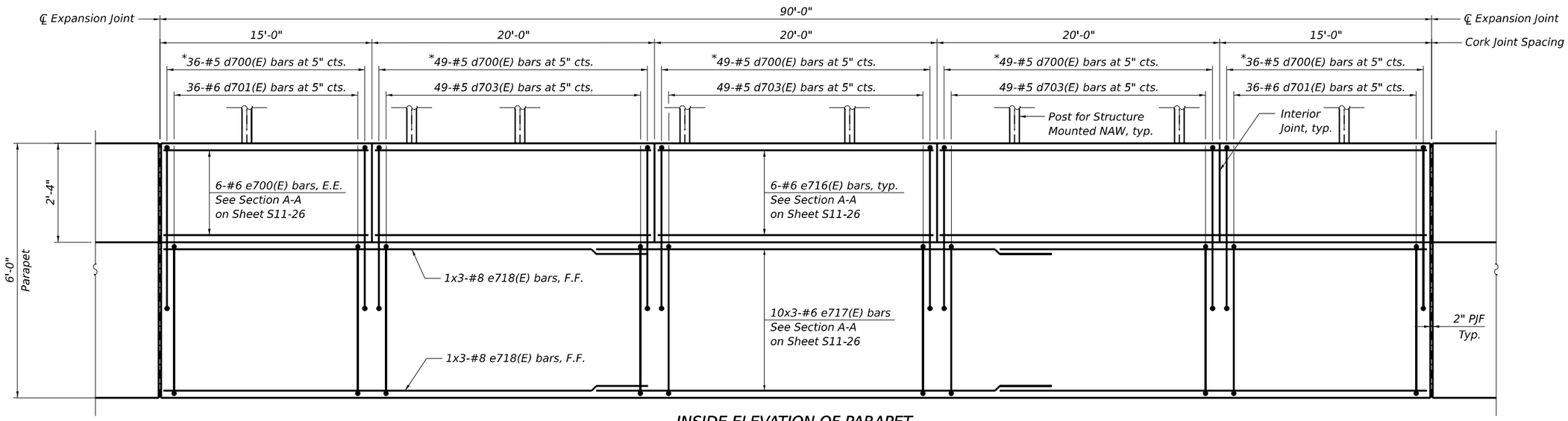

INSIDE ELEVATION OF PARAPET

(Segment 12)

* Tilt 7-d700(E) bars to fit at area of noise abatement anchor rod assembly locations.

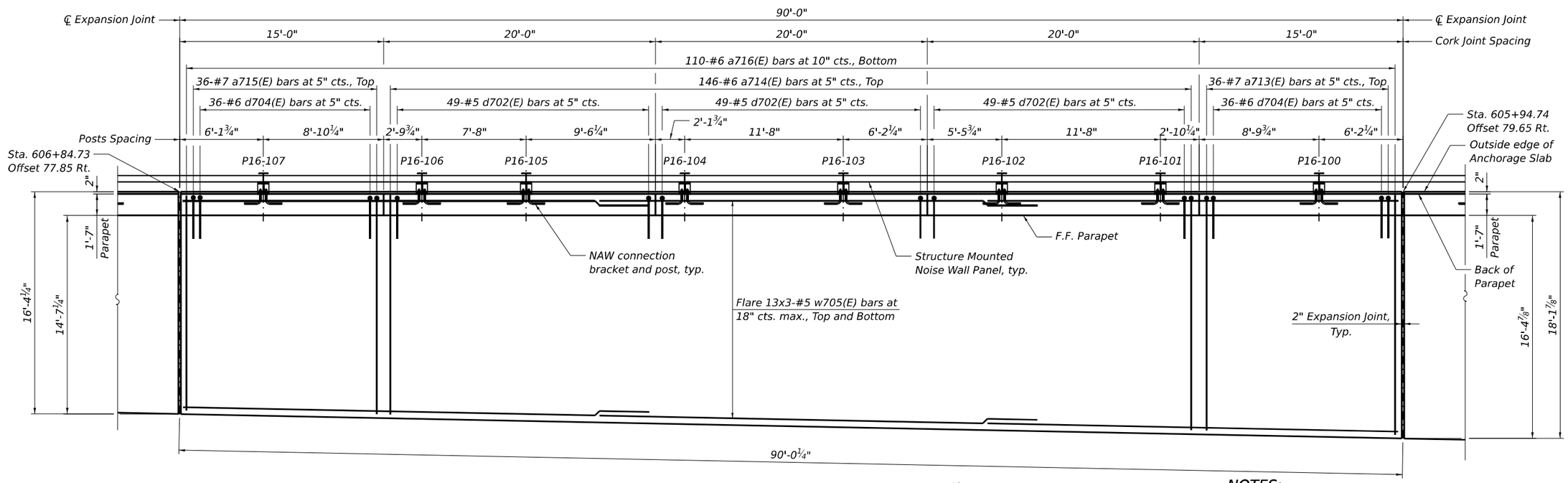

PLAN

(Segment 12)

N

NOTES:

1. Stations and offsets are measured along ℄ I-80 to outside edge of anchorage slab.
2. For Bar diagrams, Expansion, Construction, and Cork Joint Details, and Bill of Material, see Sheet S11-26.
3. For Noise Abatement Wall connection details, see Sheet S11-27.
4. Cost of 2" PJF is not paid for separately and shall be included with Concrete Superstructure.

MODEL: BL_PR_I80 - Plan 3 [Sheet]
FILE NAME: pw://transystems-pw.bentley.com:TRANSYSCORP-PW1-HOSTED/Documents/Projects_2018/CH401/401180022/02-TranSystems/CAD/62R89/Sheets/23-Structural/Moment Slabs/D162R89-SHT-MOMENTSLAB16-STRUCT-16

HBM ENGINEERING GROUP, LLC

USER NAME = Jana.Issa	DESIGNED - JMI	REVISED -	
	DRAWN - JMI	REVISED -	
PLOT SCALE =	CHECKED - SK, MAI	REVISED -	
PLOT DATE = 12/1/2023	DATE - 10/6/23	REVISED -	

STATE OF ILLINOIS
DEPARTMENT OF TRANSPORTATION

ANCHORAGE SLAB 16
ANCHORAGE SLAB PLAN AND ELEVATION 12

SCALE: | SHEET S11-16 OF S11-28 SHEETS | STA. | TO STA.

F.A.I. RTE.	SECTION	COUNTY	TOTAL SHEETS	SHEET NO.
I-80	FAI 80 22 BR	WILL	1201	827
		CONTRACT NO. 62R89		
	ILLINOIS	FED. AID PROJECT		

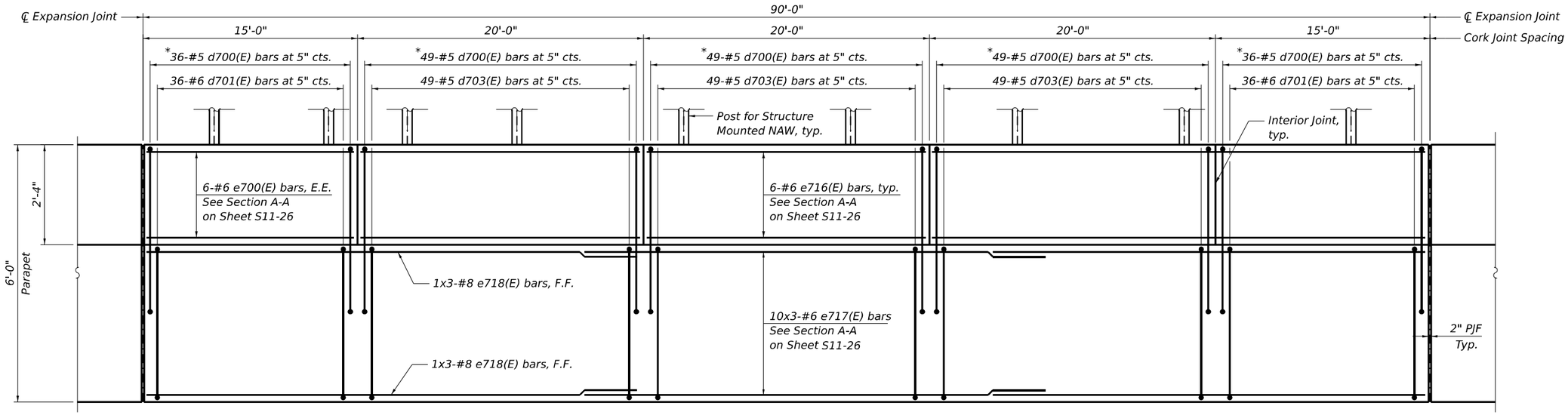

INSIDE ELEVATION OF PARAPET

(Segment 13)

* Tilt 7-d700(E) bars to fit at area of noise abatement anchor rod assembly locations.

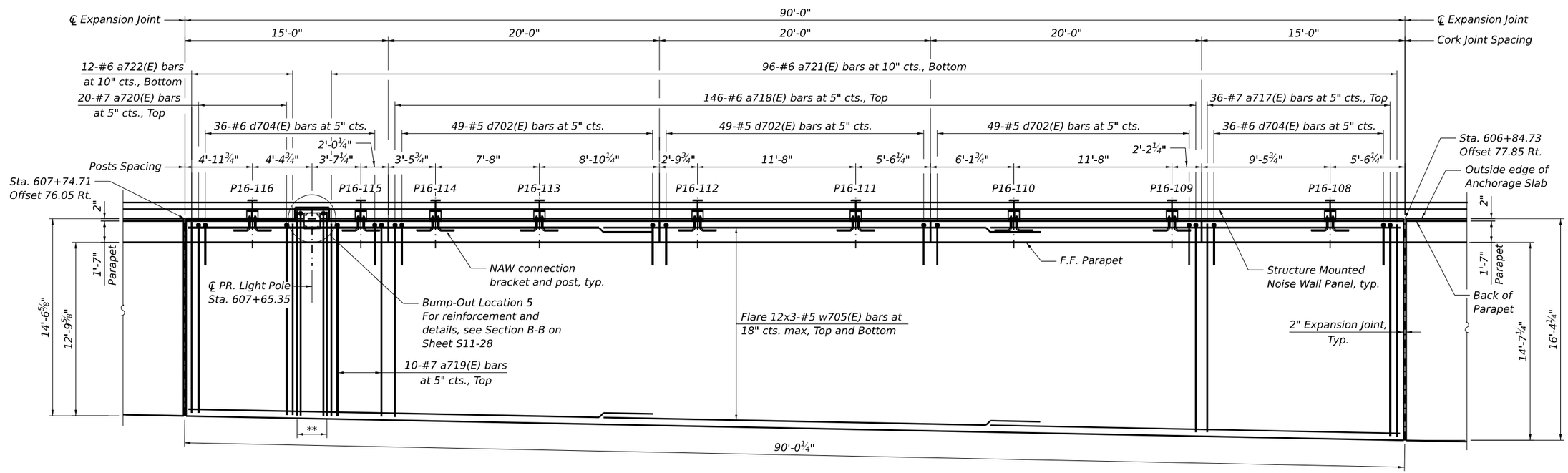

PLAN

(Segment 13)

** 7-#7 a734(E) bars at 5" cts., Top
4-#6 a735(E) bars at 10" cts., Bottom

N

NOTES:

1. Stations and offsets are measured along ℄ I-80 to outside edge of anchorage slab.
2. For Bar diagrams, Expansion, Construction, and Cork Joint Details, and Bill of Material, see Sheet S11-26.
3. For Noise Abatement Wall connection details, see Sheet S11-27.
4. Cost of 2" PJF is not paid for separately and shall be included with Concrete Superstructure.

MODEL: BL_PR_I80 - Plan 3 [Sheet]
FILE NAME: pw://transystems-pw.bentley.com:TRANSYSCORP-PW1-HOSTED/Documents/Projects_2018/CH401/401180022/02-TranSystems/CAD/62R89/Sheets/23-Structural/Moment Slabs/D16R89-SHT-MOMENTSLAB16-STRUCT-17

HBM ENGINEERING GROUP, LLC	USER NAME = jana.issa	DESIGNED - JMI	REVISED -	STATE OF ILLINOIS DEPARTMENT OF TRANSPORTATION	ANCHORAGE SLAB 16 ANCHORAGE SLAB PLAN AND ELEVATION 13	F.A.I. RTE.	SECTION	COUNTY	TOTAL SHEETS	SHEET NO.
		DRAWN - JMI	REVISED -			I-80	FAI 80 22 BR	WILL	1201	828
	PLOT SCALE =	CHECKED - SK, MAI	REVISED -					CONTRACT NO. 62R89		
	PLOT DATE = 12/1/2023	DATE - 10/6/23	REVISED -		SCALE: SHEET S11-17 OF S11-28 SHEETS STA. TO STA.		ILLINOIS	FED. AID PROJECT		

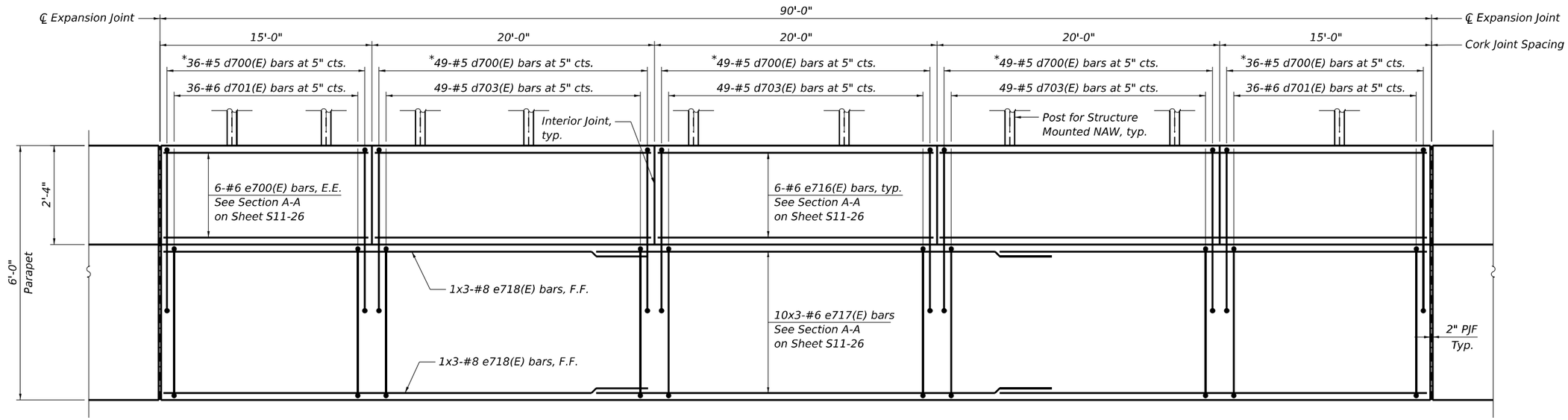

INSIDE ELEVATION OF PARAPET

(Segment 14)

* Tilt 7-d700(E) bars to fit at area of noise abatement anchor rod assembly locations.

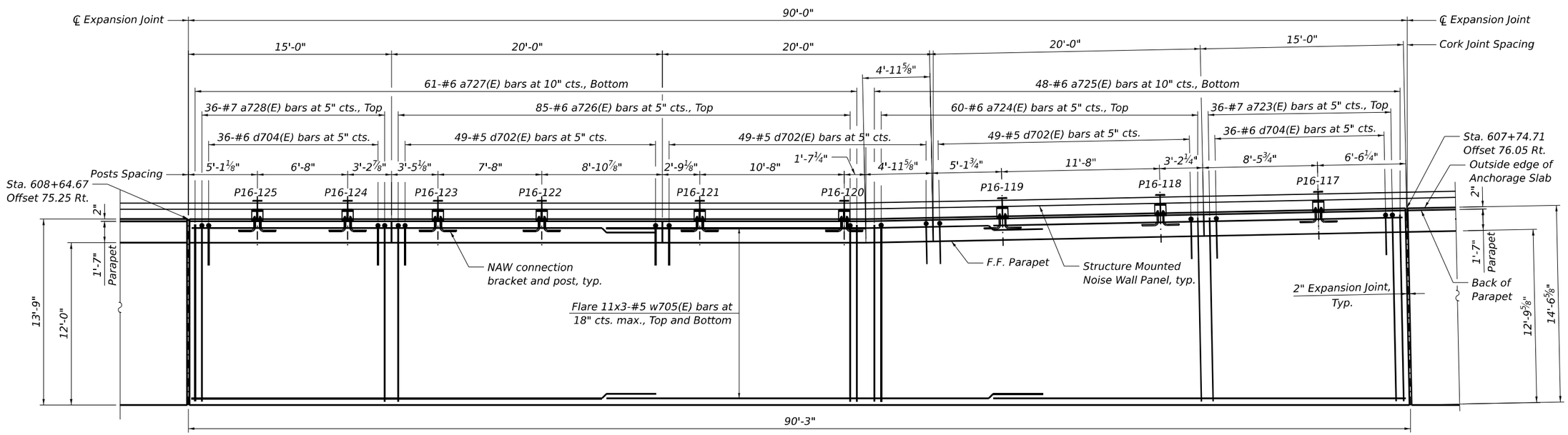

PLAN

(Segment 14)

N

NOTES:

1. Stations and offsets are measured along ℄ I-80 to outside edge of anchorage slab.
2. For Bar diagrams, Expansion, Construction, and Cork Joint Details, and Bill of Material, see Sheet S11-26.
3. For Noise Abatement Wall connection details, see Sheet S11-27.
4. Cost of 2" PJF is not paid for separately and shall be included with Concrete Superstructure.

MODEL: BL_PR_I80 • Plan 3 [Sheet]
FILE NAME: pw://transystems-pw.bentley.com:TRANSYSCORP-PW1-HOSTED/Documents/Projects_2018/CH401/401180022202-TranSystems/CAD/62R89/Sheets/23-Structural/Moment Slabs/D162R89-SHT-MOMENTSLAB16-STRUCT-18

HBM ENGINEERING GROUP, LLC

USER NAME = Jana.Issa	DESIGNED - JMI	REVISED -	
	DRAWN - JMI	REVISED -	
PLOT SCALE =	CHECKED - SK, MAI	REVISED -	
PLOT DATE = 12/1/2023	DATE - 10/6/23	REVISED -	

STATE OF ILLINOIS
DEPARTMENT OF TRANSPORTATION

ANCHORAGE SLAB 16
ANCHORAGE SLAB PLAN AND ELEVATION 14

SCALE: | SHEET S11-18 OF S11-28 SHEETS | STA. | TO STA.

F.A.I. RTE.	SECTION	COUNTY	TOTAL SHEETS	SHEET NO.
I-80	FAI 80 22 BR	WILL	1201	829
		CONTRACT NO. 62R89		
	ILLINOIS	FED. AID PROJECT		

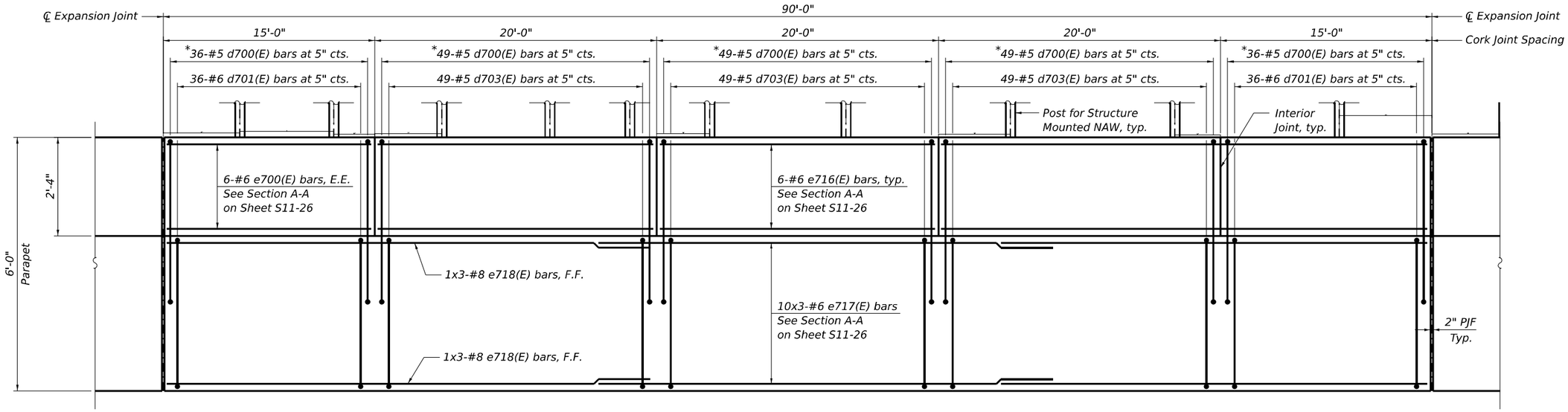

INSIDE ELEVATION OF PARAPET

(Segment 15)

* Tilt 7-d700(E) bars to fit at area of noise abatement anchor rod assembly locations.

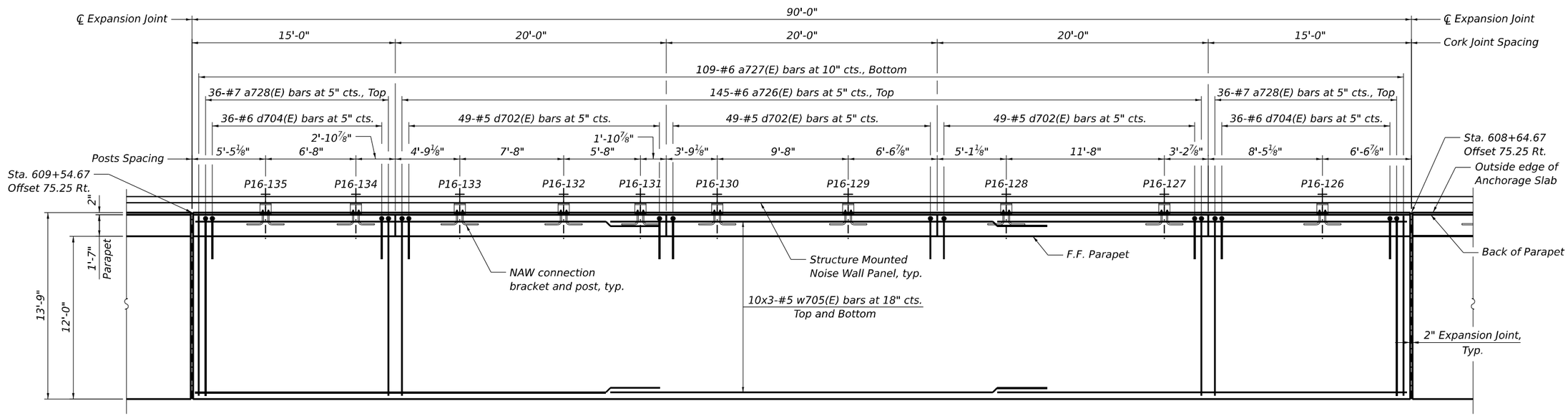

PLAN

(Segment 15)

N

NOTES:

1. Stations and offsets are measured along ℄ I-80 to outside edge of anchorage slab.
2. For Bar diagrams, Expansion, Construction, and Cork Joint Details, and Bill of Material, see Sheet S11-26.
3. For Noise Abatement Wall connection details, see Sheet S11-27.
4. Cost of 2" PJF is not paid for separately and shall be included with Concrete Superstructure.

MODEL: BL_PR_I80 - Plan 3 [Sheet]
FILE NAME: pw://transystems-pw.bentley.com:TRANSYSCORP-PW1-HOSTED/Documents/Projects_2018/CH401/401180022/02-TranSystems/CAD/62R89/Sheets/23-Structural/Moment Slabs/D162R89-SHT-MOMENTSLAB16-STRUCT-19

HBM ENGINEERING GROUP, LLC	USER NAME = jana.issa	DESIGNED - JMI	REVISED -	STATE OF ILLINOIS DEPARTMENT OF TRANSPORTATION	ANCHORAGE SLAB 16 ANCHORAGE SLAB PLAN AND ELEVATION 15	F.A.I. RTE.	SECTION	COUNTY	TOTAL SHEETS	SHEET NO.
		DRAWN - JMI	REVISED -			I-80	FAI 80 22 BR	WILL	1201	830
	PLOT SCALE =	CHECKED - SK, MAI	REVISED -					CONTRACT NO. 62R89		
	PLOT DATE = 12/1/2023	DATE - 10/6/23	REVISED -		SCALE: SHEET S11-19 OF S11-28 SHEETS STA. TO STA.		ILLINOIS	FED. AID PROJECT		

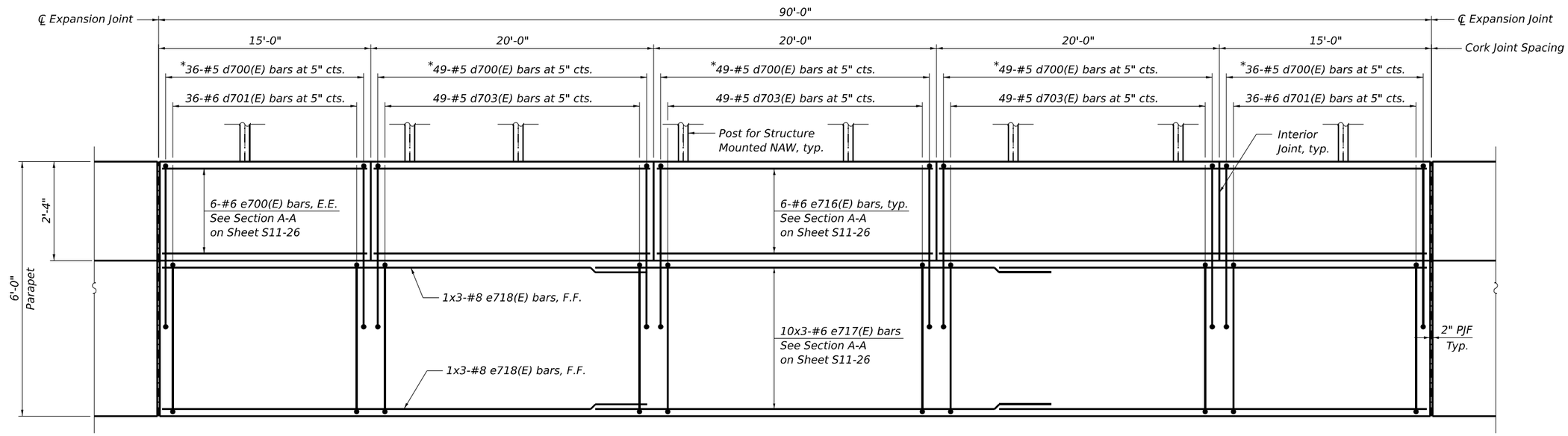

INSIDE ELEVATION OF PARAPET

(Segment 16)

* Tilt 7-d700(E) bars to fit at area of noise abatement anchor rod assembly locations.

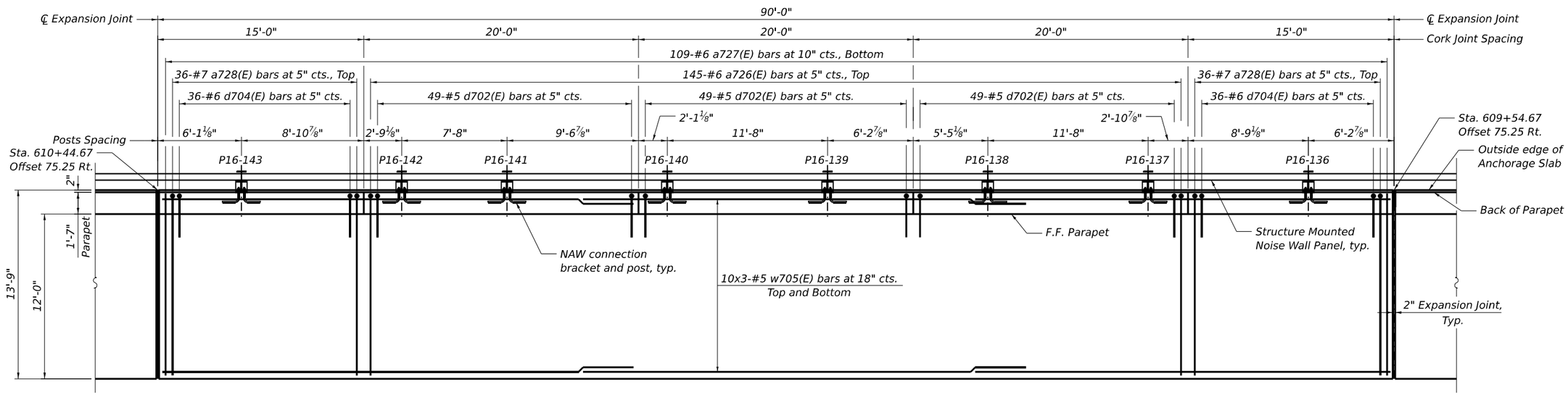

PLAN

(Segment 16)

N

NOTES:

1. Stations and offsets are measured along ℄ I-80 to outside edge of anchorage slab.
2. For Bar diagrams, Expansion, Construction, and Cork Joint Details, and Bill of Material, see Sheet S11-26.
3. For Noise Abatement Wall connection details, see Sheet S11-27.
4. Cost of 2" PJF is not paid for separately and shall be included with Concrete Superstructure.

MODEL: BL_PR_I80 - Plan 3 [Sheet]
FILE NAME: pw://transystems-pw.bentley.com:TRANSYSCORP-PW1-HOSTED/Documents/Projects_2018/CH401/401180022/02-TranSystems/CAD/62R89/Sheets/23-Structural/Moment Slabs/D16R89-SHT-MOMENTSLAB16-STRUCT-20

HBM ENGINEERING GROUP, LLC

USER NAME = Jana.Issa	DESIGNED - JMI	REVISED -	
	DRAWN - JMI	REVISED -	
PLOT SCALE =	CHECKED - SK, MAI	REVISED -	
PLOT DATE = 12/1/2023	DATE - 10/6/23	REVISED -	

STATE OF ILLINOIS
DEPARTMENT OF TRANSPORTATION

ANCHORAGE SLAB 16
ANCHORAGE SLAB PLAN AND ELEVATION 16

SCALE: | SHEET S11-20 OF S11-28 SHEETS | STA. | TO STA.

F.A.I. RTE.	SECTION	COUNTY	TOTAL SHEETS	SHEET NO.
I-80	FAI 80 22 BR	WILL	1201	831
		CONTRACT NO. 62R89		
	ILLINOIS	FED. AID PROJECT		

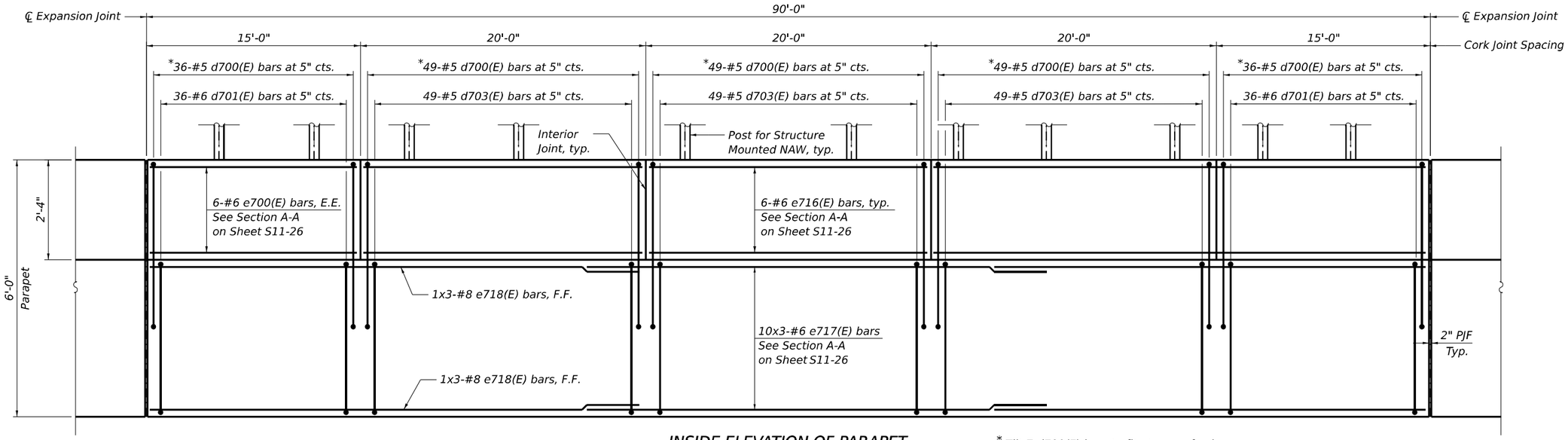

INSIDE ELEVATION OF PARAPET

(Segment 17)

* Tilt 7-d700(E) bars to fit at area of noise abatement anchor rod assembly locations.

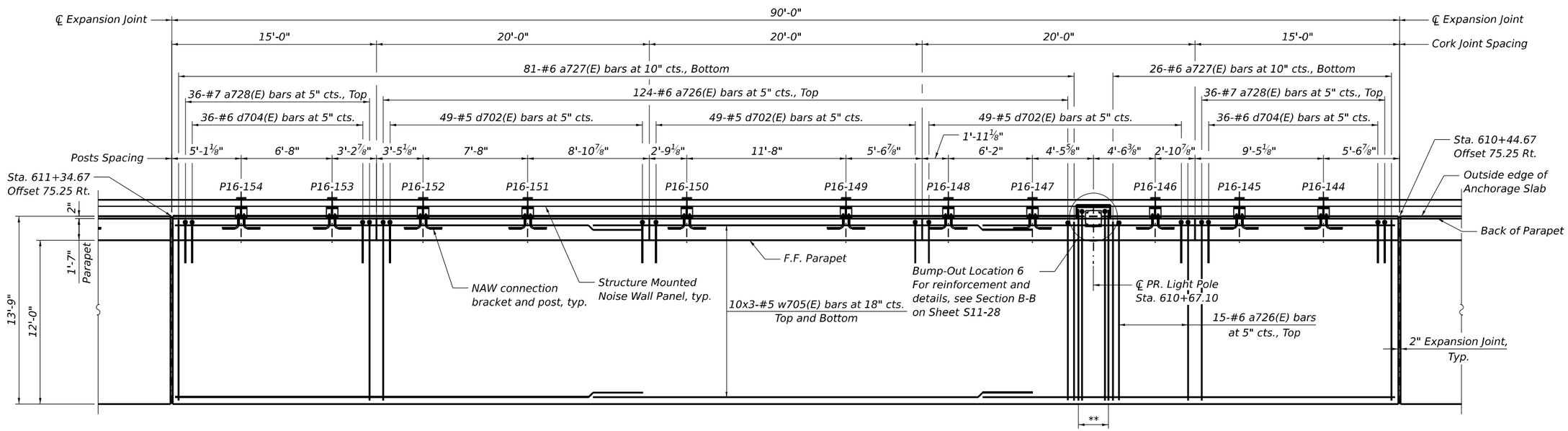

**7-#6 a736(E) bars at 5" cts., Top
4-#6 a737(E) bars at 10" cts., Bottom

PLAN

(Segment 17)

N

NOTES:

1. Stations and offsets are measured along ℄ I-80 to outside edge of anchorage slab.
2. For Bar diagrams, Expansion, Construction, and Cork Joint Details, and Bill of Material, see Sheet S11-26.
3. For Noise Abatement Wall connection details, see Sheet S11-27.
4. Cost of 2" PJF is not paid for separately and shall be included with Concrete Superstructure.

MODEL: BL_PR_I80 - Plan 3 [Sheet]
FILE NAME: pw://transystems-pw.bentley.com:TRANSYSCORP-PW1-HOSTED/Documents/Projects_2018/CH401/401180022/02-TranSystems/CAD/62R89/Sheets/23-Structural/Moment Slabs/D16ZR89-SHT-MOMENTSLAB16-STRUCT-21

HBM ENGINEERING GROUP, LLC	USER NAME = jana.issa	DESIGNED - JMI	REVISED -	STATE OF ILLINOIS DEPARTMENT OF TRANSPORTATION	ANCHORAGE SLAB 16 ANCHORAGE SLAB PLAN AND ELEVATION 17	F.A.I. RTE.	SECTION	COUNTY	TOTAL SHEETS	SHEET NO.
		DRAWN - JMI	REVISED -			I-80	FAI 80 22 BR	WILL	1201	832
	PLOT SCALE =	CHECKED - SK, MAI	REVISED -					CONTRACT NO. 62R89		
	PLOT DATE = 12/1/2023	DATE - 10/6/23	REVISED -		SCALE: SHEET S11-21 OF S11-28 SHEETS STA. TO STA.		ILLINOIS	FED. AID PROJECT		

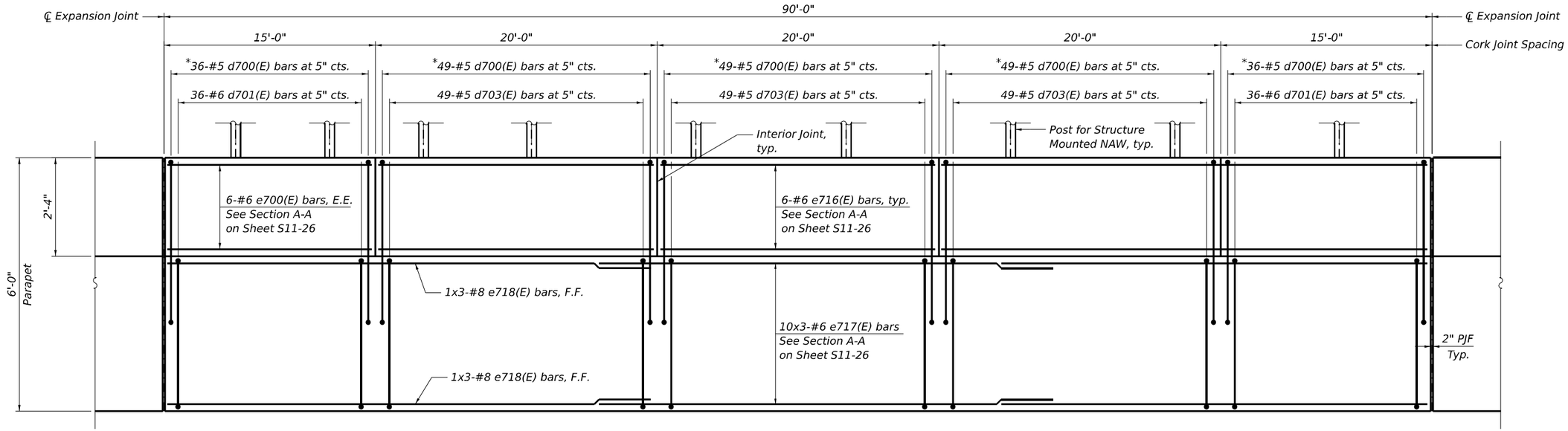

INSIDE ELEVATION OF PARAPET

(Segment 18)

* Tilt 7-d700(E) bars to fit at area of noise abatement anchor rod assembly locations.

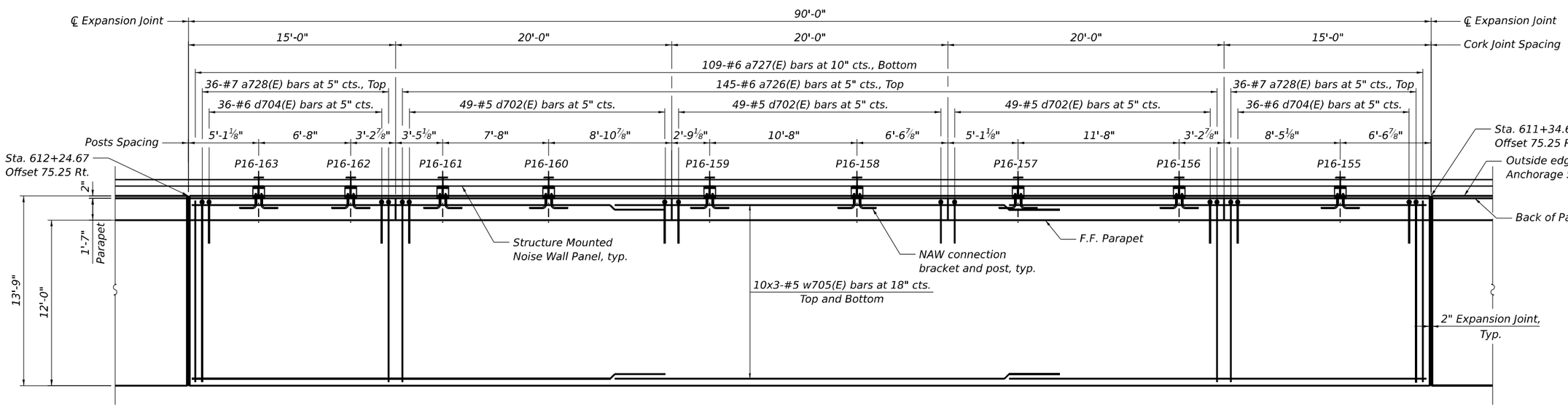

PLAN

(Segment 18)

N

NOTES:

1. Stations and offsets are measured along ℄ I-80 to outside edge of anchorage slab.
2. For Bar diagrams, Expansion, Construction, and Cork Joint Details, and Bill of Material, see Sheet S11-26.
3. For Noise Abatement Wall connection details, see Sheet S11-27.
4. Cost of 2" PJF is not paid for separately and shall be included with Concrete Superstructure.

MODEL: BL_PR_I80 - Plan 3 [Sheet]
FILE NAME: pw://transystems-pw.bentley.com:TRANSYSCORP-PW1-HOSTED/Documents/Projects_2018/CH401/401180022/02-TranSystems:CAD/62R89/Sheets/23-Structural/Moment Slabs/D162R89-SHT-MOMENTSLAB16-STRUCT-22

HBM ENGINEERING GROUP, LLC

USER NAME = Jana.Issa	DESIGNED - JMI	REVISED -	
	DRAWN - JMI	REVISED -	
PLOT SCALE =	CHECKED - SK, MAI	REVISED -	
PLOT DATE = 12/1/2023	DATE - 10/6/23	REVISED -	

STATE OF ILLINOIS
DEPARTMENT OF TRANSPORTATION

ANCHORAGE SLAB 16
ANCHORAGE SLAB PLAN AND ELEVATION 18

SCALE: | SHEET S11-22 OF S11-28 SHEETS | STA. TO STA.

F.A.I. RTE.	SECTION	COUNTY	TOTAL SHEETS	SHEET NO.
I-80	FAI 80 22 BR	WILL	1201	833
		CONTRACT NO. 62R89		
	ILLINOIS	FED. AID PROJECT		

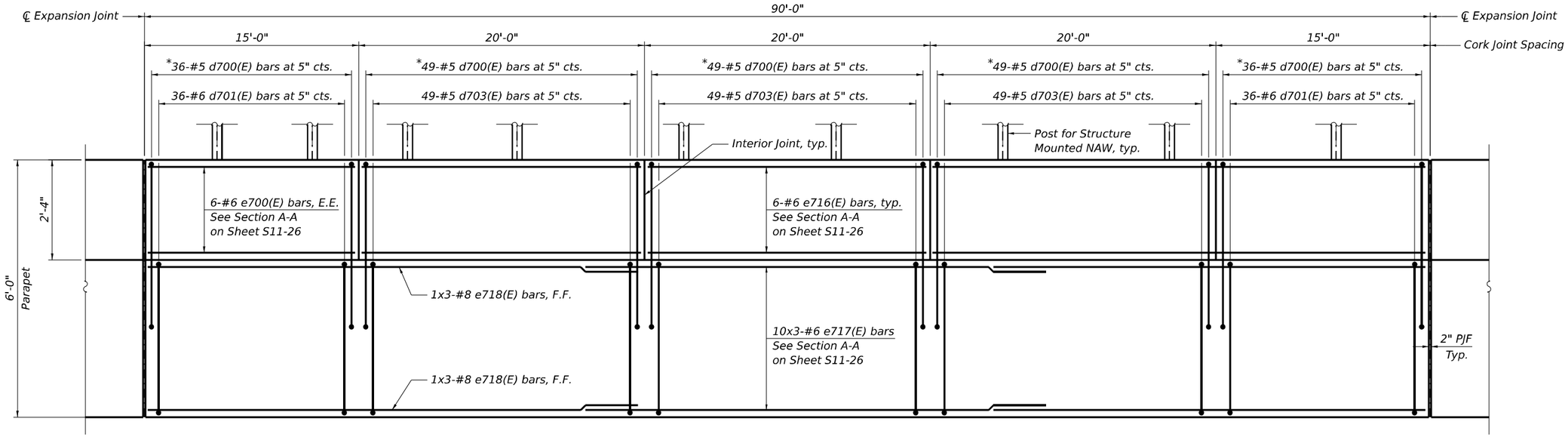

INSIDE ELEVATION OF PARAPET

(Segment 19)

* Tilt 7-d700(E) bars to fit at area of noise abatement anchor rod assembly locations.

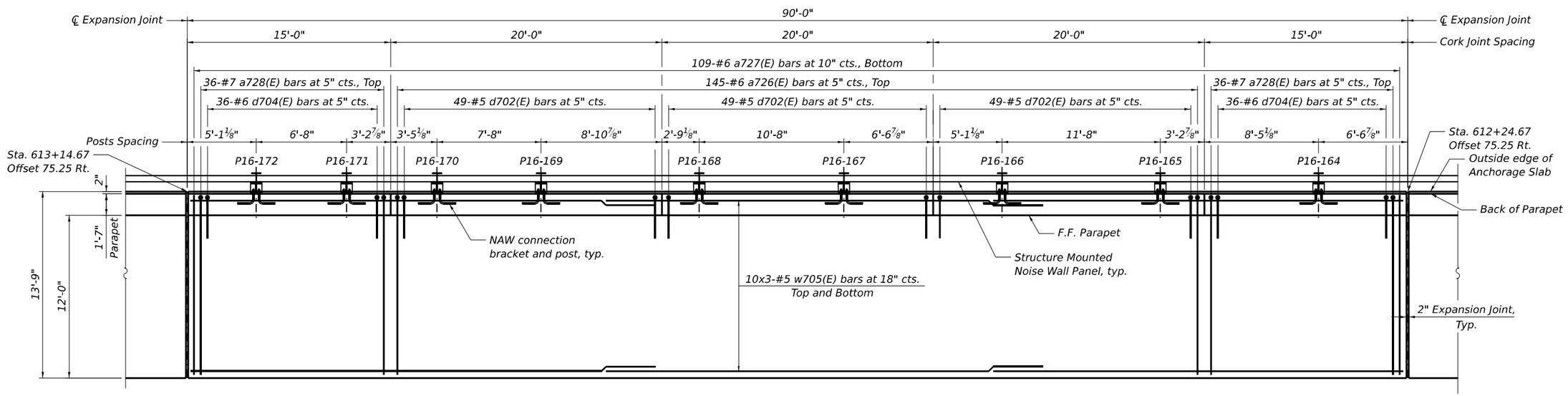

PLAN

(Segment 19)

N

NOTES:

1. Stations and offsets are measured along ℄ I-80 to outside edge of anchorage slab.
2. For Bar diagrams, Expansion, Construction, and Cork Joint Details, and Bill of Material, see Sheet S11-26.
3. For Noise Abatement Wall connection details, see Sheet S11-27.
4. Cost of 2" PJF is not paid for separately and shall be included with Concrete Superstructure.

MODEL: BL_PR_I80 - Plan 3 [Sheet]
FILE NAME: pw://transystems-pw.bentley.com:TRANSYSCORP-PW1-HOSTED/Documents/Projects_2018/CH401/401180022/02-TranSystems/CAD/62R89/Sheets/23-Structural/Moment Slabs/D16ZR89-SHT-MOMENTSLAB16-STRUCT-23

HBM ENGINEERING GROUP, LLC	USER NAME = jana.issa	DESIGNED - JMI	REVISED -	STATE OF ILLINOIS DEPARTMENT OF TRANSPORTATION	ANCHORAGE SLAB 16 ANCHORAGE SLAB PLAN AND ELEVATION 19	F.A.I. RTE.	SECTION	COUNTY	TOTAL SHEETS	SHEET NO.
		DRAWN - JMI	REVISED -			I-80	FAI 80 22 BR	WILL	1201	834
	PLOT SCALE =	CHECKED - SK, MAI	REVISED -					CONTRACT NO. 62R89		
	PLOT DATE = 12/1/2023	DATE - 10/6/23	REVISED -		SCALE: SHEET S11-23 OF S11-28 SHEETS STA. TO STA.		ILLINOIS	FED. AID PROJECT		

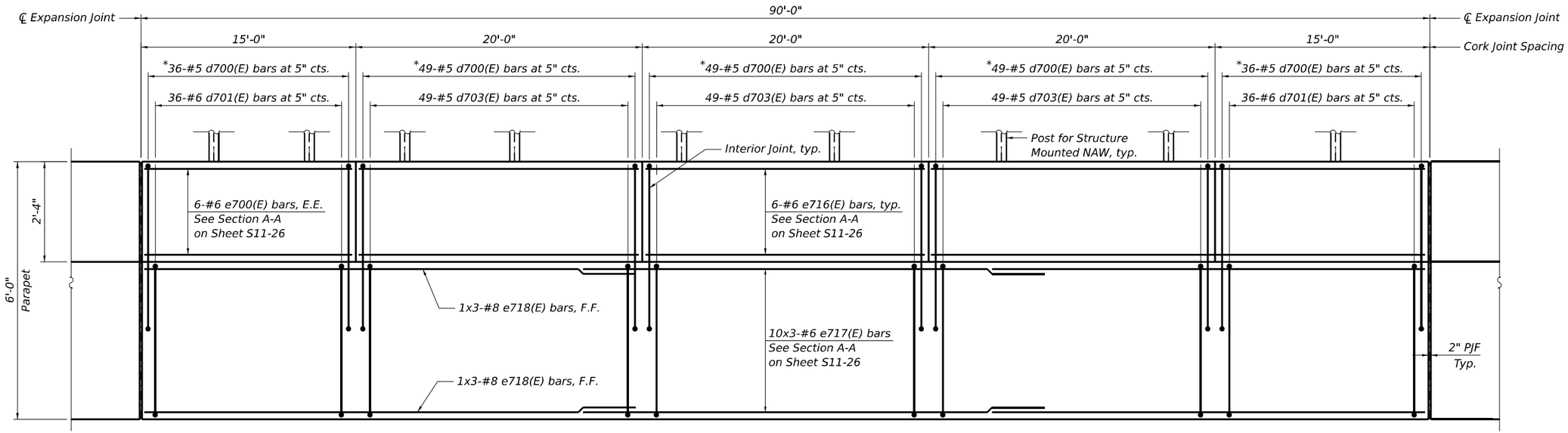

INSIDE ELEVATION OF PARAPET

(Segment 20)

* Tilt 7-d700(E) bars to fit at area of noise abatement anchor rod assembly locations.

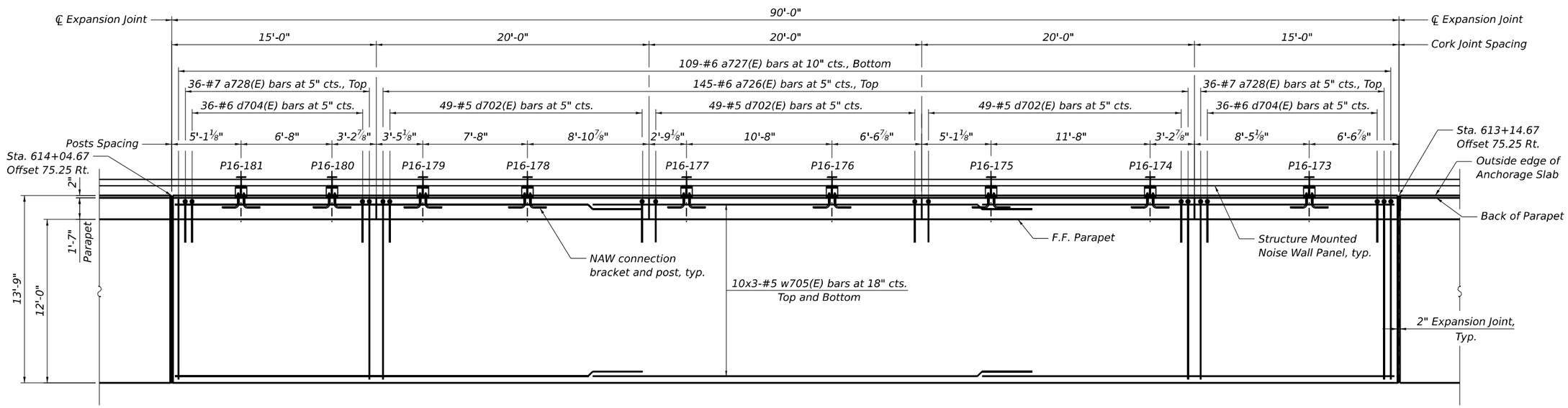

PLAN

(Segment 20)

N

NOTES:

1. Stations and offsets are measured along ℄ I-80 to outside edge of anchorage slab.
2. For Bar diagrams, Expansion, Construction, and Cork Joint Details, and Bill of Material, see Sheet S11-26.
3. For Noise Abatement Wall connection details, see Sheet S11-27.
4. Cost of 2" PJF is not paid for separately and shall be included with Concrete Superstructure.

MODEL: BL_PL_I80 • Plan 3 [Sheet]
FILE NAME: pw://transystems-pw.bentley.com:TRANSYSCORP-PW1-HOSTED/Documents/Projects_2018/CH401/401180022202-TranSystems/CAD/62R89/Sheets/23-Structural/Moment Slabs/D162R89-SHT-MOMENTSLAB16-STRUCT-24

HBM ENGINEERING GROUP, LLC

USER NAME = Jana.Issa	DESIGNED - JMI	REVISED -	
	DRAWN - JMI	REVISED -	
PLOT SCALE =	CHECKED - SK, MAI	REVISED -	
PLOT DATE = 12/1/2023	DATE - 10/6/23	REVISED -	

STATE OF ILLINOIS
DEPARTMENT OF TRANSPORTATION

ANCHORAGE SLAB 16
ANCHORAGE SLAB PLAN AND ELEVATION 20

SCALE: | SHEET S11-24 OF S11-28 SHEETS | STA. | TO STA.

F.A.I. RTE.	SECTION	COUNTY	TOTAL SHEETS	SHEET NO.
I-80	FAI 80 22 BR	WILL	1201	835
		CONTRACT NO. 62R89		
	ILLINOIS	FED. AID PROJECT		

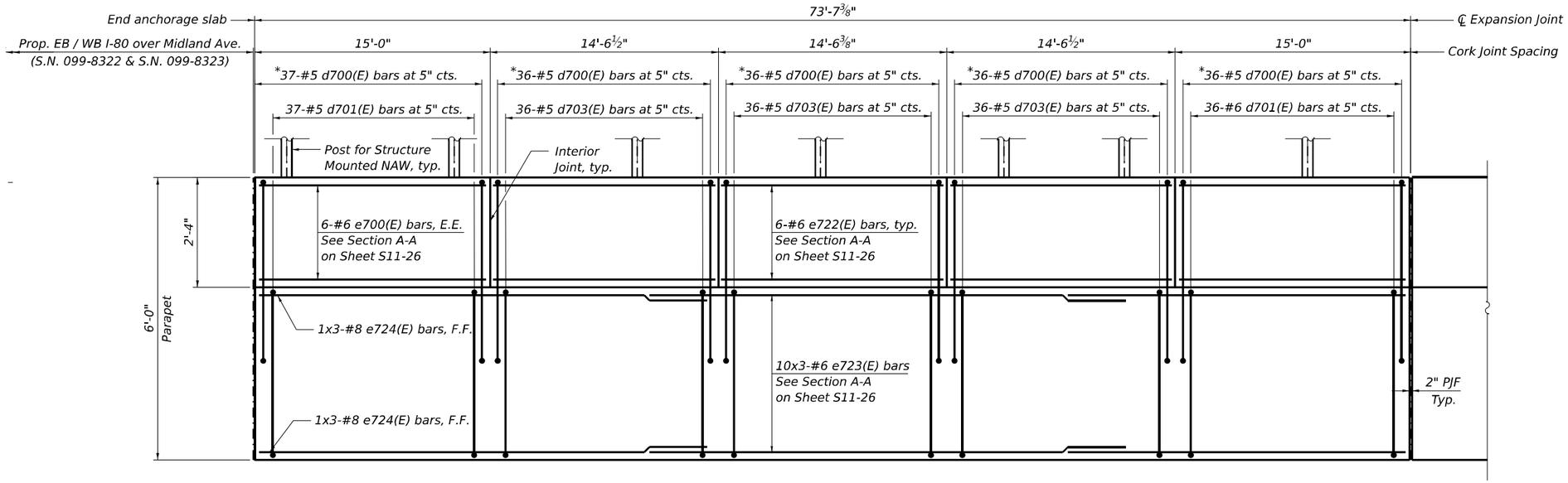

INSIDE ELEVATION OF PARAPET

(Segment 21)

* Tilt 7-d700(E) bars to fit at area of noise abatement anchor rod assembly locations.

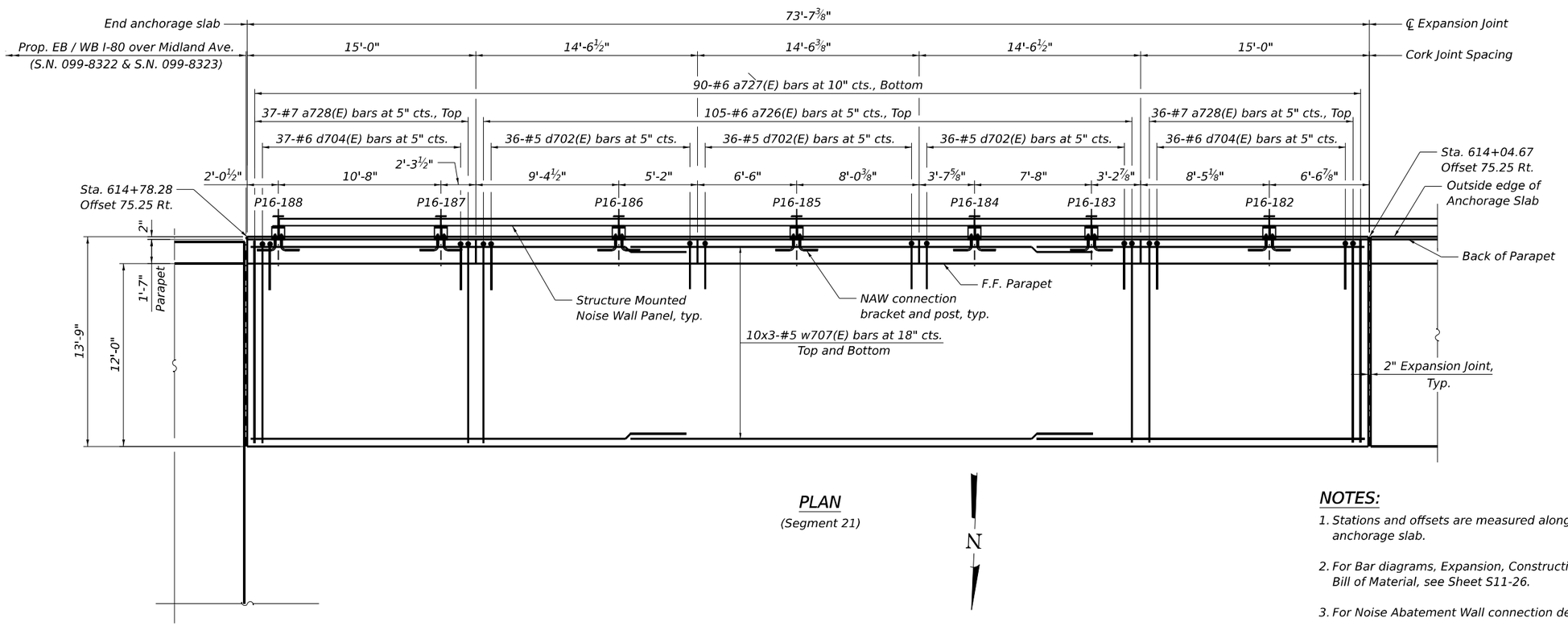

PLAN

(Segment 21)

N

NOTES:

1. Stations and offsets are measured along ℄ I-80 to outside edge of anchorage slab.
2. For Bar diagrams, Expansion, Construction, and Cork Joint Details, and Bill of Material, see Sheet S11-26.
3. For Noise Abatement Wall connection details, see Sheet S11-27.
4. Cost of 2" PJF is not paid for separately and shall be included with Concrete Superstructure.

MODEL: BL_PR_I80 - Plan 3 [Sheet]
FILE NAME: pw://transystems-pw.bentley.com:TRANSYSCORP-PW1-HOSTED/Documents/Projects_2018/CH401/401180022/02-TranSystems/CAD/62R89/Sheets/23-Structural/Moment Slabs/D162R89-SHT-MOMENTSLAB16-STRUCT-23

HBM ENGINEERING GROUP, LLC

USER NAME = jana.issa	DESIGNED - JMI	REVISED -	
	DRAWN - JMI	REVISED -	
PLOT SCALE =	CHECKED - SK, MAI	REVISED -	
PLOT DATE = 12/1/2023	DATE - 10/6/23	REVISED -	

STATE OF ILLINOIS
DEPARTMENT OF TRANSPORTATION

ANCHORAGE SLAB 16
ANCHORAGE SLAB PLAN AND ELEVATION 21

SCALE: | SHEET S11-25 OF S11-28 SHEETS | STA. | TO STA.

F.A.I. RTE.	SECTION	COUNTY	TOTAL SHEETS	SHEET NO.
I-80	FAI 80 22 BR	WILL	1201	836
		CONTRACT NO. 62R89		
	ILLINOIS	FED. AID PROJECT		

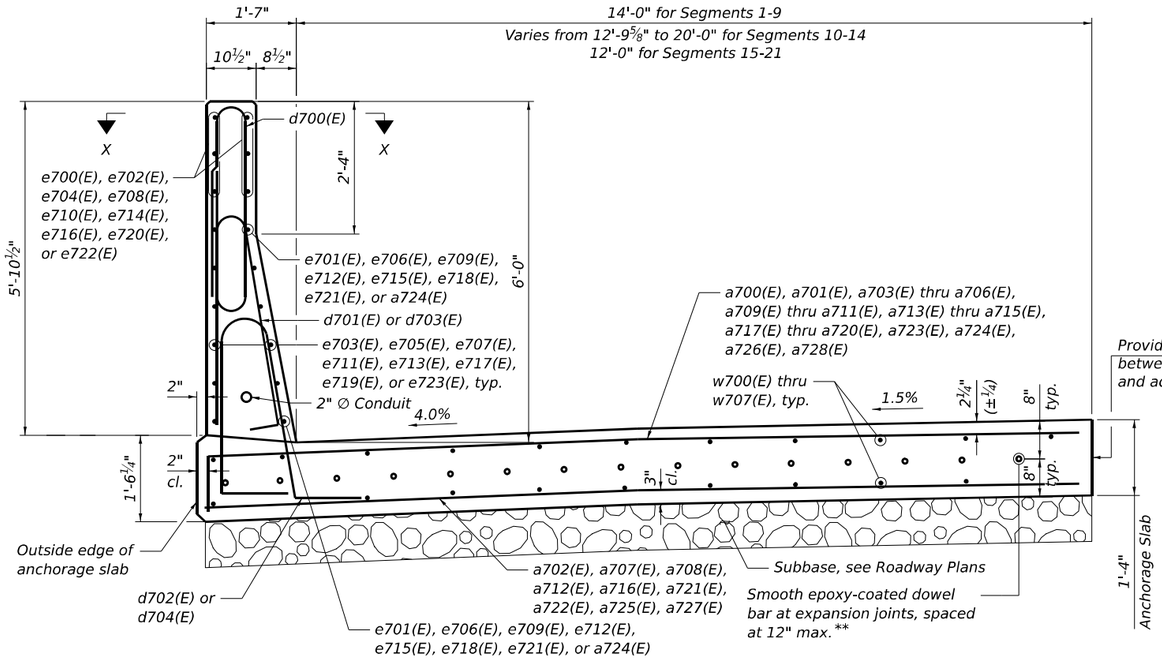

SECTION A-A

(Noise Wall Connection Detail not shown for clarity)

BAR	E	F
a700(E) or a701(E)	15'-5"	16'-5"
a726(E) or a728(E)	13'-5"	14'-5"
a729(E) or a731(E)	16'-1"	17'-1"
a732(E)	21'-1"	22'-1"
a734(E)	15'-1"	16'-1"
a736(E)	14'-1"	15'-1"

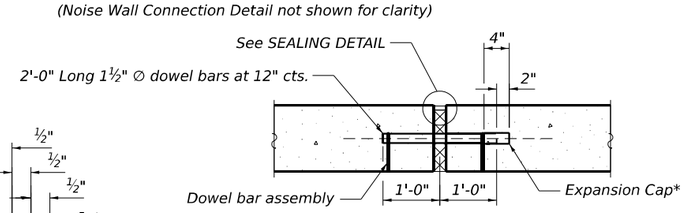

TRANSVERSE EXPANSION JOINT

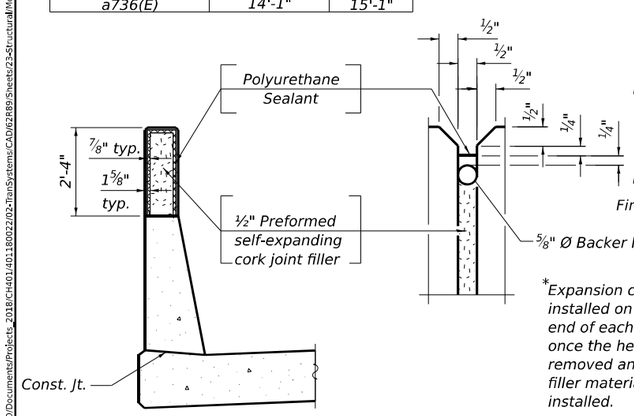

CORK PARAPET JOINT DETAILS

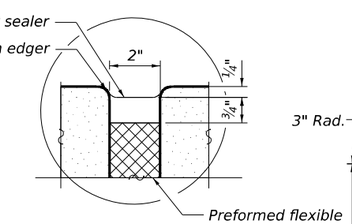

SEALING DETAIL

*Expansion caps shall be installed on the exposed end of each dowel bar once the header has been removed and the joint filler material has been installed.

**Cost included with Concrete Superstructure

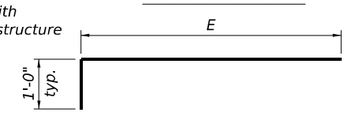

BARS a700(E), a701(E), a726(E), a728(E), a729(E), a731(E), a732(E), a734(E), and a736(E)

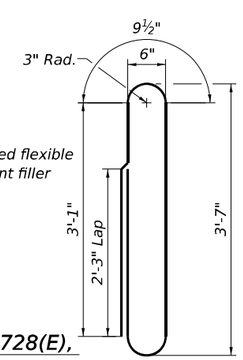

BAR d700(E)

NOTES:

1. The ⅛" aluminum sheet shall be ASTM B 209 alloy 3303-H14 and coated to minimize reaction with wet concrete. Cost included with Concrete Superstructure.
2. The polyurethane sealant shall be according to Article 1050.04 of the Std. Spec. and the color should be gray.
3. For Section X-X and Noise Abatement Wall connection details, see Sheet S11-27.

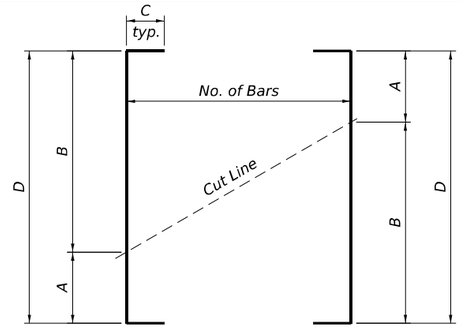

SERIES OF BAR CUTTING DIAGRAM

See table for dimensions. Make all cuts normal to bar axis

BAR TABLE SCHEDULE

Bar	No. of Sets Req'd	Bar No.	No. of Bars Per	A	B	C	D
a703(E)	1	#7	18	21'-1"	21'-5"	1'-0"	44'-6"
a704(E)	1	#6	40	20'-5"	21'-1"	1'-0"	43'-6"
a705(E)	1	#6	30	19'-11"	20'-5"	1'-0"	42'-4"
a706(E)	1	#7	18	19'-7"	19'-11"	1'-0"	41'-6"
a707(E)	1	#6	30	20'-5"	21'-5"	-	41'-10"
a708(E)	1	#6	24	19'-7"	20'-5"	-	40'-0"
a709(E)	1	#7	18	19'-4"	19'-7"	1'-0"	40'-11"
a710(E)	1	#6	73	18'-1"	19'-4"	1'-0"	39'-5"
a711(E)	1	#7	18	17'-10"	18'-1"	1'-0"	37'-11"
a712(E)	1	#6	55	17'-10"	19'-7"	-	37'-5"
a713(E)	1	#7	18	17'-6"	17'-10"	1'-0"	37'-4"
a714(E)	1	#6	73	16'-4"	17'-6"	1'-0"	35'-10"
a715(E)	1	#7	18	16'-0"	16'-4"	1'-0"	34'-4"
a716(E)	1	#6	55	16'-0"	17'-10"	-	33'-10"
a717(E)	1	#7	18	15'-8"	16'-0"	1'-0"	33'-8"
a718(E)	1	#6	73	14'-6"	15'-8"	1'-0"	32'-2"
a719(E)	1	#7	5	14'-5"	14'-6"	1'-0"	30'-11"
a720(E)	1	#7	10	14'-2"	14'-5"	1'-0"	30'-7"
a721(E)	1	#6	48	14'-5"	16'-0"	-	30'-5"
a722(E)	1	#6	6	14'-2"	14'-5"	-	28'-7"
a723(E)	1	#7	18	13'-11"	14'-2"	1'-0"	30'-1"
a724(E)	1	#6	30	13'-5"	13'-11"	1'-0"	29'-4"
a725(E)	1	#6	24	13'-5"	14'-2"	-	27'-7"

MINIMUM BAR LAPS

#5 bar = 3'-4"
#6 bar = 3'-7"
#8 bar = 4'-9"

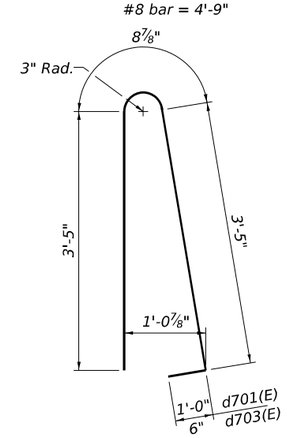

BARS d701(E) and d703(E)

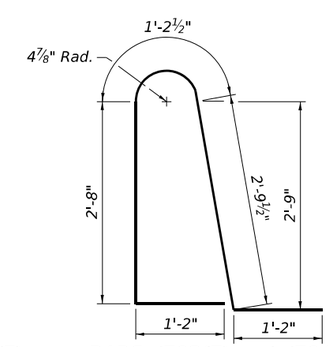

BARS d702(E) and d704(E)

(Back leg to extend 9½" into anchorage slab)

BILL OF MATERIAL

Bar	No.	Size	Length	Shape
a700(E)	1302	#6	16'-5"	
a701(E)	644	#7	16'-5"	
a702(E)	980	#6	15'-5"	
a703(E)	18	#7	44'-6"	
a704(E)	40	#6	43'-6"	
a705(E)	30	#6	42'-4"	
a706(E)	18	#7	41'-6"	
a707(E)	30	#6	41'-10"	
a708(E)	24	#6	40'-0"	
a709(E)	18	#7	40'-11"	
a710(E)	73	#6	39'-5"	
a711(E)	18	#7	37'-11"	
a712(E)	55	#6	37'-5"	
a713(E)	18	#7	37'-4"	
a714(E)	73	#6	35'-10"	
a715(E)	18	#7	34'-4"	
a716(E)	55	#6	33'-10"	
a717(E)	18	#7	33'-8"	
a718(E)	73	#6	32'-2"	
a719(E)	5	#7	30'-11"	
a720(E)	10	#7	30'-7"	
a721(E)	48	#6	30'-5"	
a722(E)	6	#6	28'-7"	
a723(E)	18	#7	30'-1"	
a724(E)	30	#6	29'-4"	
a725(E)	24	#6	27'-7"	
a726(E)	1054	#6	14'-5"	
a727(E)	803	#6	13'-5"	
a728(E)	541	#7	14'-5"	
a729(E)	7	#7	17'-1"	
a730(E)	12	#6	16'-1"	
a731(E)	14	#6	17'-1"	
a732(E)	7	#6	22'-1"	
a733(E)	4	#6	21'-1"	
a734(E)	7	#7	16'-1"	
a735(E)	4	#6	15'-1"	
a736(E)	7	#6	15'-1"	
a737(E)	4	#6	14'-1"	
d700(E)	4556	#5	10'-0"	
d701(E)	1514	#6	8'-7"	
d702(E)	3042	#5	9'-0"	
d703(E)	3042	#5	8'-1"	
d704(E)	1514	#6	9'-0"	
d705(E)	30	#6	7'-7"	
e700(E)	252	#6	14'-8"	
e701(E)	6	#8	32'-10"	
e702(E)	18	#6	19'-6"	
e703(E)	30	#6	32'-1"	
e704(E)	24	#6	15'-2"	
e705(E)	30	#6	33'-0"	
e706(E)	6	#8	33'-9"	
e707(E)	30	#6	30'-0"	
e708(E)	18	#6	17'-5"	
e709(E)	6	#8	30'-9"	
e710(E)	18	#6	17'-1"	
e711(E)	30	#6	29'-8"	
e712(E)	6	#8	30'-5"	
e713(E)	30	#6	31'-6"	
e714(E)	18	#6	18'-10"	
e715(E)	6	#8	32'-2"	
e716(E)	252	#6	19'-8"	
e717(E)	420	#6	32'-3"	
e718(E)	84	#8	33'-0"	
e719(E)	40	#6	28'-10"	
e720(E)	24	#6	18'-5"	
e721(E)	8	#8	29'-9"	
e722(E)	18	#6	14'-3"	
e723(E)	30	#6	26'-10"	
e724(E)	6	#8	27'-7"	
e725(E)	72	#6	8'-11"	
w700(E)	72	#5	32'-5"	
w701(E)	72	#5	33'-4"	
w702(E)	72	#5	30'-4"	
w703(E)	72	#5	29'-9"	
w704(E)	72	#5	31'-3"	
w705(E)	978	#5	32'-1"	
w706(E)	96	#5	28'-8"	
w707(E)	60	#5	26'-8"	

BILL OF MATERIAL CONTINUED

Concrete Superstructure	Cu Yd	1895.2
Protective Coat	Sq Yd	1439
Reinforcement Bars, Epoxy Coated	Pound	425,070
Noise Abatement Wall Anchor Rod Assembly	Each	188

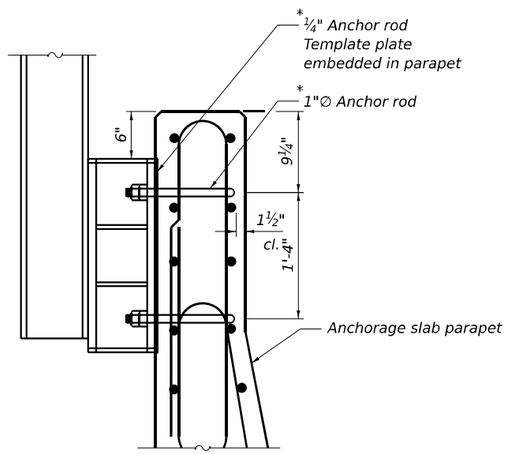

NOISE WALL CONNECTION DETAIL

*Cost of four anchor rods, template plate, and associated hardware included in the cost for one each of Noise Abatement Wall Anchor Rod Assembly.

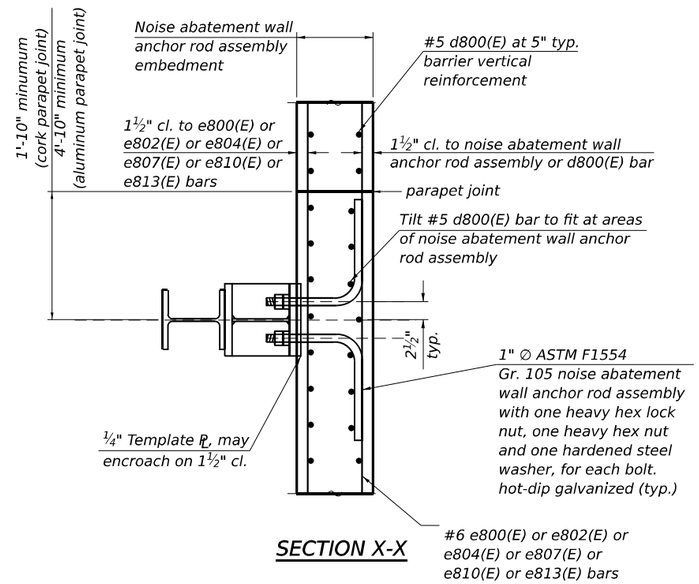

SECTION X-X

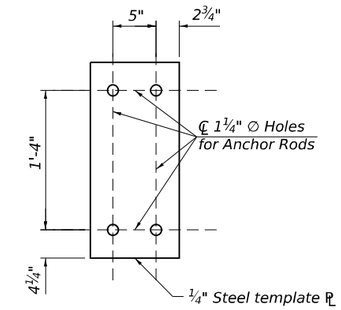

TEMPLATE PLATE FOR NOISE ABATEMENT WALL ANCHOR ROD ASSEMBLY

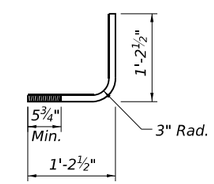

NOISE ABATEMENT WALL ANCHOR ROD ASSEMBLY

NOTE:

1. Post and post connection bracket details shown on anchorage slab plans for information only. See Noise Abatement Walls plans for full details.

MODEL: BL_PR_I80 - Plan 3 [Sheet]
FILE NAME: pw://transystems-pw.bentley.com:TRANSYSCORP-PW1-HOSTED/Documents/Projects_2018/CH401/401180022/02-TranSystems/CAD/62R89/Sheet/23-Structural/Moment Slabs/D162R89-SHT-MOMENTSLAB16-STRUCT-27

HBM ENGINEERING GROUP, LLC	USER NAME = jana.issa	DESIGNED - JMI	REVISED -	STATE OF ILLINOIS DEPARTMENT OF TRANSPORTATION	ANCHORAGE SLAB 16 NOISE ABATEMENT WALL CONNECTION DETAILS	F.A.I. RTE.	SECTION	COUNTY	TOTAL SHEETS / SHEET NO.
		DRAWN - JMI	REVISED -			I-80	FAI 80 22 BR	WILL	1201 / 838
	PLOT SCALE =	CHECKED - SK, MAI	REVISED -					CONTRACT NO. 62R89	
	PLOT DATE = 12/1/2023	DATE - 10/6/23	REVISED -		SCALE: SHEET S11-27 OF S11-28 SHEETS STA. TO STA.		ILLINOIS	FED. AID PROJECT	

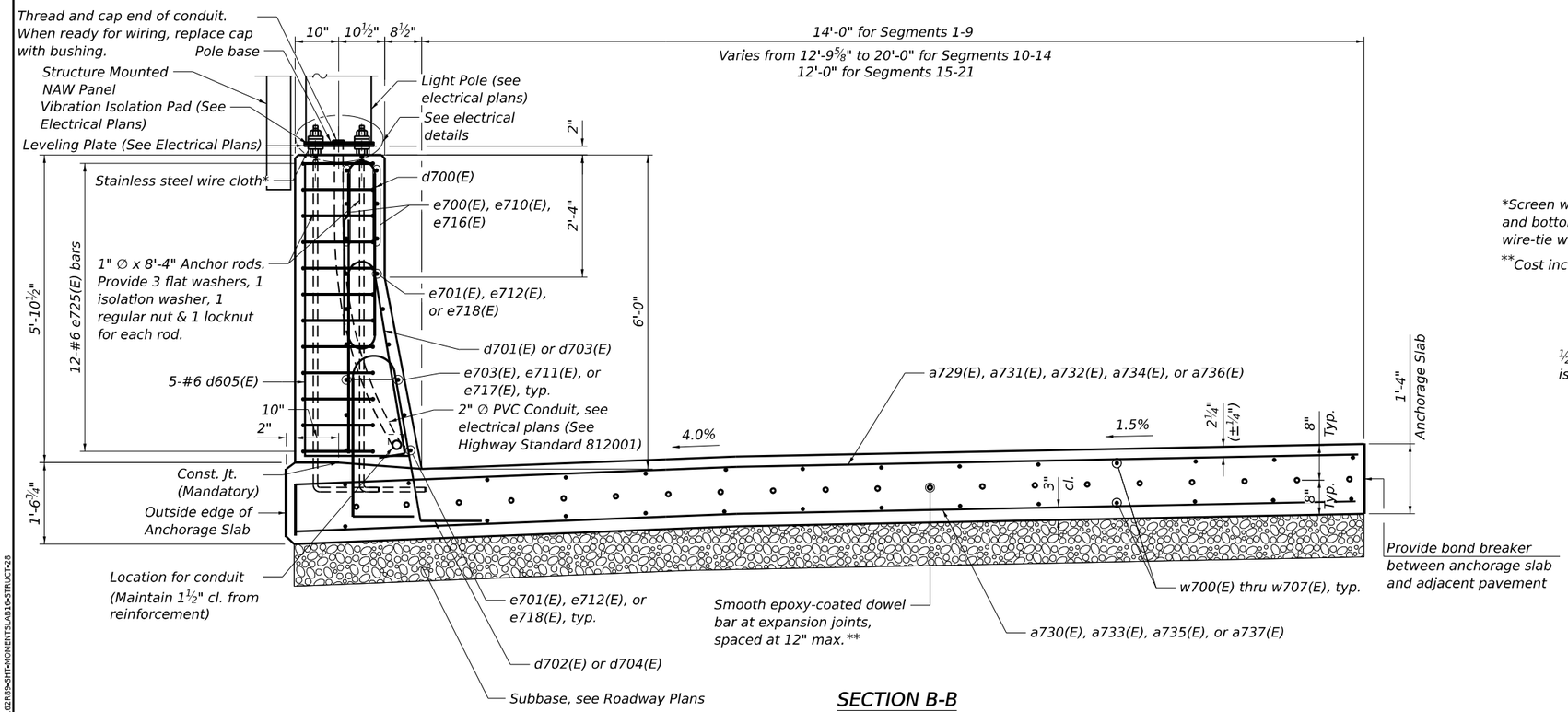

SECTION B-B

(Bump-Out Location 1 - Sta. 596+90.54)
(Bump-Out Location 2 - Sta. 599+10.35)
(Bump-Out Location 3 - Sta. 601+57.81)
(Bump-Out Location 4 - Sta. 604+64.29)
(Bump-Out Location 5 - Sta. 607+65.35)
(Bump-Out Location 6 - Sta. 610+67.10)
(Stations taken at back edge of Bump-out)

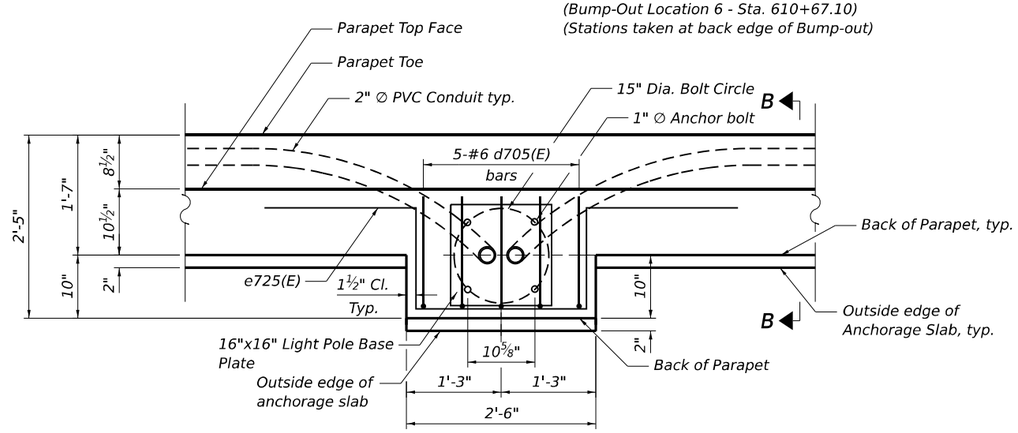

PLAN

(Noise Abatement Wall not shown for clarity)
(Bump-Out Location 1 - Sta. 596+90.54)
(Bump-Out Location 2 - Sta. 599+10.35)
(Bump-Out Location 3 - Sta. 601+57.81)
(Bump-Out Location 4 - Sta. 604+64.29)
(Bump-Out Location 5 - Sta. 607+65.35)
(Bump-Out Location 6 - Sta. 610+67.10)
(Stations taken at back edge of Bump-out)

NOTES:

1. All dimensions are in inches unless otherwise shown.
2. The cost of anchor rods is included with Concrete Superstructure.
3. For BOM, see Sheet S11-26.
4. Anchor rods, nuts and washers shall be in accordance with standard specifications Articles 1070.02 and 1006.09.

*Screen wrapped around nuts and anchor rods between foundation and bottom of leveling plate. Provide 6" minimum overlap and wire-tie with matching wire.

**Cost included with Concrete Superstructure

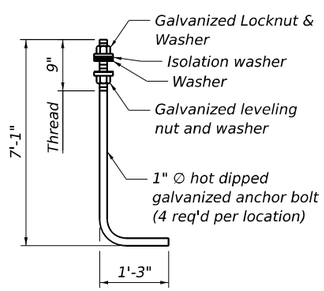

ANCHOR ROD

(ASTM F 1554 GRADE 105)

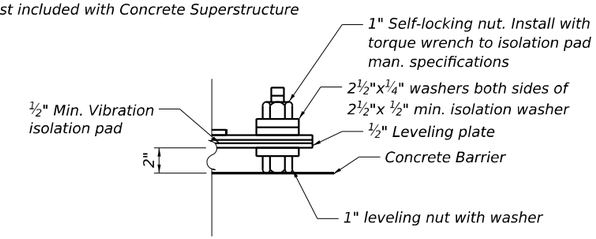

WASHER DETAIL

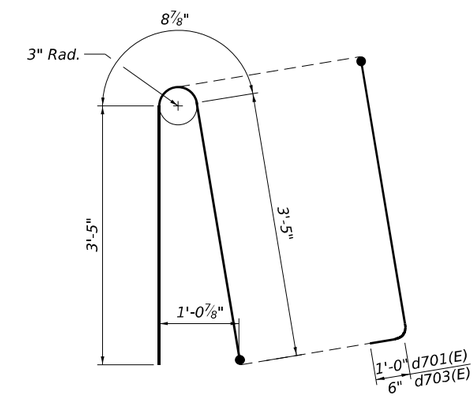

ALTERNATE BARS d701(E) and d703(E)

(For 72" constant slope parapet when conduit is present)

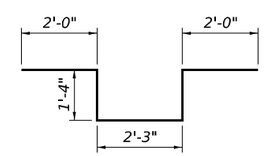

BAR e725(E)

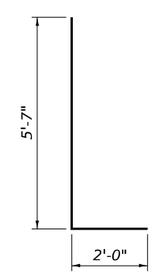

BAR d705(E)

MODEL: BL_PR_J80 - Plan 3 [Sheet]
FILE NAME: pw://transystems-pw.bentley.com:TRANSYSCORP-PW1-HOSTED/Documents/Projects_2018/CH401/401180022/02-TransSystems/CAD/62R89/Sheets/23-Structural/Moment Slabs/D162R89-SHT-MOMENTSLAB16-STRUCT-28

HBM ENGINEERING GROUP, LLC	USER NAME = jana.issa	DESIGNED - JMI	REVISED -	STATE OF ILLINOIS DEPARTMENT OF TRANSPORTATION	ANCHORAGE SLAB 16 ANCHORAGE SLAB BUMP-OUT SECTIONS AND DETAILS	F.A.I. RTE.	SECTION	COUNTY	TOTAL SHEETS / SHEET NO.
		DRAWN - JMI	REVISED -			I-80	FAI 80 22 BR	WILL	1201 / 839
	PLOT SCALE =	CHECKED - SK, MAI	REVISED -					CONTRACT NO. 62R89	
	PLOT DATE = 12/1/2023	DATE - 10/6/23	REVISED -		SCALE: SHEET S11-28 OF S11-28 SHEETS STA. TO STA.		ILLINOIS	FED. AID PROJECT	

Benchmark: Benchmark: Cut cross on top of southerly foundation bolt of the first light pole east of the gore at I-80 and I-80 off-ramp to Houbolt Road north the ramp, on the south side of eastbound I-80 at Station 614+78.96, Offset 67.639' LT, Elev. 642.474. See Alignment, Tie and Benchmark Sheets.

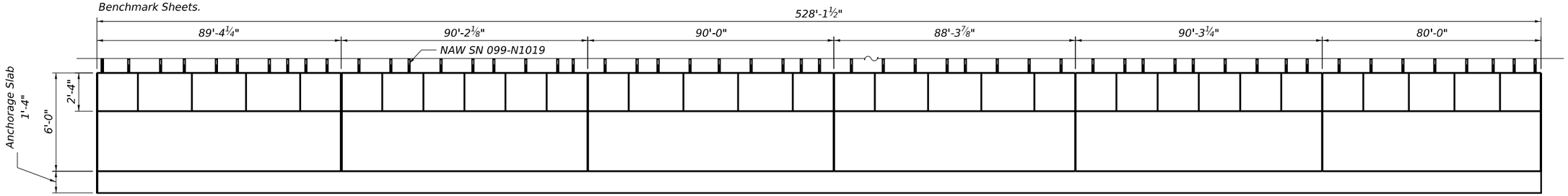

ELEVATION

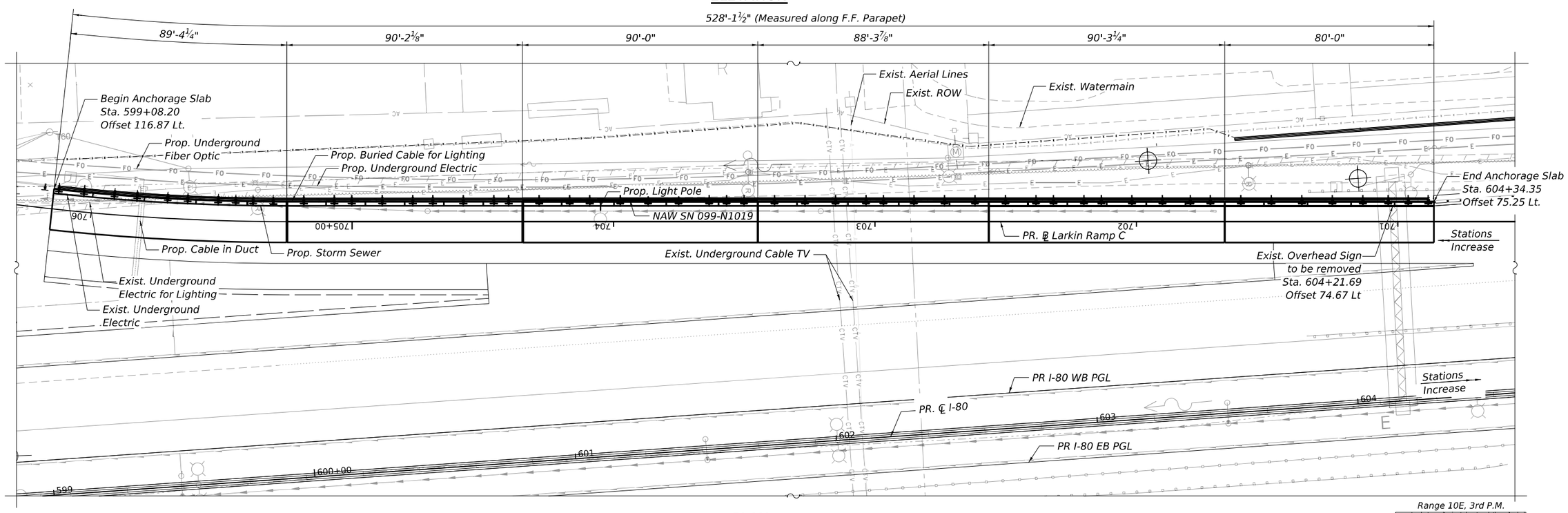

PLAN

ABBREVIATIONS

Exp.	Expansion	F.F.	Front Face
Jt.	Joint	B.F.	Back Face
PGL	Profile Grade Line	E.E.	Each End
Lt.	Left	Prop.	Proposed
Rt.	Right	PR	Proposed
Spa.	Space	Exist.	Existing
Sta.	Station	ROW	Right of Way
Elev.	Elevation	NAW	Noise Abatement Wall
Typ.	Typical	PJF	Preformed Joint Filler

DESIGN LOADS

Overturning and Sliding (Static)
106k

Strength (Dynamic)
260k

DESIGN SPECIFICATIONS

2020 AASHTO LRFD Bridge Design Specifications, 9th Edition

DESIGN STRESSES

FIELD UNITS

f'c = 4,000 psi (Concrete)
fy = 60,000 psi (Reinforcement)

N

NOTES:

1. For General Notes, Index of Sheets, and Total Bill of Material, see Sheet S12-2.
2. Stations and offsets are measured along ℄ I-80 to outside edge of anchorage slab.
3. For details of NAW SN 099-N1019, see plans in this contract.

APPROVED
For Structural Adequacy Only
Engineer of Bridges & Structures

STATE OF ILLINOIS
MOUSSA A. ISSA
081-005738
CHICAGO, ILLINOIS
LICENSED STRUCTURAL ENGINEER

Signed Moussa A. Issa
Dr. Moussa A. Issa, S.E. IL. LIC. No. 081-005738
Expires 11-30-2024

Date 06-21-2023 For Sheets S12-1 thru S12-11

Range 10E, 3rd P.M.

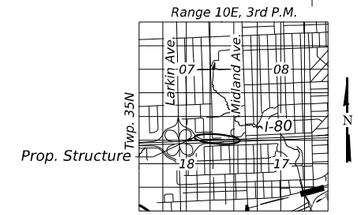

LOCATION SKETCH

GENERAL PLAN AND ELEVATION
ANCHORAGE SLAB ALONG LARKIN RAMP C
F.A.I. RTE. I-80
SEC. F.A.I. 80 22 BR
WILL COUNTY
STA. 599+08.20 TO STA. 604+34.35
(ANCHORAGE SLAB 17)

HBM ENGINEERING GROUP, LLC

USER NAME = jana.issa	DESIGNED - EN	REVISED -	
	DRAWN - EN	REVISED -	
PLOT SCALE =	CHECKED - SK, MAI	REVISED -	
PLOT DATE = 12/1/2023	DATE - 10/6/23	REVISED -	

STATE OF ILLINOIS
DEPARTMENT OF TRANSPORTATION

ANCHORAGE SLAB 17
GENERAL PLAN AND ELEVATION

SCALE: SHEET S12-1 OF S12-11 SHEETS STA. TO STA.

F.A.I. RTE.	SECTION	COUNTY	TOTAL SHEETS	SHEET NO.
I-80	FAI 80 22 BR	WILL	1201	840
		CONTRACT NO. 62R89		
	ILLINOIS	FED. AID PROJECT		

MODEL: BL_PR_I80 - Plan 3 [Sheet]
FILE NAME: pw://transystems-pw.bentley.com:TRANSYSCORP-PW1-HOSTED/Documents/Projects_2018/CH401/401180022/02-TranSystems/CAD/62R89/Sheets/23-Structural/Moment Slabs/D162R89-SHT-MOMENTSLAB17-STRUCT-1

GENERAL NOTES

CAST-IN-PLACE CONCRETE

1. All exposed concrete edges shall have 1¾"x45° chamfer, except where shown otherwise. Chamfer on vertical edges shall be continued a minimum of one foot below finished ground level.

REINFORCEMENT BARS

1. Reinforcement bars designated "(E)" shall be epoxy coated.

2. Bars noted thus, 3x2-#5 indicates 3 lines of bars with 2 lengths of bars per line.

CONSTRUCTION

1. Plan dimensions and details relative to the existing structure have been taken from existing plans are subject to nominal construction variations. The Contractor shall field verify existing dimensions and details affecting new construction and make necessary approved adjustments prior to construction or ordering of materials. Such variations shall not be cause for additional compensation for a change in scope of the work, however, the Contractor will be paid for the quantity actually furnished at the unit price bid for the work.

2. No construction joint except those on the plans shall be allowed unless approved by the engineer.

3. The contractor may request copies of existing construction plans that are currently on file with the IDOT. The request shall be in writing with the uderstanding that any reproduction cost will be at the contractor's expense at no additional cost to the IDOT.

4. It shall be the Contractor's responsibility to verify the location of all utilities prior to starting construction. Contact J.U.L.I.E., 800-892-0123.

5. The contractor shall field verify location of the existing utilities prior to construction. The contractor shall take precautions not to damage existing utilities. Any damage shall be repaired by the Contractor at no additional cost.

INDEX OF SHEETS

TOTAL BILL OF MATERIAL

ITEM	UNIT	TOTAL
Concrete Superstructure	Cu Yd	539.6
Protective Coat	Sq Yd	1,229
Reinforcement Bars, Epoxy Coated	Pound	120,500
Noise Abatement Wall Anchor Rod Assembly	Each	53

UTILITY CROSSING TABLE

UTILITY	STATION*	OFFSET*	ELEV.	COMMENTS
Prop. Underground Electric	599+09.16 to 601+51.97	122.19' to 97.38'	-	Parallel to slab within 10 feet of slab. Station and offsets are measured along the utility.
Exist. Underground	599+13.03	114.24'	-	Runs Parallel to slab
Exist. Underground Electric for Lighting	599+34.58	110.80'	-	-
Prop. Cable in Duct	599+41.43	109.83'	-	-
Prop. Underground Fiber Optic	599+09.91 to 601+78.16	126.34' to 103.18'	-	Parallel to slab within 10 feet of slab. Station and offsets are measured along the utility.
Prop. Buried Cable for Lighting	599+22.45 to 604+25.23	114.69' to 85.91'	-	Parallel to slab (3 in. outside the edge of slab). Station and offsets are measured along the utility.
Prop. Light Pole	601+16.21	95.74'	-	-
Exist. Underground Cable	602+05.00	89.53'	-	-
Exist. Underground Cable Tv	602+10.00	89.18'	-	-
Ex. Aerial Lines	602+12.96	88.97'	-	-

*Stations and offsets are taken to the Front Face of the parapet unless otherwise noted

LEGEND

- Exist. Underground Telephone
- Exist. Underground Electric
- Prop. Underground Electric
- Prop. Lighting Cable
- Exist. Underground Gas
- Exist. Aerial Line
- Exist. Underground Fiber Optic
- Prop. Underground Fiber Optic
- Exist. Underground Cable
- Exist. Pipe Underdrain
- Prop. Pipe Underdrain
- Exist. Storm Sewer
- Prop. Storm Sewer
- Prop. Guardrail
- Exist. Guardrail
- Exist. Fence
- Exist. Access Control & ROW
- Exist. Cable Barrier
- Exist. Lighting.
- Prop. Lighting
- Prop. Drainage
- Prop. Concrete Headwall
- Soil Boring

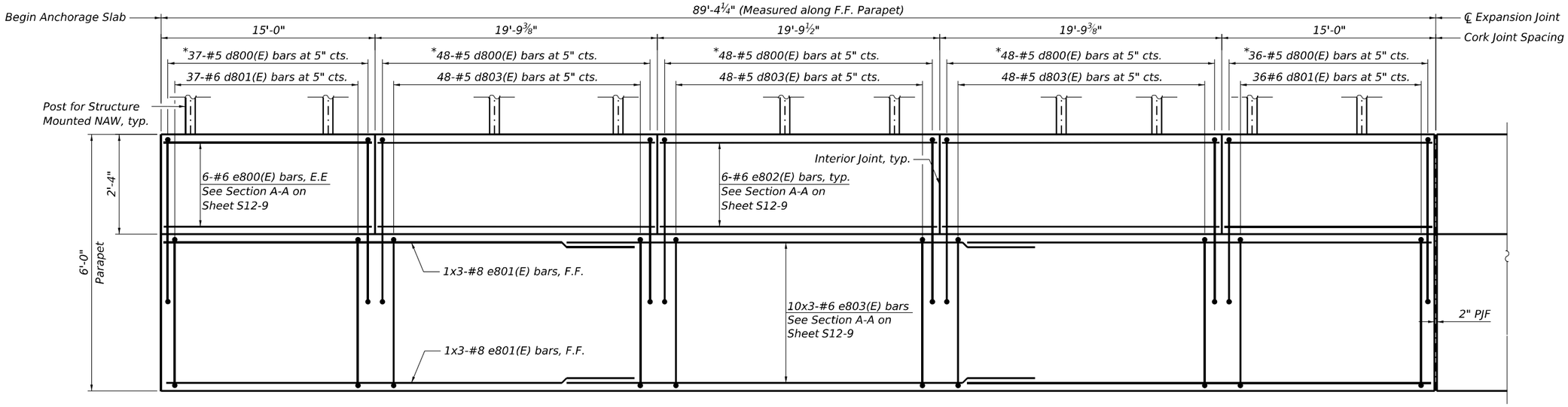

INSIDE ELEVATION OF PARAPET

(Segment 1)

* Tilt 7-d800(E) bars to fit at area of noise abatement anchor rod assembly locations.

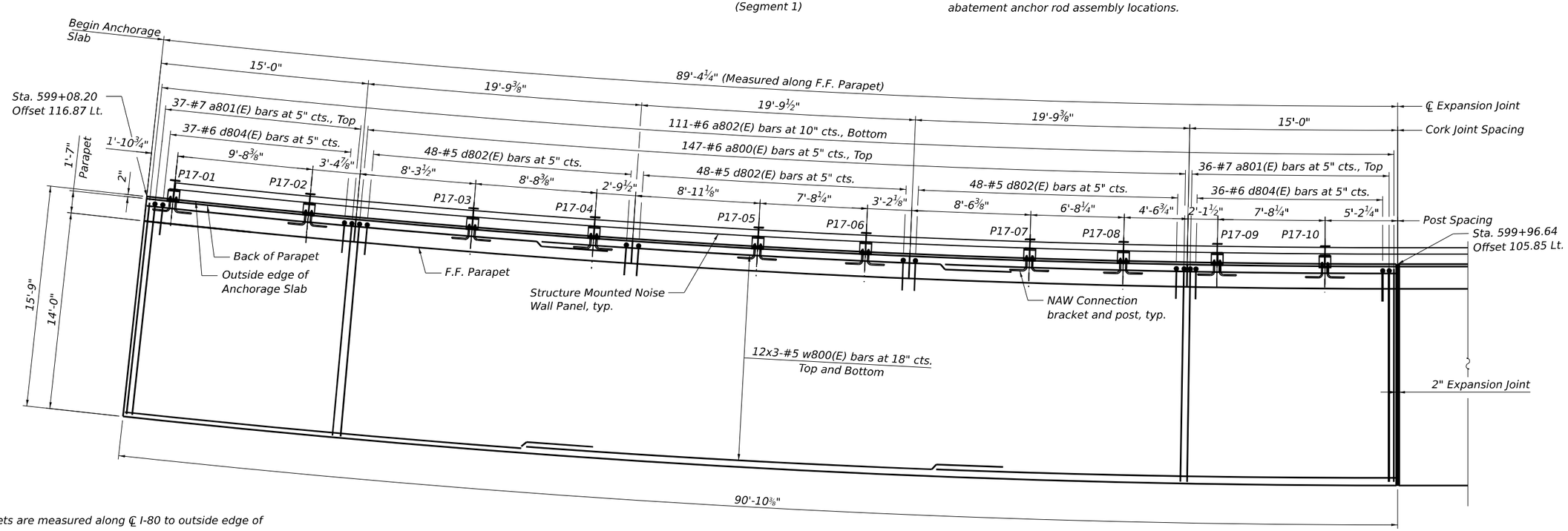

PLAN

(Segment 1)

N

NOTES:

1. Stations and offsets are measured along ℄ I-80 to outside edge of anchorage slab.
2. For Bar diagrams, Expansion, Construction, and Cork Joint Details, and Bill of Material, see Sheet S12-9.
3. For Noise Abatement Wall connection details, see Sheet S12-10
4. Cost of 2" PJF is not paid for separately and shall be included with Concrete Superstructure.

MODEL: BL_PR_I80 - Plan 3 [Sheet]
FILE NAME: pw://transystems-pw.bentley.com:TRANSYSCORP-PW1-HOSTED/Documents/Projects_2018/CH401/401180022/02-TransSystems/CAD/62R89/Sheets/23-Structural/Moment Slabs/D162R89-SHT-MOMENTSLAB17-STRUCT-3

HBM ENGINEERING GROUP, LLC

USER NAME = Jana.Issa	DESIGNED - EN	REVISED -	
	DRAWN - EN	REVISED -	
PLOT SCALE =	CHECKED - SK, MAI	REVISED -	
PLOT DATE = 12/1/2023	DATE - 10/6/23	REVISED -	

STATE OF ILLINOIS
DEPARTMENT OF TRANSPORTATION

ANCHORAGE SLAB 17
ANCHORAGE SLAB PLAN AND ELEVATION 1

SCALE: | SHEET S12-3 OF S12-11 SHEETS | STA. TO STA.

F.A.I. RTE.	SECTION	COUNTY	TOTAL SHEETS	SHEET NO.
I-80	FAI 80 22 BR	WILL	1201	842
		CONTRACT NO. 62R89		
	ILLINOIS	FED. AID PROJECT		

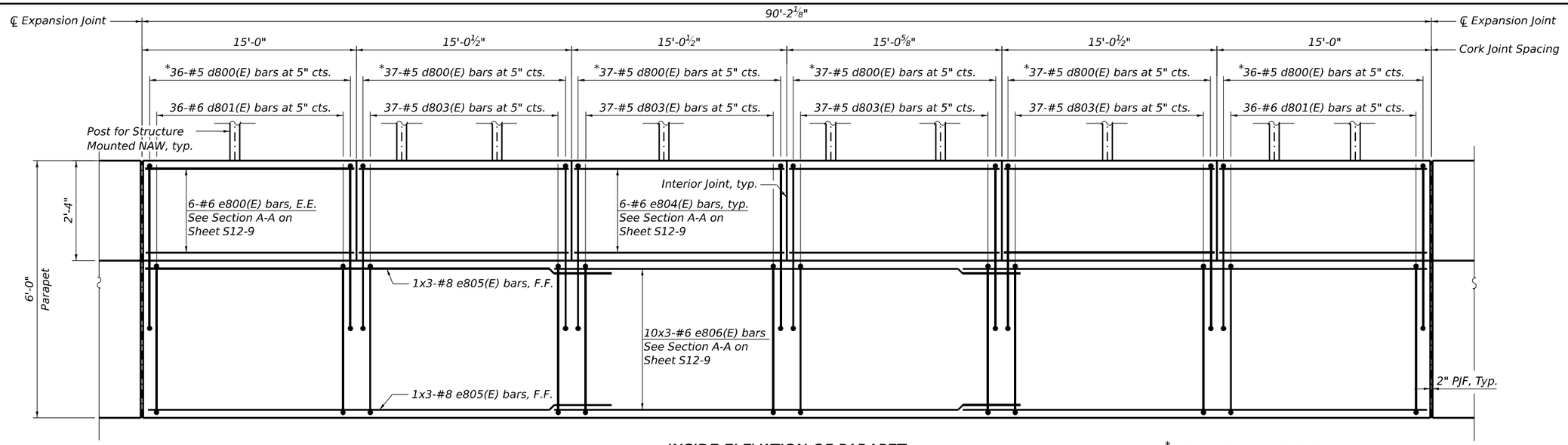

INSIDE ELEVATION OF PARAPET

(Segment 2)

* Tilt 7-d800(E) bars to fit at area of noise abatement anchor rod assembly locations.

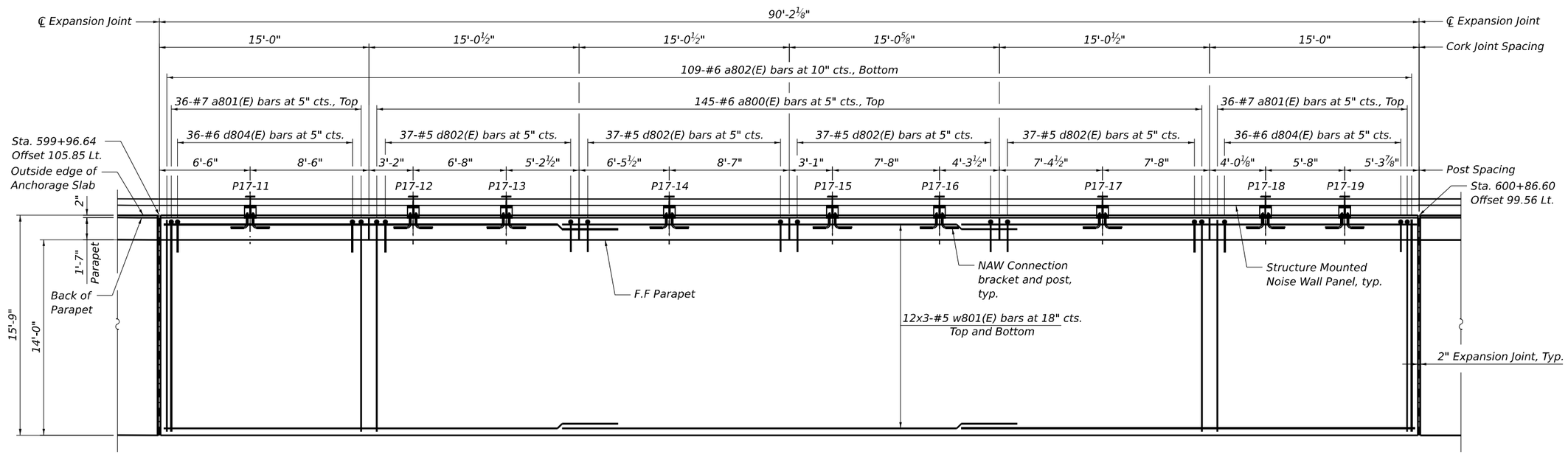

PLAN

(Segment 2)

N

NOTES:

1. Stations and offsets are measured along ℄ I-80 to outside edge of anchorage slab.
2. For Bar diagrams, Expansion, Construction, and Cork Joint Details, and Bill of Material, see Sheet S12-9.
3. For Noise Abatement Wall connection details, see Sheet S12-10
4. Cost of 2" PJF is not paid for separately and shall be included with Concrete Superstructure.

MODEL: BL_PR_I80 + Plan 3 [Sheet]
FILE NAME: pw://transystems-pw.bentley.com:TRANSYSCORP-PW1-HOSTED/Documents/Projects_2018/CH401/401180022/02-TranSystems/CAD/62R89/Sheets/23-Structural/Moment Slabs/D162R89-SHT-MOMENTSLAB17-STRUCT-4

HBM ENGINEERING GROUP, LLC

USER NAME = Jana.Issa	DESIGNED - EN	REVISED -	
	DRAWN - EN	REVISED -	
PLOT SCALE =	CHECKED - SK, MAI	REVISED -	
PLOT DATE = 12/1/2023	DATE - 10/6/23	REVISED -	

STATE OF ILLINOIS
DEPARTMENT OF TRANSPORTATION

ANCHORAGE SLAB 17
ANCHORAGE SLAB PLAN AND ELEVATION 2

SCALE: | SHEET S12-4 OF S12-11 SHEETS | STA. | TO STA.

F.A.I. RTE.	SECTION	COUNTY	TOTAL SHEETS	SHEET NO.
I-80	FAI 80 22 BR	WILL	1201	843
		CONTRACT NO. 62R89		
	ILLINOIS	FED. AID PROJECT		

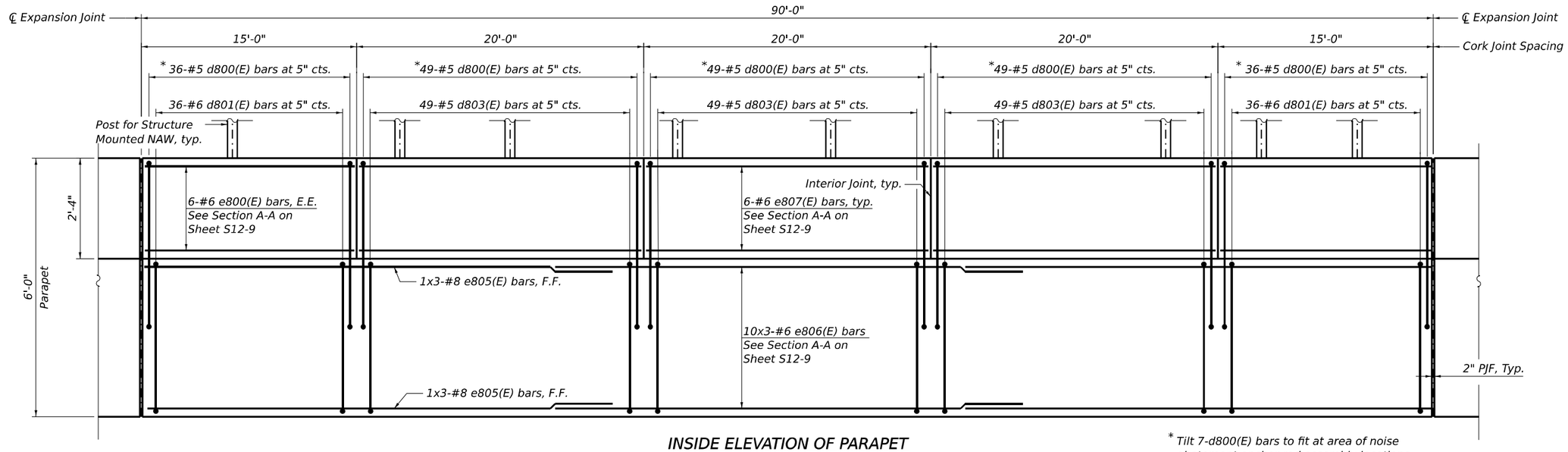

INSIDE ELEVATION OF PARAPET

(Segment 3)

* Tilt 7-d800(E) bars to fit at area of noise abatement anchor rod assembly locations.

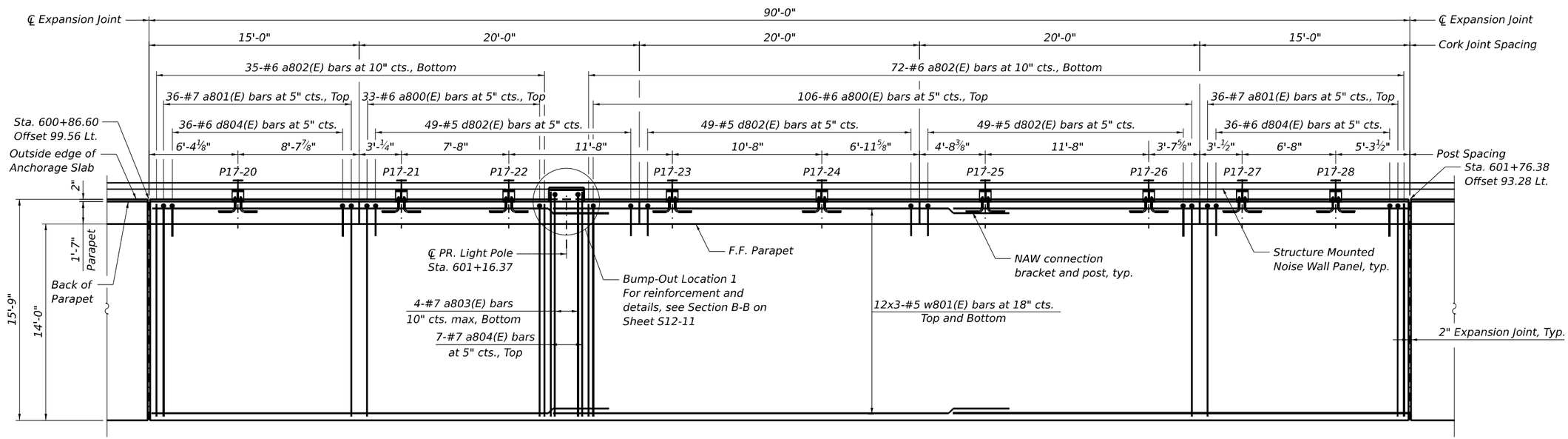

PLAN

(Segment 3)

N

NOTES:

1. Stations and offsets are measured along ℄ I-80 to outside edge of anchorage slab.
2. For Bar diagrams, Expansion, Construction, and Cork Joint Details, and Bill of Material, see Sheet S12-9.
3. For Noise Abatement Wall connection details, see Sheet S12-10
4. Cost of 2" PJF is not paid for separately and shall be included with Concrete Superstructure.

MODEL: BL_PR_I80 • Plan 3 [Sheet]
FILE NAME: pw://transystems-pw.bentley.com:TRANSYSCORP-PW1-HOSTED/Documents/Projects_2018/CH401/40118002202-TranSystems/CAD/62R89/Sheets/23-Structural/Moment Slabs/D162R89-SHT-MOMENTSLAB17-STRUCT-5

HBM ENGINEERING GROUP, LLC

USER NAME = jana.issa	DESIGNED - EN	REVISED -	
	DRAWN - EN	REVISED -	
PLOT SCALE =	CHECKED - SK, MAI	REVISED -	
PLOT DATE = 12/1/2023	DATE - 10/6/23	REVISED -	

STATE OF ILLINOIS
DEPARTMENT OF TRANSPORTATION

ANCHORAGE SLAB 17
ANCHORAGE SLAB PLAN AND ELEVATION 3

SCALE: | SHEET S12-5 OF S12-11 SHEETS | STA. | TO STA.

F.A.I. RTE.	SECTION	COUNTY	TOTAL SHEETS	SHEET NO.
I-80	FAI 80 22 BR	WILL	1201	844
		CONTRACT NO. 62R89		
	ILLINOIS	FED. AID PROJECT		

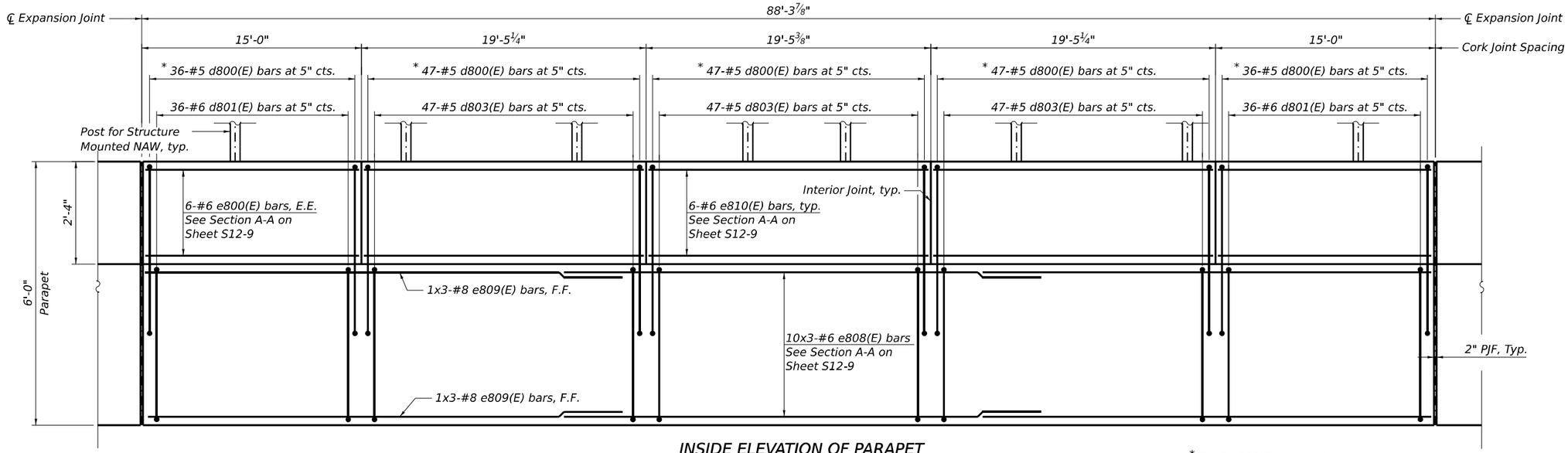

INSIDE ELEVATION OF PARAPET

(Segment 4)

* Tilt 7-d800(E) bars to fit at area of noise abatement anchor rod assembly locations.

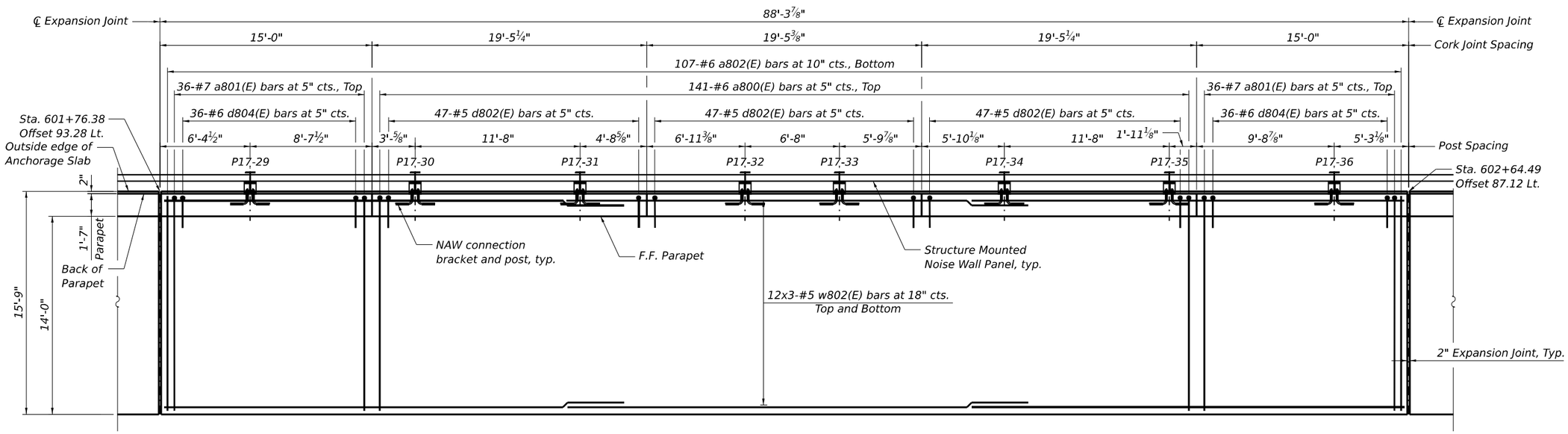

PLAN

(Segment 4)

N

NOTES:

1. Stations and offsets are measured along ℄ I-80 to outside edge of anchorage slab.
2. For Bar diagrams, Expansion, Construction, and Cork Joint Details, and Bill of Material, see Sheet S12-9.
3. For Noise Abatement Wall connection details, see Sheet S12-10
4. Cost of 2" PJF is not paid for separately and shall be included with Concrete Superstructure.

MODEL: BL_PR_I80 - Plan 3 [Sheet]
FILE NAME: pw://transystems-pw.bentley.com:TRANSYSCORP-PW1-HOSTED/Documents/Projects_2018/CH401/401180022/02-TransSystems/CAD/62R89/Sheets/23-Structural/Moment Slabs/D162R89-SHT-MOMENTSLAB17-STRUCT-6

HBM ENGINEERING GROUP, LLC

USER NAME = Jana.Issa	DESIGNED - EN	REVISED -	STATE OF ILLINOIS DEPARTMENT OF TRANSPORTATION	ANCHORAGE SLAB 17	
	DRAWN - EN	REVISED -		ANCHORAGE SLAB PLAN AND ELEVATION 4	
PLOT SCALE =	CHECKED - SK, MAI	REVISED -			
PLOT DATE = 12/1/2023	DATE - 10/6/23	REVISED -		SCALE:	SHEET S12-6 OF S12-11 SHEETS STA. TO STA.

F.A.I. RTE.	SECTION	COUNTY	TOTAL SHEETS	SHEET NO.
I-80	FAI 80 22 BR	WILL	1201	845
		CONTRACT NO. 62R89		
	ILLINOIS	FED. AID PROJECT		

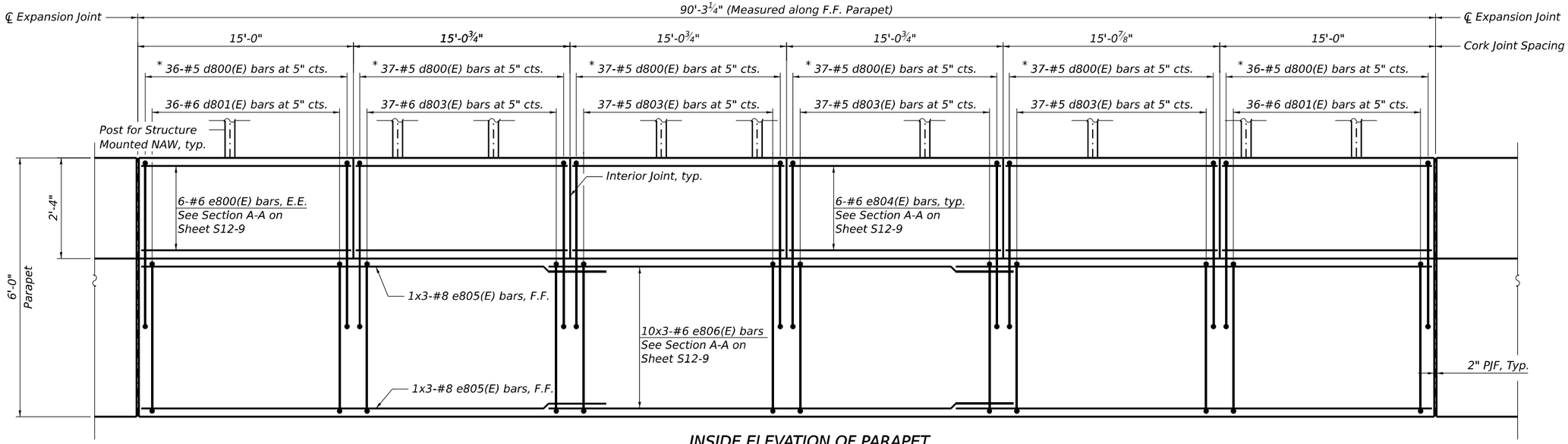

INSIDE ELEVATION OF PARAPET

(Segment 5)

* Tilt 7-d800(E) bars to fit at area of noise abatement anchor rod assembly locations.

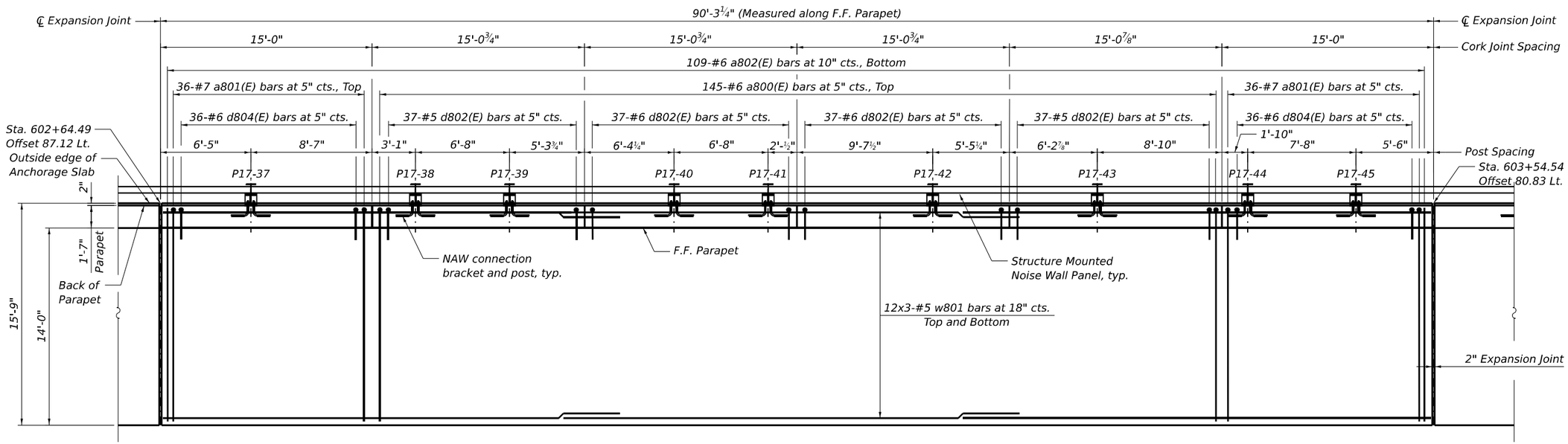

PLAN

(Segment 5)

N

NOTES:

1. Stations and offsets are measured along ℄ I-80 to outside edge of anchorage slab.
2. For Bar diagrams, Expansion, Construction, and Cork Joint Details, and Bill of Material, see Sheet S12-9.
3. For Noise Abatement Wall connection details, see Sheet S12-10
4. Cost of 2" PJF is not paid for separately and shall be included with Concrete Superstructure.

MODEL: BL_PR_I80 • Plan 3 [Sheet]
FILE NAME: pw://transystems-pw.bentley.com:TRANSYSCORP-PW1-HOSTED/Documents/Projects_2018/CH401/401180022/02-TranSystems/CAD/62R89/Sheets/23-Structural/Moment Slabs/D162R89-SHT-MOMENTSLAB17-STRUCT-7

HBM ENGINEERING GROUP, LLC

USER NAME = Jana.Issa	DESIGNED - EN	REVISED -	
	DRAWN - EN	REVISED -	
PLOT SCALE =	CHECKED - SK, MAI	REVISED -	
PLOT DATE = 12/1/2023	DATE - 10/6/23	REVISED -	

STATE OF ILLINOIS
DEPARTMENT OF TRANSPORTATION

ANCHORAGE SLAB 17
ANCHORAGE SLAB PLAN AND ELEVATION 5

SCALE: | SHEET S12-7 OF S12-11 SHEETS | STA. TO STA.

F.A.I. RTE.	SECTION	COUNTY	TOTAL SHEETS	SHEET NO.
I-80	FAI 80 22 BR	WILL	1201	846
		CONTRACT NO. 62R89		
		ILLINOIS	FED. AID PROJECT	

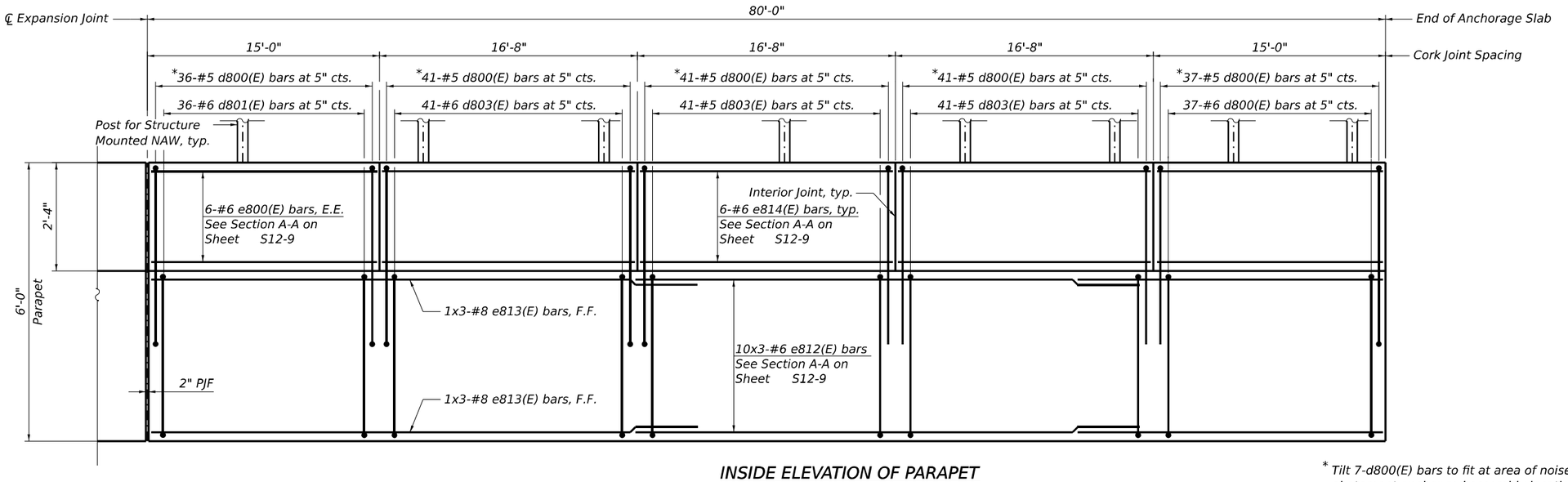

INSIDE ELEVATION OF PARAPET

(Segment 6)

* Tilt 7-d800(E) bars to fit at area of noise abatement anchor rod assembly locations.

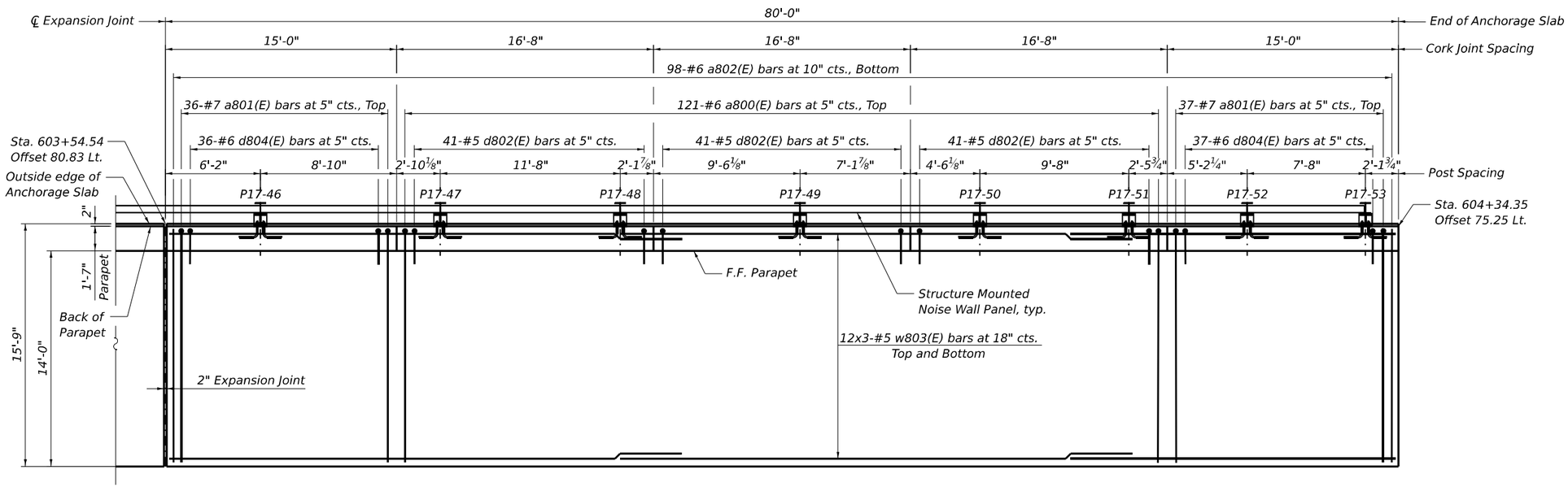

PLAN

(Segment 6)

N

NOTES:

1. Stations and offsets are measured along ℄ I-80 to outside edge of anchorage slab.
2. For Bar diagrams, Expansion, Construction, and Cork Joint Details, and Bill of Material, see Sheet S12-9.
3. For Noise Abatement Wall connection details, see Sheet S12-10
4. Cost of 2" PJF is not paid for separately and shall be included with Concrete Superstructure.

MODEL: BL_PR_I80 - Plan 3 [Sheet]
FILE NAME: pw://transystems-pw.bentley.com:TRANSYSCORP-PW1-HOSTED/Documents/Projects_2018/CH401/401180022/02-TranSystems/CAD/62R89/Sheets/23-Structural/Moment Slabs/D162R89-SHT-MOMENTSLAB17-STRUCT-8

HBM ENGINEERING GROUP, LLC

USER NAME = Jana.Issa	DESIGNED - EN	REVISED -	
	DRAWN - EN	REVISED -	
PLOT SCALE =	CHECKED - SK, MAI	REVISED -	
PLOT DATE = 12/1/2023	DATE - 10/6/23	REVISED -	

STATE OF ILLINOIS
DEPARTMENT OF TRANSPORTATION

ANCHORAGE SLAB 17
ANCHORAGE SLAB PLAN AND ELEVATION 6

SCALE: | SHEET S12-8 OF S12-11 SHEETS | STA. | TO STA.

F.A.I. RTE.	SECTION	COUNTY	TOTAL SHEETS	SHEET NO.
I-80	FAI 80 22 BR	WILL	1201	847
		CONTRACT NO. 62R89		
	ILLINOIS	FED. AID PROJECT		

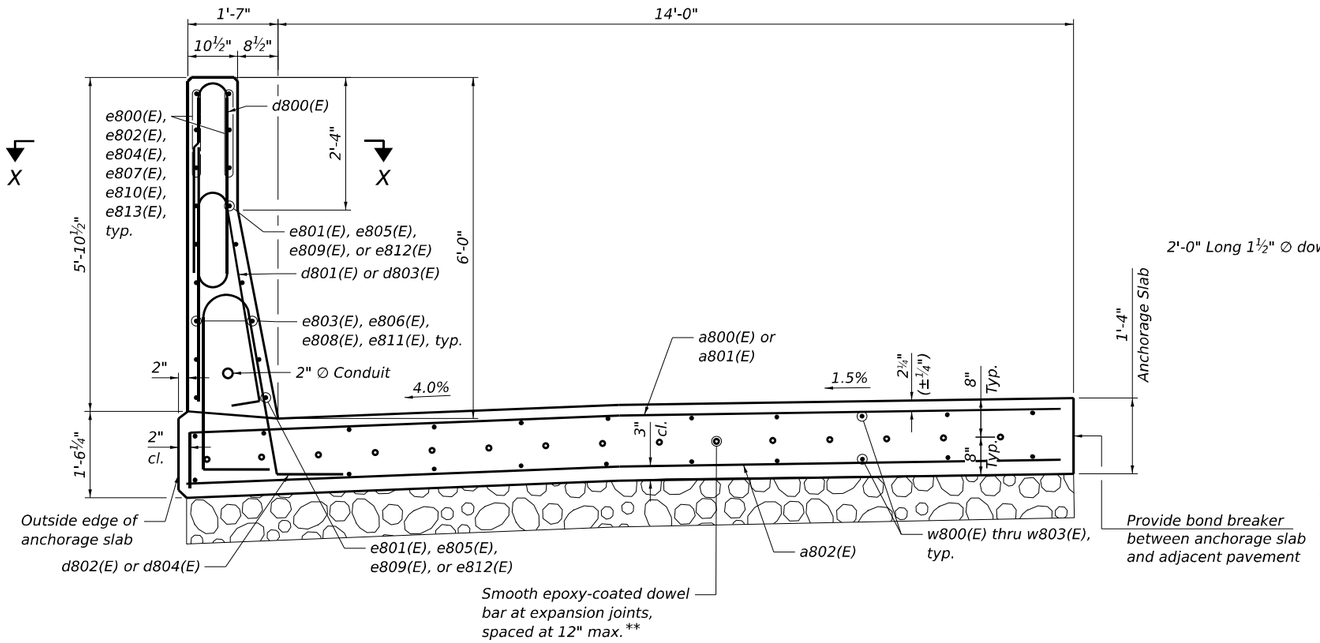

SECTION A-A

(Noise Wall Connection Detail not shown for clarity)

MINIMUM BAR LAPS

#5 bar = 3'-4"
#6 bar = 3'-7"
#8 bar = 4'-9"

NOTES:

1. The ⅛" aluminum sheet shall be ASTM B 209 alloy 3303-H14 and coated to minimize reaction with wet concrete. Cost included with Concrete Superstructure.
2. The polyurethane sealant shall be according to Article 1050.04 of the Std. Spec. and the color should be gray.
3. For Section X-X and Noise Abatement Wall connection details, see Sheet S12-10

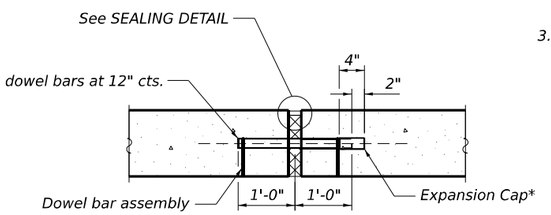

TRANSVERSE EXPANSION JOINT

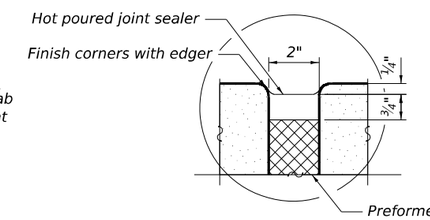

*Expansion caps shall be installed on the exposed end of each dowel bar once the header has been removed and the joint filler material has been installed.

**Cost included with Concrete Superstructure

SEALING DETAIL

BILL OF MATERIAL

Bar	No.	Size	Length	Shape
a800(E)	838	#6	16'-5"	
a801(E)	434	#7	16'-5"	
a802(E)	641	#6	15'-5"	
a803(E)	4	#6	16'-3"	
a804(E)	7	#7	17'-3"	
d800(E)	1285	#5	10'-0"	
d801(E)	434	#6	8'-7"	
d802(E)	851	#5	9'-0"	
d803(E)	851	#5	8'-1"	
d804(E)	434	#6	9'-0"	
d805(E)	5	#6	7'-7"	
e800(E)	72	#6	14'-8"	
e801(E)	6	#8	32'-10"	
e802(E)	18	#6	19'-6"	
e803(E)	30	#6	32'-1"	
e804(E)	48	#6	14'-9"	
e805(E)	18	#6	33'-1"	
e806(E)	90	#6	32'-4"	
e807(E)	18	#6	19'-8"	
e808(E)	30	#6	31'-8"	
e809(E)	6	#8	32'-6"	
e810(E)	18	#6	19'-2"	
e811(E)	30	#6	28'-11"	
e812(E)	6	#8	29'-9"	
e813(E)	18	#6	16'-4"	
e814(E)	12	#6	8'-11"	
w800(E)	72	#5	32'-5"	
w801(E)	216	#5	32'-2"	
w802(E)	72	#5	31'-6"	
w803(E)	72	#5	28'-9"	
Concrete Superstructure			Cu Yd	539.6
Protective Coat			Sq Yd	1229
Reinforcement Bars, Epoxy Coated			Pound	120,500
Noise Abatement Wall Anchor Rod Assembly			Each	53

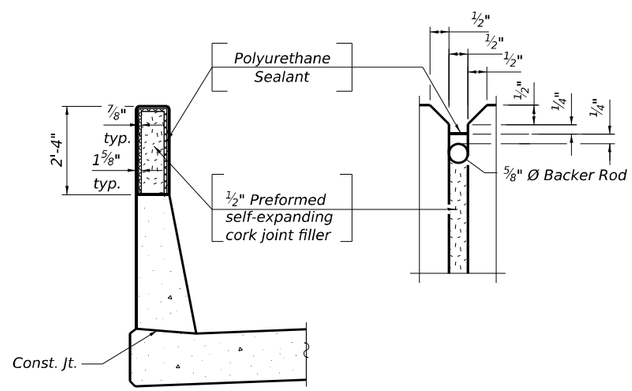

CORK PARAPET JOINT DETAILS

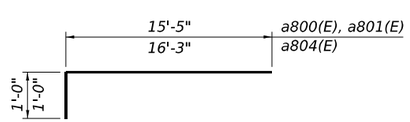

BARS a800(E), a801(E) and a804(E)

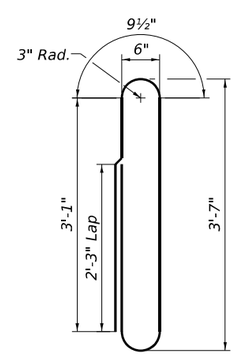

BAR d800(E)

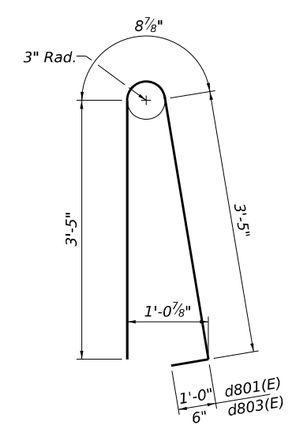

BARS d801(E) and d803(E)

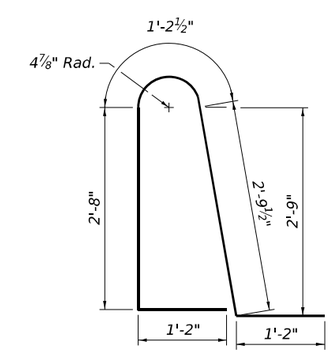

BARS d802(E) and d804(E)

(Back leg to extend 9½" into anchorage slab)

MODEL: BL_PR_I80 - Plan 3 [Sheet]
FILE NAME: pw://transystems-pw.bentley.com:TRANSYSCORP-PW1-HOSTED/Documents/Projects_2018/CH401/401180022/02-TranSystems/CAD/62R89/Sheets/23-Structural/Moment Slabs/D162R89-SHT-MOMENTSLAB17-STRUCT-9

HBM ENGINEERING GROUP, LLC	USER NAME = jana.issa	DESIGNED - EN	REVISED -
		DRAWN - EN	REVISED -
	PLOT SCALE =	CHECKED - SK, MAI	REVISED -
	PLOT DATE = 12/1/2023	DATE - 10/6/23	REVISED -

STATE OF ILLINOIS
DEPARTMENT OF TRANSPORTATION

ANCHORAGE SLAB 17
ANCHORAGE SLAB SECTIONS AND DETAILS

SCALE: | SHEET S12-9 OF S12-11 SHEETS | STA. | TO STA.

F.A.I. RTE.	SECTION	COUNTY	TOTAL SHEETS	SHEET NO.
I-80	FAI 80 22 BR	WILL	1201	848
		CONTRACT NO. 62R89		
	ILLINOIS	FED. AID PROJECT		

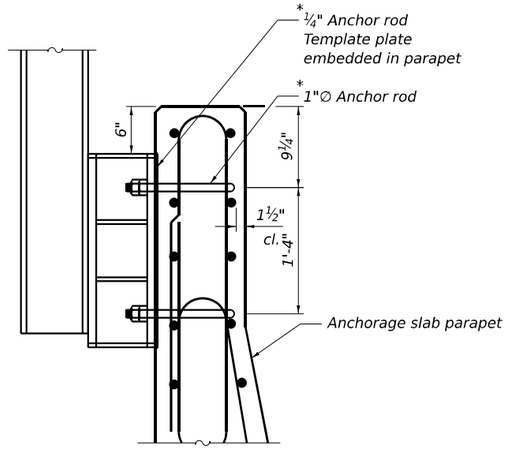

NOISE WALL CONNECTION DETAIL

*Cost of four anchor rods, template plate, and associated hardware included in the cost for one each of Noise Abatement Wall Anchor Rod Assembly.

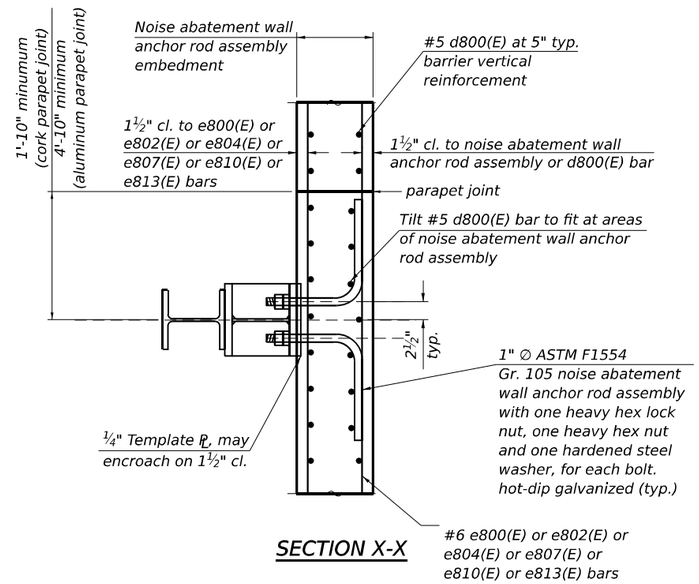

SECTION X-X

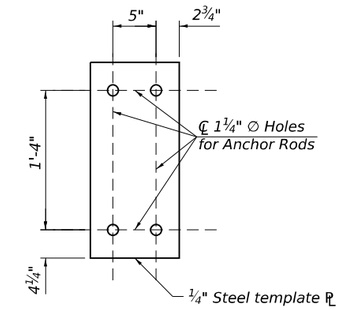

TEMPLATE PLATE FOR NOISE ABATEMENT WALL ANCHOR ROD ASSEMBLY

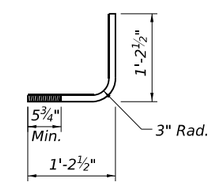

NOISE ABATEMENT WALL ANCHOR ROD ASSEMBLY

NOTE:

1. Post and post connection bracket details shown on anchorage slab plans for information only. See Noise Abatement Walls plans for full details.

MODEL: BL_PR_I80 - Plan 3 [Sheet]
FILE NAME: pw://transystems-pw.bentley.com:TRANSYSCORP-PW1-HOSTED/Documents/Projects_2018/CH401/401180022/02-TranSystems/CAD/62R89/Sheet/23-Structural/Moment Slabs/D162R89-SHT-MOMENTSLAB17-STRUCT-10

HBM ENGINEERING GROUP, LLC	USER NAME = jana.issa	DESIGNED - EN	REVISED -	STATE OF ILLINOIS DEPARTMENT OF TRANSPORTATION	ANCHORAGE SLAB 17 NOISE ABATEMENT WALL CONNECTION DETAILS	F.A.I. RTE.	SECTION	COUNTY	TOTAL SHEETS / SHEET NO.
		DRAWN - EN	REVISED -			I-80	FAI 80 22 BR	WILL	1201 / 849
	PLOT SCALE =	CHECKED - SK, MAI	REVISED -					CONTRACT NO. 62R89	
	PLOT DATE = 12/1/2023	DATE - 10/6/23	REVISED -		SCALE: SHEET S12-10 OF S12-11 SHEETS STA. TO STA.		ILLINOIS	FED. AID PROJECT	

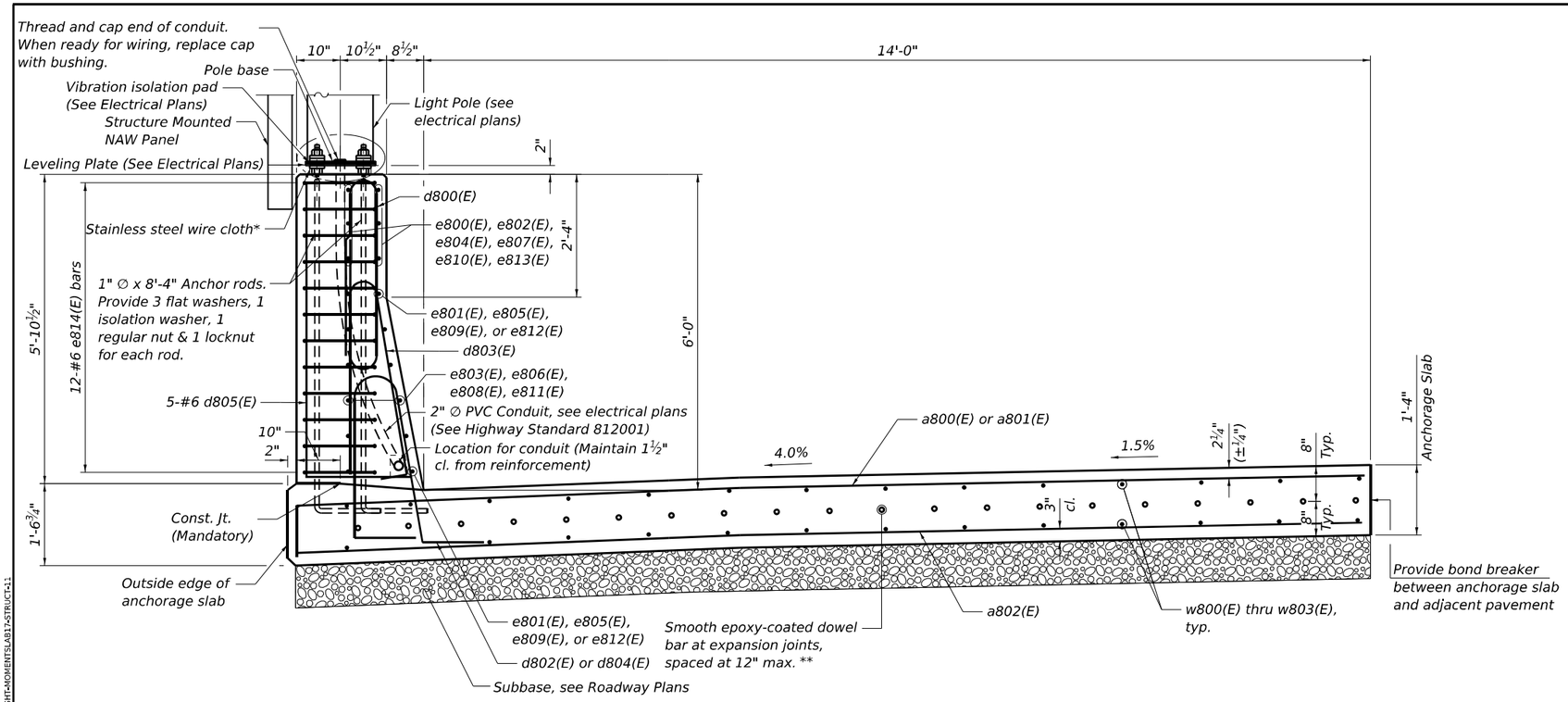

SECTION B-B

(Bump-Out Location - Sta. 601+16)

NOTES:

1. All dimensions are in inches unless otherwise shown.
2. The cost of anchor rods is included with Concrete Superstructure.
3. For quantities, see Sheet S12-9.
4. Anchor rods, nuts and washers shall be in accordance with standard specifications Articles 1070.02 and 1006.09.

*Screen wrapped around nuts and anchor rods between foundation and bottom of leveling plate. Provide 6" minimum overlap and wire-tie with matching wire.

**Cost included with Concrete Superstructure.

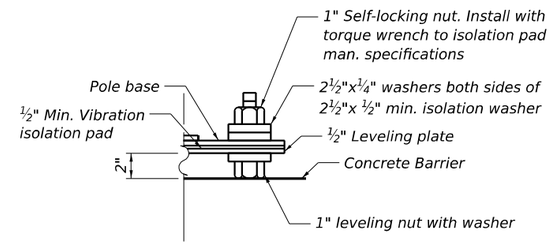

WASHER DETAIL

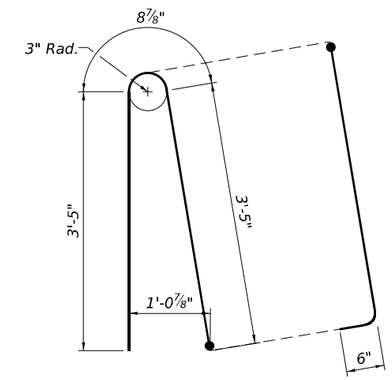

ALTERNATE BAR d803(E)

(For 72" constant slope parapet when conduit is present)

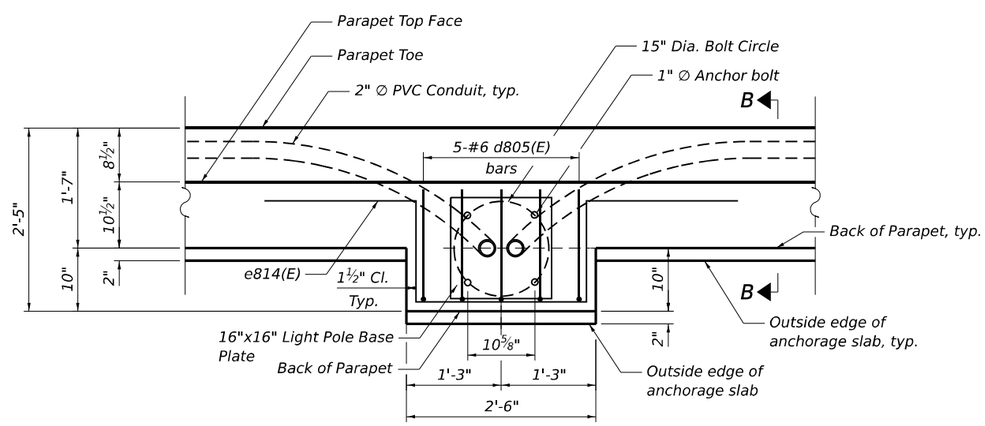

PLAN

(Noise Abatement Wall not shown for clarity)
(Bump-Out Location - Sta. 601+16)

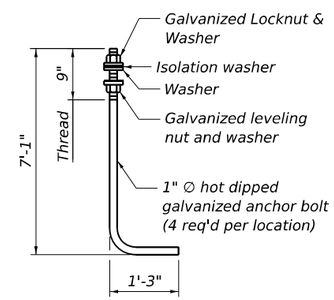

ANCHOR ROD

(ASTM F 1554 Grade 105)

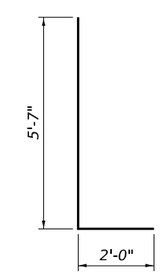

BAR d805(E)

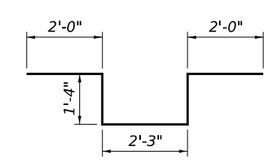

BAR e814(E)

MODEL: BL_PR_I80 - Plan 3 [Sheet]
FILE NAME: pw://transystems-pw.bentley.com:TRANSYSCORP-PW1-HOSTED/Documents/Projects_2018/CH401/401180022/02-TranSystems/CAD/62R89/Sheets/23-Structural/Moment Slabs/D162R89-SHT-MOMENTSLAB17-STRUCT-11

HBM ENGINEERING GROUP, LLC	USER NAME = jana.issa	DESIGNED - EN	REVISED -	STATE OF ILLINOIS DEPARTMENT OF TRANSPORTATION	ANCHORAGE SLAB 17 BUMP OUT ANCHORAGE SLAB SECTIONS AND DETAILS	F.A.I. RTE.	SECTION	COUNTY	TOTAL SHEETS / SHEET NO.
		DRAWN - EN	REVISED -			I-80	FAI 80 22 BR	WILL	1201 / 850
	PLOT SCALE =	CHECKED - SK, MAI	REVISED -					CONTRACT NO. 62R89	
	PLOT DATE = 12/1/2023	DATE - 10/6/23	REVISED -		SCALE: SHEET S12-11 OF S12-11 SHEETS STA. TO STA.		ILLINOIS	FED. AID PROJECT	

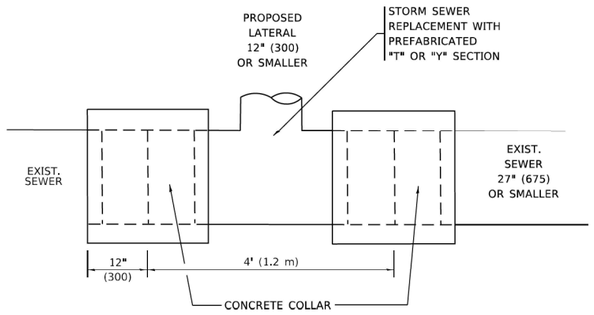

DETAIL "A"

LATERAL CONNECTION TO EXISTING SEWER
OF 27" (675) OR SMALLER

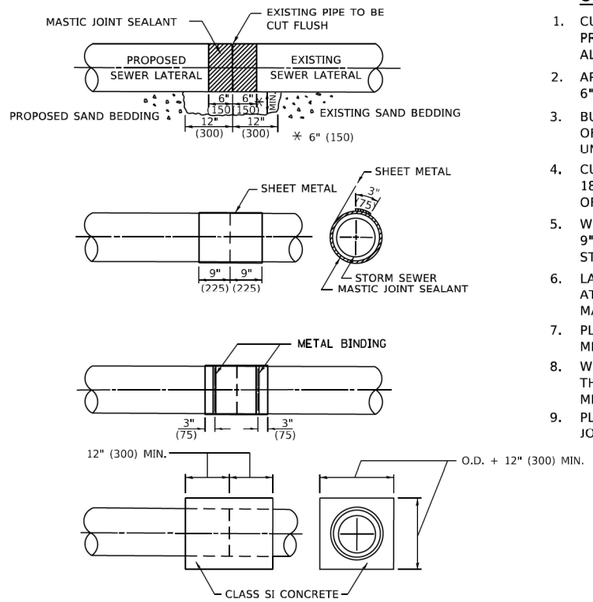

DETAIL "B"

CLASS SI CONCRETE COLLAR

CONSTRUCTION SEQUENCE

1. CUT THE EXISTING END OF THE PIPE SO AS TO PRESENT A FLUSH BUTT JOINT. BRUSH AND CLEAN ALL PIPES.
2. APPLY THE MASTIC JOINT SEALANT TO THE FIRST 6" (150) OF EACH PIPE.
3. BUTT THE PIPES TOGETHER LEAVING A MINIMUM OF 12' x 6' (300 x 150) DEEP EXCAVATION UNDER AND AROUND EACH PIPE END.
4. CUT A PIECE OF SHEET METAL GAGE NO. 19 1.1 (0.0418) 18" (450) WIDE BY THE OUTSIDE CIRCUMFERANCE OF THE PIPE PLUS 3" (75) LONG.
5. WRAP THE SHEET METAL AROUND THE PIPES, 9" (225) ON EACH SIDE OF THE JOINT, STARTING AT THE TOP OF THE PIPE.
6. LAP THE SHEET METAL AT LEAST 3" (75) AT THE TOP OF THE PIPE AND PLACE THE MASTIC JOINT SEALANT BETWEEN THE LAP.
7. PLACE TWO METAL BANDS AROUND THE SHEET METAL AND TIGHTEN.
8. WIPE OFF ANY EXCESS MASTIC JOINT SEALANT THAT OOZES OUT FROM BETWEEN THE SHEET METAL AND THE PIPES.
9. PLACE CLASS SI CONCRETE AROUND THE JOINT.

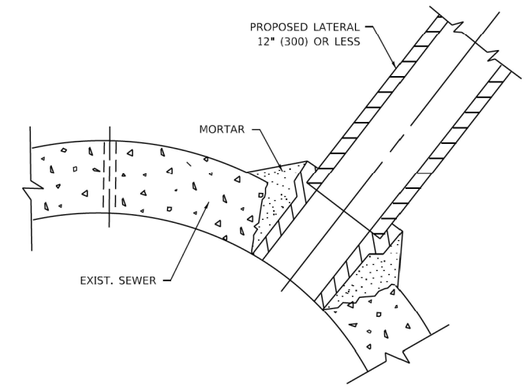

DETAIL "C"

PROPOSED LATERAL
CONNECTION TO EXISTING SEWER
OF 30" (750) OR LARGER

NOTES:

MATERIAL

MATERIAL USED FOR THE TEE OR WYE SECTION SHALL BE COMPATIBLE WITH THE EXISTING STORM SEWER OR THE PROPOSED STORM SEWER.

CONSTRUCTION METHODS

I. THIS WORK SHALL BE CONSTRUCTED IN CONFORMANCE WITH THE APPLICABLE PORTIONS OF SECTION 550 OF THE STANDARD SPECIFICATIONS.

II. CONNECTION TO AN EXISTING STORM SEWER SHALL BE BY EITHER OF THE FOLLOWING METHODS:
A) PROPOSED STORM SEWER CONNECTION TO EXISTING SEWER OF 27" (675) OR SMALLER SEE DETAIL "A" AND "B".
B) PROPOSED STORM SEWER CONNECTION TO EXISTING SEWER OF 30" (750) OR LARGER SEE DETAIL "C".

IF THE EXISTING SEWER PIPE IS CRACKED, BROKEN OR OTHERWISE DAMAGED BY THE CONTRACTOR IN MAKING THE CIRCULAR OPENING, THE CONTRACTOR SHALL REPLACE THAT SECTION OF PIPE WITH PIPE EQUAL AND SIMILAR IN ALL RESPECTS TO THE PIPE IN THE EXISTING SEWER, IN A CAREFUL WORKMANLIKE MANNER, WITHOUT EXTRA COMPENSATION.

GENERAL

1. CARE MUST BE TAKEN TO PREVENT DEBRIS FROM ENTERING THE SEWER. ALL DEBRIS WHICH ENTERS THE SEWER MUST BE REMOVED. THE SEWER MUST BE LEFT CLEAN AND UNOBSTRUCTED UPON COMPLETION OF THE CONTRACT.
2. CARE MUST BE TAKEN TO PREVENT ANY PART OF THE NEW PIPE CONNECTION FROM PROJECTING INTO THE EXISTING SEWER.

BASIS OF PAYMENT

1. TEE OR WYE CONNECTIONS SHALL BE PAID FOR AT THE CONTRACT UNIT PRICE EACH FOR STORM SEWER TEE OR WYE OF THE TYPE AND SIZE SPECIFIED IN THE PLANS, THIS PRICE SHALL INCLUDE ALL EXCAVATION OF THE TRENCH, REMOVAL OF THE EXISTING STORM SEWER, FURNISHING AND INSTALLING THE SPECIFIED TEE OR WYE SECTION, FURNISHING AND INSTALLING THE REQUIRED CONCRETE COLLAR, AND ALL OTHER MATERIAL NECESSARY TO COMPLETE THIS WORK AS SHOWN AND SPECIFIED.
2. REMOVAL AND REINSTALLATION OF EXISTING STORM SEWER ADJACENT TO THE PROPOSED TEE OR WYE SECTION, FOR THE PURPOSE OF FACILITATING THE INSTALLATION OF THE TEE OR WYE SECTION, WILL NOT BE PAID FOR SEPARATELY BUT SHALL BE INCLUDED IN THE UNIT PRICE BID FOR THE WORK.
3. TRENCH BACKFILL, EXCAVATION IN ROCK AND REMOVAL AND REPLACEMENT OF UNSUITABLE MATERIAL BELOW PLAN BEDDING GRADE WILL BE PAID FOR SEPARATELY.
4. CONCRETE COLLAR FOR CONNECTING A PROPOSED STORM SEWER TO AN EXISTING STORM SEWER WILL NOT BE PAID PAID FOR SEPARATELY BUT SHALL BE INCLUDED IN THE COST OF THE PROPOSED STORM SEWER.

* ALL DIMENSIONS ARE IN INCHES (MILLIMETERS) UNLESS OTHERWISE SHOWN.

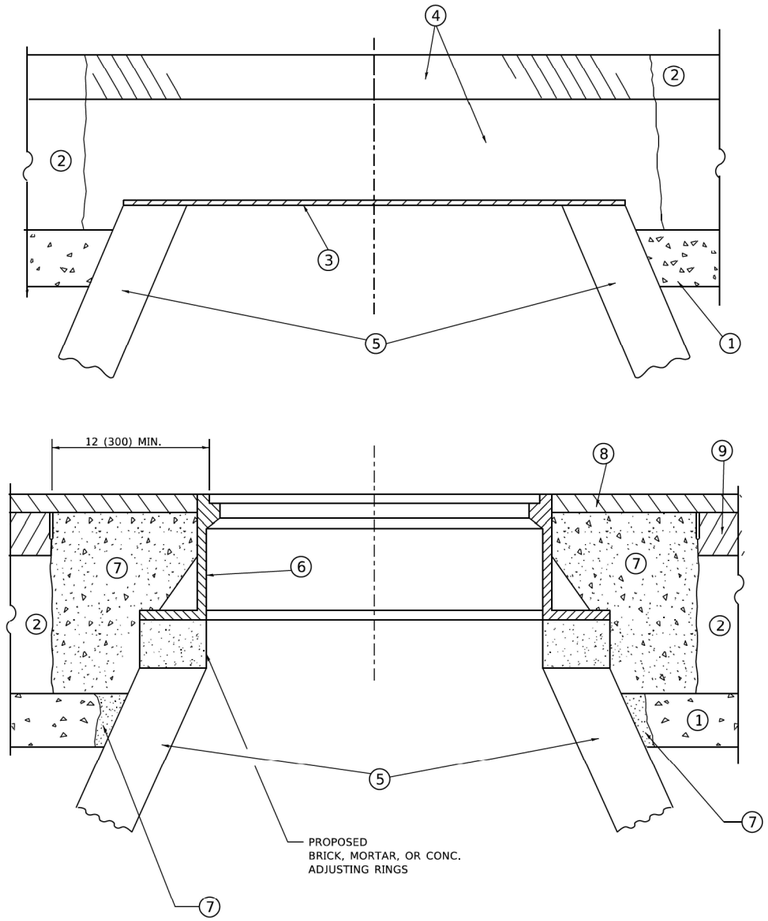

DETAILS FOR FRAMES AND LIDS ADJUSTMENT WITH MILLING

NOTES

1. EXISTING BROKEN FRAMES AND LIDS SHALL BE REMOVED AND DISPOSED OF BY THE CONTRACTOR AND SHALL BE REPLACED AS DIRECTED BY THE ENGINEER. REPLACEMENT FRAMES AND LIDS WILL BE PAID FOR IN ACCORDANCE WITH ARTICLE 109.04 OF THE STANDARD SPECIFICATIONS UNLESS A SEPARATE PAY ITEM HAS BEEN PROVIDED.

2. IF THE EXISTING LIDS ARE OPEN, THE FRAME WILL BE ADJUSTED TO THE ELEVATION OF THE MILLED PAVEMENT SURFACE PRIOR TO THE MILLING OPERATION. THE FRAME WILL NOT BE REMOVED AND COVERED BY THE METAL PLATE.

3. CITY OF CHICAGO CASTINGS ARE THE PROPERTY OF THE CITY AND THE CONTRACTOR SHALL NOTIFY THE CITY FOR REMOVAL AND DISPOSITION OF THE CASTINGS.

4. THE METAL PLATE USED TO COVER THE STRUCTURE SHALL REMAIN THE PROPERTY OF THE CONTRACTOR.

CONSTRUCTION PROCEDURES

STAGE 1 (BEFORE PAVEMENT MILLING)

A) REMOVE A MINIMUM OF 12 (300) OF THE PAVEMENT FROM AROUND THE STRUCTURE.

B) REMOVE THE EXISTING FRAME AND LID FROM THE STRUCTURE.

C) COVER THE STRUCTURE OPENING WITH A 36 (900) DIAMETER METAL PLATE.

D) BACKFILL WITH CRUSHED STONE AND HMA SURFACE MIX APPROVED BY THE ENGINEER. (MIN. 1 1/2 (40) HMA TO REMAIN AFTER MILLING).

STAGE 2 (AFTER PAVEMENT MILLING)

A) REMOVE THE HMA SURFACE MIX AND CRUSHED STONE.

B) INSTALL THE FRAME AND LID; ADJUST THE FRAME TO ITS FINAL SURFACE ELEVATION.

C) THE SURROUNDING SPACE SHALL BE FILLED WITH CLASS*PP-1 CONCRETE TO THE ELEVATION OF THE SURFACE OF THE EXISTING BASE COURSE OR THE BINDER COURSE.

*UNLESS OTHERWISE SPECIFIED IN THE PLANS.

THE PROCEDURE EXPLAINED ABOVE SHALL CONFORM TO THE APPLICABLE PORTIONS OF SECTIONS 353, 406, 602, AND 603 OF THE STANDARD SPECIFICATIONS EXCEPT THAT "THE CONTRACTOR SHALL ADJUST THE STRUCTURES TO THE FINISHED PAVEMENT ELEVATION NO MORE THAN 5 CALENDAR DAYS PRIOR TO PLACEMENT OF THE FINAL LIFT OF SURFACE UNLESS APPROVED BY THE ENGINEER."

LEGEND

1. SUB-BASE GRANULAR MATERIAL
2. EXISTING PAVEMENT
3. 36 (900) DIAMETER METAL PLATE
4. PROPOSED CRUSHED STONE AND HMA SURFACE MIX
5. EXISTING STRUCTURE
6. FRAME AND LID (SEE NOTES)
7. CLASS*PP-1 CONCRETE
8. PROPOSED HMA SURFACE COURSE
9. PROPOSED HMA BINDER COURSE

LOCATION OF STRUCTURES

THE CONTRACTOR WILL BE REQUIRED TO KEEP A RECORD OF THE LOCATIONS OF THE BURIED STRUCTURES ACCORDING TO THE STATION AND DISTANCE LEFT OR RIGHT OF THE CENTERLINE OF PAVEMENT. UPON COMPLETION OF THE WORK, THE CONTRACTOR WILL DELIVER THE RECORD TO THE ENGINEER.

BASIS OF PAYMENT

1. REMOVING FRAMES AND LIDS ON DRAINAGE AND UTILITY STRUCTURES IN THE PAVEMENT PRIOR TO MILLING, AND ADJUSTING TO FINAL GRADE PRIOR TO PLACING THE SURFACE COURSE, WILL BE PAID FOR AT THE CONTRACT UNIT PRICE EACH FOR "FRAMES AND LIDS TO BE ADJUSTED (SPECIAL)."

2. THIS WORK WILL NOT BE PAID FOR WHEN DRAINAGE AND UTILITY STRUCTURES ARE SPECIFIED FOR PAYMENT AS STRUCTURE RECONSTRUCTION.

3. NEW FRAMES AND LIDS, WHEN SPECIFIED, WILL BE PAID FOR SEPARATELY.

4. WHEN STRUCTURES ARE TO BE ADJUSTED OR RECONSTRUCTED, THE LOWERING AND RAISING OF THE FRAMES AND LIDS WILL NOT BE PAID FOR SEPARATELY BUT WILL BE INCLUDED IN THE COST OF THE CORRESPONDING PAY ITEM.

ALL DIMENSIONS ARE IN INCHES (MILLIMETERS) UNLESS OTHERWISE SHOWN

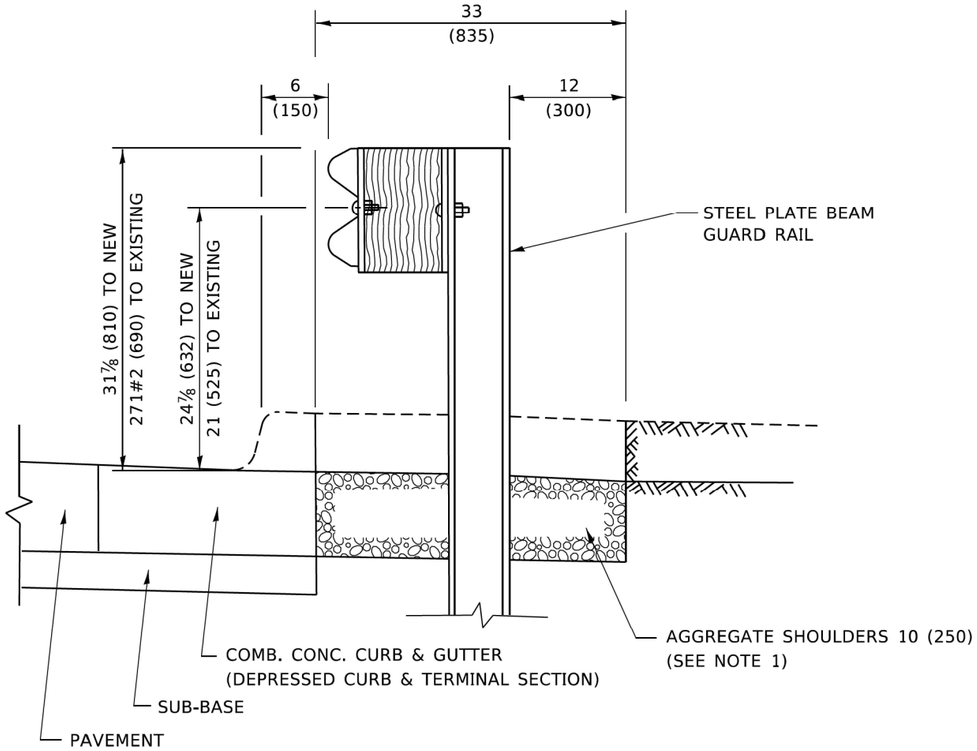

SECTION A–A

NOTES:

1. THE AGGREGATE SHOULDER, 10 (250) OR HMA SHOULDER, 6 (150) (IF REQUIRED) SHALL EXTEND UNDER THE TRAFFIC BARRIER TERMINAL.
2. "EXISTING" GUARDRAIL REFERS TO CONNECTING TERMINAL SECTION TO GUARD RAILING PRIOR TO THE MIDWEST GUARDRAIL SYSTEM.
3. THE CONTRACTOR SHALL VERIFY THE TYPE/HEIGHT OF GUARDRAIL IN-PLACE BEFORE ORDERING THE NEW TERMINAL SECTION. COST INCLUDED WITH THE COST OF THE TERMINAL. THE EXISTING GUARDRAIL HEIGHT SHALL TRANSISTION TO MATCH THE NEW TERMINAL END SECTION AND SHALL BE PAID FOR AS VERTICAL ADJUSTMENT OF EXISTING GUADRAIL.

DETAILS FOR STEEL PLATE BEAM GUARD RAIL ADJACENT TO CURB AND GUTTER [FOR ROADWAY SPEED 35 MPH (60 kmh) TO 45 MPH (70 kmh)]

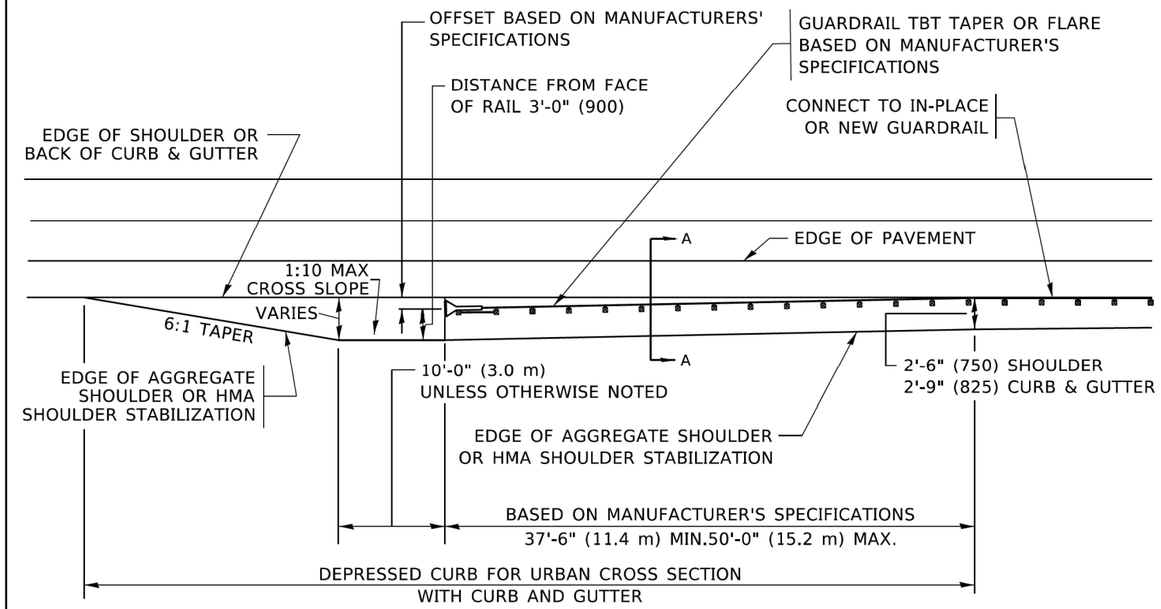

DEPRESSED CURB AND GUTTER AND SHOULDER TREATMENT AT TBT TY. 1 SPL.

AGGREGATE SHOULDER, 10 (250) WILL BE PAID ACCORDING TO SECTION 481.

HMA SHOULDERS 6 (150) (IF REQUIRED) WILL BE PAID ACCORDING TO SECTION 482.

COMB. CONC. C&G, STEEL PLATE BEAM GUARD RAIL AND TRAFFIC BARRIER TERMINAL, OF THE TYPE SPECIFIED WILL BE PAID FOR SEPARATELY.

TBT = TRAFFIC BARRIER TERMINAL

ALL DIMENSIONS ARE IN INCHES (MILLIMETERS) UNLESS OTHERWISE SHOWN.

MODEL: Default
FILE NAME: pw:\\ildot-pw.bentley.com:PWIDOT\Documents\IDOT Offices\District 1\Projects\DistStd22x34\CADData\CADsheets\bd34.dgn

TRANSYSTEMS

USER NAME = Lawrence.DeManche	DESIGNED - M. DE YONG	REVISED - R. BORO 09-14-2009	STATE OF ILLINOIS DEPARTMENT OF TRANSPORTATION	DETAILS FOR DEPRESSED CURB & GUTTER AND SHOULDER TREATMENT AT TBT TY. 1 SPL.	
	DRAWN -	REVISED - R. BORO 08-06-2012			
PLOT SCALE = 100.0000 ' / in.	CHECKED -	REVISED - R. BORO 05-08-2015			
PLOT DATE = 11/18/2022	DATE - 09-22-90	REVISED - K. SMITH 11-18-22		SCALE: NONE	SHEET 3 OF 22 SHEETS STA. TO STA.

F.A. RTE.	SECTION	COUNTY	TOTAL SHEETS	SHEET NO.
			1201	853
BD600–10 (BD–34)		CONTRACT NO.62R89		
	ILLINOIS	FED. AID PROJECT		

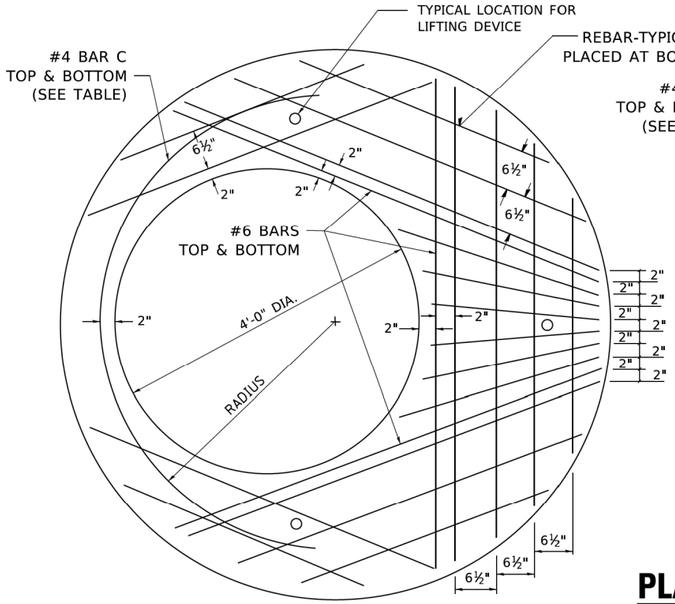

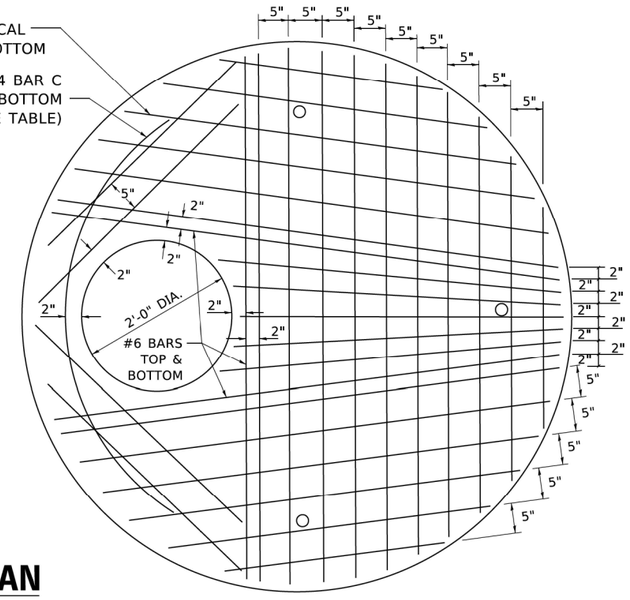

PLAN

SHOWING REBAR REINFORCEMENT

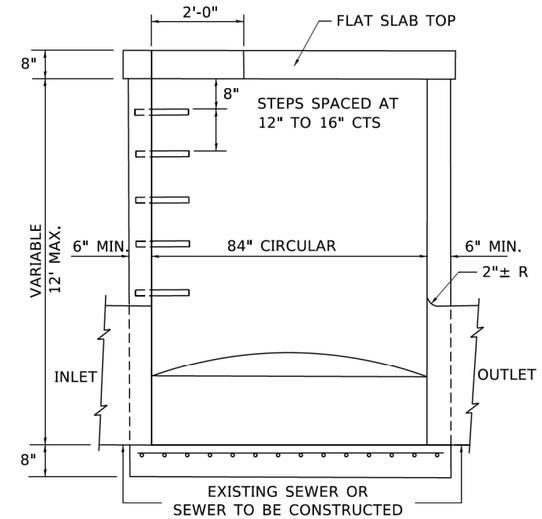

ELEVATION

GENERAL NOTES

ALTERNATE MATERIAL FOR THE WALLS MAY BE CONCRETE MASONRY UNITS, PRECAST REINFORCED CONCRETE SECTIONS OR CAST-IN-PLACE CONCRETE. THE CAST IRON STEPS AS DETAILED HEREON ARE TYPICAL. STEPS OF OTHER DESIGN AND MATERIAL THAT CONFORM TO THE MINIMUM REQUIREMENTS OF THE STEPS SHOWN MAY BE USED WHEN APPROVED BY THE ENGINEER.

CAST IRON STEPS SHALL BE GRAY IRON CONFORMING TO THE REQUIREMENTS OF ARTICLE 1006.14 OF THE STANDARD SPECIFICATIONS.

STEPS SHALL BE EMBEDDED INTO THE WALL A MINIMUM OF THREE (3) INCHES. STEPS SHALL NOT BE EXTENDED ON THE OUTSIDE.

STEPS SHALL BE OMITTED FOR WORK IN COOK COUNTY WHEN THE DEPTH OF THE MANHOLE IS TEN (10') OR LESS.

IN ADDITION TO THE REQUIREMENTS OF ARTICLE 612.13 OF THE STANDARD SPECIFICATIONS, THE CONTRACT UNIT PRICE FOR MANHOLES, TYPE A, 7'-DIAMETER SHALL INCLUDE THE SAND CUSHION WHEN REQUIRED, FURNISHING AND INSTALLING STEPS WHEN REQUIRED, FURNISHING AND COMPACTING THE SPECIFIED BACKFILL MATERIAL, AND FURNISHING AND INSTALLING FLAT SLAB TOP.

PRECAST FLAT SLAB TOP SHALL CONFORM TO ARTICLES 505.01 THRU 505.05 OF THE STANDARD SPECIFICATIONS EXCEPT THAT THE CONCRETE STRENGTH SHALL BE 4,000 PSI AFTER 28 DAYS. REINFORCEMENT BARS AND WELDED WIRE FABRIC SHALL CONFORM TO THE REQUIREMENTS OF ARTICLE 1006.10. ONLY GRADE 60 REINFORCEMENT BARS WILL BE PERMITTED.

BOTTOM SLAB SHALL BE REINFORCED BY EITHER REINFORCEMENT BARS OR WELDED WIRE FABRIC. THE MINIMUM REINFORCEMENT SHALL BE 0.46 SQUARE INCH PER LINEAR FOOT IN BOTH DIRECTIONS.

JOINT CONFIGURATION AND DIMENSIONS OF FLAT SLAB TOP SHALL MATCH AND FIT THE RISER JOINT DETAIL.

LIFTING DEVICES SHALL BE APPROVED BY THE ENGINEER.

SEC. A–A CAST IRON STEPS

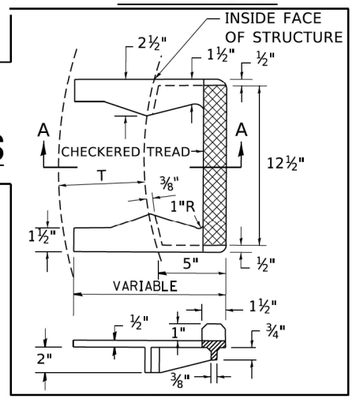

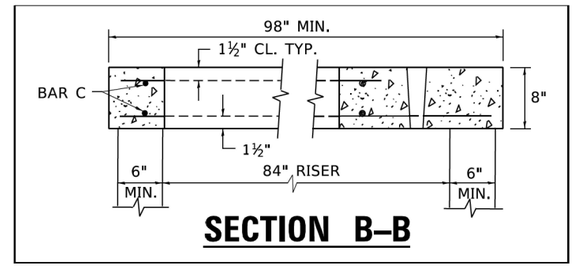

SECTION B–B

ALTERNATE MATERIALS FOR RISERS	T (MIN.)
CONCRETE MASONRY UNITS	5"
PRECAST REINFORCED CONCRETE SECTIONS	4"
CAST-IN-PLACE CONCRETE	6"

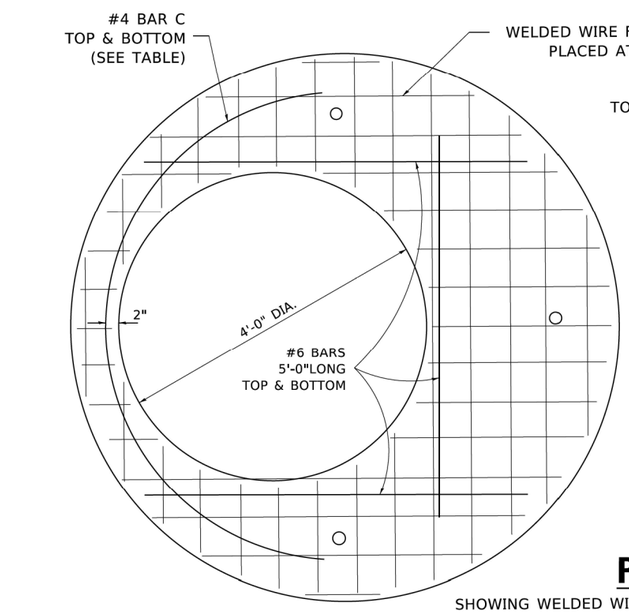

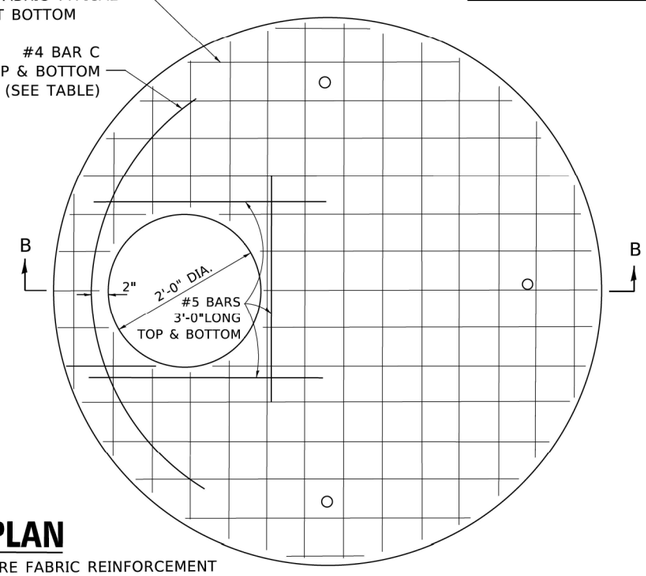

PLAN

SHOWING WELDED WIRE FABRIC REINFORCEMENT

NOTE:

THIS STRUCTURE SHOULD BE USED WITH PIPES SIZE 54" DIA. OR SMALLER.

TABLE

DIAMETER OF OPENING	REINFORCEMENT "As" WWF OR EACH DIRECTION	BAR SIZE	BAR C		
			SIZE	LENGTH	RADIUS
2'-0"	1.06 SQ.IN./LIN.FT.	#6	#4	6'-0"	38"
4'-0"	0.82 SQ.IN./LIN.FT.	#6	#4	9'-0"	38"

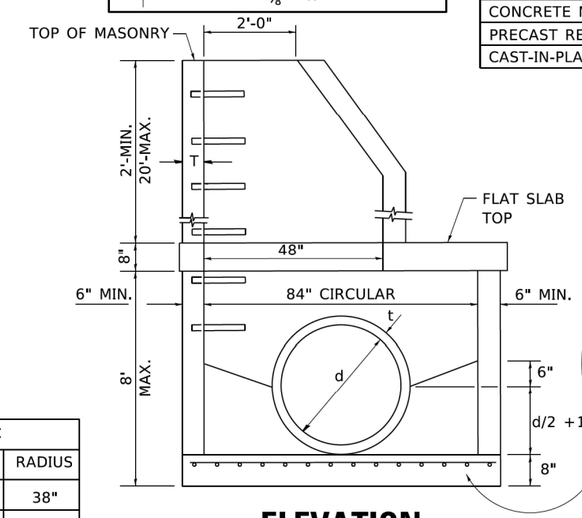

ELEVATION

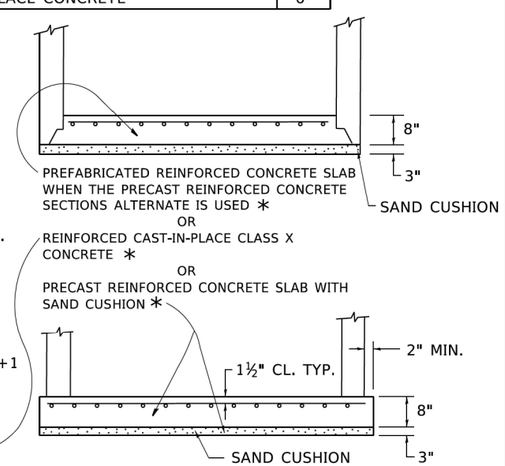

MODEL: Default
FILE NAME: pw:\\planroom.dot.illinois.gov:PWIDOT\Documents\IDOT Offices\District 1\Projects\DistSd22x34\CADData\CADsheets\bd37.dgn

TRANSYSTEMS	USER NAME = footemj	DESIGNED -	REVISED -	STATE OF ILLINOIS DEPARTMENT OF TRANSPORTATION	MANHOLE TYPE A 7 FOOT DIAMETER
		DRAWN -	REVISED -		
	PLOT SCALE = 50.0000 ' / in.	CHECKED -	REVISED -		
	PLOT DATE = 3/27/2019	DATE - 10-18-02	REVISED -		SCALE: NONE SHEET 4 OF 22 SHEETS STA. TO STA.

F.A. RTE.	SECTION	COUNTY	TOTAL SHEETS	SHEET NO.
			1201	854
BD600–11	(BD–37)	CONTRACT NO.62R89		
		ILLINOIS	FED. AID PROJECT	

bd37.dgn 3/27/2019 8:10:22 AM User=footemj

FRAME EXTENSION INTO PAVEMENT	INNER HOOP REINFORCEMENT DIAMETER	SEMI CIRCULAR FORM DIAMETER	OUTER HOOP REINFORCEMENT DIAMETER
UP TO 8" (200)	3'-6" (1.1 m)	4'-0" (1.2 m)	5'-0" (1.5 m)
> 8" (200) TO 14" (360)	4'-0" (1.2 m)	4'-6" (1.4 m)	5'-0" (1.5 m)

GENERAL NOTES

1. TRANSVERSE JOINTS MAY BE MOVED TO ACCOMMODATE ROUNDOUT, EDGE OF CIRCULAR JOINT SHALL BE MINIMUM 12" (300) FROM TRANSVERSE JOINT. RELOCATED TRANSVERSE JOINT SHALL BE CONTINUOUS FROM EDGE OF PAVEMENT TO EDGE OF PAVEMENT.
2. SEMI-CIRCULAR FORM SHALL BE REMOVED PRIOR TO DRILL AND GROUT OF TIE BARS.
3. ALL REINFORCED BARS SHALL BE EPOXY COATED.
4. DRILL AND GROUT IS PREFERRED, HOWEVER TIE BARS CAN BE POURED IN PLACE IF CLEARANCE IS PROVIDED TO OUTER EDGE OF FRAME. MINIMUM 2" (50) CLEARANCE.
5. WOOD SHIMS SHALL BE USED TO ADJUST ALL FRAMES. AFTER ADJUSTING MORTAR HAS CURED, THE WOOD SHIMS SHALL BE REMOVED AND THE VOIDS UNDER THE FRAMES FILLED WITH NON SHRINK GROUT.
6. HOOP REINFORCEMENT SHALL BE ONE PIECE CONSTRUCTION.
7. CIRCULAR FRAMES AND GRATES MAY BE SUBSTITUTED.
8. CURB DOWELS MUST BE PLACED LEVEL & TRUE TO ALLOW CONTRACTION MOVEMENT.

BASIS OF PAYMENT

1. THE ROUNDOUT AND ADDED REINFORCEMENT WILL NOT BE PAID SEPARATELY, BUT SHALL BE INCLUDED IN THE CONTRACT UNIT PRICE FOR THE PAVEMENT.

DESIGNER NOTE
THIS DETAIL IS TO BE USED WHEN THE GUTTER FLAG IS LESS THAN 24"

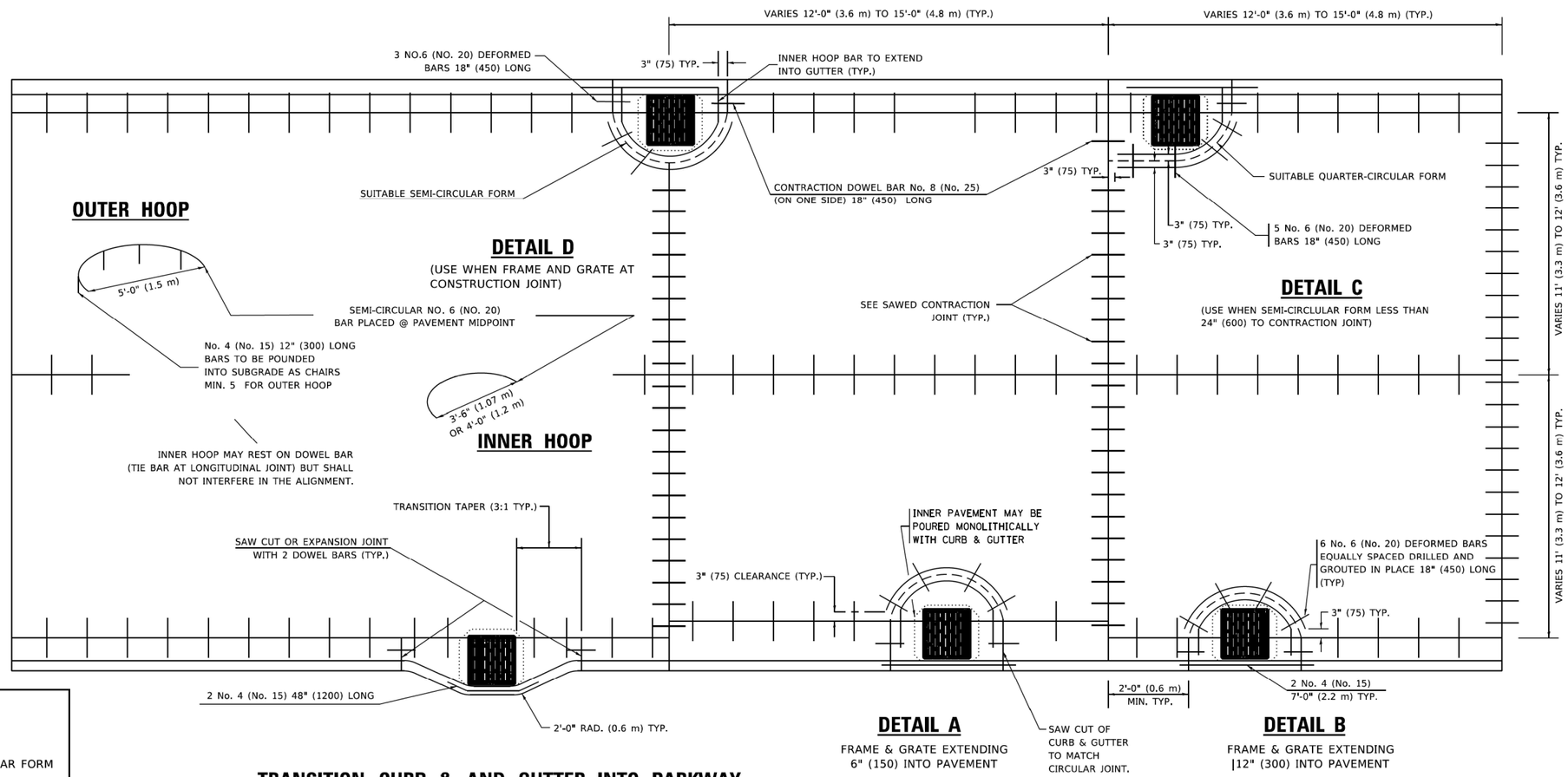

LEGEND

..... CASTING

– – – – – – SUITABLE SEMI-CIRCULAR FORM

TRANSITION CURB & AND GUTTER INTO PARKWAY
(PREFERRED BECAUSE PAVING OF MAINLINE NOT AFFECTED.)

ALL DIMENSIONS ARE IN INCHES (MILLIMETERS) UNLESS OTHERWISE NOTED

MODEL: Default
FILE NAME: pw:\\ildot-pw.bentley.com:PWIDOT\Documents\IDOT Offices\District 1\Projects\DistStd22x34\CADData\CADsheets\bd48.dgn

TRANSYSTEMS

USER NAME = Lawrence.DeManche	DESIGNED - A. ABBAS	REVISED - T. MATOUSEK 10-02-00	
	DRAWN - TOM MATOUSEK	REVISED - T. MATOUSEK 04-25-02	
PLOT SCALE = 100.0000 ' / in.	CHECKED - A. ABBAS	REVISED - P. LAFLEUR 08-27-02	
PLOT DATE = 11/18/2022	DATE - 01-04-99	REVISED - K. SMITH 11-18-22	

STATE OF ILLINOIS
DEPARTMENT OF TRANSPORTATION

PCC PAVEMENT ROUNDOUTS AT CURB AND GUTTER

SCALE: NONE | SHEET 5 OF 22 SHEETS | STA. TO STA.

F.A. RTE.	SECTION	COUNTY	TOTAL SHEETS	SHEET NO.
			1201	855
BD-48		CONTRACT NO.62R89		
	ILLINOIS	FED. AID PROJECT		

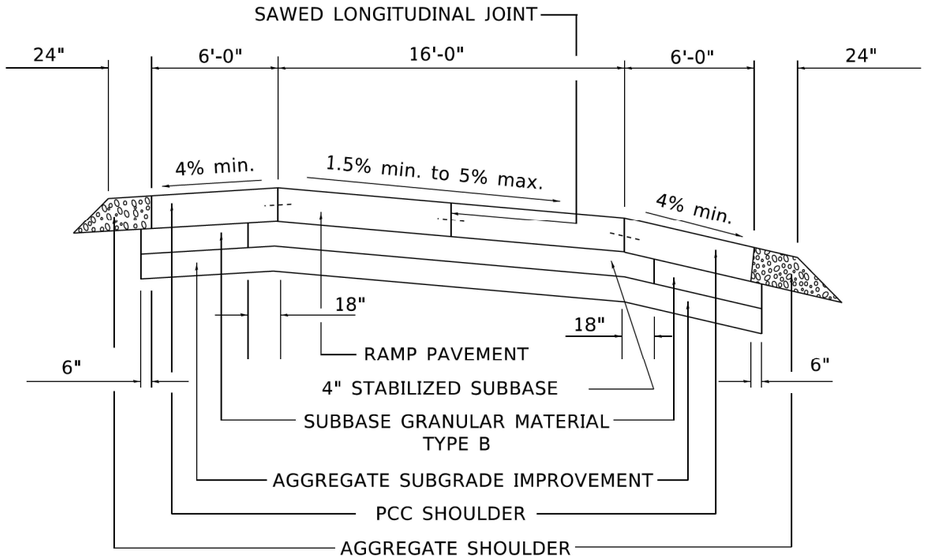

SECTION

NOTES:

1. CENTERLINE JOINT REMAINS IN THE CENTER WHEN RAMP TRANSITIONS TO TWO (2) RAMPS AT 12'.
2. ALL BARS TO BE EPOXY COATED.

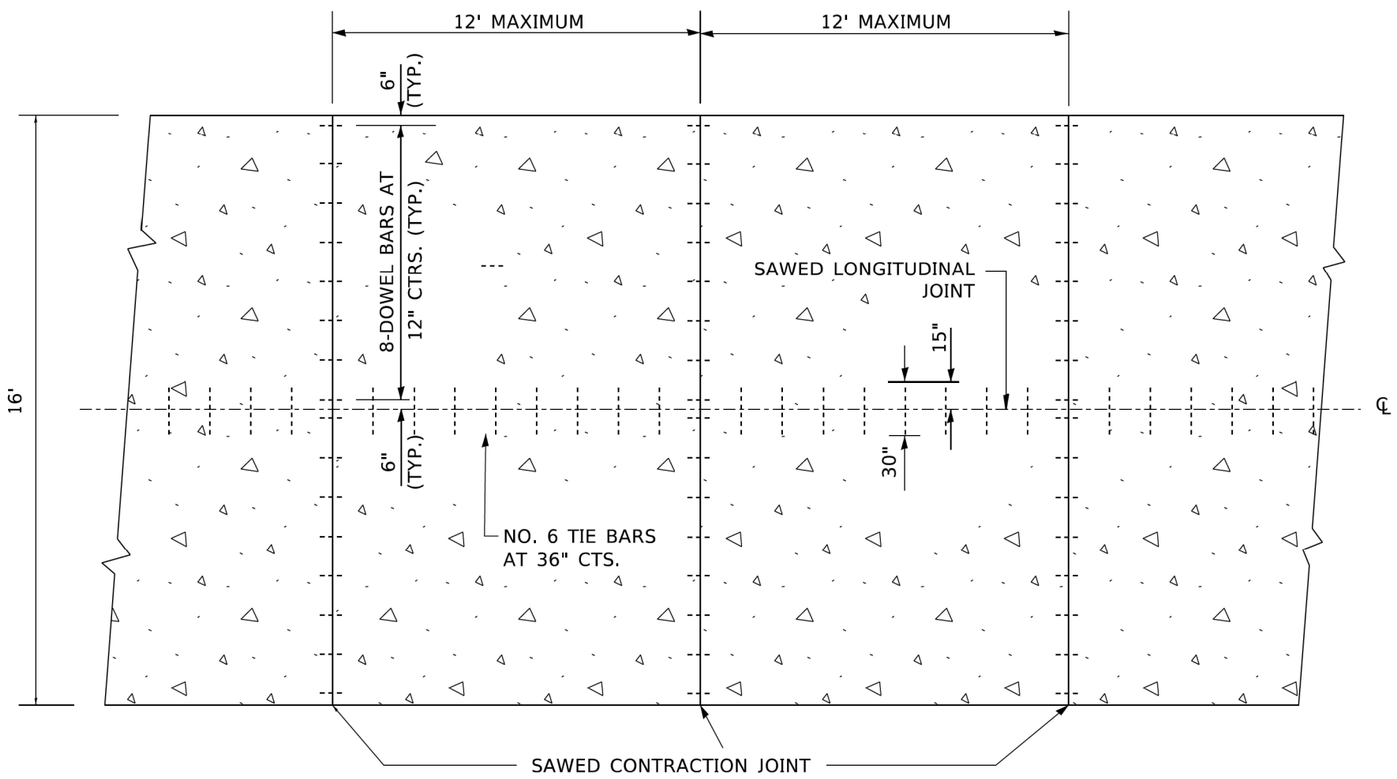

PLAN

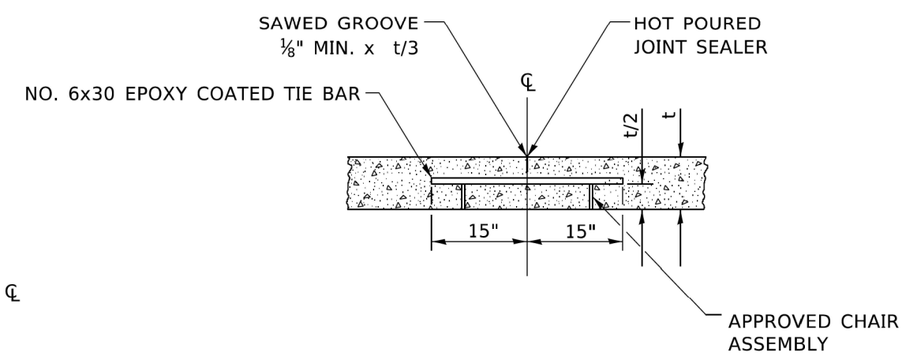

SAWED LONGITUDINAL JOINT

ALL DIMENSIONS ARE IN INCHES UNLESS OTHERWISE NOTED

MODEL: Default
FILE NAME: pw:\\ildot-pw.bentley.com:PWIDOT\Documents\IDOT Offices\District 1\Project\DistStd22x34\CADdata\CADsheets\bd49.dgn

TRANSYSTEMS

USER NAME = Lawrence.DeManche	DESIGNED -	REVISED -TOM MATOUSEK 08/19/10	
	DRAWN - TOM MATOUSEK	REVISED - K. SMITH 11-18-22	
PLOT SCALE = 100.0000 ' / in.	CHECKED - A. ABBAS	REVISED -	
PLOT DATE = 11/18/2022	DATE - 10-18-02	REVISED -	

STATE OF ILLINOIS
DEPARTMENT OF TRANSPORTATION

DETAIL FOR CENTERLINE SAW CUT 16' AND VARIABLE JOINTED PCC PAVEMENT FOR RAMPS

SCALE: NONE | SHEET 6 OF 22 SHEETS | STA. TO STA.

F.A. RTE.	SECTION	COUNTY	TOTAL SHEETS	SHEET NO.
			1201	856
	BD-49	CONTRACT NO.62R89		
		ILLINOIS FED. AID PROJECT		

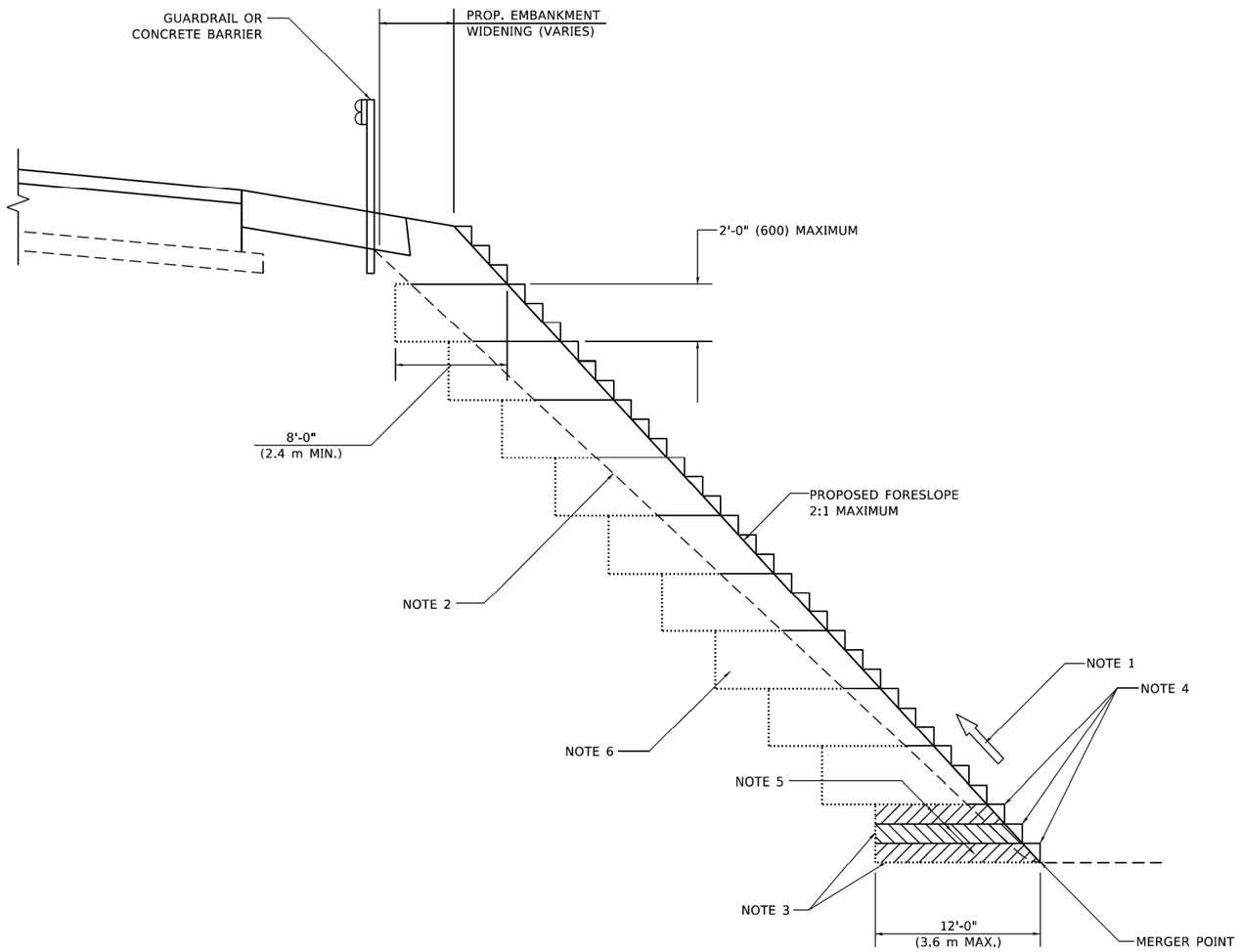

TYPICAL BENCHING DETAIL FOR EMBANKMENT

GENERAL NOTES

1. CONSTRUCT SUCCEEDING BENCH CUTS AND EMBANKMENT PLACEMENT AND COMPACTION FROM BOTTOM TO TOP IN STAIRSTEP FASHION.
2. EXISTING FORESLOPE PREPARED IN ACCORDANCE WITH ARTICLE 205.03 OF THE STANDARD SPECIFICATIONS.
3. BENCH CUT EXISTING SLOPE TYPICAL FOR EACH STEP.
4. TRIM TO FINAL SLOPE.
5. EQUAL 8-INCH (200) LIFTS OF EMBANKMENT COMPACTED IN ACCORDANCE WITH ARTICLE 205.05 OF THE STANDARD SPECIFICATIONS.

BASIS OF PAYMENT

1. EXCAVATION OF BENCH CUTS WITHIN EXISTING EMBANKMENT WILL BE PAID FOR AT THE CONTRACT UNIT PRICE PER CUBIC METER OR CUBIC YARD FOR "EARTH EXCAVATION". THIS PRICE WILL INCLUDE ALL LABOR AND MATERIAL, NO ADDITIONAL COMPENSATION WILL BE ALLOWED.

ALL DIMENSIONS ARE IN INCHES (MILLIMETERS)
UNLESS OTHERWISE SHOWN.

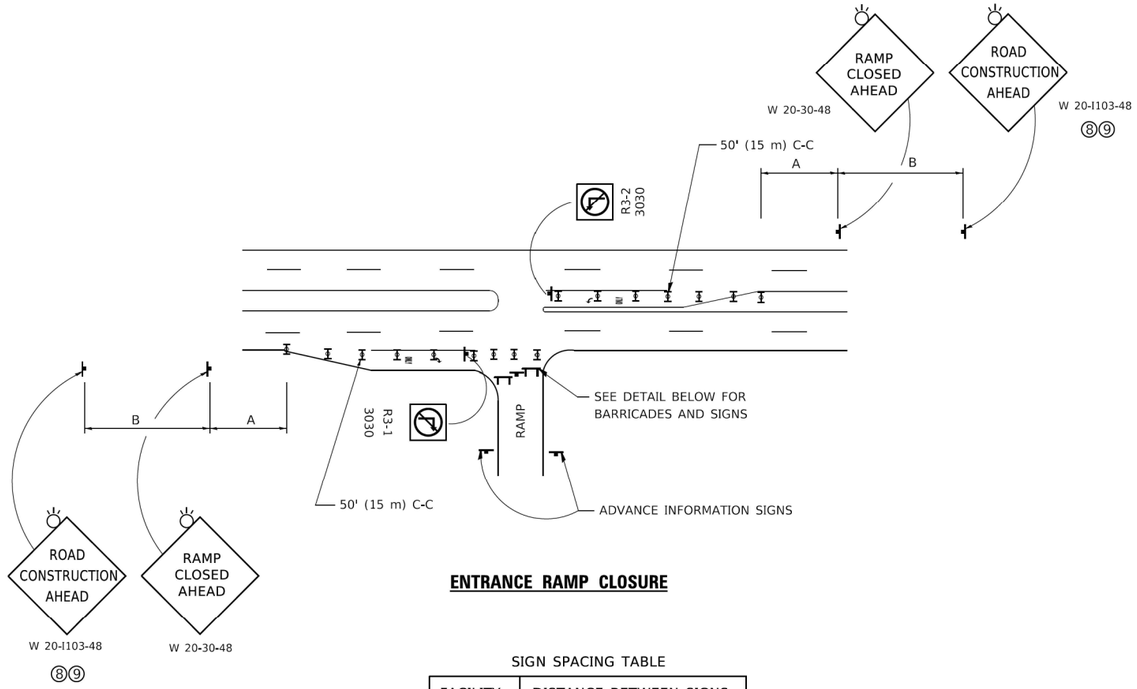

ENTRANCE RAMP CLOSURE

SIGN SPACING TABLE

FACILITY	DISTANCE BETWEEN SIGNS	
	A	B
EXPRESSWAY >24 HOURS	1000' (300 m)	1500' (450 m)
EXPRESSWAY ≤24 HOURS	500' (150 m)	500' (150 m)
ARTERIAL 55 MPH	500' (150 m)	500' (150 m)
ARTERIAL 50-45 MPH	350' (100 m)	350' (100 m)
ARTERIAL <45 MPH	200' (60 m)	200' (60 m)

DISTANCES MAY BE SHORTENED DEPENDING UPON THE PROXIMITY OF ADJACENT RAMPS OR INTERSECTIONS.

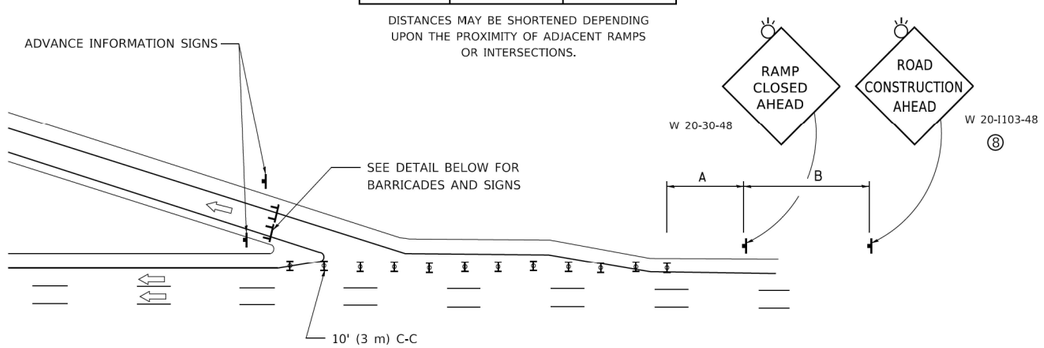

EXIT RAMP CLOSURE

SYMBOLS

TYPE II BARRICADE OR DRUM

TYPE III BARRICADE WITH 2 FLASHING LIGHTS

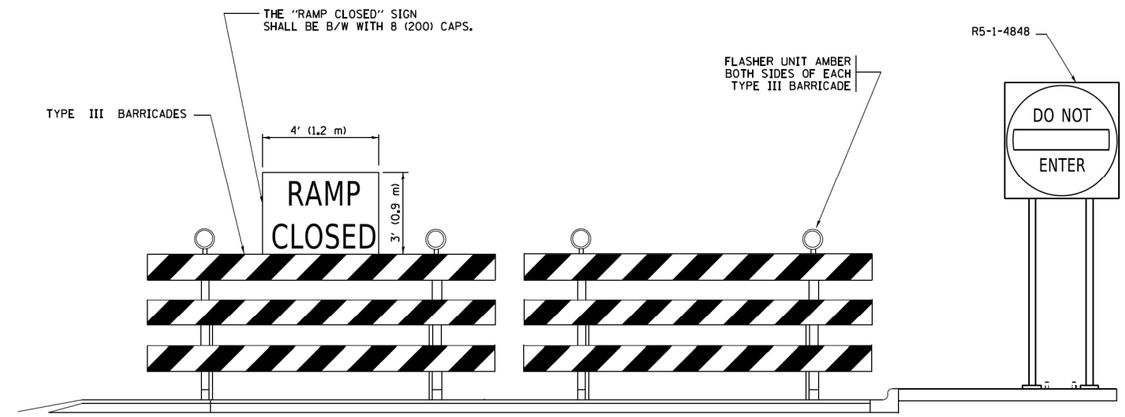

DETAIL FOR REQUIRED BARRICADES & SIGNS

RAMP CLOSURE ADVANCE WARNING SIGN

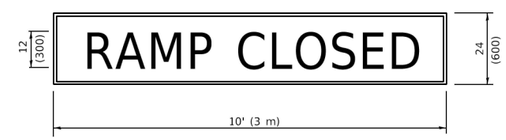

BLACK LEGEND ON ORANGE BACKGROUND MOUNTED DIAGONALLY
E MOD FONT
1 (25) BORDER

THESE SIGNS ARE REQUIRED ON ALL THE EXIT GUIDE SIGNS FOR EXIT RAMPS THAT WILL BE CLOSED FOR MORE THAN FOUR (4) CONSECUTIVE DAYS.

RAMP CLOSURE ADVANCE INFORMATION SIGN

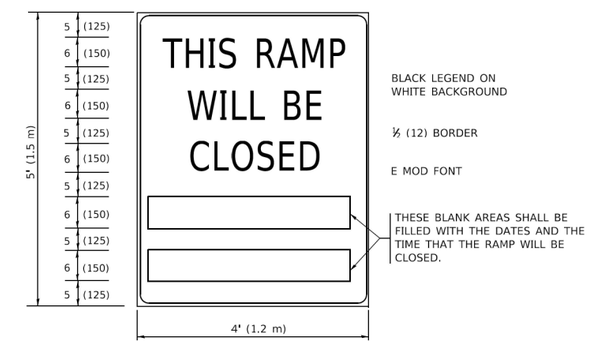

THESE SIGNS ARE REQUIRED ON BOTH SIDES OF THE RAMP, MINIMUM OF 1 WEEK IN ADVANCE OF THE CLOSURE.

THESE SIGNS SHALL BE FABRICATED AND PAID FOR ACCORDING TO THE TEMPORARY INFORMATION SIGNING SPECIAL PROVISION

GENERAL NOTES:

1. CONES MAY BE SUBSTITUTED FOR DRUMS OR TYPE II BARRICADES DURING DAY OPERATIONS. CONES SHALL BE A MINIMUM OF 28 (700) HIGH.
2. VERTICAL BARRICADES SHALL NOT BE USED FOR RAMP CLOSURES.
3. A FLAGGER SHALL BE POSITIONED AT EACH CLOSED RAMP THAT IS OPEN TO CONSTRUCTION VEHICLES, PRECEEDED BY A W20-7 FLAGGER WARNING SIGN.
4. ALL ROUTE MARKERS AND TRAILBLAZER ASSEMBLIES WHICH DIRECT MOTORISTS TO A CLOSED ENTRANCE RAMP SHALL BE COVERED WHEN THE RAMP IS CLOSED FOR MORE THAN FOUR (4) DAYS.
5. THE SIGNING AND BARRICADING WHICH IS REQUIRED BY THIS DETAIL SHALL BE INCLUDED IN THE COST OF TRAFFIC CONTROL AND PROTECTION (EXPRESSWAYS).
6. AUTHORIZATION FROM THE DISTRICT'S BUREAU OF TRAFFIC IS REQUIRED FOR ALL RAMP CLOSURES.
7. THE RAMP CLOSURE ADVANCE INFORMATION SIGNS SHALL BE ERECTED IF THE CLOSURE TIME EXCEEDS TWENTY-FOUR (24) HOURS. ADDITIONAL ADVANCE WARNING SIGNS ON EXIT GUIDE SIGNING WILL BE REQUIRED FOR EXIT RAMP CLOSURES THAT EXCEED FOUR (4) DAYS IN LENGTH
8. ROAD CONSTRUCTION AHEAD SIGNS MAY BE OMITTED WHEN THIS DETAIL IS USED IN CONJUNCTION WITH OTHER TRAFFIC CONTROL THAT ALREADY INCLUDES A ROAD CONSTRUCTION AHEAD SIGN.
9. ARTERIAL ROAD CONSTRUCTION AHEAD SIGNS SHALL BE INSTALLED ON THE LEFT SIDE OF TRAFFIC IF THE MEDIAN IS MORE THAN 10 FT WIDE.

ALL DIMENSIONS ARE IN INCHES (MILLIMETERS) UNLESS OTHERWISE SHOWN.

MODEL: Default
FILE NAME: pw://IL084EBIDINTEG.illinois.gov:PWIDOT\Documents\IDOT Offices\District 1\Projects\District 1 22x34\CADdata\CADsheets\tc08.dgn

TRANSYSTEMS

USER NAME = footemj	DESIGNED - D.W.S.	REVISED - S.P.B._01-07	
	DRAWN -	REVISED - S.P.B._12-09	
PLOT SCALE = 50.0000 ' / in.	CHECKED -	REVISED - M.D._06-13	
PLOT DATE = 3/4/2019	DATE - 02-83	REVISED - M.D._01-18	

STATE OF ILLINOIS
DEPARTMENT OF TRANSPORTATION

ENTRANCE_AND_EXIT_RAMP CLOSURE_DETAILS

SCALE: NONE | SHEET 8 OF 22 SHEETS | STA. TO STA.

F.A. RTE.	SECTION	COUNTY	TOTAL SHEETS	SHEET NO.
			1201	858

TC-08 | CONTRACT NO.62R89

ILLINOIS | FED. AID PROJECT

tc08.dgn 3/4/2019 10:22:32 AM User=footemj

SINGLE LANE WEAVE

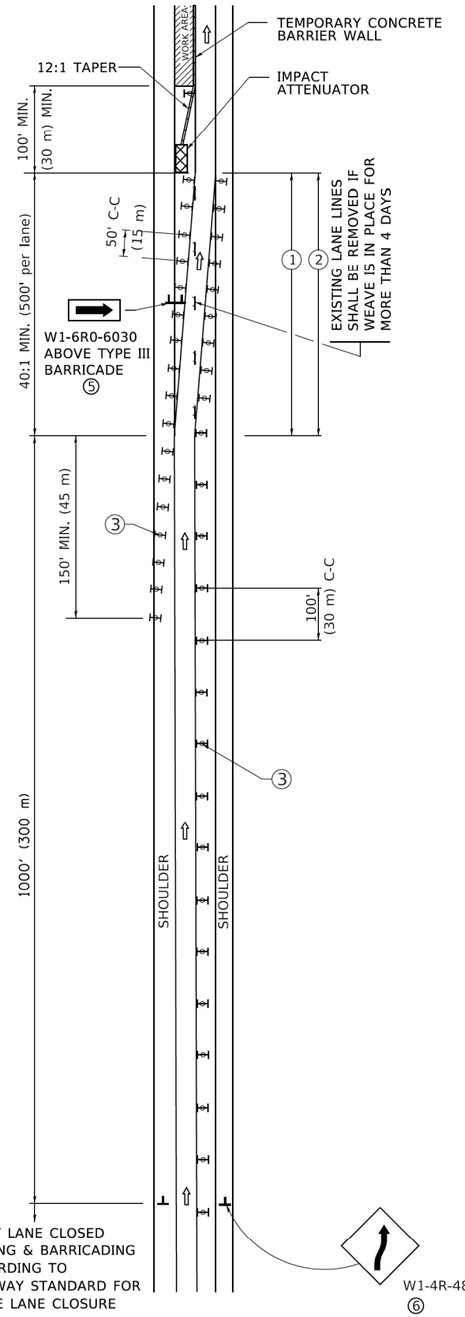

MULTI–LANE WEAVE

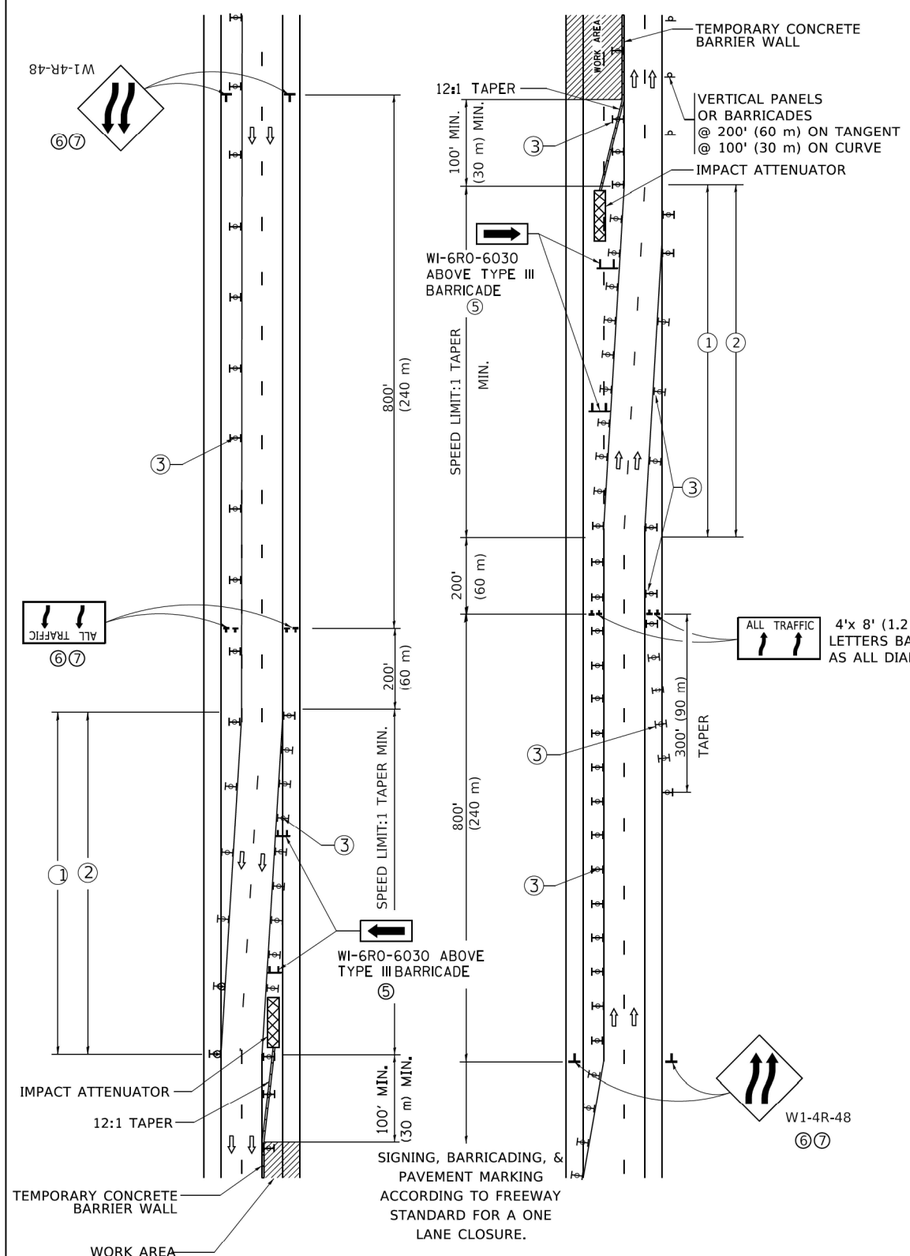

GENERAL NOTES:

① EXISTING CONFLICTING PAVEMENT MARKING LINES SHALL BE REMOVED. PAVEMENT MARKING REMOVAL SHALL NOT BE REQUIRED FOR SINGLE LANE WEAVES UNDER 4 DAYS IN DURATION.

② CONTINOUS REFLECTIVE TEMPORARY PAVEMENT MARKING TAPE SHALL BE PLACED THROUGHOUT THE TAPER AND FOR 300' (90 m) ALONG SIDE THE WORK AREA WHERE THE CLOSURE TIME IS GREATER THAN FOURTEEN DAYS. THE LEFT EDGE LINE SHALL BE YELLOW AND THE RIGHT EDGE LINE SHALL BE WHITE. FOR MULTI-LANE WEAVES LANE LINES SHALL BE 5 INCH, 10'-30' (3 m-9 m) SKIP DASH, WHITE.

③ PLASTIC DRUMS WITH STEADY BURN LIGHTS AT 50' (15 m) C-C SPACING IN TAPERS AND 100' (30 m) C-C SPACING IN TANGENTS.

④ ALL SIGNS SHALL BE POST MOUNTED IF THE CLOSURE TIME EXCEEDS FOUR DAYS.

⑤ TYPE III BARRICADES MAY BE OMMITTED FOR SINGLE-LANE WEAVES UNDER 24-HOURS IN DURATION. W1-6 SIGNS WILL STILL BE REQUIRED. IF THE WIDTH OF OFFSET IS LESS THAN 6' THEN THE TYPE III BARRICADE WITH ATTACHED ARROW SIGN PANEL CAN BE ELIMINATED IN THE TAPER AREAS.

⑥ WHEN THE LENGTH OF THE SHIFTED SEGMENT (DISTANCE BETWEEN WEAVE POINTS) IS LESS THAN 1500', DOUBLE REVERSE CURVE SIGNS (W24-1) SHOULD BE USED INSTEAD OF THE REVERSE CURVE (W1-4) SIGNS. ARROWS ON THE 4'X8' "ALL TRAFFIC" SIGNS SHALL BE THE SAME SHAPE.

⑦ THE NUMBER OF ARROWS ON THESE SIGNS SHALL MATCH THE NUMBER OF LANES OPEN TO TRAFFIC.

SYMBOLS

- DIRECTION OF TRAFFIC
- WORK AREA
- SIGN ON PORTABLE OR PERMANENT SUPPORT
- TYPE II BARRICADE OR DRUM WITH MONO-DIRECTIONAL STEADY BURNING LIGHT
- TEMPORARY CONCRETE BARRIER WALL
- IMPACT ATTENUATOR
- W24-1-48 ⑦

ALL DIMENSIONS ARE IN INCHES (MILLIMETERS) UNLESS OTHERWISE SHOWN

MODEL: Default
FILE NAME: pw:\\IL084EBIONTEG.illinois.gov:PWIDOT\Documents\IDOT Offices\District 1\Projects\District22x34\CADData\CADsheets\tc09.dgn

TRANSYSTEMS

USER NAME = footemj	DESIGNED - D.W.S.	REVISED - J.A.F. 02-06	STATE OF ILLINOIS DEPARTMENT OF TRANSPORTATION	TRAFFIC CONTROL DETAILS FOR FREEWAY SINGLE & MULTI–LANE WEAVE
	DRAWN -	REVISED - S.P.B. 01-07		
PLOT SCALE = 50.0000 ' / In.	CHECKED -	REVISED - S.P.B. 12-09		
PLOT DATE = 3/4/2019	DATE - 02-87	REVISED - M.D. 06-13		SCALE: NONE · SHEET 9 OF 22 SHEETS · STA. · TO STA.

F.A. RTE.	SECTION	COUNTY	TOTAL SHEETS	SHEET NO.
			1201	859
	TC-09	CONTRACT NO.62R89		
		ILLINOIS	FED. AID PROJECT	

tc09.dgn 3/4/2019 10:24:46 AM User=footemj

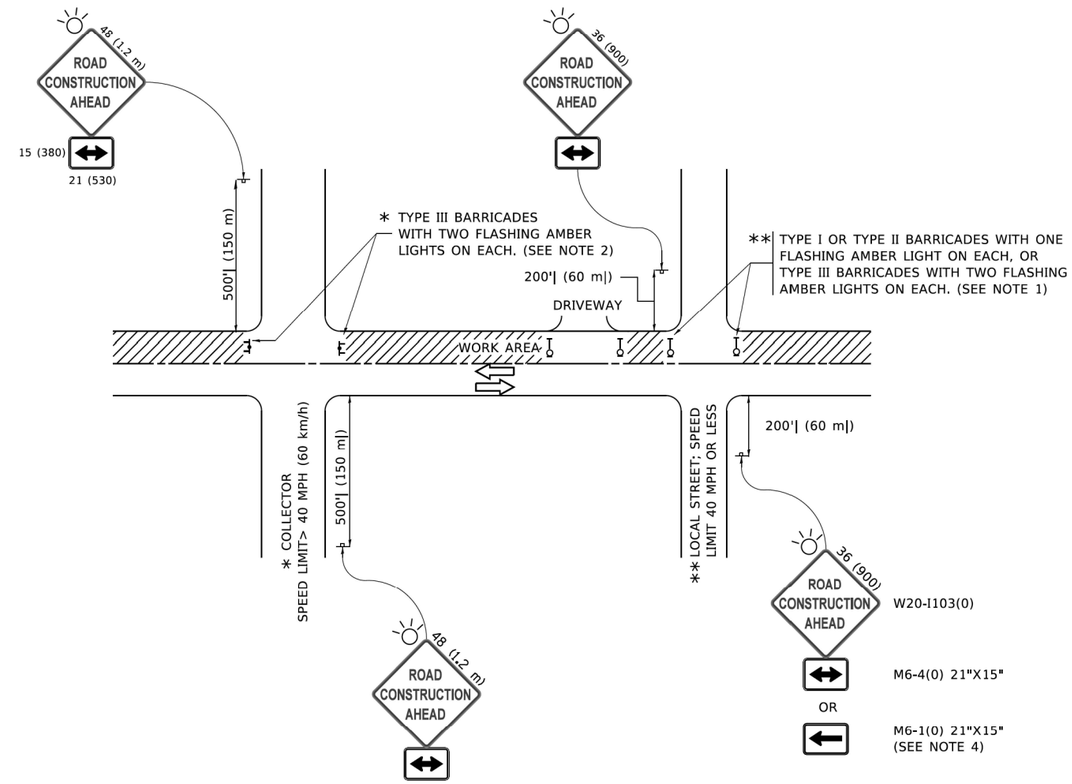

NOTES:

1. SIDE ROAD WITH A SPEED LIMIT OF 40 MPH (60 km/h) OR LESS AS SHOWN ON THE DRAWING AND AS DIRECTED BY THE ENGINEER:

   a) ONE "ROAD CONSTRUCTION AHEAD" SIGN 36 x 36 (900x900) WITH A FLASHER MOUNTED ON IT APPROXIMATELY 200' (60 m) IN ADVANCE OF THE MAIN ROUTE.

   b) THE CLOSED PORTION OF THE MAIN ROUTE SHALL BE PROTECTED BY BLOCKING WITH TYPE I, TYPE II OR TYPE III BARRICADES, 1/3 OF THE CROSS SECTION OF THE CLOSED PORTION.

2. SIDE ROAD WITH A SPEED LIMIT GREATER THAN 40 MPH (60 km/h) AS SHOWN ON THE DRAWING AND AS DIRECTED BY THE ENGINEER:

   a) ONE "ROAD CONSTRUCTION AHEAD" SIGN 48 x 48 (1.2 m x 1.2 m) WITH A FLASHER MOUNTED ON IT APPROXIMATELY 500' (150 m) IN ADVANCE OF THE MAIN ROUTE.

   b) THE CLOSED PORTION OF THE MAIN ROUTE SHALL BE PROTECTED BY BLOCKING WITH TYPE III BARRICADES, 1/2 OF THE CROSS SECTION OF THE CLOSED PORTION.

3. CONES MAY BE SUBSTITUTED FOR BARRICADES OR DRUMS AT HALF THE SPACING DURING DAY OPERATIONS. CONES SHALL BE A MINIMUM OF 28 (710) IN HEIGHT.

4. WHEN THE SIDE ROAD LIES BETWEEN THE BEGINNING OF THE MAINLINE SIGNING AND THE WORK ZONE, A SINGLE HEADED ARROW (M6-1) SHALL BE USED IN LIEU OF THE DOUBLE HEADED ARROW (M6-4).

5. WHEN WORK IS BEING PERFORMED ON A SIDE ROAD OR DRIVEWAY, FOLLOW THE APPLICABLE STANDARD(S). THE DIRECTIONAL ARROW (M6-1 OR M6-4) SHALL BE COVERED OR REMOVED WHEN NO LONGER CONSISTENT WITH THE TRAFFIC CONTROL SET-UP.

6. ADVANCE WARNING SIGNS ARE TO BE OMITTED ON DRIVEWAYS UNLESS OTHERWISE SPECIFIED IN THE PLANS OR BY THE ENGINEER.

7. THE TRAFFIC CONTROL AND PROTECTION FOR SIDE ROADS, INTERSECTIONS, AND DRIVEWAYS SHALL BE INCLUDED IN THE COST OF SPECIFIED TRAFFIC CONTROL STANDARDS OR ITEMS.

All dimensions are in inches (millimeters) unless otherwise shown.

MODEL: Default
FILE NAME: pw:\\il.084BIDINTEG.illinois.gov:PWIDOT\Documents\IDOT Offices\District 1\Projects\Dist5d22x34\CADData\CADsheets\tc10.dgn

TRANSYSTEMS

USER NAME = footem]	DESIGNED - L.H.A.	REVISED - A. HOUSEH 10-15-96	
	DRAWN -	REVISED - T. RAMMACHER 01-06-00	
PLOT SCALE = 50.0000 ' / in.	CHECKED -	REVISED - A. SCHUETZE 07-01-13	
PLOT DATE = 3/4/2019	DATE - 06-89	REVISED - A. SCHUETZE 09-15-16	

STATE OF ILLINOIS
DEPARTMENT OF TRANSPORTATION

TRAFFIC CONTROL AND PROTECTION FOR SIDE ROADS, INTERSECTIONS, AND DRIVEWAYS

SCALE: NONE | SHEET 10 OF 22 SHEETS | STA. TO STA.

F.A. RTE.	SECTION	COUNTY	TOTAL SHEETS	SHEET NO.
			1201	860
	TC-10	CONTRACT NO.62R89		
	ILLINOIS	FED. AID PROJECT		

tc10.dgn 3/4/2019 10:27:07 AM User=footemi

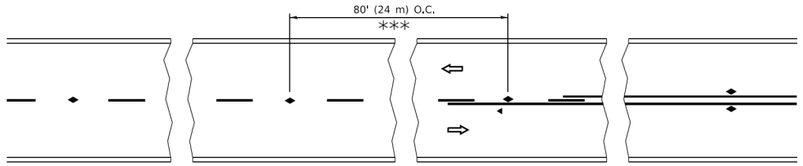

*** REDUCE TO 40' (12 m) O.C. ON CURVES WITH POSTED OR ADVISORY SPEED 45 M.P.H. (70 km/h) OR LESS.

TWO–LANE/TWO–WAY

SEE FIGURE 3B-14 MUTCD

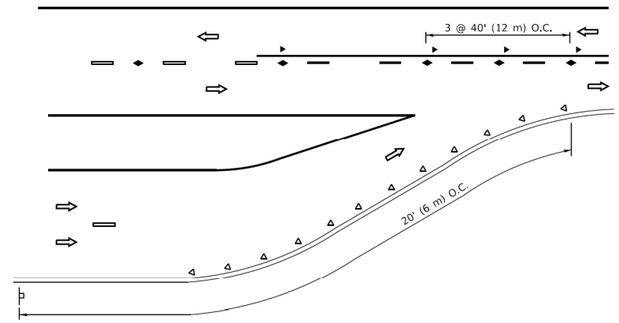

LANE REDUCTION TRANSITION

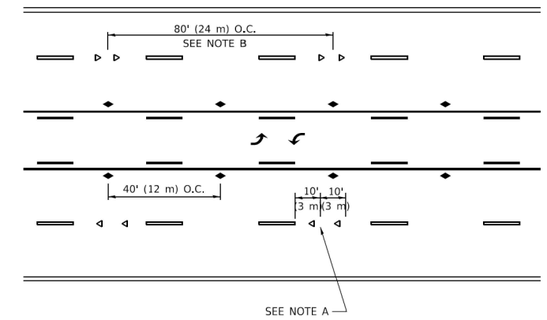

TWO–WAY LEFT TURN

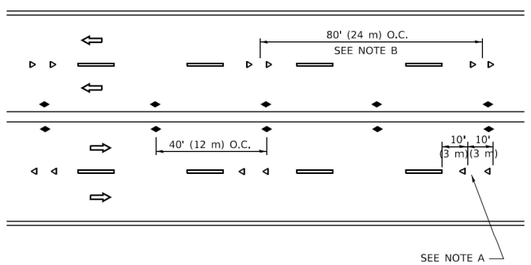

MULTI–LANE/UNDIVIDED

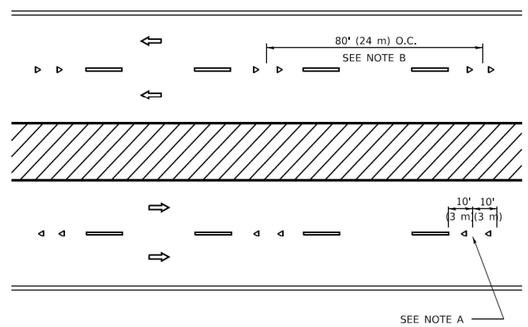

MULTI–LANE/DIVIDED

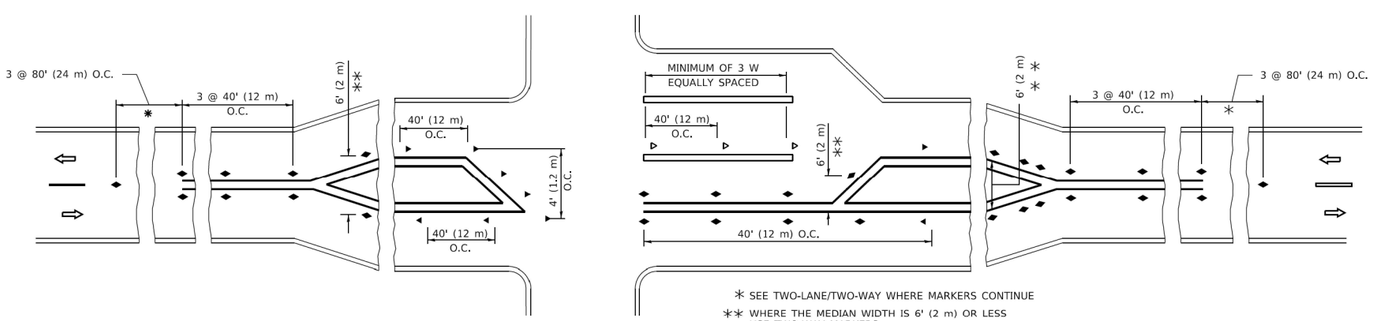

* SEE TWO-LANE/TWO-WAY WHERE MARKERS CONTINUE

** WHERE THE MEDIAN WIDTH IS 6' (2 m) OR LESS USE TWO-WAY MARKERS.

TURN LANES

GENERAL NOTES

1. MARKERS USED WITH DASHED LINES SHALL BE CENTERED IN THE GAP BETWEEN SEGMENTS.
2. MARKERS USED ADJACENT TO SOLID LINES SHALL BE OFFSET 2 TO 3 (50 TO 75) TOWARD TRAFFIC AS SHOWN.
3. MARKERS THROUGH TANGENTS LESS THAN 500' (150 m) IN LENGTH BETWEEN CURVES SHALL BE INSTALLED AT THE LESSER OF THE TWO CURVE SPACINGS.
4. MARKERS ARE TO BE USED ADJACENT TO BOTH SOLID WHITE LINES IN DUAL LEFT TURN LANES

SYMBOLS

- YELLOW STRIPE
- WHITE STRIPE
- ONE-WAY AMBER MARKER
- ONE-WAY CRYSTAL MARKER (W/O)
- TWO-WAY AMBER MARKER

LANE MARKER NOTES

A. USE DOUBLE LANE LINE MARKERS SPACED AS SHOWN.

B. REDUCE TO 40' (12 m) O.C. ON CURVES WHERE ADVISORY SPEEDS ARE 10 M.P.H (20 km/h) LOWER THAN POSTED SPEEDS.

DESIGN NOTES

1. DOUBLE LANE LINE MARKERS SHALL BE USED UNLESS SPECIFIED OTHERWISE.
2. EXCEPT AS SHOWN ON THE LANE REDUCTION TRANSITION AND FREEWAY EXIT RAMP DETAIL, MARKERS ARE NOT TO BE SPECIFIED ON RIGHT EDGE LINES.
3. THE EXACT MARKER LIMITS, SPACING, AND COLOR SHALL BE INCLUDED IN THE PLANS WHEN STANDARD SPECIFICATIONS ARE NOT BEING USED.
4. MARKERS SHOULD NOT BE USED ALONGSIDE CURBS EXCEPT FOR EXTREMELY SHORT SECTIONS OF CURBS WHERE NOT MORE THAN TWO MARKERS WOULD BE INVOLVED.

All dimensions are in inches (millimeters) unless otherwise shown.

MODEL: Default
FILE NAME: pw:\\IL084EBIDINTEG.illinois.gov:PWIDOT\Documents\IDOT Offices\District 1\Projects\Std22x34\CADData\CADsheets\tc11.dgn

TRANSYSTEMS

USER NAME = footemj	DESIGNED -	REVISED - T. RAMMACHER 03-12-99	
	DRAWN -	REVISED - T. RAMMACHER 01-06-00	
PLOT SCALE = 50.0000 ' / in.	CHECKED -	REVISED - C. JUCIUS 09-09-09	
PLOT DATE = 3/4/2019	DATE -	REVISED - C. JUCIUS 07-01-13	

STATE OF ILLINOIS
DEPARTMENT OF TRANSPORTATION

TYPICAL APPLICATIONS
RAISED REFLECTIVE PAVEMENT MARKERS (SNOW–PLOW RESISTANT)

SCALE: NONE | SHEET 11 OF 22 SHEETS | STA. TO STA.

F.A. RTE.	SECTION	COUNTY	TOTAL SHEETS	SHEET NO.
			1201	861
	TC–11	CONTRACT NO.62R89		
		ILLINOIS	FED. AID PROJECT	

tc11.dgn 3/4/2019 10:29:08 AM User=footemj

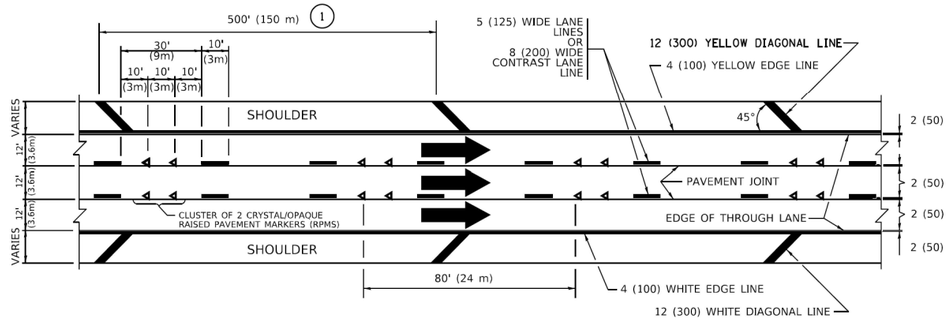

TYPICAL EDGE LINES & LANE LINES

PAVEMENT MARKING MATERIALS

1. THERMOPLASTIC PAVEMENT MARKING LINE SHALL BE USED FOR ALL EDGE LINES, GORE LINES, AND DIAGONAL LINES ON HMA PAVEMENTS.
2. POLYUREA OR MODIFIED URETHANE PAVEMENT MARKING LINE SHALL BE USED FOR ALL EDGE LINES, GORE LINES, AND DIAGONAL LINES ON PCC PAVEMENTS.
3. PREFORMED PLASTIC PAVEMENT MARKING LINE TYPE D, INLAID OR GROOVE IN, SHALL BE USED FOR ALL LANE LINES ON HMA PAVEMENTS.
4. CONTRAST PREFORMED PLASTIC PAVEMENT MARKING LINE TYPE B, GROOVE IN, SHALL BE USED FOR ALL LANE LINES ON PCC PAVEMENT.

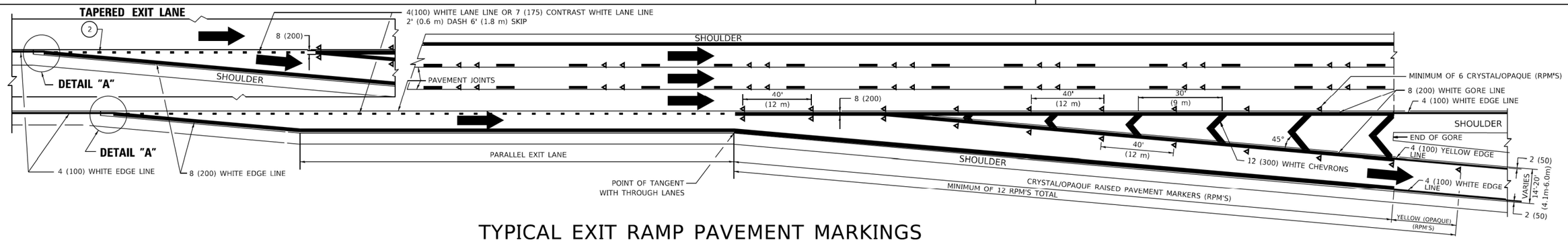

TYPICAL EXIT RAMP PAVEMENT MARKINGS

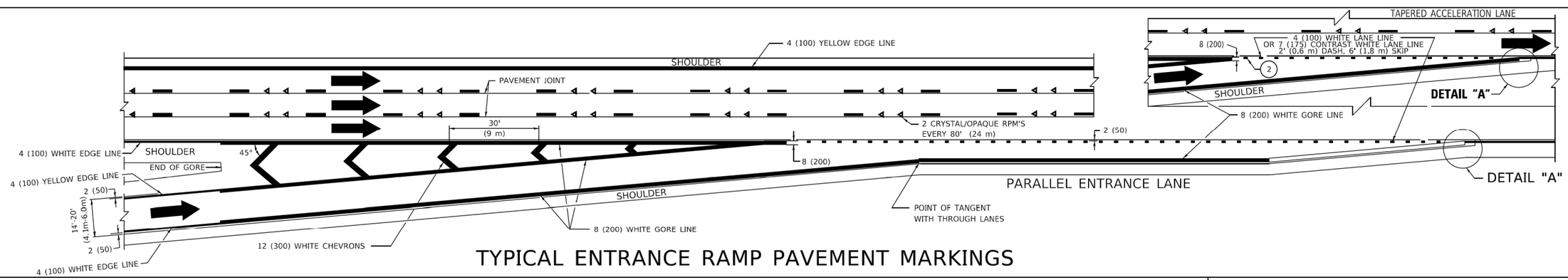

TYPICAL ENTRANCE RAMP PAVEMENT MARKINGS

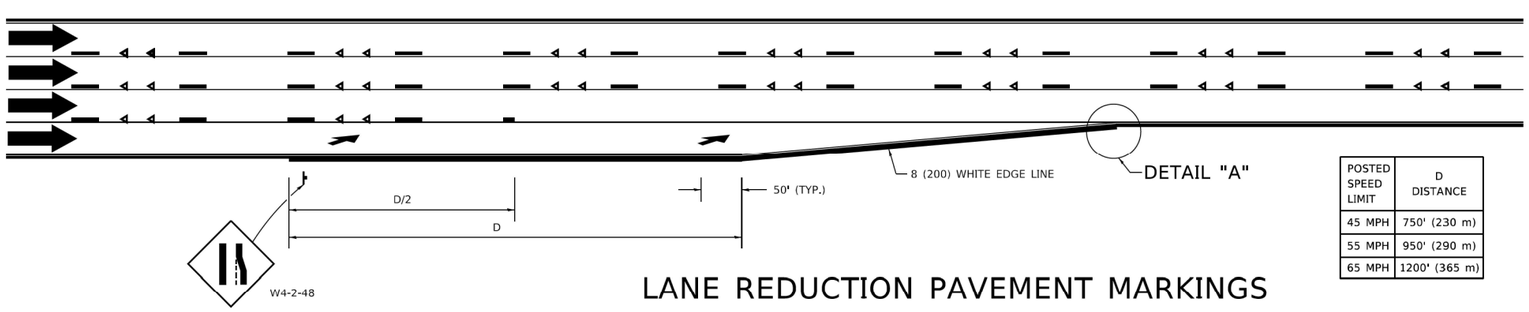

LANE REDUCTION PAVEMENT MARKINGS

POSTED SPEED LIMIT	D DISTANCE
45 MPH	750' (230 m)
55 MPH	950' (290 m)
65 MPH	1200' (365 m)

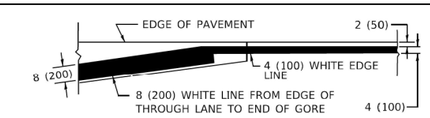

DETAIL "A"

NOTES:

1. THE DIAGONAL LINES SHALL BE SPACED AT 40' (12 m) C-C ACROSS ALL STRUCTURES WHICH ARE 500' (150 m) OR LESS IN LENGTH. THE DIAGONAL LINES ARE NOT REQUIRED ON SHOULDERS WHICH ARE 6' (1.8 m) OR LESS IN WIDTH.
2. 4" (2' DASH, 6' SKIP) MARKING ON TAPERED ENTRANCE AND EXIT RAMP SHALL BE OMITTED ON TANGENT SECTIONS.

MODEL: Default
FILE NAME: pw:\\illdot-pw.bentley.com:PWIDOT\Documents\IDOT Offices\District 1\Projects\DistStd22-34\CADData\CADsheets\tc12.dgn

TRANSYSTEMS

USER NAME = Lawrence.DeManche	DESIGNED - D.W.S.	REVISED - S.P.B. 01-10	
	DRAWN -	REVISED - M.D. 05-13	
PLOT SCALE = 100.0000 ' / in.	CHECKED -	REVISED - M.D. 09-17	
PLOT DATE = 11/18/2022	DATE - 01-90	REVISED - K. SMITH 11-18-22	

STATE OF ILLINOIS
DEPARTMENT OF TRANSPORTATION

MULTI-LANE FREEWAY
PAVEMENT MARKING DETAILS

SCALE: NONE | SHEET 12 OF 22 SHEETS | STA. | TO STA.

F.A. RTE.	SECTION	COUNTY	TOTAL SHEETS	SHEET NO.
			1201	862
TC-12		CONTRACT NO.62R89		
		ILLINOIS FED. AID PROJECT		

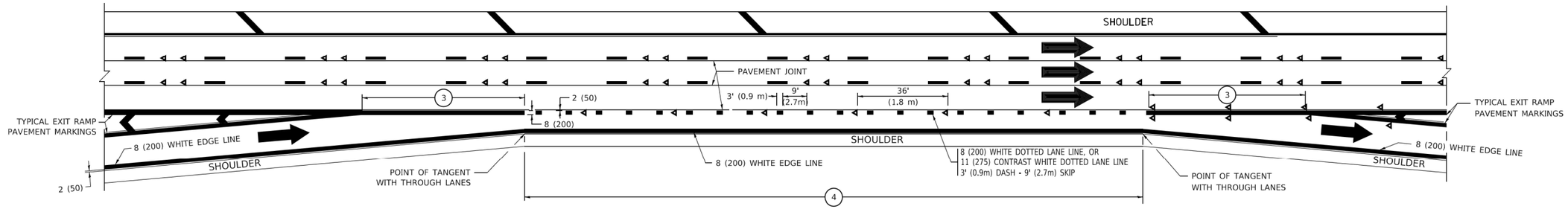

AUXILIARY LANE MARKINGS

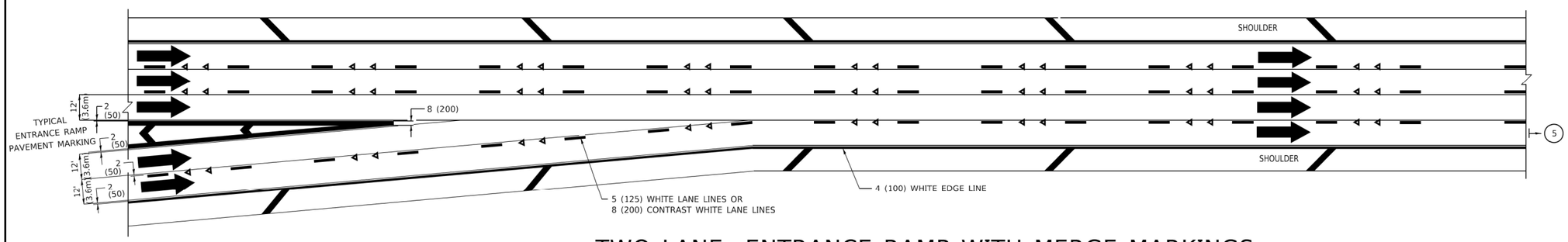

TWO LANE ENTRANCE RAMP WITH MERGE MARKINGS

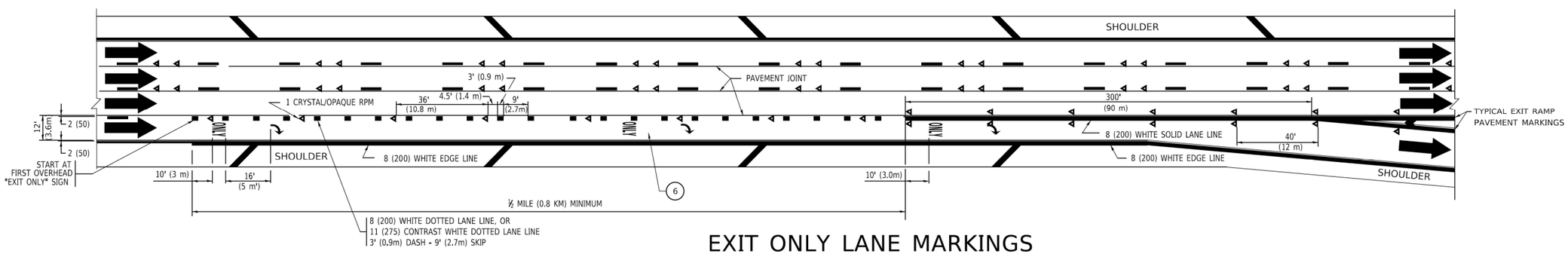

EXIT ONLY LANE MARKINGS

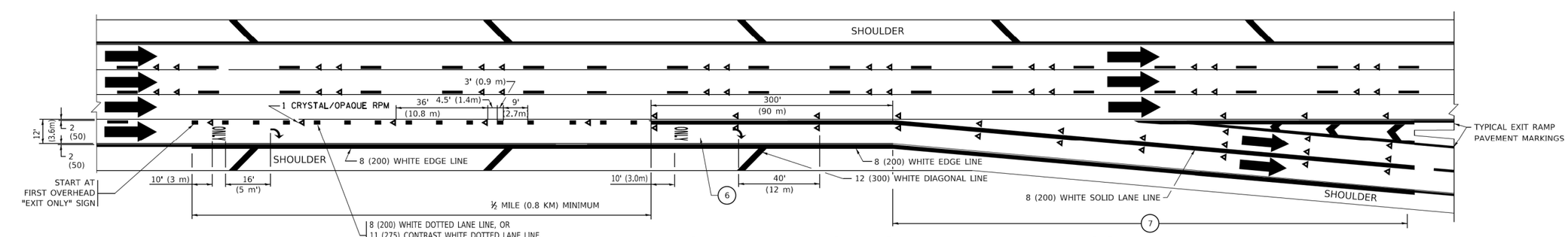

EXIT ONLY WITH OPTION LANE MARKINGS

NOTES:

3. OMIT WHEN LENGTH OF AUXILIARY LANE IS LESS THAN 500' (150 m).
4. 8-INCH WIDE DOTTED LANE LINE MARKINGS SHALL BE USED WHEN THE LENGTH OF THE AUXILIARY LANE IS 2 MILES OR LESS.
5. FOR TWO-LANE ENTRANCE RAMP, IF RIGHT LANE ENDS, USE TYPICAL ENTRANCE RAMP PAVEMENT MARKINGS.
6. ONLY AND ARROWS EQUALLY SPACED, 500' (150 m) MAXIMUM SPACING. FULL SIZE LETTERS AND ARROW SHALL BE USED..
7. CONTINUE 8" SOLID LANE LINE THROUGH EXIT TO END OF PAVED GORE.

MODEL: Default
FILE NAME: pw:\\IL084EBIDINTEG.illinois.gov:PWIDOT\Documents\IDOT Offices\District 1\Projects\DistStd22x34\CADData\CADsheets\tc12.dgn

TRANSYSTEMS

USER NAME = footemj	DESIGNED - D.W.S.	REVISED - J.A.F. 02-06	
	DRAWN -	REVISED - S.P.B. 01-07	
PLOT SCALE = 50.0000 ' / in.	CHECKED -	REVISED - S.P.B. 01-10	
PLOT DATE = 3/4/2019	DATE - 01-90	REVISED - M.D. 09-17	

STATE OF ILLINOIS
DEPARTMENT OF TRANSPORTATION

MULTI-LANE FREEWAY
PAVEMENT MARKING DETAILS

SCALE: NONE | SHEET 13 OF 22 SHEETS | STA. | TO STA.

F.A. RTE.	SECTION	COUNTY	TOTAL SHEETS	SHEET NO.
			1201	863
	TC-12	CONTRACT NO.62R89		
		ILLINOIS	FED. AID PROJECT	

tc12.dgn 3/4/2019 10:32:33 AM User=footemsi

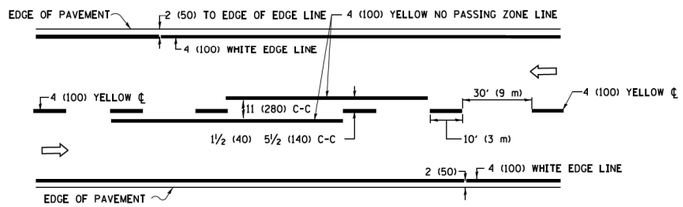

2–LANE ROADWAY

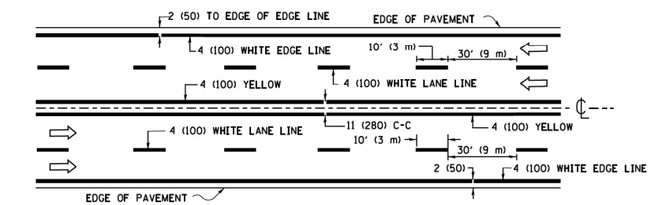

MULTI–LANE UNDIVIDED

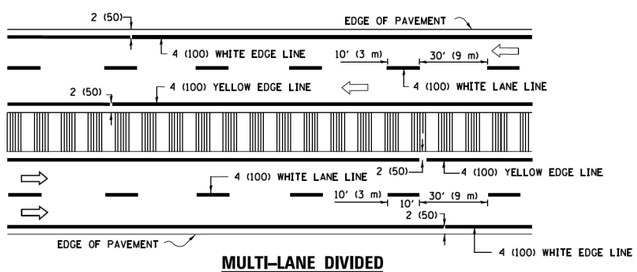

MULTI–LANE DIVIDED
WITH MEDIAN

TYPICAL LANE AND EDGE LINE MARKING

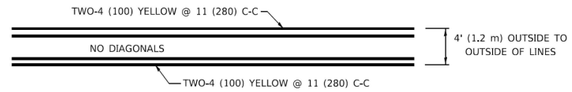

4' (1.2 m) WIDE MEDIANS ONLY

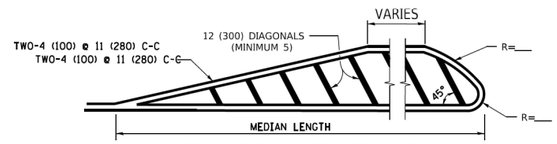

FOR MEDIAN LENGTHS WHERE DIAGONAL SPACING CANNOT BE ATTAINED, USE 5 (FIVE) EQUALLY SPACED DIAGONAL LINES.

DIAGONAL LINE SPACING: 50' (15 m) C-C (LESS THAN 30MPH (50 km/h))
75' (25 m) C-C 30MPH (50 km/h) TO 45MPH (70 km/h))
150' (45 m) C-C (MORE THAN 45MPH (70 km/h))

MEDIANS OVER 4' (1.2 m) WIDE

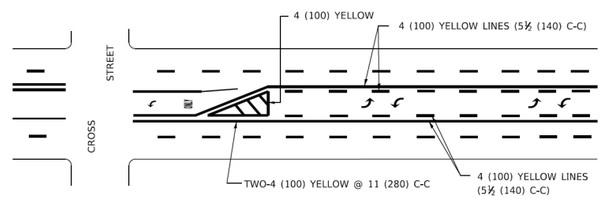

A MINIMUM OF TWO PAIRS OF TURN ARROWS SHALL BE USED, WHITE IN COLOR. ADDITIONAL PAIRS SHALL BE PLACED AT 200' (60 m) TO 300' (90 m) INTERVALS.

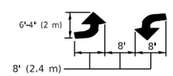

MEDIAN WITH TWO–WAY LEFT TURN LANE

TYPICAL PAINTED MEDIAN MARKING

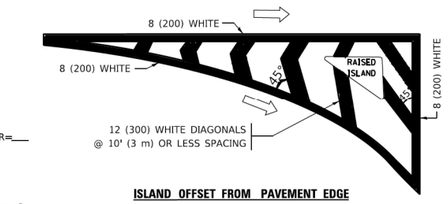

ISLAND OFFSET FROM PAVEMENT EDGE

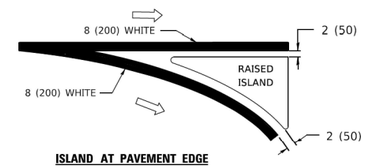

ISLAND AT PAVEMENT EDGE

TYPICAL ISLAND MARKING

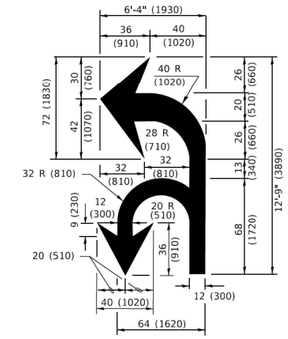

COMBINATION LEFT AND U–TURN

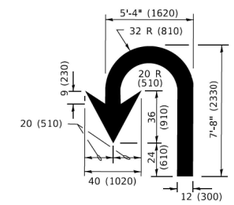

U–TURN

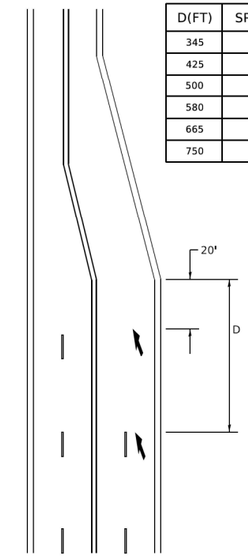

D(FT)	SPEED LIMIT
345	30
425	35
500	40
580	45
665	50
750	55

LANE REDUCTION TRANSITION

* LANE REDUCTION ARROWS REQUIRED AT SPEEDS OF 45 MPH OR GREATER OR WHEN SPECIFIED IN PLANS.

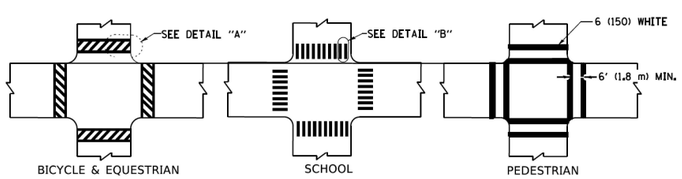

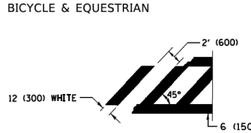

DETAIL "A"

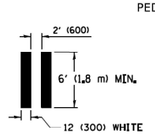

DETAIL "B"

TYPICAL CROSSWALK MARKING

* MARKINGS SHALL BE INSTALLED PARALLEL TO THE CENTERLINE OF THE ROAD WHICH IT CROSSES

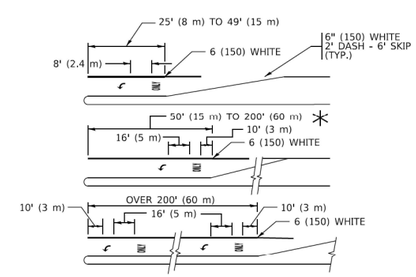

FULL SIZE LETTERS 8' (2.4 m) AND ARROWS SHALL BE USED.
AREA = 15.6 SQ. FT. (1.5 m²) **ONLY** AREA = 20.8 SQ. FT. (1.9 m²)

* TURN LANES IN EXCESS OF 400' (120 m) IN LENGTH MAY HAVE AN ADDITIONAL SET OF ARROW - "ONLY" INSTALLED MIDWAY BETWEEN THE OTHER TWO SETS OF ARROW - "ONLY".

TYPICAL LEFT (OR RIGHT) TURN LANE

TYPICAL TURN LANE MARKING

TYPE OF MARKING	WIDTH OF LINE	PATTERN	COLOR	SPACING / REMARKS
CENTERLINE ON 2 LANE PAVEMENT	4 (100)	SKIP-DASH	YELLOW	10' (3 m) LINE WITH 30' (9 m) SPACE
CENTERLINE ON MULTI-LANE UNDIVIDED PAVEMENT	2 @ 4 (100)	SOLID	YELLOW	11 (280) C-C
NO PASSING ZONE LINES: FOR ONE DIRECTION FOR BOTH DIRECTIONS	4 (100) 2 @ 4 (100)	SOLID SOLID	YELLOW YELLOW	5½ (140) C-C FROM SKIP-DASH CENTERLINE 11 (280) C-C OMIT SKIP-DASH CENTERLINE BETWEEN
LANE LINES	4 (100) 5 (125) ON FREEWAYS	SKIP-DASH SKIP-DASH	WHITE WHITE	10' (3 m) LINE WITH 30' (9 m) SPACE
DOTTED LINES (EXTENSIONS OF CENTER, LANE OR TURN LANE MARKINGS)	SAME AS LINE BEING EXTENDED	SKIP-DASH	SAME AS LINE BEING EXTENDED	2' (600) LINE WITH 6' (1.8 m) SPACE
EDGE LINES	4 (100)	SOLID	YELLOW-LEFT WHITE-RIGHT	OUTLINE MEDIANS IN YELLOW
TURN LANE MARKINGS	6 (150) LINE; FULL SIZE LETTERS & SYMBOLS (8' (2.4m))	SOLID	WHITE	SEE TYPICAL TURN LANE MARKING DETAIL
TWO WAY LEFT TURN MARKING	2 @ 4 (100) EACH DIRECTION 8' (2.4m) LEFT ARROW	SKIP-DASH AND SOLID IN PAIRS	YELLOW WHITE	10' (3 m) LINE WITH 30' (9 m) SPACE FOR SKIP-DASH; 5½ (140) C-C BETWEEN SOLID LINE AND SKIP-DASH LINE SEE TYPICAL TWO-WAY LEFT TURN MARKING DETAIL
CROSSWALK LINES (PEDESTRIAN) A. DIAGONALS (BIKE & EQUESTRIAN) B. LONGITUDINAL BARS (SCHOOL)	2 @ 6 (150) 12 (300) @ 45° 12 (300) @ 90°	SOLID SOLID SOLID	WHITE WHITE WHITE	NOT LESS THAN 6' (1.8 m) APART 2' (600) APART 2' (600) APART SEE TYPICAL CROSSWALK MARKING DETAILS.
STOP LINES	24 (600)	SOLID	WHITE	PLACE 4' (1.2 m) IN ADVANCE OF AND PARALLEL TO CROSSWALK, IF PRESENT. OTHERWISE, PLACE AT DESIRED STOPPING POINT. PARALLEL TO CROSSROAD CENTERLINE, WHERE POSSIBLE
PAINTED MEDIANS	2 @ 4 (100) WITH 12 (300) DIAGONALS @ 45° NO DIAGONALS USED FOR 4' (1.2 m) WIDE MEDIANS	SOLID	YELLOW: TWO WAY TRAFFIC WHITE: ONE WAY TRAFFIC	11 (280) C-C FOR THE DOUBLE LINE SEE TYPICAL PAINTED MEDIAN MARKING.
GORE MARKING AND CHANNELIZING LINES	8 (200) WITH 12 (300) DIAGONALS @ 45°	SOLID	WHITE	DIAGONALS: 15' (4.5 m) C-C (LESS THAN 30MPH (50 km/h)) 20' (6 m) C-C 30MPH (50 km/h) TO 45MPH (70 km/h)) 30' (9 m) C-C (OVER 45MPH (70 km/h))
RAILROAD CROSSING	24 (600) TRANSVERSE LINES; "RR" IS 6' (1.8 m) LETTERS; 16 (400) LINE FOR "X"	SOLID	WHITE	SEE STATE STANDARD 780001 AREA OF: "R"=3.6 SQ. FT. (0.33 m²) EACH "X"=54.0 SQ. FT. (5.0 m²)
SHOULDER DIAGONALS (REQUIRED FOR SHOULDERS ≥ 8')	12 (300) @ 45°	SOLID	WHITE - RIGHT YELLOW - LEFT	50' (15 m) C-C (LESS THAN 30MPH (50 km/h)) 75' (25 m) C-C (30 MPH (50 km/h) TO 45MPH (70 km/h)) 150' (45 m) C-C (OVER 45MPH (70 km/h))
U TURN ARROW	SEE DETAIL	SOLID	WHITE	16.3 SF
2 ARROW COMBINATION LEFT AND U TURN	SEE DETAIL	SOLID	WHITE	30.4 SF

FOR FURTHER DETAILS ON PAVEMENT MARKING REFER TO STANDARD SPECIFICATIONS FOR ROAD AND BRIDGE CONSTRUCTION AND STATE STANDARD 780001.

All dimensions are in inches (millimeters) unless otherwise shown.

TRANSYSTEMS

USER NAME = footemj	DESIGNED - EVERS	REVISED - C. JUCIUS 09-09-09	
	DRAWN -	REVISED - C. JUCIUS 07-01-13	
PLOT SCALE = 50.0000 ' / in.	CHECKED -	REVISED - C. JUCIUS 12-21-15	
PLOT DATE = 3/4/2019	DATE - 03-19-90	REVISED - C. JUCIUS 04-12-16	

STATE OF ILLINOIS
DEPARTMENT OF TRANSPORTATION

DISTRICT ONE
TYPICAL PAVEMENT MARKINGS

SCALE: NONE | SHEET 14 OF 22 SHEETS | STA. TO STA.

F.A. RTE.	SECTION	COUNTY	TOTAL SHEETS	SHEET NO.
			1201	864
TC–13		CONTRACT NO.62R89		
		ILLINOIS	FED. AID PROJECT	

MODEL: Default
FILE NAME: pw:\\IL084EBIDINTEG.illinois.gov:PWIDOT\Documents\IDOT Offices\District 1\Projects\D1s51s22-23A\CADData\CADsheets\tc13.dgn

tc13.dgn 3/4/2019 10:34:37 AM User=footemj

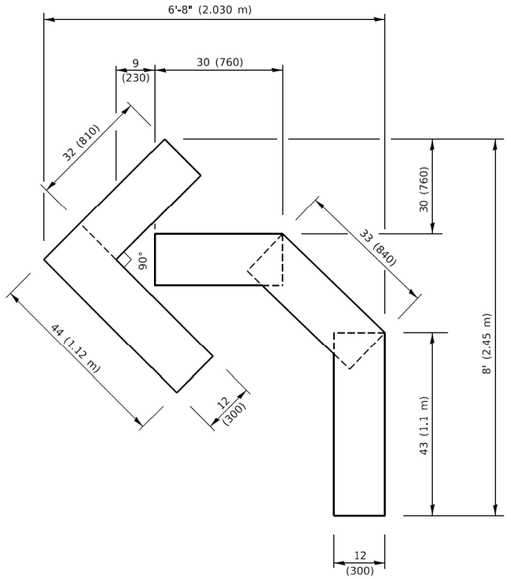

QUANTITY

4 (100) LINE = 45.5 ft. (13.9 m)
15.2 sq. ft. (1.41 sq. m)

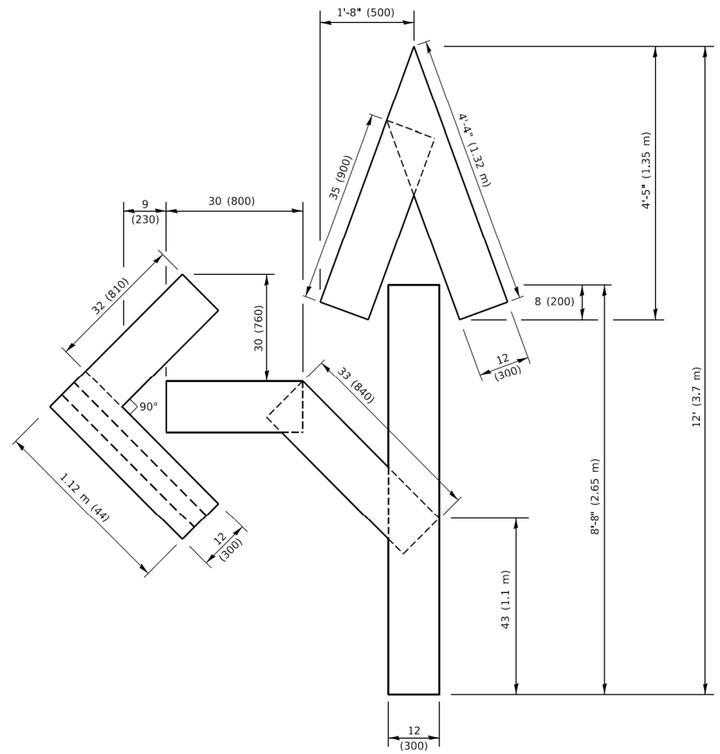

QUANTITY

4 (100) LINE = 82.5 ft. (25.1 m)
27.5 sq. ft. (2.53 sq. m)

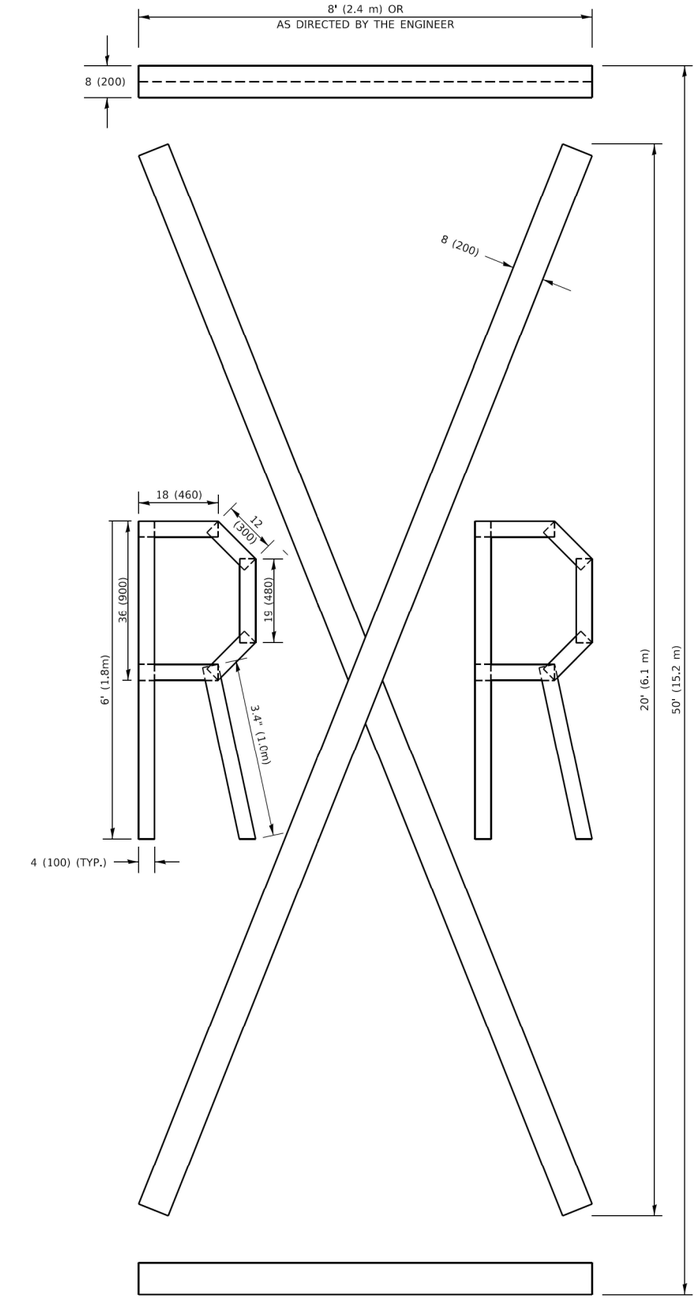

QUANTITY

4 (100) LINE = 225.9 ft. (68.9 m)
75.3 sq. ft. (6.99 sq. m)

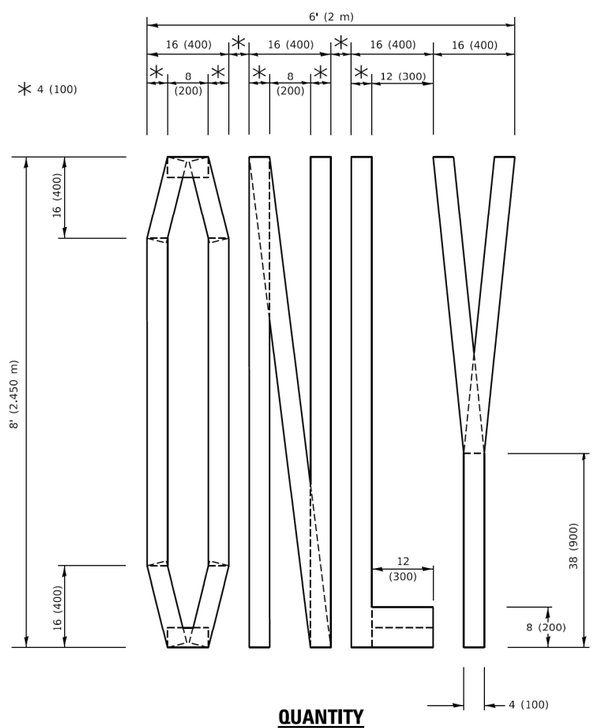

QUANTITY

4 (100) LINE = 64.1 ft. (19.5 m)
21.4 sq. ft. (1.99 sq. m)

NOTE:

ALL QUANTITIES OF PLACEMENT ARE REPRESENTED IN LINEAR FEET OF 4" LINES TO MATCH THE 4" TEMPORARY TAPE PAY ITEM AND REPRESENTS THE TOTAL QUANTITY OF 4" TAPE REQUIRED.

All dimensions are in inches (millimeters) unless otherwise shown.

MODEL: Default
FILE NAME: pw:\\IL084EBIDINTEG.illinois.gov:PWIDOT\Documents\IDOT Offices\District 1\Projects\DistStd22x34\CADData\CADsheets\tc16.dgn

TRANSYSTEMS

USER NAME = footemj	DESIGNED -	REVISED - T. RAMMACHER 03-02-98	
	DRAWN -	REVISED - E. GOMEZ 08-28-00	
PLOT SCALE = 50.0068 ' / in.	CHECKED -	REVISED - E. GOMEZ 08-28-00	
PLOT DATE = 3/4/2019	DATE - 09-18-94	REVISED - A. SCHUETZE 09-15-16	

STATE OF ILLINOIS
DEPARTMENT OF TRANSPORTATION

SHORT TERM PAVEMENT MARKING LETTERS AND SYMBOLS

SCALE: NONE | SHEET 15 OF 22 SHEETS | STA. TO STA.

F.A. RTE.	SECTION	COUNTY	TOTAL SHEETS	SHEET NO.
			1201	865
	TC-16	CONTRACT NO.62R89		
		ILLINOIS	FED. AID PROJECT	

tc16.dgn 3/4/2019 10:37:31 AM User=footemj

PARTIAL RAMP CLOSURE DETAILS

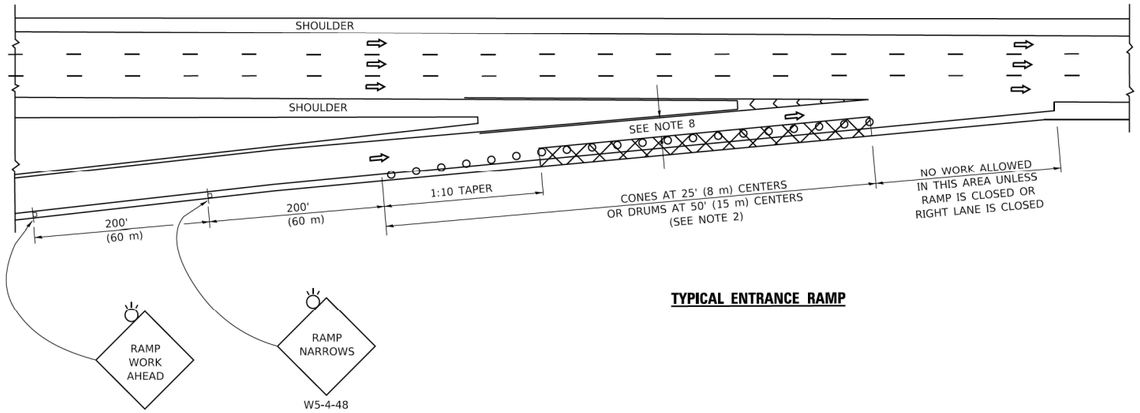

TYPICAL ENTRANCE RAMP

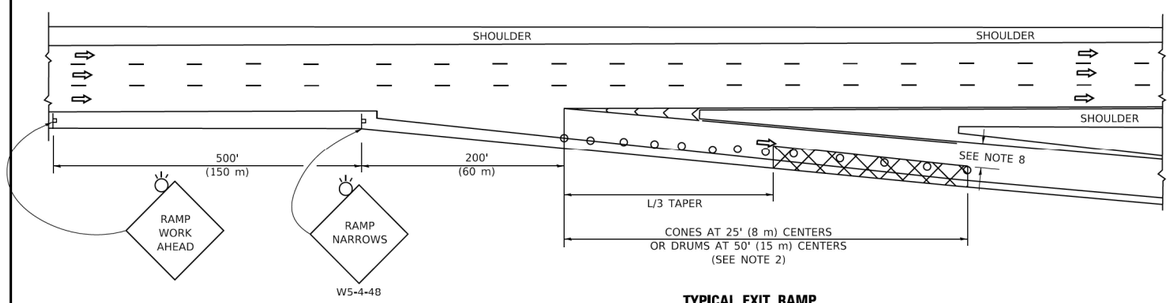

TYPICAL EXIT RAMP

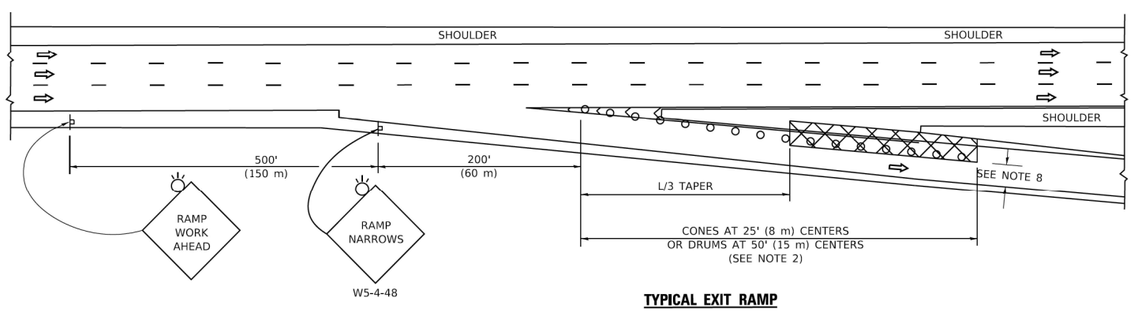

TYPICAL EXIT RAMP

SHOULDER CLOSURE DETAILS

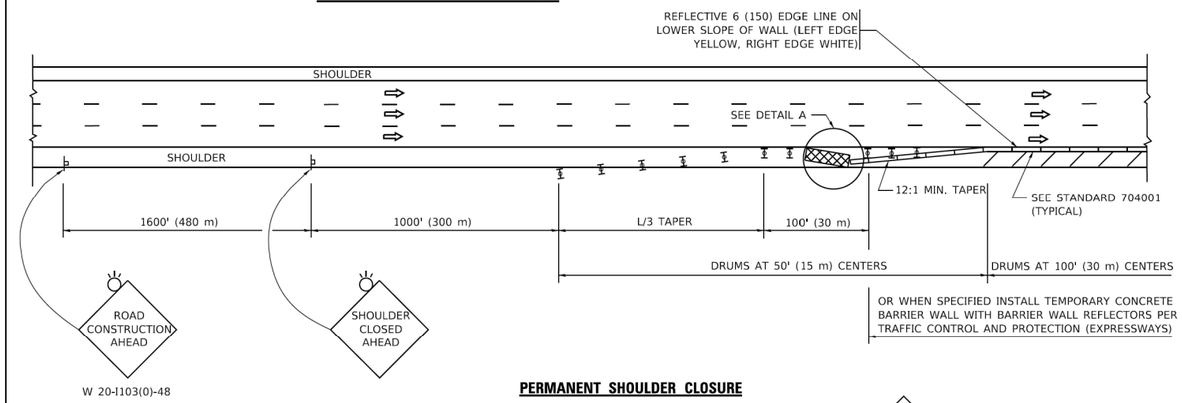

PERMANENT SHOULDER CLOSURE

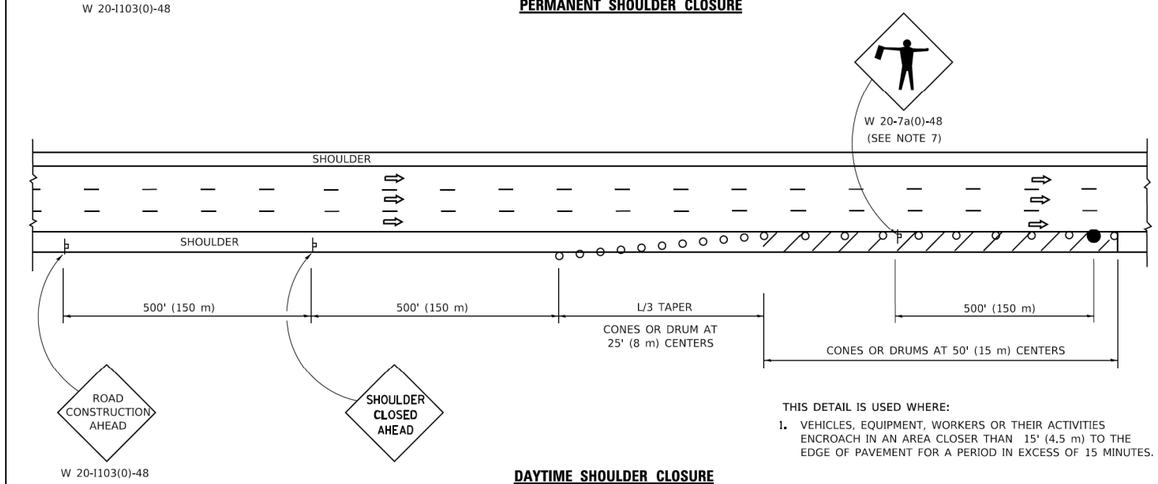

DAYTIME SHOULDER CLOSURE

THIS DETAIL IS USED WHERE:

1. VEHICLES, EQUIPMENT, WORKERS OR THEIR ACTIVITIES ENCROACH IN AN AREA CLOSER THAN 15' (4.5 m) TO THE EDGE OF PAVEMENT FOR A PERIOD IN EXCESS OF 15 MINUTES.

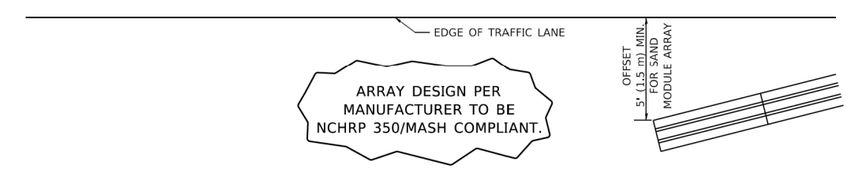

DETAIL "A"
IMPACT ATTENTUATOR, TEMPORARY
(SEE NOTE 5)

SYMBOLS

- ACTIVE WORK AREA
- SIGN ON PORTABLE OR PERMANENT SUPPORT
- FLAGGER WITH CONTROL SIGN
- TYPE II BARRICADE OR DRUM
- CONE, DRUM OR BARRICADE
- IMPACT ATTENUATOR OF TYPE AND TEST LEVEL SPECIFIED

GENERAL NOTES:

1. THE "L" DISTANCE EQUALS:

SPEED LIMIT	FORMULAS	
	METRIC	ENGLISH
45 mph (80 km/h) OR GREATER:	L=0.65(W)(S)	L=(W)(S)

W = WIDTH OF OFFSET IN FEET (METERS)
S = NORMAL POSTED SPEED MPH (KM/H)

2. TYPE II BARRICADES OR DRUMS ARE REQUIRED FOR ALL NIGHTTIME CLOSURES. TYPE II BARRICADES OR DRUMS WITH MONODIRECTIONAL STEADY BURN LIGHTS ARE REQUIRED FOR DELINEATING OBSTICLES, EXCAVATIONS, OR HAZARDS EXCEEDING 100 FT (30m) IN LENGTH AT NIGHT.
3. ALL SIGNS SHALL BE POST MOUNTED IF THE CLOSURE TIME EXCEEDS FOUR DAYS.
4. FLASHING LIGHTS SHALL BE USED DURING THE HOURS OF DARKNESS AND SHALL BE INSTALLED ABOVE THE FIRST TWO SETS OF SIGNS.
5. THE IMPACT ATTENTUATOR, TEMPORARY IS NOT REQUIRED WHEN THE TEMPORARY CONCRETE BARRIER WALL IS PROTECTED BY OR IS TIED INTO THE EXISTING GUARDRAIL. IF OFFSET IS LESS THAN 5 FEET USE NARROW USE TYPE DEVICE TO MEET NCHRP350/MASH.
6. AUTHORIZATION FROM THE DISTRICT'S BUREAU OF TRAFFIC IS REQUIRED FOR ALL FREEWAY CLOSURES.
7. THE FLAGGER AND FLAGGER SIGN ARE REQUIRED AT THE ABOVE WORK SITES WHEN:
   a. FOUR OR MORE WORK VEHICLES ENTER THE TRAFFIC LANES IN A ONE HOUR PERIOD.
   b. THE WORK AVTIVITY REQUIRES FREQUENT ENCROACHMENT INTO THE LANE OPEN TO TRAFFIC.

   THE FLAGGER SHALL BE STATIONED APPROXIMATELY 100' (30 m) TO 200' (60 m) IN ADVANCE OF THE WORKERS.
8. 12' MIN. WIDTH TANGENT SECTION
   16' MIN. WIDTH CURVE SECTION.

ALL DIMENSIONS ARE IN INCHES (MILLIMETERS) UNLESS OTHERWISE SHOWN.

MODEL: Default
FILE NAME: pw:\\IL084EBIDINTEG.illinois.gov:PWIDOT\Documents\IDOT Offices\District 1\Projects\DistStd22x34\CADData\CADsheets\tc17.dgn

TRANSYSTEMS	USER NAME = footemj	DESIGNED -	REVISED - S.P.B. 01-07	STATE OF ILLINOIS DEPARTMENT OF TRANSPORTATION	TRAFFIC CONTROL DETAILS FOR FREEWAY SHOULDER CLOSURES AND PARTIAL RAMP CLOSURES	F.A. RTE.	SECTION	COUNTY	TOTAL SHEETS	SHEET NO.
		DRAWN - D.W.S.	REVISED - S.P.B. 12-09						1201	866
	PLOT SCALE = 50.0000 ' / in.	CHECKED -	REVISED - M.D. 06-13				TC-17	CONTRACT NO.62R89		
	PLOT DATE = 3/4/2019	DATE - 11-96	REVISED - M.D. 01-18		SCALE: NONE SHEET 16 OF 22 SHEETS STA. TO STA.		ILLINOIS FED. AID PROJECT			

tc17.dgn 3/4/2019 10:41:43 AM User=footemj

SIGNING FOR FLAGGING OPERATIONS AT WORK ZONE OPENINGS

WORK ZONE EXIT OPENING

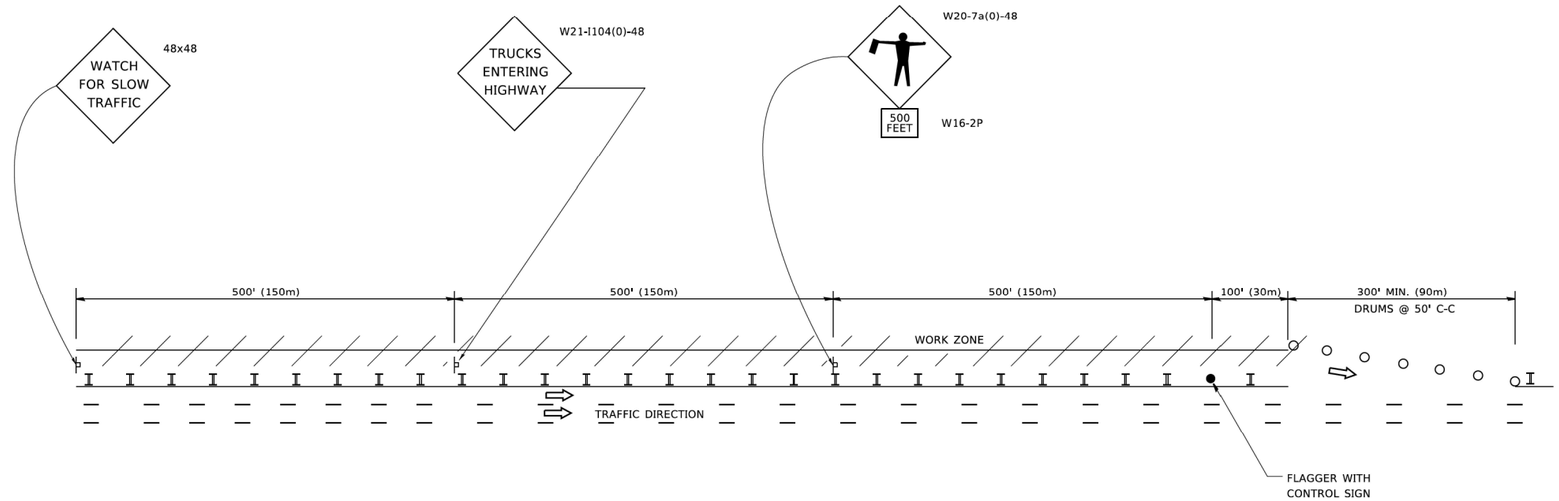

WORK ZONE ENTRY OPENING

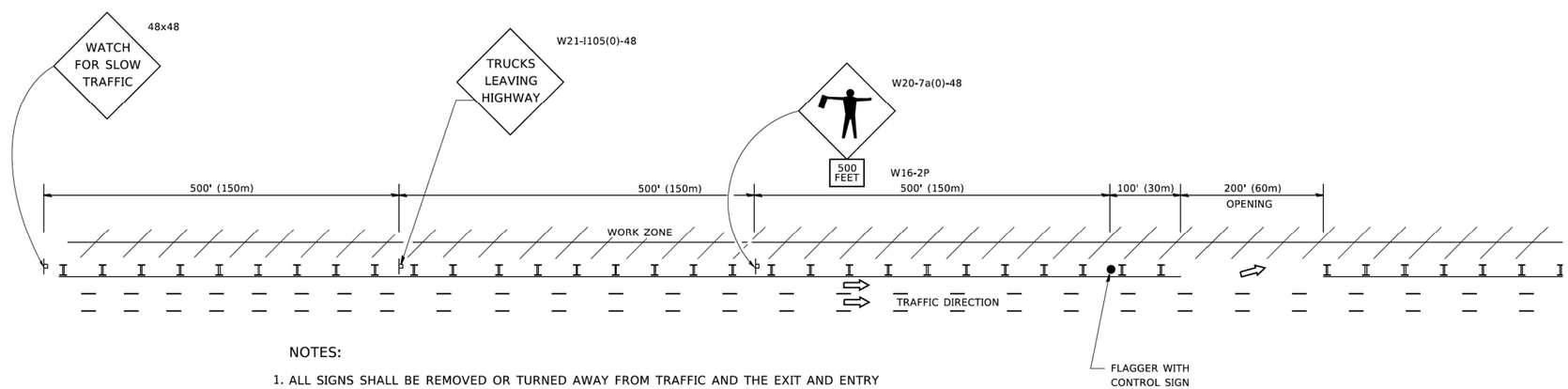

NOTES:

1. ALL SIGNS SHALL BE REMOVED OR TURNED AWAY FROM TRAFFIC AND THE EXIT AND ENTRY OPENINGS SHALL BE CLOSED WHEN THE FLAGGING OPERATION CEASES. NON OPERATING EQUIPMENT SHALL COMPLY WITH ARTICLE 701.11
2. WORK ZONE OPENINGS SHALL BE A MINIMUM OF ONE HALF MILE APART AND A MINIMUM OF ONE QUARTER MILE FROM ALL ENTRANCE AND EXIT RAMPS.
3. EXITING THE WORK ZONE AT ANY PLACE OTHER THAN AT A WORK ZONE EXIT OPENING WILL BE PROHIBITED.
4. ALL VEHICLES SHALL ENTER THE WORK ZONE AT ENTRY OPENINGS, USING THEIR TURN SIGNALS TO WARN MOTORISTS
5. FLAGGERS SHALL NOT STOP TRAFFIC OR DIRECT TRAFFIC INTO AN ADJACENT LANE.

ALL DIMENSIONS ARE IN INCHES (MILLIMETERS) UNLESS OTHERWISE SHOWN

MODEL: Default
FILE NAME: pw:\\IL084EBIDINTEG.illinois.gov:PWIDOT\Documents\IDOT Offices\District 1\Projects\DistStd22x34\CADData\CADsheets\tc18.dgn

TRANSYSTEMS

USER NAME = footemj	DESIGNED -	REVISED -	J.A.F. 02-06
	DRAWN -	REVISED -	S.P.B. 01-07
PLOT SCALE = 50.0000 ' / in.	CHECKED -	REVISED -	S.P.B. 12-09
PLOT DATE = 3/4/2019	DATE -	REVISED -	M.D.06-13

STATE OF ILLINOIS
DEPARTMENT OF TRANSPORTATION

FREEWAY /EXPRESSWAY SIGNING FOR FLAGGING OPERATIONS AT WORK ZONE OPENINGS ON FREEWAYS /EXPRESSWAYS

SCALE: NONE | SHEET 17 OF 22 SHEETS | STA. TO STA.

F.A. RTE.	SECTION	COUNTY	TOTAL SHEETS	SHEET NO.
			1201	867
	TC-18	CONTRACT NO.62R89		
		ILLINOIS	FED. AID PROJECT	

tc18.dgn 3/4/2019 10:44:51 AM User=footemi

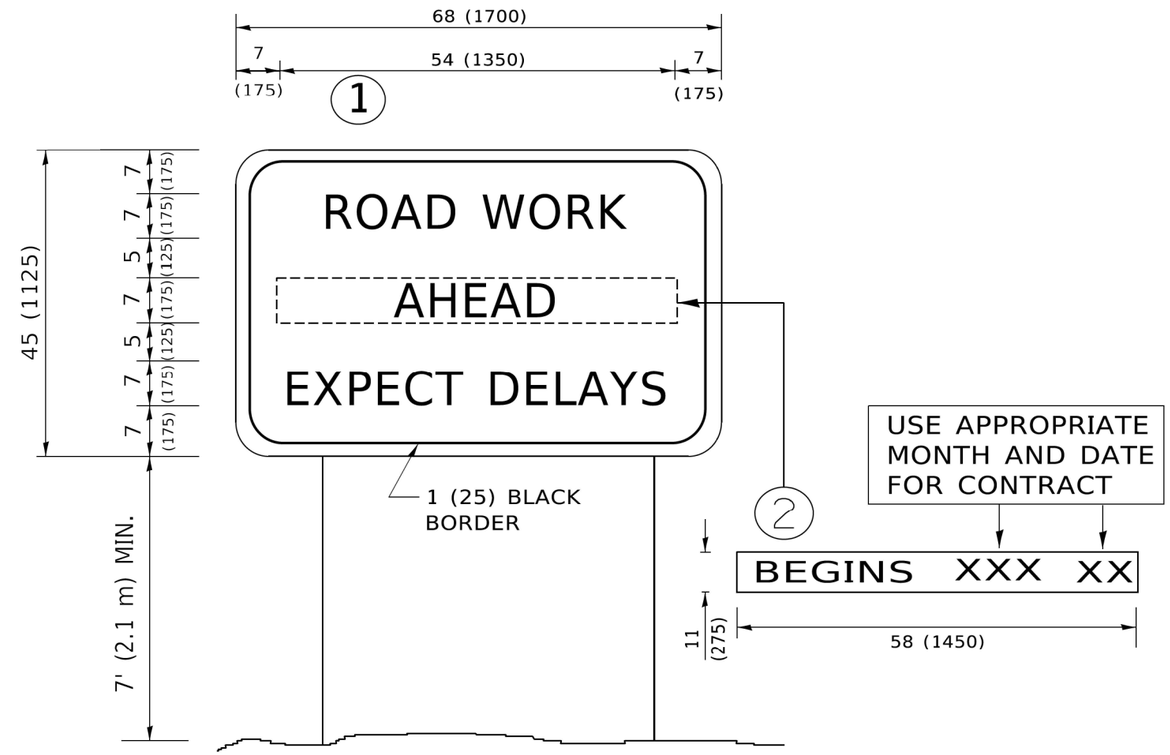

NOTES:

1. USE BLACK LETTERING ON ORANGE BACKGROUND.
2. ERECT SIGNS IN ADVANCE OF THE LOCATION FOR THE "ROAD CONSTRUCTION AHEAD" SIGN AT LOCATIONS AS DIRECTED BY THE ENGINEER.
3. ERECT SIGN (1) WITH INSTALLED PANEL (2) ONE WEEK PRIOR TO THE START OF CONSTRUCTION.
4. REMOVE PANEL (2) SOON AFTER THE START OF CONSTRUCTION.
5. SEE SPECIAL PROVISION FOR "TEMPORARY INFORMATION SIGNING" FOR ADDITIONAL INFORMATION.
6. ONE SIGN ASSEMBLY EQUALS 25.70 SQ. FT. (2.3 SQ. M.)
7. SHALL BE PAID FOR AS TEMPORARY INFORMATION SIGNING.

ALL DIMENSIONS ARE IN INCHES (MILLIMETERS) UNLESS OTHERWISE SHOWN.

MODEL: Default
FILE NAME: pw:\\IL084EBIDINTEG.illinois.gov:PWIDOT\Documents\IDOT Offices\District 1\Projects\Dist5\d22x34\CADData\CADsheets\tc22.dgn

TRANSYSTEMS

USER NAME = footemj	DESIGNED -	REVISED - R. MIRS 09-15-97	STATE OF ILLINOIS DEPARTMENT OF TRANSPORTATION	ARTERIAL ROAD INFORMATION SIGN
	DRAWN -	REVISED - R. MIRS 12-11-97		
PLOT SCALE = 50.0000 ' / in.	CHECKED -	REVISED - T. RAMMACHER 02-02-99		
PLOT DATE = 3/4/2019	DATE -	REVISED - C. JUCIUS 01-31-07		SCALE: NONE SHEET 18 OF 22 SHEETS STA. TO STA.

F.A. RTE.	SECTION	COUNTY	TOTAL SHEETS	SHEET NO.
			1201	868
TC-22		CONTRACT NO.62R89		
	ILLINOIS	FED. AID PROJECT		

tc22.dgn 3/4/2019 10:48:10 AM User=footemi

CENTER LANE CLOSURE

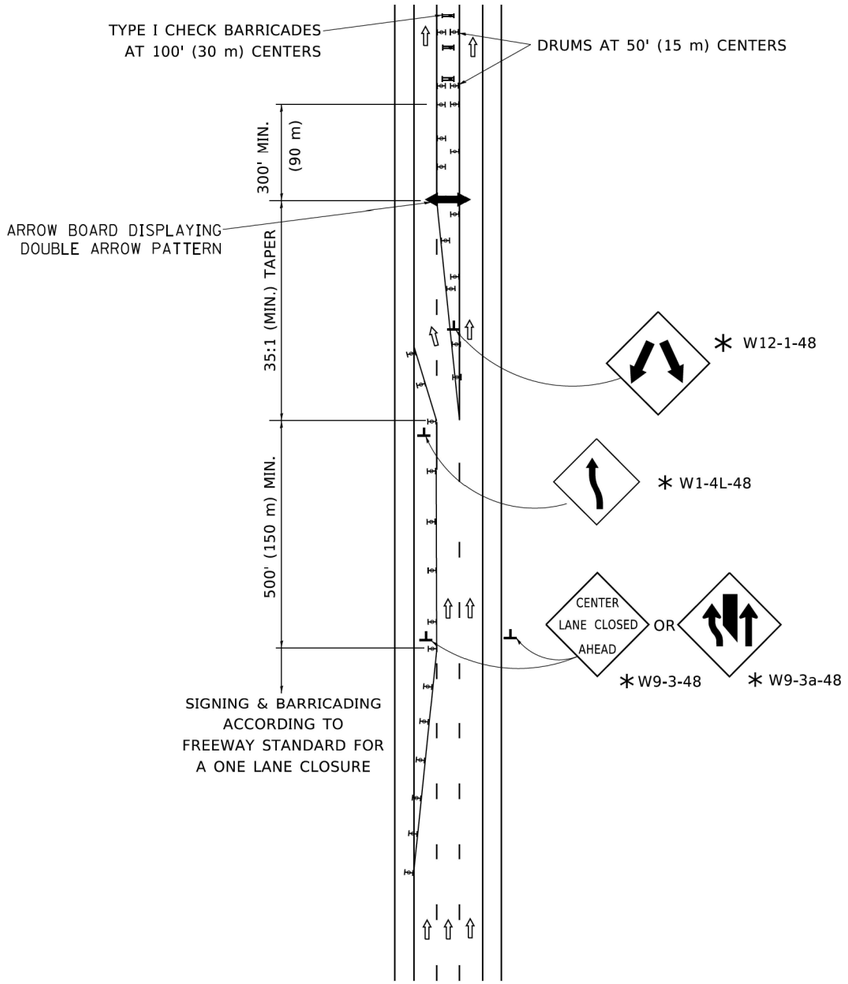

INSTALLATION SEQUENCE

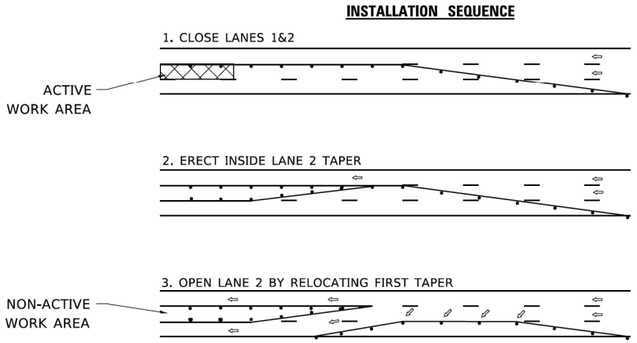

4. REMOVE CLOSURE IN REVERSE ORDER

NOTES:

1. DRUMS WITH STEADY BURN LIGHTS SHALL BE USED AT 50' (15 m) CENTERS ON ALL TAPERS AND TANGENTS IN ADVANCE OF WORK AREA.
2. CLOSURE SHALL BE USED ONLY FOR OPERATIONS LASTING 72 HOURS OR LESS.
3. CENTER LANE CLOSURE CONFIGURATION IS NOT TO BE USED WITH WORKERS PRESENT.

SHOULDER LANE

NOTE:
CLOSURE SHALL BE USED ONLY FOR OPERATIONS LASTING 72 HOURS OR LESS.

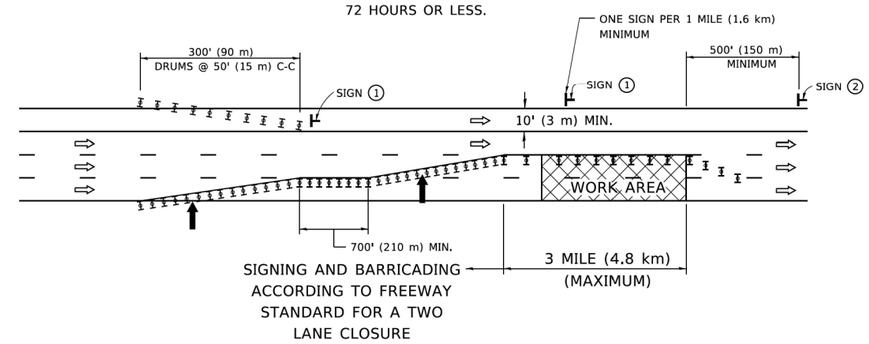

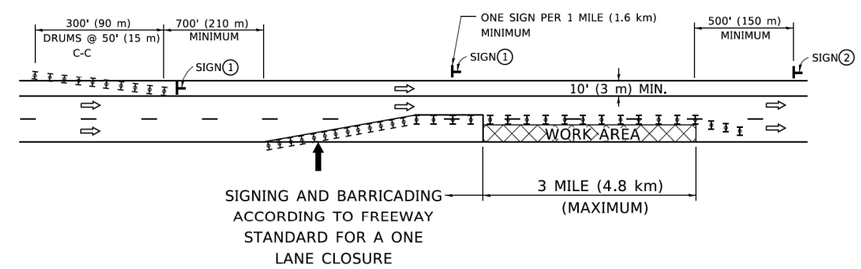

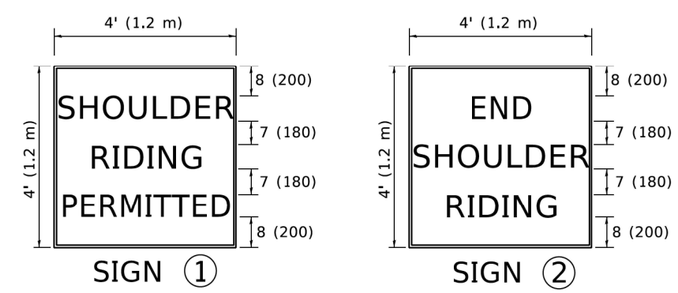

6 (150) SERIES "C" LEGEND
BLACK LEGEND
WHITE REFLECT. BACKGROUND
1 (25) BORDER

SYMBOLS

- DIRECTION OF TRAFFIC
- ARROWBOARD
- ACTIVE WORK AREA
- SIGN ON PORTABLE OR PERMANENT SUPPORT *
- TYPE II BARRICADE, OR DRUM WITH MONO-DIRECTIONAL STEADY BURN LIGHT

ALL DIMENSIONS ARE IN INCHES (MILLIMETERS) UNLESS OTHERWISE SHOWN

* ALL SIGNS SHALL BE MOUNTED AT A MINIMUM HEIGHT OF 5' (1.5 m).

MODEL: Default
FILE NAME: pw:\\IL084EBIDINTEG.illinois.gov:PWIDOT\Documents\IDOT Offices\District 1\Projects\Dist5\d22x34\CADData\CADsheets\tc25.dgn

TRANSYSTEMS

USER NAME = footemj	DESIGNED -	REVISED -	J.A.F. 04-03
	DRAWN -	REVISED -	S.P.B. 01-07
PLOT SCALE = 50.0000 ' / in.	CHECKED -	REVISED -	S.P.B. 12-09
PLOT DATE = 3/4/2019	DATE -	REVISED -	

STATE OF ILLINOIS
DEPARTMENT OF TRANSPORTATION

TRAFFIC CONTROL DETAILS FOR FREEWAY
CENTER LANE CLOSURE SHOULDER LANE

SCALE: NONE | SHEET 19 OF 22 SHEETS | STA. TO STA.

F.A. RTE.	SECTION	COUNTY	TOTAL SHEETS	SHEET NO.
			1201	869
TC-25		CONTRACT NO.62R89		
		ILLINOIS	FED. AID PROJECT	

tc25.dgn 3/4/2019 10:57:58 AM User=footemj

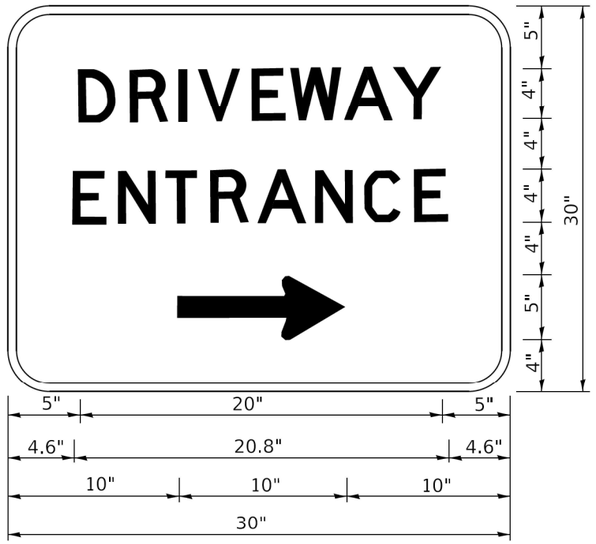

3.0" RADIUS, 0.5" BORDER, WHITE ON GREEN; REFLECTORIZED
"DRIVEWAY" D; "ENTRANCE" D; STANDARD ARROW CUSTOM 12.0" x 5.0"

NOTES:

1. HALF OF THE SIGNS WILL REQUIRE A LEFT HAND FACING ARROW.
2. TWO SIGNS SHALL BE USED AT EACH COMMERCIAL ENTRANCE PLACED BACK-TO-BACK: ONE WITH A RIGHT HAND ARROW (SHOWN) SHALL BE PLACED ON THE NEAR RIGHT SIDE THE DRIVEWAY AND ONE WITH A LEFT HAND ARROW SHALL BE PLACED ON THE FAR LEFT SIDE OF THE DRIVEWAY.
3. SIGNS TO BE PAID FOR AS ITEM "TEMPORARY INFORMATION SIGNING".

STANDARD DESIGN FOR MILE POST

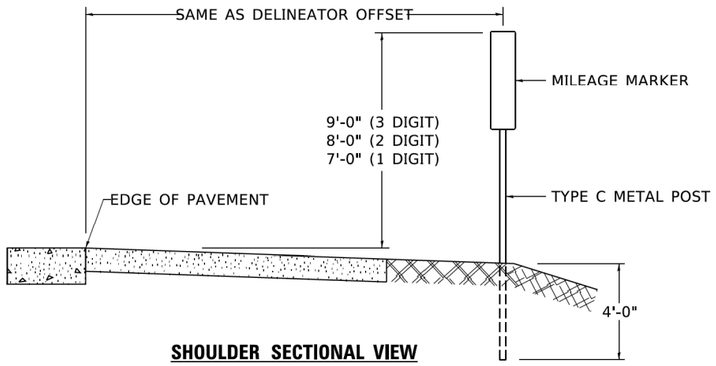

SHOULDER SECTIONAL VIEW

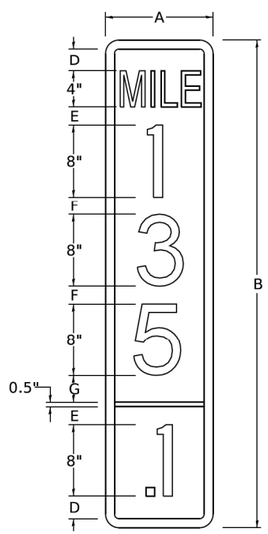

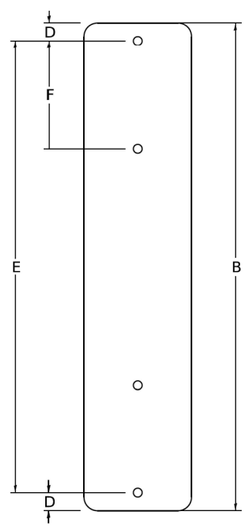

SIGN SIZE	DIMENSIONS							
	A	B	C	D	E	F	G	DIGIT
12 x 24	12.0	24.0	1.5	1.5	1.5	N/A	1.5	1
12 x 36	12.0	36.0	1.5	2.0	2.0	2.0	1.5	2
12 x 48	12.0	48.0	1.5	2.5	2.0	2.0	2.5	3

SIGN SIZE	SERIES LINES					BORDER	BLANK STD.
	1	2	3	4	5		
12 x 24	4C	8D	4C	N/A	N/A	0.5	B9-1224
12 x 36	4C	8D	8D	4C	N/A	0.5	B9-1236
12 x 48	4C	8D	8D	8D	4C	0.5	B9-1248

BLANK	A	B	C	D	E	F
B9-1224	12.0	24.0	1.5	2.0	20.0	N/A
B9-1236	12.0	36.0	1.5	2.0	32.0	12.0
B9-1248	12.0	48.0	1.5	2.0	44.0	12.0

BORDER AND RADIUS LAYOUT

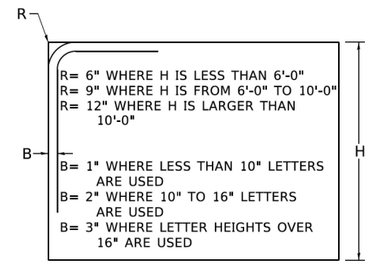

MAJOR GUIDE SIGN LAYOUT

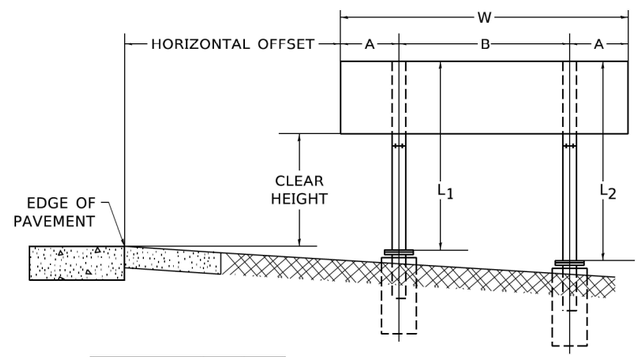

NUMBER OF STEEL SUPPORTS	A	B
2	.2 W	.6 W
3	.15 W	.35 W
4	.125 W	.25 W
5	.1 W	.2 W

"L_1 IS THE LENGTH OF SUPPORT, NOT INCLUDING THE STUB PROJECTION, CLOSEST TO THE EDGE OF THE PAVEMENT.

"A" IS THE DISTANCE FROM THE SIGN EDGE TO THE CENTERLINE OF THE NEAREST SUPPORT. "B" IS THE DISTANCE BETWEEN CENTERLINES OF SUPPORTS.

GORE SIGNS

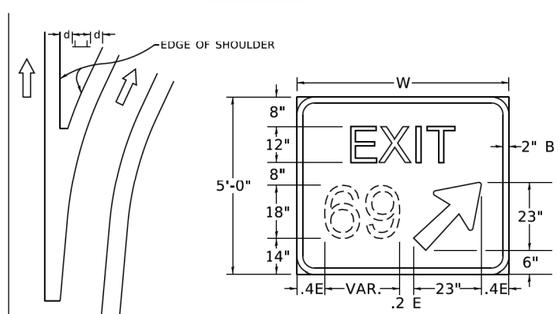

DIGITS	W	d
1 OR 2	6'-0"	2'-0"
3	7'-6"	1'-3"
4 OR 5	9'-0"	1'-0"

E= WIDTH - VAR. - 23"

STANDARD ARROWS FOR INTERSTATE GUIDE SIGNS

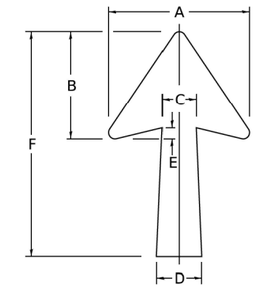

ARROW SYMBOL	A	B	C	D	E	F	R
24¼ x 15⅛	15⅛	11 9/16	3¾	5	1 9/16	24¼	13/16
29¼ x 18¼	18¼	14	4½	6	1½	29¼	¾
35⅝ x 22¼	22¼	17	5⅜	7⅛	1¾	35⅝	1
18¼ x 11¼	11¼	8¾	3⅛	3⅞		18¼	

NOTE: D & F ARE RECOMMENDED DIMENSIONS. TAPER SHOULD BE HELD CONSTANT FOR LONGER OR SHORTER SHAFT LENGTHS

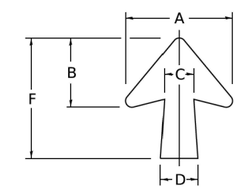

ARROW SYMBOL	A	B	C	D	E	F	R
17¼ x 14¼	14¼	9 13/16	3⅜	4½	15/16	17¼	¾
20¼ x 17¼	17¼	11¾	4⅜	5⅝	1½	20¼	
25 x 21⅞	21⅞	14¼	5	6¾	1¾	25	1
9 9/16 x 8 7/16	8 7/16	5 7/16	2 5/16	2 15/16		9 9/16	½

DOWN ARROWS

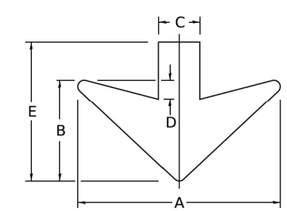

ARROW SYMBOL	A	B	C	D	E	R
16½ x 24	24	12	5	1½	16½	¾
22 x 32	32	16	6½	3	22	1

TRANSYSTEMS

USER NAME = footemj	DESIGNED -	REVISED -	02-04-2009
	DRAWN -	REVISED -	
PLOT SCALE = 50.0000 ' / in.	CHECKED -	REVISED -	
PLOT DATE = 3/4/2019	DATE - 03-08-1984	REVISED -	

STATE OF ILLINOIS
DEPARTMENT OF TRANSPORTATION

MILE POST MARKERS – GORE SIGNS
MAJOR GUIDE SIGN LAYOUT – ARROWS

SCALE: NONE | SHEET 21 OF 22 SHEETS | STA. TO STA.

F.A. RTE.	SECTION	COUNTY	TOTAL SHEETS	SHEET NO.
			1201	871
TC-27 (TS-2341-1)		CONTRACT NO.62R89		
		ILLINOIS	FED. AID PROJECT	

MODEL: Default
FILE NAME: pw:\\IL084EBIDINTEG.illinois.gov:PWIDOT\Documents\IDOT Offices\District 1\Projects\District22x34\CADData\CADsheets\tc27.dgn

tc27.dgn 3/4/2019 11:01:14 AM User=footemj

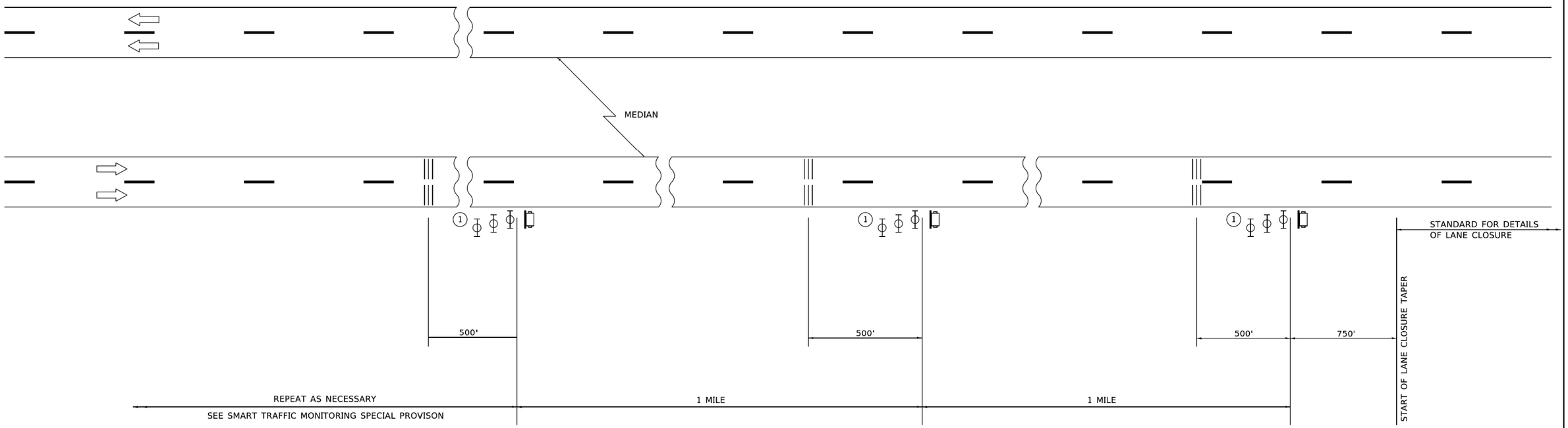

SYMBOLS

PORTABLE CHANGEABLE MESSAGE SIGN

TEMPORARY RUMBLE STRIP (SPECIAL)

TYPE II BARRICADES, DRUMS, OR VERTICAL BARRICADES WITH MONODIRECTIONAL FLASHING LIGHT.

(1) THREE TYPE II BARRICADES, DRUMS, OR VERTICAL BARRICADES AT 25' (8 m) CENTERS.

GENERAL NOTE:

THIS DETAIL IS TO BE USED IN CONJUNCTION WITH SMART TRAFFIC MONITORING SYSTEM AND TEMPORARY RUMBLE STRIP (SPECIAL) SPECIAL PROVISIONS.

TRAFFIC CONTROL SHOWN IN THIS DETAIL IS TO BE PROVIDED IN ADDITION TO ANY TEMPORARY TRAFFIC CONTROL SHOWN ON STATE STANDARDS, DISTRICT DETAILS, AND MAINTENANCE OF TRAFFIC PLANS.

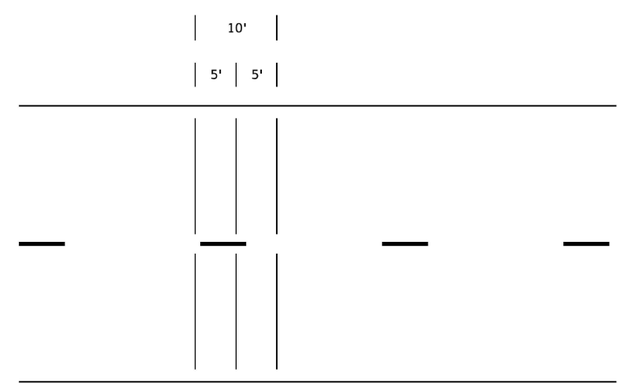

TEMPORARY RUMBLE STRIP (SPECIAL)

MODEL: Default
FILE NAME: pw:\\ildot-pw.bentley.com:PWIDOT\Documents\IDOT Offices\District 1\Projects\DistStd22x34\CADData\CADsheets\tc33.dgn

TRANSYSTEMS

USER NAME = Lawrence.DeManche	DESIGNED -	REVISED - K. SMITH 11-18-22	
	DRAWN -	REVISED -	
PLOT SCALE = 100.0000 ' / In.	CHECKED -	REVISED -	
PLOT DATE = 11/18/2022	DATE -	REVISED -	

STATE OF ILLINOIS
DEPARTMENT OF TRANSPORTATION

SMART TRAFFIC MONITORING SYSTEM
TYPICAL LAYOUT

SCALE: NONE | SHEET 22 OF 22 SHEETS | STA. | TO STA.

F.A. RTE.	SECTION	COUNTY	TOTAL SHEETS	SHEET NO.
			1201	872
TC–33		CONTRACT NO.62R89		
	ILLINOIS	FED. AID PROJECT		

NOTE:

1. PROPOSED TOPSOIL DEPTHS PLACED VARY. 6" DEPTH FOR REGION OF PROPOSED TOPSOIL IS SHOWN ON CROSS SECTIONS. HOWEVER, EROSION CONTROL AND LANDSCAPING PLANS SHOW PROPOSED TOPSOIL AND OTHER MATERIALS USED IN PLACING PROPOSED TOPSOIL TO APPROPRIATE DEPTHS DEPENDING ON THE LOCATION OF THE GRADING.
2. PROPOSED DRAINAGE ELEMENTS SHOWN IN CROSS SECTION ARE NOT SHOWN CONSTRUCTED IN THE CORRECT STAGE. PROPOSED DRAINAGE ELEMENTS SHOWN IN CROSS SECTION ARE ONLY REPRESENTATIVE OF THE FINAL CONDITION. PLEASE REFER TO DRAINAGE PLANS FOR CONSTRUCTION STAGING AND TIMING OF INSTALLATION OF PROPOSED DRAINAGE ELEMENTS.
3. CUT AND FILL END AREAS SHOWN ON THE CROSS SECTIONS DO NOT QUANTIFY THE REMOVAL AND DISPOSAL OF UNSUITABLE MATERIAL IN THE UNDERCUT AREAS NOR THE AGGREGATE SUBGRADE IMPROVEMENT QUANTITIES FOR FILLING IN THE UNDERCUT AREAS. SEE THE EARTHWORK SCHEDULE FOR UNDERCUT RELATED QUANTITIES.

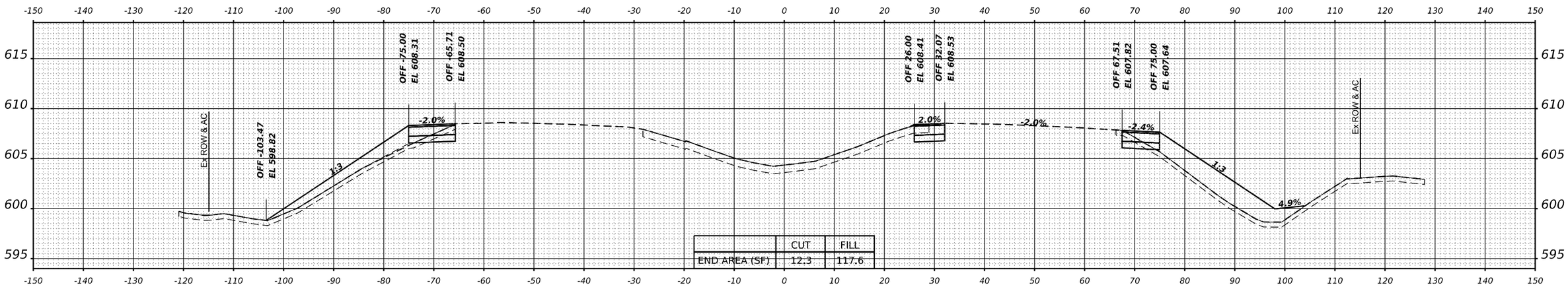

	CUT	FILL
END AREA (SF)	12.3	117.6

STA 520+00.00

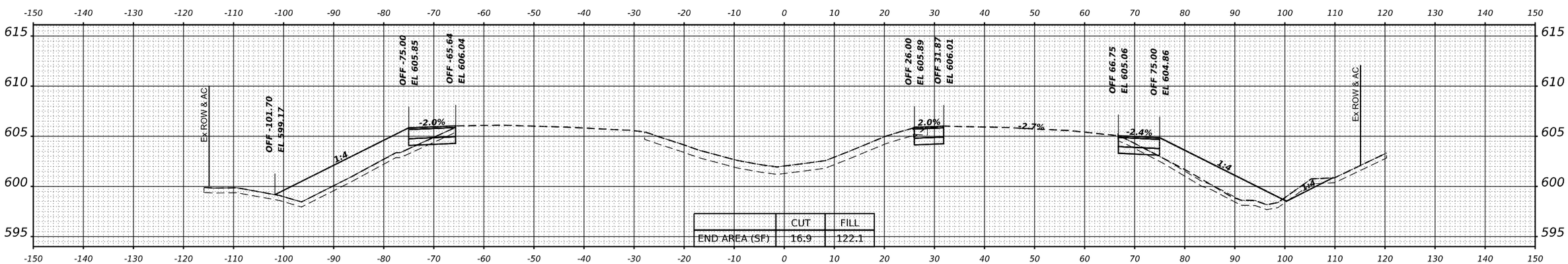

	CUT	FILL
END AREA (SF)	16.9	122.1

STA 519+00.00

FINAL SURVEY		BY	DATE
NOTE BOOK	SURVEYED		
	PLOTTED		
	TEMPLATE		
	AREAS		
NO.	AREAS CHECKED		

ORIGINAL SURVEY		BY	DATE
NOTE BOOK	SURVEYED		
	PLOTTED		
	TEMPLATE		
	AREAS		
NO.	AREAS CHECKED		

MODEL: BL_PR_I80_W - 519+00.00 [Sheet]
FILE NAME: pw://transystems-pw.bentley.com:transyscomp-pw1-hosted/Documents/Projects_2018/CH401/401180022/02-TranSystems/CAD/05-3D/02-Container/PRE-STAGE/01TSC-CONTAINER_PR_ROADWAY_PRE-STAGE-P4.dgn

TRANSYSTEMS

USER NAME = amkluver	DESIGNED - VLJ	REVISED -	
	DRAWN - MBM	REVISED -	
PLOT SCALE = 0.16666633 ' / in.	CHECKED - JMG	REVISED -	
PLOT DATE = 10/5/2023	DATE - 6/26/23	REVISED -	

STATE OF ILLINOIS
DEPARTMENT OF TRANSPORTATION

CROSS SECTIONS PRE-STAGE
I-80

SCALE: 10:H 5:V | SHEET 1 OF 62 SHEETS | STA. 519+00 — 520+00.00

F.A.I. RTE.	SECTION	COUNTY	TOTAL SHEETS	SHEET NO.
I-80	FAI 80 22 BR	WILL	1201	873
		CONTRACT NO. 62R89		
	ILLINOIS	FED. AID PROJECT		

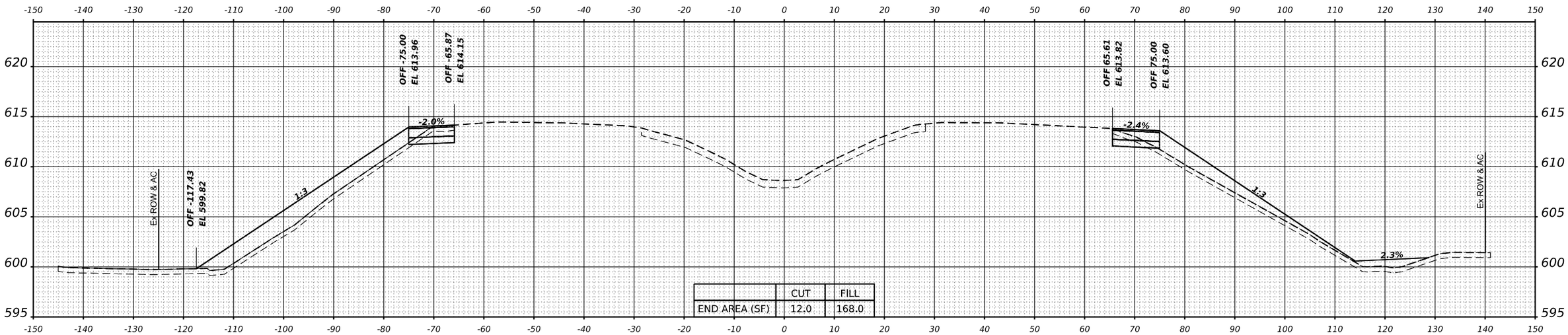

STA 522+00.00

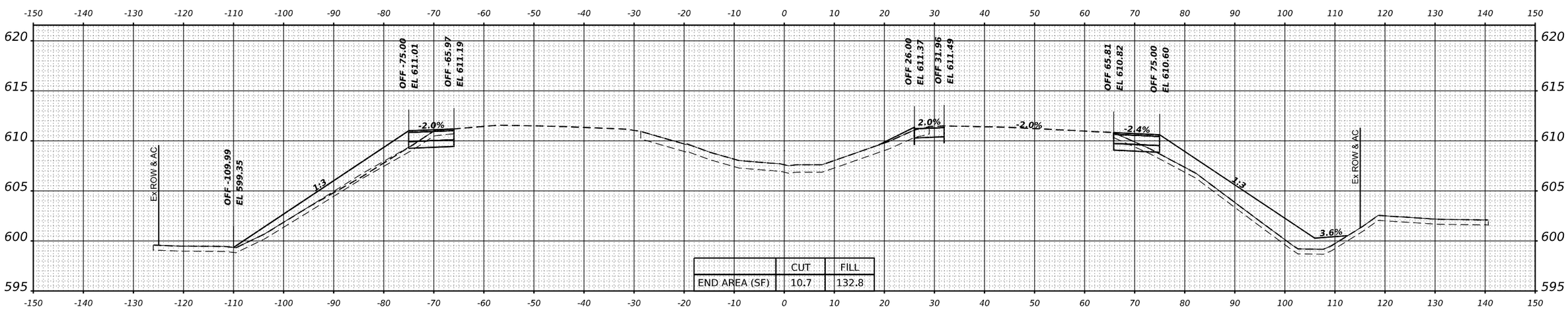

STA 521+00.00

FINAL SURVEY		BY	DATE
NOTE BOOK	SURVEYED		
	PLOTTED		
	TEMPLATE		
	AREAS		
NO.	AREAS CHECKED		

ORIGINAL SURVEY		BY	DATE
NOTE BOOK	SURVEYED		
	PLOTTED		
	TEMPLATE		
	AREAS		
NO.	AREAS CHECKED		

MODEL: BL_PR_I80_W - 521+00.00 [Sheet]
FILE NAME: pw://transystems-pw.bentley.com:transyscorp-pw1-hosted/Documents/Projects_2018/CH491/401180022/02-TranSystems/CAD/05-3D/02-Container/PRE-STAGE/D1TSC-CONTAINER_PR_ROADWAY_PRE-STAGE-P4.dgn

TRANSYSTEMS

USER NAME = amkluver	DESIGNED - VLJ	REVISED -	
	DRAWN - MBM	REVISED -	
PLOT SCALE = 0.16666633 ' / in.	CHECKED - JMG	REVISED -	
PLOT DATE = 10/5/2023	DATE - 6/26/23	REVISED -	

STATE OF ILLINOIS
DEPARTMENT OF TRANSPORTATION

CROSS SECTIONS PRE–STAGE
I–80

SCALE: 10:H 5:V | SHEET 2 OF 62 SHEETS | STA. 521+00.00 522+00.00

F.A.I. RTE.	SECTION	COUNTY	TOTAL SHEETS	SHEET NO.
I-80	FAI 80 22 BR	WILL	1201	874
		CONTRACT NO. 62R89		
	ILLINOIS	FED. AID PROJECT		

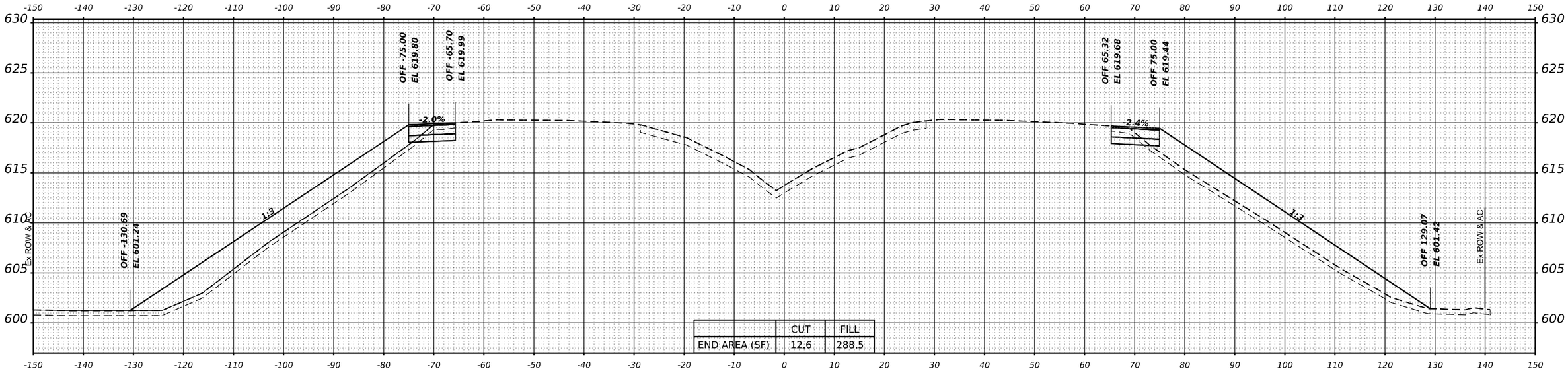

	CUT	FILL
END AREA (SF)	12.6	288.5

STA 524+00.00

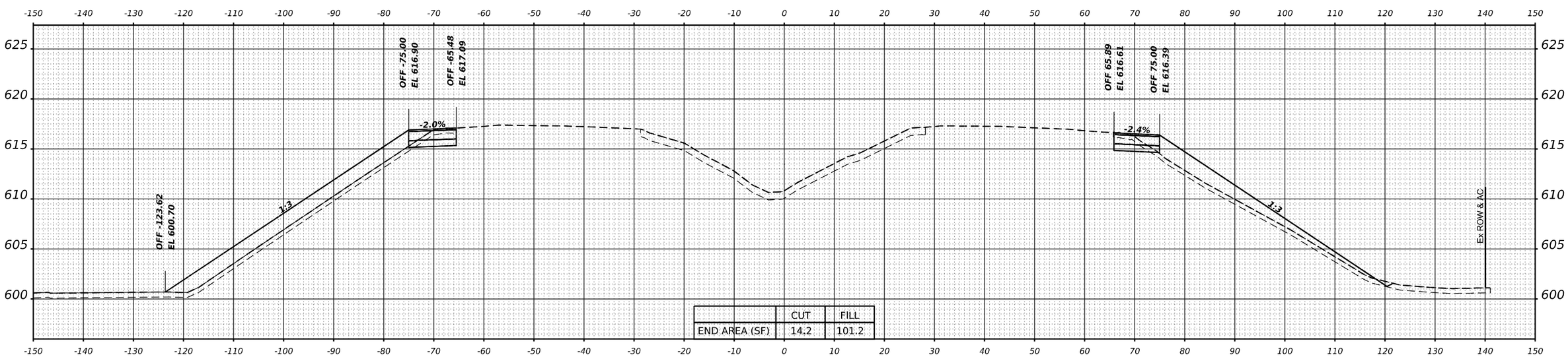

	CUT	FILL
END AREA (SF)	14.2	101.2

STA 523+00.00

FINAL SURVEY		BY	DATE
NOTE BOOK	SURVEYED		
	PLOTTED		
	TEMPLATE		
	AREAS		
	AREAS CHECKED		
NO.			

ORIGINAL SURVEY		BY	DATE
NOTE BOOK	SURVEYED		
	PLOTTED		
	TEMPLATE		
	AREAS		
	AREAS CHECKED		
NO.			

MODEL: BL_PR_I80_W - 523+00.00 [Sheet]
FILE NAME: pw://transystems-pw.bentley.com:transyscorp-pw1-hosted/Documents/Projects_2018/CH401/401180022/02-TranSystems/CAD/05-3D/02-Container/PRE-STAGE/DITSC-CONTAINER_PR_ROADWAY_PRE-STAGE-P4.dgn

TRANSYSTEMS

USER NAME = amkluver	DESIGNED - VLJ	REVISED -	
	DRAWN - MBM	REVISED -	
PLOT SCALE = 0.16666633 ' / in.	CHECKED - JMG	REVISED -	
PLOT DATE = 10/5/2023	DATE - 6/26/23	REVISED -	

STATE OF ILLINOIS
DEPARTMENT OF TRANSPORTATION

CROSS SECTIONS PRE-STAGE
I-80

SCALE: 10:H 5:V | SHEET 3 OF 62 SHEETS | STA. 523+00.00 524+00.00

F.A.I. RTE.	SECTION	COUNTY	TOTAL SHEETS	SHEET NO.
I-80	FAI 80 22 BR	WILL	1201	875
		CONTRACT NO. 62R89		
		ILLINOIS	FED. AID PROJECT	

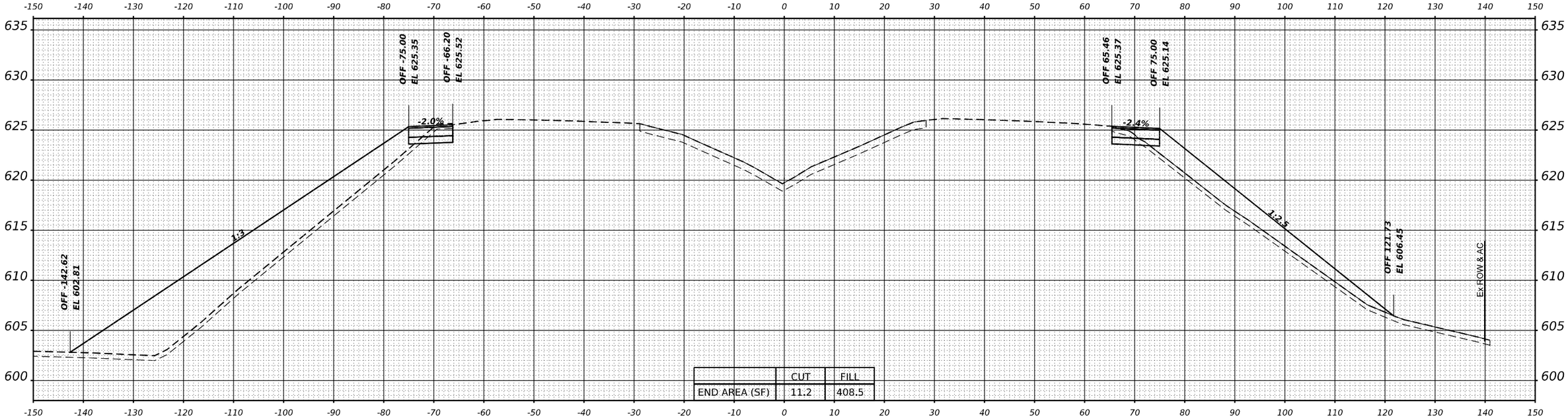

	CUT	FILL
END AREA (SF)	11.2	408.5

STA 526+00.00

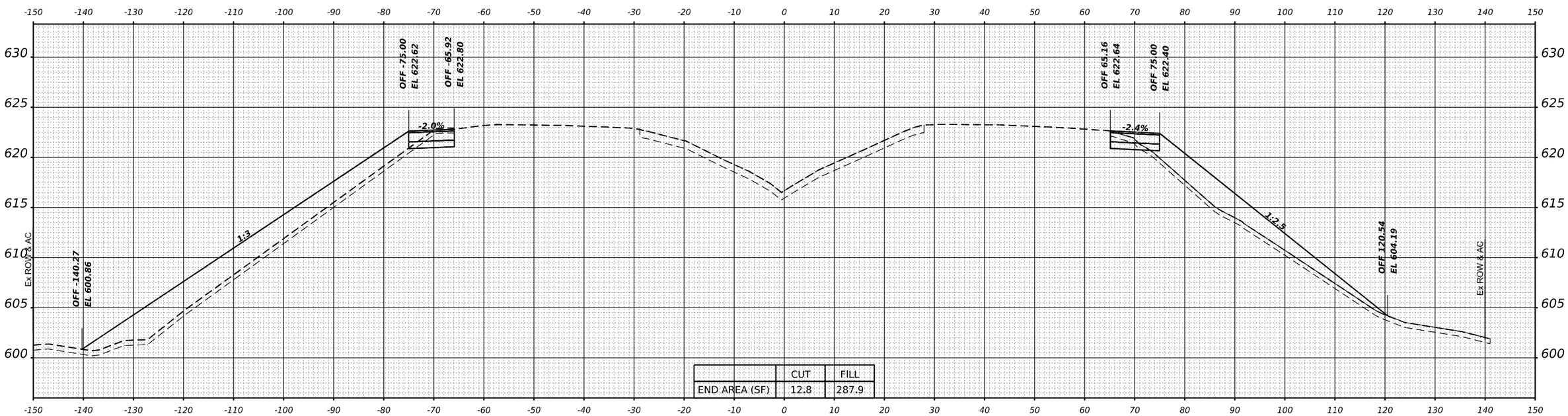

	CUT	FILL
END AREA (SF)	12.8	287.9

STA 525+00.00

FINAL SURVEY	BY	DATE
SURVEYED		
PLOTTED		
TEMPLATE		
AREAS		
AREAS CHECKED		
NOTE BOOK		
NO.		

ORIGINAL SURVEY	BY	DATE
SURVEYED		
PLOTTED		
TEMPLATE		
AREAS		
AREAS CHECKED		
NOTE BOOK		
NO.		

MODEL: BL_PR_890_W-525+00.00 [Sheet]
FILE NAME: pw://transystems-pw.bentley.com:transyscorp-pw14-hosted/Documents/Projects_2018/CH401/401180022/02-TranSystems/CAD/05-3D/02-Container/PRE-STAGE/D1TSC-CONTAINER_PR_ROADWAY_PRE-STAGE-P4.dgn

TRANSYSTEMS

USER NAME = amkluver	DESIGNED - VLJ	REVISED -	
	DRAWN - MBM	REVISED -	
PLOT SCALE = 0.16666633 ' / in.	CHECKED - JMG	REVISED -	
PLOT DATE = 10/5/2023	DATE - 6/26/23	REVISED -	

STATE OF ILLINOIS
DEPARTMENT OF TRANSPORTATION

CROSS SECTIONS PRE-STAGE
I-80

SCALE: 10:H 5:V | SHEET 4 OF 62 SHEETS | STA. 525+00.00 526+00.00

F.A.I. RTE.	SECTION	COUNTY	TOTAL SHEETS	SHEET NO.
I-80	FAI 80 22 BR	WILL	1201	876

CONTRACT NO. 62R89

ILLINOIS | FED. AID PROJECT

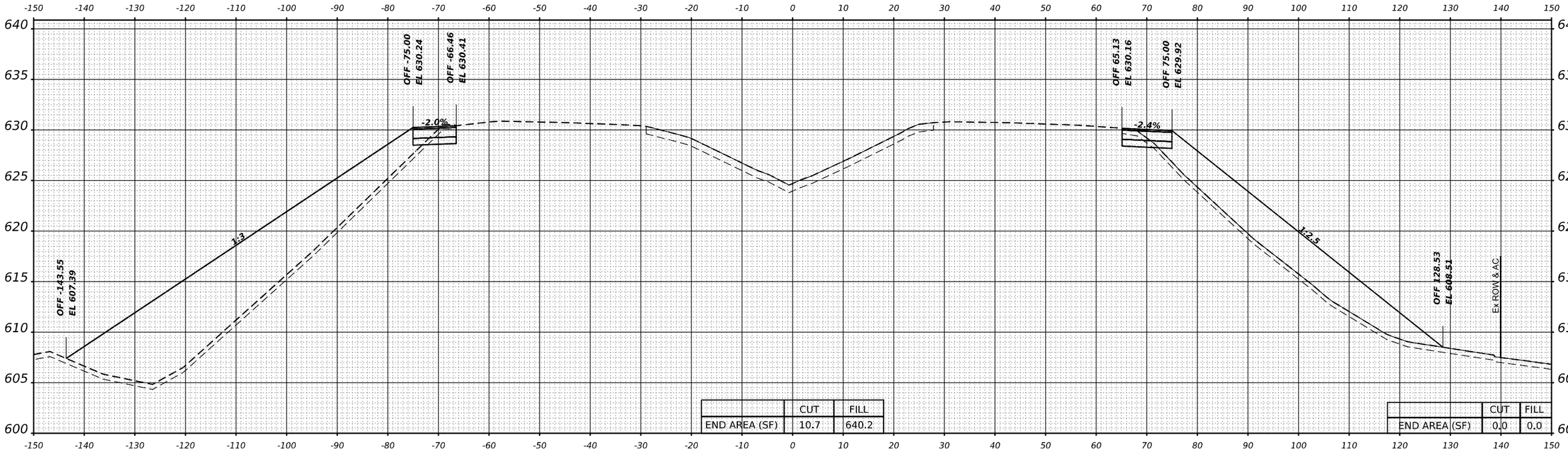

	CUT	FILL
END AREA (SF)	10.7	640.2

	CUT	FILL
END AREA (SF)	0.0	0.0

STA 528+00.00

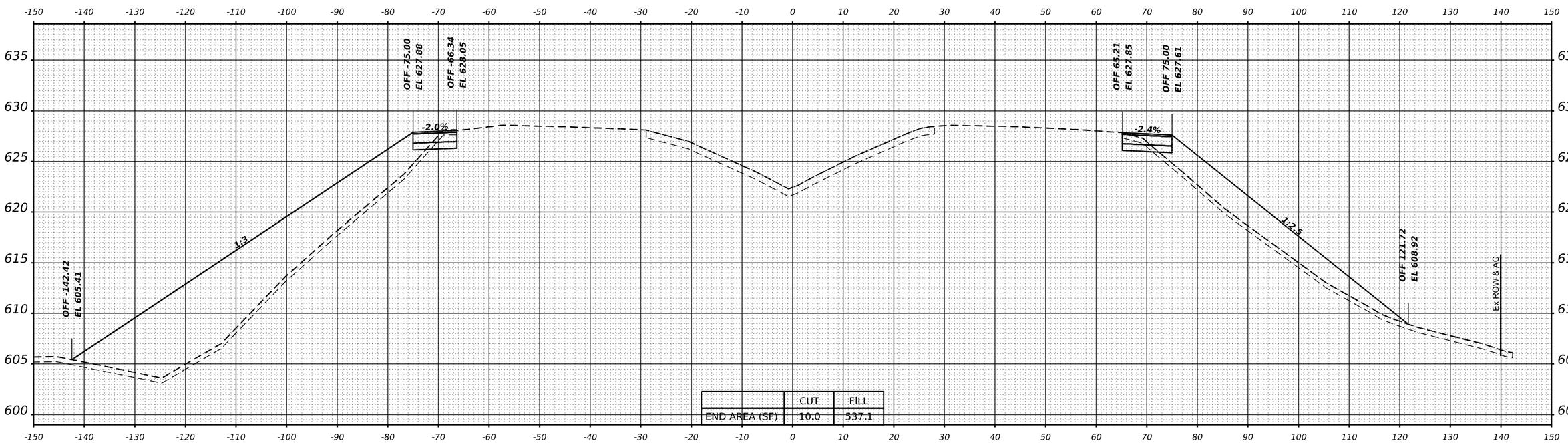

	CUT	FILL
END AREA (SF)	10.0	537.1

STA 527+00.00

FINAL SURVEY	BY	DATE
SURVEYED		
PLOTTED		
TEMPLATE		
AREAS		
AREAS CHECKED		
NOTE BOOK		
NO.		

ORIGINAL SURVEY	BY	DATE
SURVEYED		
PLOTTED		
TEMPLATE		
AREAS		
AREAS CHECKED		
NOTE BOOK		
NO.		

MODEL: BL_PR_I80_W - 527+00.00 [Sheet]
FILE NAME: pw://transystems-pw.bentley.com:transyscorp-pw1-hosted/Documents/Projects_2018/CH491/401180022/02-TranSystems/CAD/05-3D/02-Container/PRE-STAGE/D1TSC-CONTAINER_PR_ROADWAY_PRE-STAGE-P4.dgn

TRANSYSTEMS

USER NAME = amkluver	DESIGNED - VLJ	REVISED -	
	DRAWN - MBM	REVISED -	
PLOT SCALE = 0.16666633 ' / in.	CHECKED - JMG	REVISED -	
PLOT DATE = 10/5/2023	DATE - 6/26/23	REVISED -	

STATE OF ILLINOIS
DEPARTMENT OF TRANSPORTATION

CROSS SECTIONS PRE-STAGE
I-80

SCALE: 10:H 5:V | SHEET 5 OF 62 SHEETS | STA. 527+00.00 528+00.00

F.A.I. RTE.	SECTION	COUNTY	TOTAL SHEETS	SHEET NO.
I-80	FAI 80 22 BR	WILL	1201	877
		CONTRACT NO. 62R89		
		ILLINOIS	FED. AID PROJECT	

FINAL SURVEY		BY	DATE
NOTE BOOK NO.	SURVEYED		
	PLOTTED		
	TEMPLATE		
	AREAS		
	AREAS CHECKED		

ORIGINAL SURVEY		BY	DATE
NOTE BOOK NO.	SURVEYED		
	PLOTTED		
	TEMPLATE		
	AREAS		
	AREAS CHECKED		

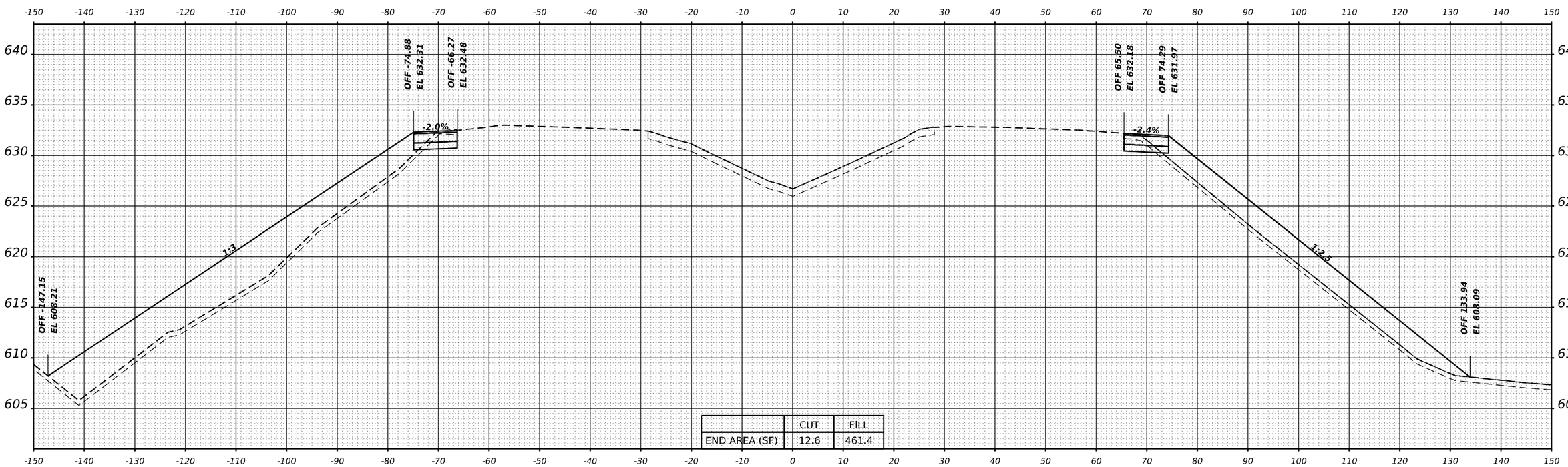

	CUT	FILL
END AREA (SF)	12.6	461.4

STA 529+00.00

MODEL: BL_PR_I80_W - 529+00.00 [Sheet]
FILE NAME: pw://transystems-pw.bentley.com:transyscorp-pw1-hosted/Documents/Projects_2018/CH401/401180022/02-TranSystems/CAD/05-3D/02-Container/PRE-STAGE/D1TSC-CONTAINER_PR_ROADWAY_PRE-STAGE-P4.dgn

TRANSYSTEMS

USER NAME = amkluver	DESIGNED - VLJ	REVISED -	
	DRAWN - MBM	REVISED -	
PLOT SCALE = 0.16666633 ' / in.	CHECKED - JMG	REVISED -	
PLOT DATE = 10/5/2023	DATE - 6/26/23	REVISED -	

STATE OF ILLINOIS
DEPARTMENT OF TRANSPORTATION

CROSS SECTIONS PRE-STAGE
I-80

SCALE: 10:H 5:V | SHEET 6 OF 62 SHEETS | STA. 529+00.00

F.A.I. RTE.	SECTION	COUNTY	TOTAL SHEETS	SHEET NO.
I-80	FAI 80 22 BR	WILL	1201	878
		CONTRACT NO. 62R89		
	ILLINOIS	FED. AID PROJECT		

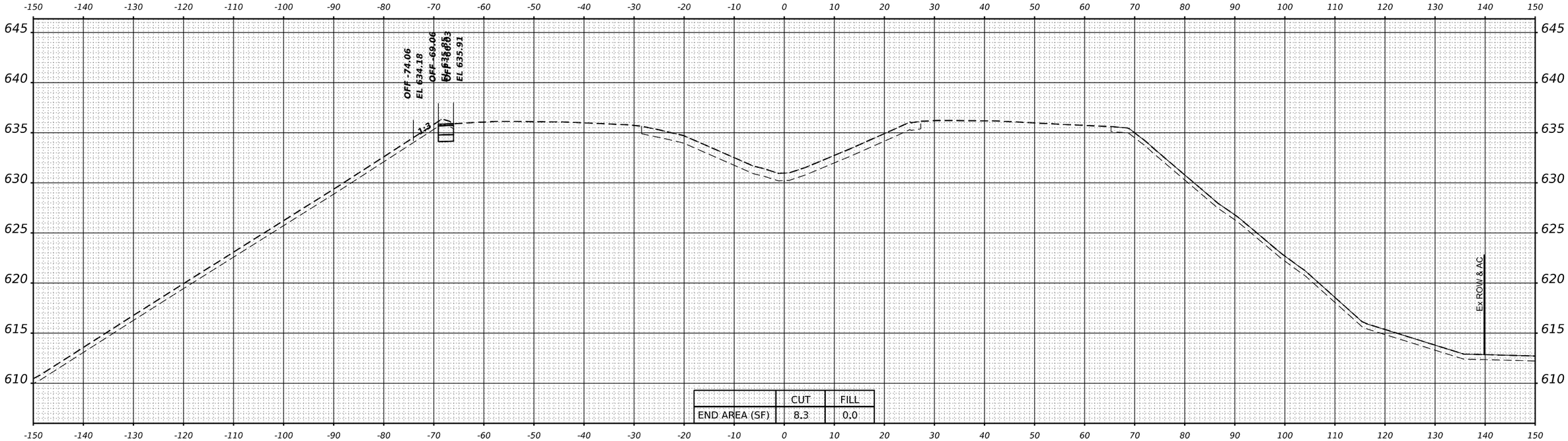

	CUT	FILL
END AREA (SF)	8.3	0.0

STA 531+00.00

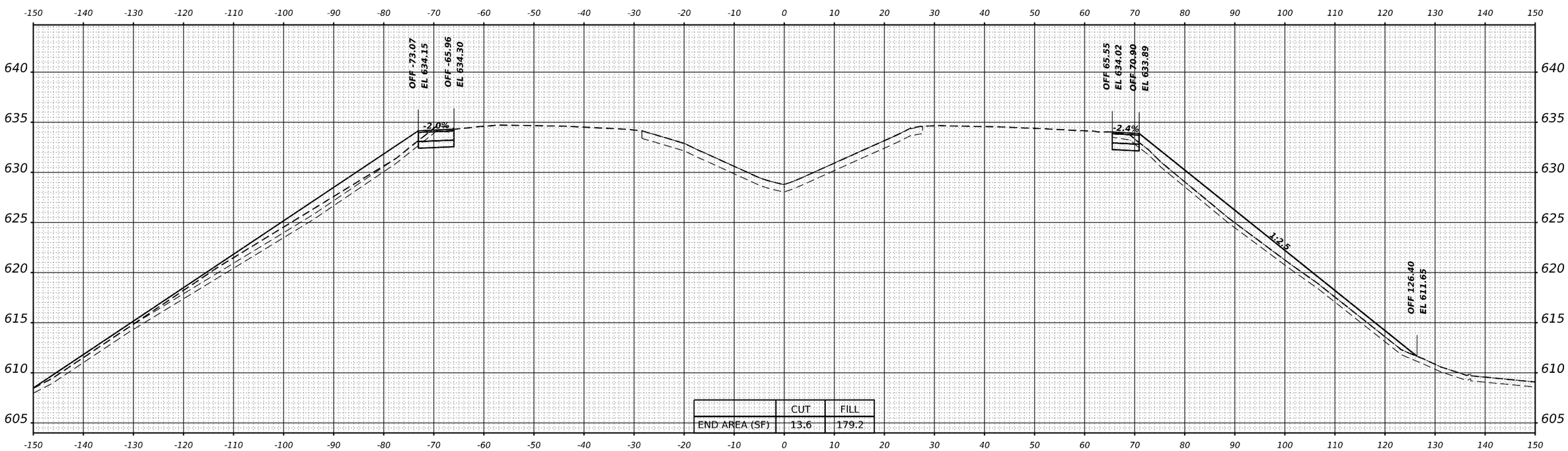

	CUT	FILL
END AREA (SF)	13.6	179.2

STA 530+00.00

FINAL SURVEY — NOTE BOOK NO. — SURVEYED — PLOTTED — TEMPLATE — AREAS — AREAS CHECKED — BY — DATE

ORIGINAL SURVEY — NOTE BOOK NO. — SURVEYED — PLOTTED — TEMPLATE — AREAS — AREAS CHECKED — BY — DATE

MODEL: BL_PR_I80_W - 530+00.00 [Sheet]
FILE NAME: pw://transystems-pw.bentley.com:transyscorp-pw1-hosted/Documents/Projects_2018/CH491/401180022/02-TranSystems/CAD/05-3D/02-Container/PRE-STAGE/01TSC-CONTAINER_PR_ROADWAY_PRE-STAGE-P4.dgn

TRANSYSTEMS

USER NAME = amkluver	DESIGNED - VLJ	REVISED -	
	DRAWN - MBM	REVISED -	
PLOT SCALE = 0.16666633 ' / in.	CHECKED - JMG	REVISED -	
PLOT DATE = 10/5/2023	DATE - 6/26/23	REVISED -	

STATE OF ILLINOIS
DEPARTMENT OF TRANSPORTATION

CROSS SECTIONS PRE-STAGE
I-80

SCALE: 10:H 5:V | SHEET 7 OF 62 SHEETS | STA. 530+00.00 — 531+00.00

F.A.I. RTE.	SECTION	COUNTY	TOTAL SHEETS	SHEET NO.
I-80	FAI 80 22 BR	WILL	1201	879

CONTRACT NO. 62R89

ILLINOIS | FED. AID PROJECT

FINAL SURVEY		BY	DATE
NOTE BOOK	SURVEYED		
	PLOTTED		
	TEMPLATE		
	AREAS		
NO.	AREAS CHECKED		

ORIGINAL SURVEY		BY	DATE
NOTE BOOK	SURVEYED		
	PLOTTED		
	TEMPLATE		
	AREAS		
NO.	AREAS CHECKED		

MODEL: BL_PR_I80_W - 532+00.00 [Sheet]
FILE NAME: pw://transystems-pw.bentley.com:transyscorp-pw1-hosted/Documents/Projects_2018/CH491/401180022/02-TranSystems/CAD/05-3D/02-Container//PRE-STAGE/D1TSC-CONTAINER_PR_ROADWAY_PRE-STAGE-P4.dgn

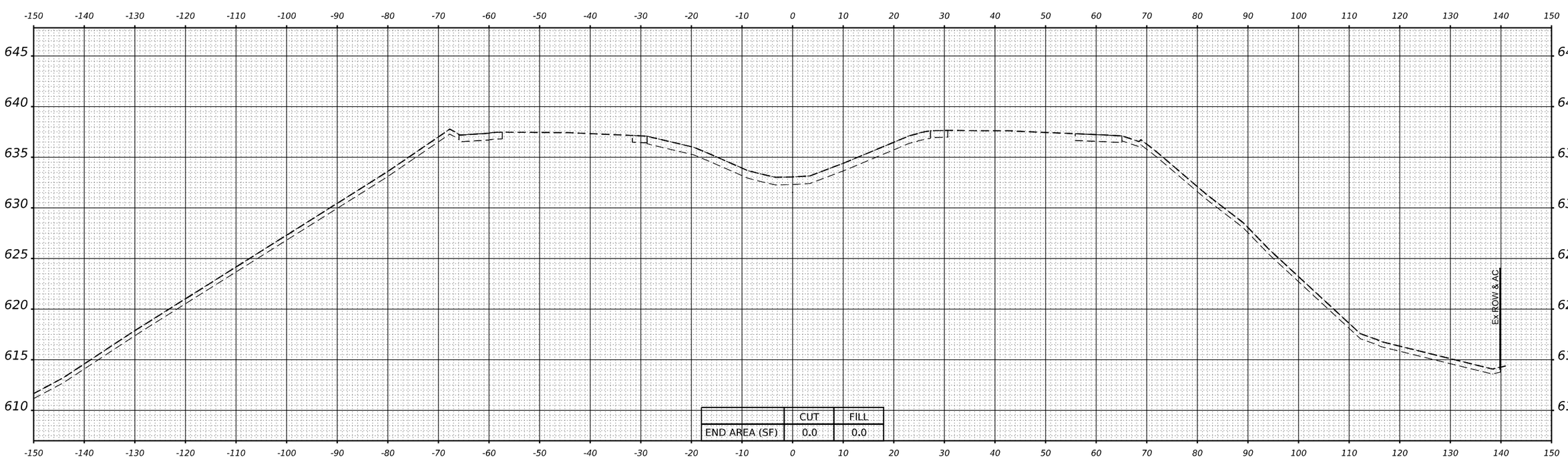

	CUT	FILL
END AREA (SF)	0.0	0.0

STA 532+00.00

TRANSYSTEMS

USER NAME = amkluver	DESIGNED - VLJ	REVISED -	
	DRAWN - MBM	REVISED -	
PLOT SCALE = 0.16666633 ' / in.	CHECKED - JMG	REVISED -	
PLOT DATE = 10/5/2023	DATE - 6/26/23	REVISED -	

STATE OF ILLINOIS
DEPARTMENT OF TRANSPORTATION

CROSS SECTIONS PRE-STAGE
I-80

SCALE: 10:H 5:V | SHEET 8 OF 62 SHEETS | STA. 532+00.00

F.A.I. RTE.	SECTION	COUNTY	TOTAL SHEETS	SHEET NO.
I-80	FAI 80 22 BR	WILL	1201	880

CONTRACT NO. 62R89

ILLINOIS | FED. AID PROJECT

FINAL SURVEY		BY	DATE
NOTE BOOK	SURVEYED		
	PLOTTED		
	TEMPLATE		
	AREAS		
NO.	AREAS CHECKED		

ORIGINAL SURVEY		BY	DATE
NOTE BOOK	SURVEYED		
	PLOTTED		
	TEMPLATE		
	AREAS		
NO.	AREAS CHECKED		

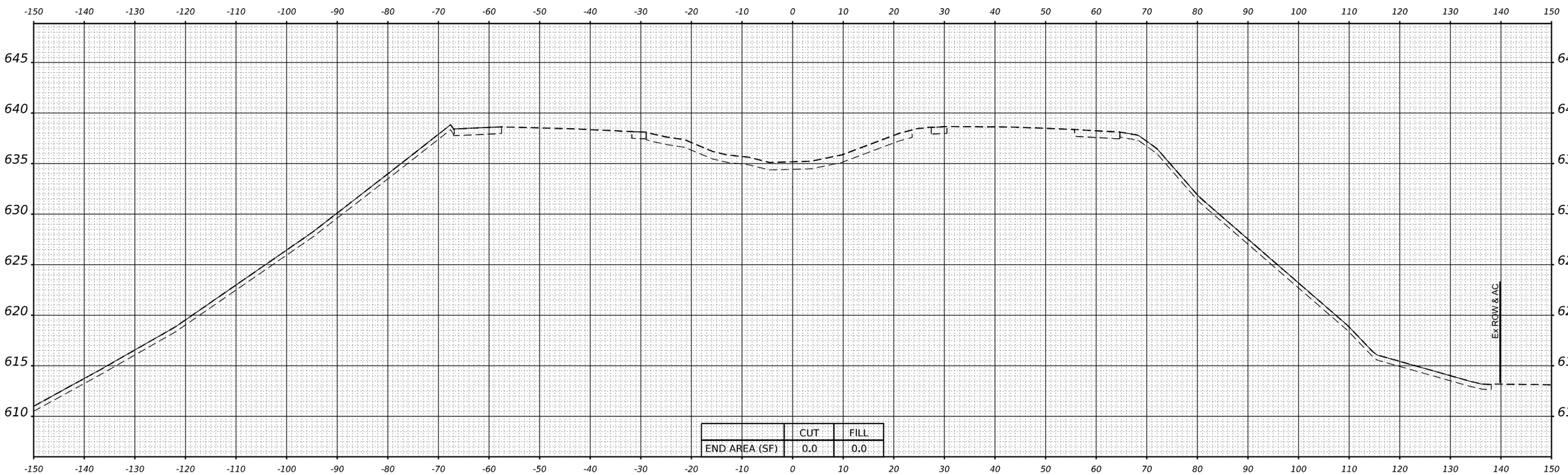

	CUT	FILL
END AREA (SF)	0.0	0.0

STA 533+00.00

MODEL: BL_PR_I80_W - 533+00.00 (Sheet)
FILE NAME: pw://transystems-pw.bentley.com:transyscorp-pw1-hosted/Documents/Projects_2018/CH491/401180022/02-TranSystems/CAD/05-3D/02-Container//PRE-STAGE/D11SC-CONTAINER_PR_ROADWAY_PRE-STAGE-P4.dgn

TRANSYSTEMS

USER NAME = amkluver	DESIGNED - VLJ	REVISED -	
	DRAWN - MBM	REVISED -	
PLOT SCALE = 0.16666633 ' / in.	CHECKED - JMG	REVISED -	
PLOT DATE = 10/5/2023	DATE - 6/26/23	REVISED -	

STATE OF ILLINOIS
DEPARTMENT OF TRANSPORTATION

CROSS SECTIONS PRE-STAGE
I-80

SCALE: 10:H 5:V | SHEET 9 OF 62 SHEETS | STA. 533+00.00

F.A.I. RTE.	SECTION	COUNTY	TOTAL SHEETS	SHEET NO.
I-80	FAI 80 22 BR	WILL	1201	881
		CONTRACT NO. 62R89		
	ILLINOIS	FED. AID PROJECT		

FINAL SURVEY		BY	DATE
NOTE BOOK NO.	SURVEYED		
	PLOTTED		
	TEMPLATE		
	AREAS		
	AREAS CHECKED		

ORIGINAL SURVEY		BY	DATE
NOTE BOOK NO.	SURVEYED		
	PLOTTED		
	TEMPLATE		
	AREAS		
	AREAS CHECKED		

MODEL: BL_PR_I80_W = 534+00.00 [Sheet]
FILE NAME: pw://transystemspw.bentley.com:transyscorp-pw1-hosted/Documents/Projects_2018/CH401/401180022/02-TranSystems/CAD/05-3D/02-Container/PRE-STAGE/01TSC-CONTAINER_PR_ROADWAY_PRE-STAGE-P4.dgn

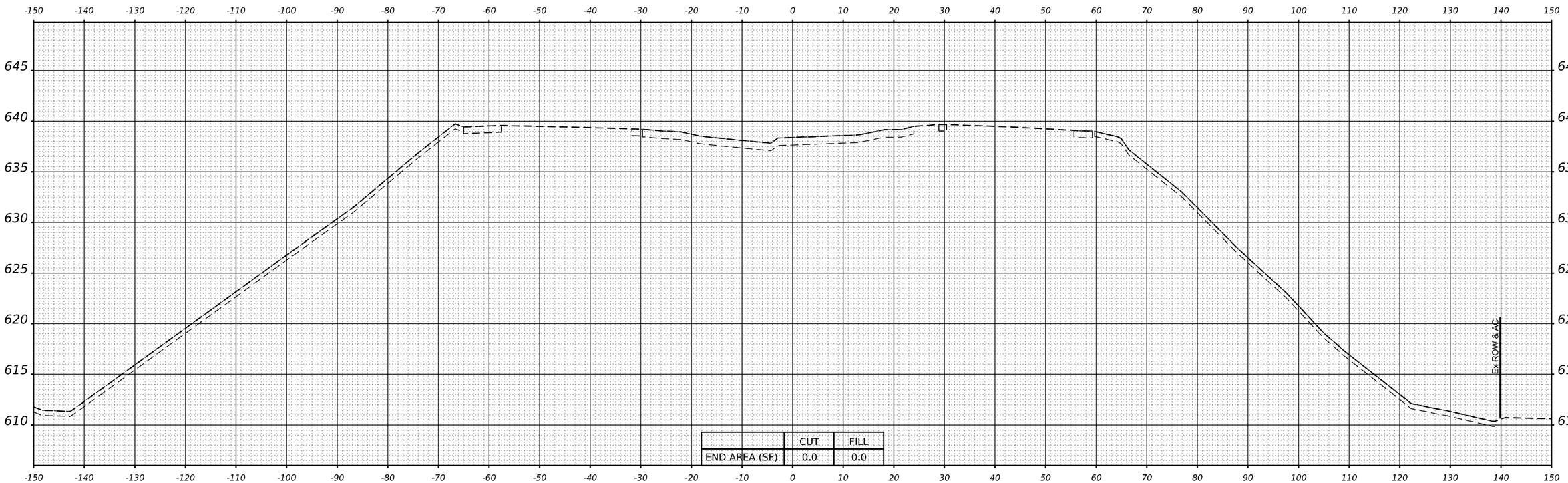

	CUT	FILL
END AREA (SF)	0.0	0.0

STA 534+00.00

TRANSYSTEMS

USER NAME = amkluver	DESIGNED - VLJ	REVISED -	
	DRAWN - MBM	REVISED -	
PLOT SCALE = 0.16666633 ' / in.	CHECKED - JMG	REVISED -	
PLOT DATE = 10/5/2023	DATE - 6/26/23	REVISED -	

STATE OF ILLINOIS
DEPARTMENT OF TRANSPORTATION

CROSS SECTIONS PRE-STAGE
I-80

SCALE: 10:H 5:V | SHEET 10 OF 62 SHEETS | STA. 534+00.00

F.A.I. RTE.	SECTION	COUNTY	TOTAL SHEETS	SHEET NO.
I-80	FAI 80 22 BR	WILL	1201	882
		CONTRACT NO. 62R89		
		ILLINOIS	FED. AID PROJECT	

FINAL SURVEY		BY	DATE
NOTE BOOK NO.	SURVEYED		
	PLOTTED		
	TEMPLATE		
	AREAS		
	AREAS CHECKED		

ORIGINAL SURVEY		BY	DATE
NOTE BOOK NO.	SURVEYED		
	PLOTTED		
	TEMPLATE		
	AREAS		
	AREAS CHECKED		

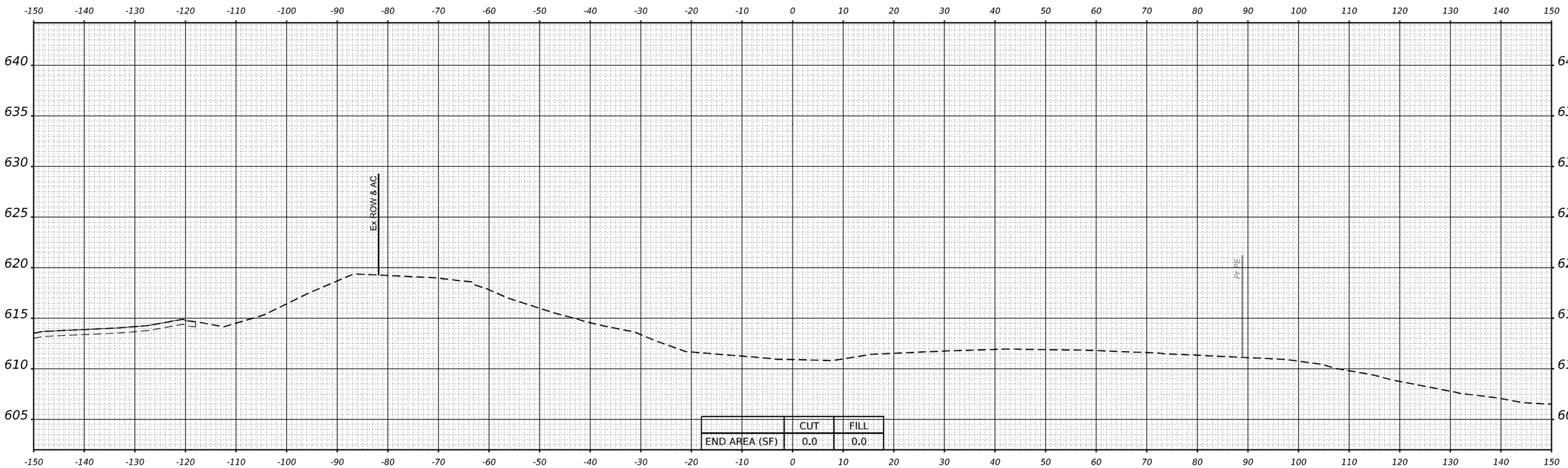

	CUT	FILL
END AREA (SF)	0.0	0.0

STA 535+00.00

MODEL: BL_PR_890_W - 535+00.00 [Sheet]
FILE NAME: pw://transystems-pw.bentley.com:transyscorp-pw34-hosted/Documents/Projects_2018/CH401/401180022/02-TranSystems/CAD/05-3D/02-Container/PRE-STAGE/D1TSC-CONTAINER_PR_ROADWAY_PRE-STAGE-P4.dgn

TRANSYSTEMS

USER NAME = amkluver	DESIGNED - VLJ	REVISED -	
	DRAWN - MBM	REVISED -	
PLOT SCALE = 0.16666633 ' / in.	CHECKED - JMG	REVISED -	
PLOT DATE = 10/5/2023	DATE - 6/26/23	REVISED -	

STATE OF ILLINOIS
DEPARTMENT OF TRANSPORTATION

CROSS SECTIONS PRE-STAGE
I-80

SCALE: 10:H 5:V | SHEET 11 OF 62 SHEETS | STA. 535+00.00

F.A.I. RTE.	SECTION	COUNTY	TOTAL SHEETS	SHEET NO.
I-80	FAI 80 22 BR	WILL	1201	883
		CONTRACT NO. 62R89		
	ILLINOIS	FED. AID PROJECT		

FINAL SURVEY		BY	DATE
NOTE BOOK NO.	SURVEYED PLOTTED TEMPLATE AREAS AREAS CHECKED		

ORIGINAL SURVEY		BY	DATE
NOTE BOOK NO.	SURVEYED PLOTTED TEMPLATE AREAS AREAS CHECKED		

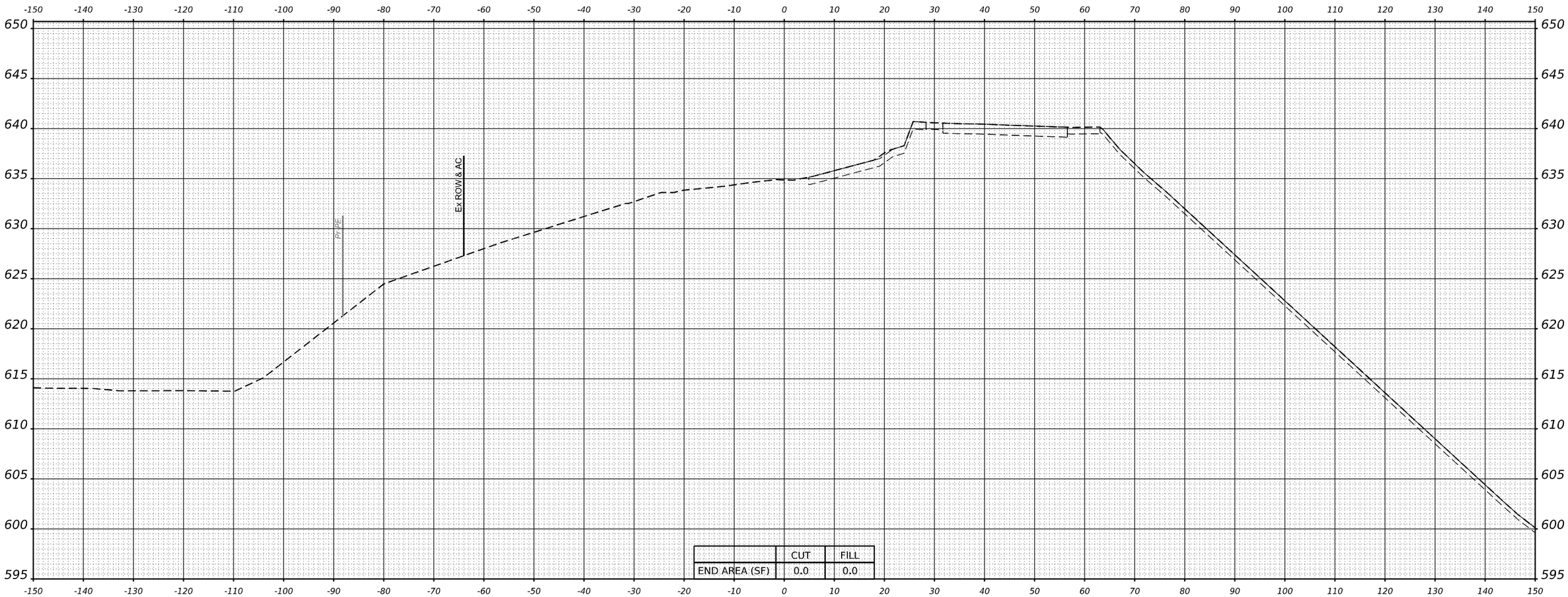

	CUT	FILL
END AREA (SF)	0.0	0.0

STA 536+00.00

MODEL: BL_PR_IR0_W - 536+00.00 (Sheet)
FILE NAME: pw://transystems-pw.bentley.com:transyscorp-pw1-hosted/Documents/Projects_2018/CH401/401180022/02-TranSystems/CAD/03-3D/02-Container/PRE-STAGE/D1TSC-CONTAINER_PR_ROADWAY_PRE-STAGE-P4.dgn

TRANSYSTEMS

USER NAME = amkluver	DESIGNED - VLJ	REVISED -	
	DRAWN - MBM	REVISED -	
PLOT SCALE = 0.16666633 ' / in.	CHECKED - JMG	REVISED -	
PLOT DATE = 10/5/2023	DATE - 6/26/23	REVISED -	

STATE OF ILLINOIS
DEPARTMENT OF TRANSPORTATION

CROSS SECTIONS PRE-STAGE
I-80

SCALE: 10:H 5:V | SHEET 12 OF 62 SHEETS | STA. 536+00.00

F.A.I. RTE.	SECTION	COUNTY	TOTAL SHEETS	SHEET NO.
I-80	FAI 80 22 BR	WILL	1201	884
		CONTRACT NO. 62R89		
		ILLINOIS	FED. AID PROJECT	

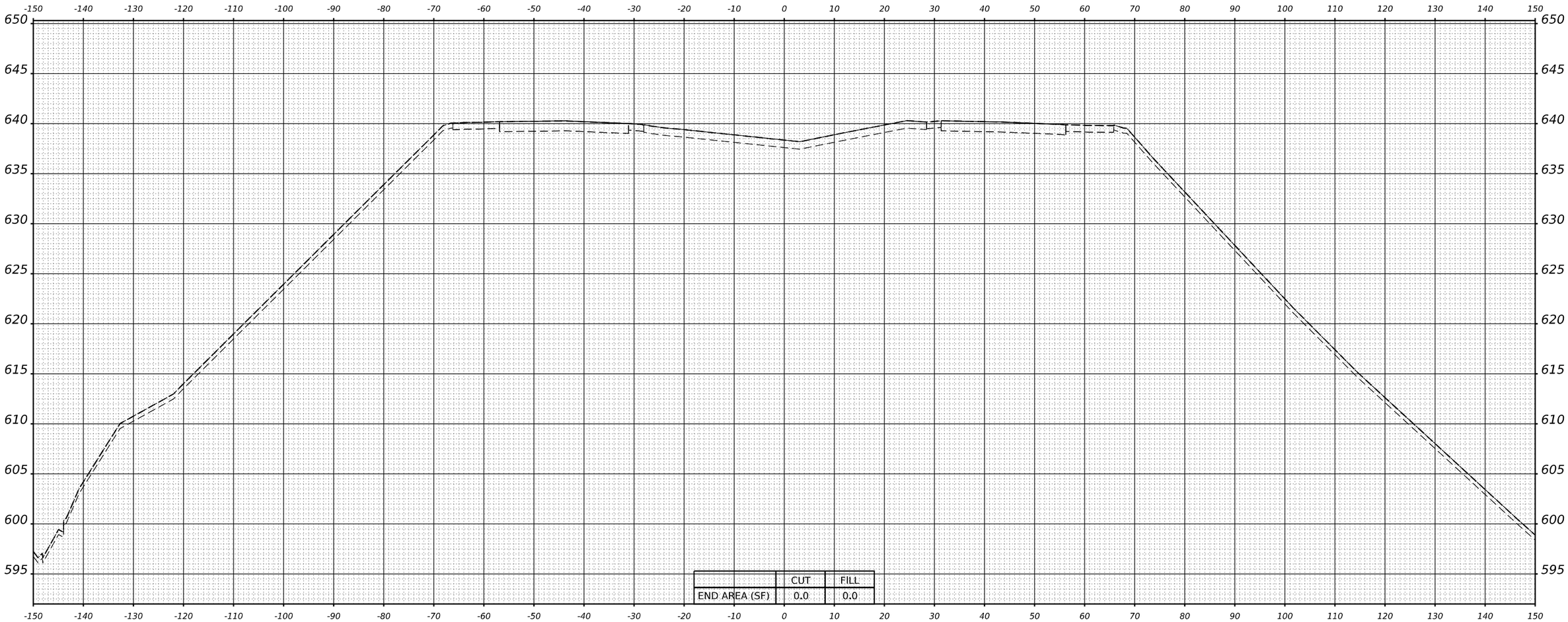

	CUT	FILL
END AREA (SF)	0.0	0.0

STA 537+00.00

FINAL SURVEY	BY	DATE
SURVEYED		
PLOTTED		
TEMPLATE		
AREAS		
AREAS CHECKED		
NOTE BOOK		
NO.		

ORIGINAL SURVEY	BY	DATE
SURVEYED		
PLOTTED		
TEMPLATE		
AREAS		
AREAS CHECKED		
NOTE BOOK		
NO.		

MODEL: BL_PR_I80_W - 537+00.00 [Sheet]
FILE NAME: pw://transystems-pw.bentley.com:transyscorp-pw1-hosted/Documents/Projects_2018/CH401/401180022/02-TranSystems/CAD/05-3D/02-Container/PRE-STAGE/D1TSC-CONTAINER_PR_ROADWAY_PRE-STAGE-P4.dgn

TRANSYSTEMS

USER NAME = amkluver	DESIGNED - VLJ	REVISED -	
	DRAWN - MBM	REVISED -	
PLOT SCALE = 0.16666633 ' / in.	CHECKED - JMG	REVISED -	
PLOT DATE = 10/5/2023	DATE - 6/26/23	REVISED -	

STATE OF ILLINOIS
DEPARTMENT OF TRANSPORTATION

CROSS SECTIONS PRE-STAGE
I-80

SCALE: 10:H 5:V | SHEET 13 OF 62 SHEETS | STA. 537+00.00

F.A.I. RTE.	SECTION	COUNTY	TOTAL SHEETS	SHEET NO.
I-80	FAI 80 22 BR	WILL	1201	885
		CONTRACT NO. 62R89		
		ILLINOIS	FED. AID PROJECT	

FINAL SURVEY		BY	DATE
NOTE BOOK	SURVEYED		
	PLOTTED		
	TEMPLATE		
	AREAS		
NO.	AREAS CHECKED		

ORIGINAL SURVEY		BY	DATE
NOTE BOOK	SURVEYED		
	PLOTTED		
	TEMPLATE		
	AREAS		
NO.	AREAS CHECKED		

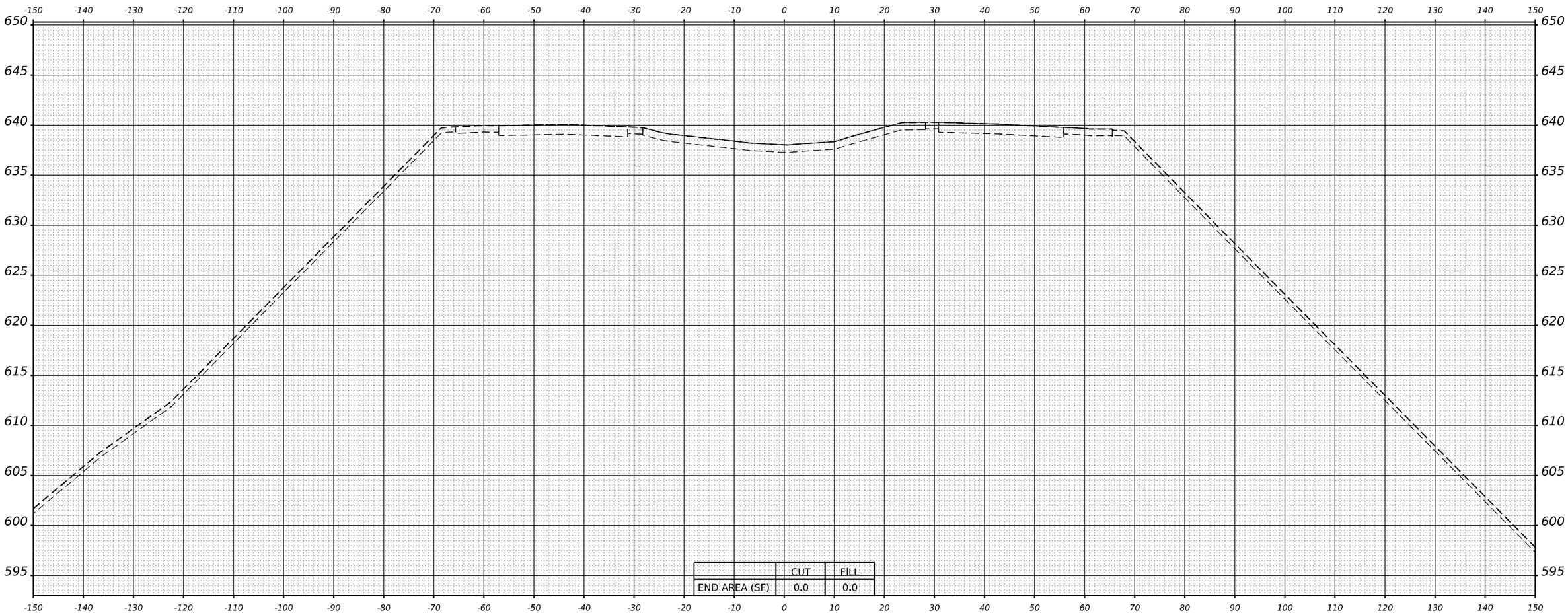

	CUT	FILL
END AREA (SF)	0.0	0.0

STA 538+00.00

MODEL: BL_PR_R0_W - 538+00.00 (Sheet)
FILE NAME: pw://transystems-pw.bentley.com:transyscorp-pw1-hosted/Documents/Projects_2018/CH401/401180022/02-TrainSystems/CAD/03-3D/02-Container/PRE-STAGE/D1TSC-CONTAINER_PR_ROADWAY_PRE-STAGE-P4.dgn

TRANSYSTEMS

USER NAME = amkluver	DESIGNED - VLJ	REVISED -	
	DRAWN - MBM	REVISED -	
PLOT SCALE = 0.16666633 ' / in.	CHECKED - JMG	REVISED -	
PLOT DATE = 10/5/2023	DATE - 6/26/23	REVISED -	

STATE OF ILLINOIS
DEPARTMENT OF TRANSPORTATION

CROSS SECTIONS PRE-STAGE
I-80

SCALE: 10:H 5:V | SHEET 14 OF 62 SHEETS | STA. 538+00.00

F.A.I. RTE.	SECTION	COUNTY	TOTAL SHEETS	SHEET NO.
I-80	FAI 80 22 BR	WILL	1201	886
		CONTRACT NO. 62R89		
	ILLINOIS	FED. AID PROJECT		

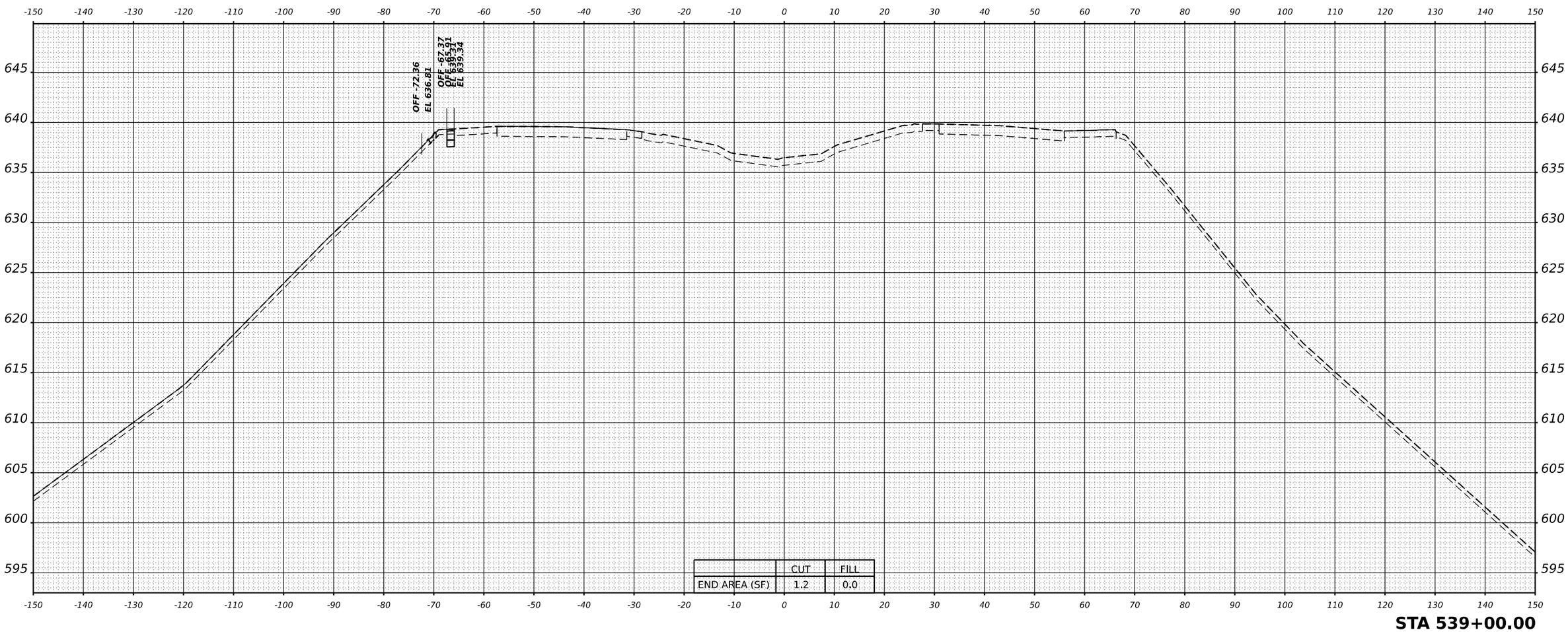

	CUT	FILL
END AREA (SF)	1.2	0.0

STA 539+00.00

FINAL SURVEY	BY	DATE
SURVEYED		
PLOTTED		
TEMPLATE		
AREAS		
AREAS CHECKED		
NOTE BOOK		
NO.		

ORIGINAL SURVEY	BY	DATE
SURVEYED		
PLOTTED		
TEMPLATE		
AREAS		
AREAS CHECKED		
NOTE BOOK		
NO.		

MODEL: BL_PR_I80_W - 539+00.00 [Sheet]
FILE NAME: pw://transystems-pw.bentley.com:transyscorp-pw1-hosted/Documents/Projects_2018/CH401/401180022/02-TranSystems/CAD/05-3D/02-Container/PRE-STAGE/D1TSC-CONTAINER_PR_ROADWAY_PRE-STAGE-P4.dgn

TRANSYSTEMS

USER NAME = amkluver	DESIGNED - VLJ	REVISED -	
	DRAWN - MBM	REVISED -	
PLOT SCALE = 0.16666633 ' / in.	CHECKED - JMG	REVISED -	
PLOT DATE = 10/5/2023	DATE - 6/26/23	REVISED -	

STATE OF ILLINOIS
DEPARTMENT OF TRANSPORTATION

CROSS SECTIONS PRE-STAGE
I-80

SCALE: 10:H 5:V | SHEET 15 OF 62 SHEETS | STA. 539+00.00

F.A.I. RTE.	SECTION	COUNTY	TOTAL SHEETS	SHEET NO.
I-80	FAI 80 22 BR	WILL	1201	887

CONTRACT NO. 62R89

ILLINOIS | FED. AID PROJECT

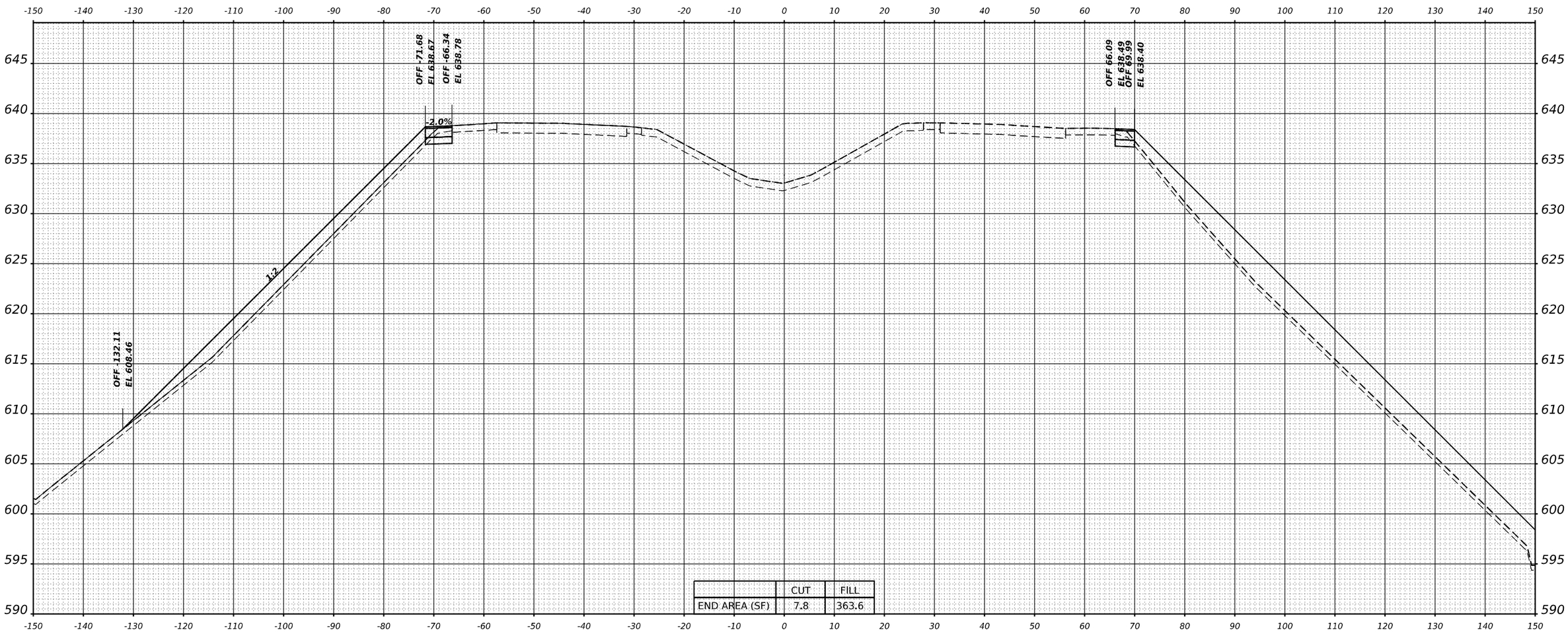

	CUT	FILL
END AREA (SF)	7.8	363.6

STA 540+00.00

FINAL SURVEY	BY	DATE
NOTE BOOK		
NO.		

SURVEYED
PLOTTED
TEMPLATE
AREAS
AREAS CHECKED

ORIGINAL SURVEY	BY	DATE
NOTE BOOK		
NO.		

SURVEYED
PLOTTED
TEMPLATE
AREAS
AREAS CHECKED

MODEL: BL_PR_I80_W - 540+00.00 (Sheet)
FILE NAME: pw://Transystems-pw.bentley.com:transyscorp-pw1-hosted/Documents/Projects_2018/CH401/401180022/02-TranSystems/CAD/03-3D/02-Container/PRE-STAGE/D1TSC-CONTAINER_PR_ROADWAY_PRE-STAGE-P4.dgn

TRANSYSTEMS

USER NAME = amkluver	DESIGNED - VLJ	REVISED -	
	DRAWN - MBM	REVISED -	
PLOT SCALE = 0.16666633 ' / in.	CHECKED - JMG	REVISED -	
PLOT DATE = 10/5/2023	DATE - 6/26/23	REVISED -	

STATE OF ILLINOIS
DEPARTMENT OF TRANSPORTATION

CROSS SECTIONS PRE-STAGE
I-80

SCALE: 10:H 5:V | SHEET 16 OF 62 SHEETS | STA. 540+00.00

F.A.I. RTE.	SECTION	COUNTY	TOTAL SHEETS	SHEET NO.
I-80	FAI 80 22 BR	WILL	1201	888
		CONTRACT NO. 62R89		
		ILLINOIS	FED. AID PROJECT	

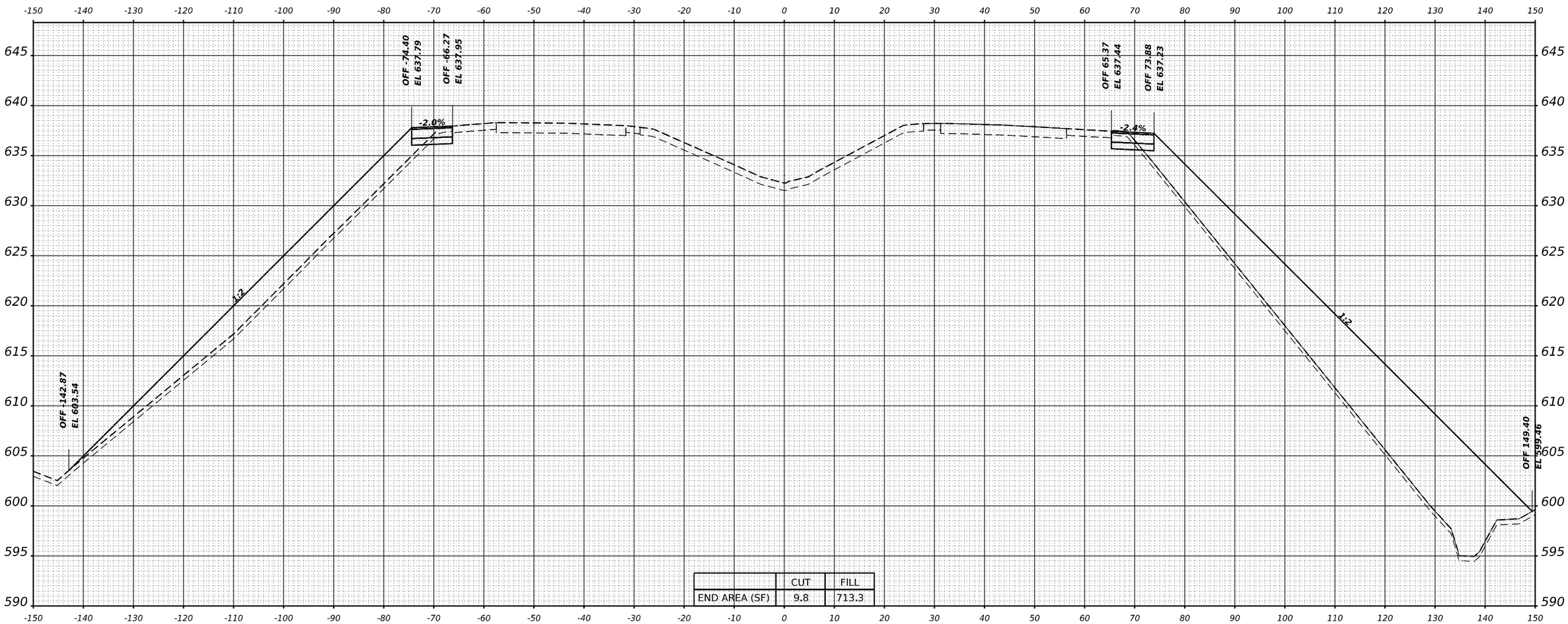

	CUT	FILL
END AREA (SF)	9.8	713.3

STA 541+00.00

FINAL SURVEY		BY	DATE
NOTE BOOK	SURVEYED		
	PLOTTED		
	TEMPLATE		
	AREAS		
NO.	AREAS CHECKED		

ORIGINAL SURVEY		BY	DATE
NOTE BOOK	SURVEYED		
	PLOTTED		
	TEMPLATE		
	AREAS		
NO.	AREAS CHECKED		

MODEL: BL_PR_I80_W - 541+00.00 [Sheet]
FILE NAME: pw://transystems-pw.bentley.com:transyscorp-pw1-hosted/Documents/Projects_2018/CH401/401180022/02-TranSystems/CAD/05-3D/02-Container/PRE-STAGE/DITSC-CONTAINER_PR_ROADWAY_PRE-STAGE-P4.dgn

TRANSYSTEMS

USER NAME = amkluver	DESIGNED - VLJ	REVISED -	
	DRAWN - MBM	REVISED -	
PLOT SCALE = 0.16666633 ' / in.	CHECKED - JMG	REVISED -	
PLOT DATE = 10/5/2023	DATE - 6/26/23	REVISED -	

STATE OF ILLINOIS
DEPARTMENT OF TRANSPORTATION

CROSS SECTIONS PRE-STAGE
I-80

SCALE: 10:H 5:V | SHEET 17 OF 62 SHEETS | STA. 541+00.00

F.A.I. RTE.	SECTION	COUNTY	TOTAL SHEETS	SHEET NO.
I-80	FAI 80 22 BR	WILL	1201	889
		CONTRACT NO. 62R89		
	ILLINOIS	FED. AID PROJECT		

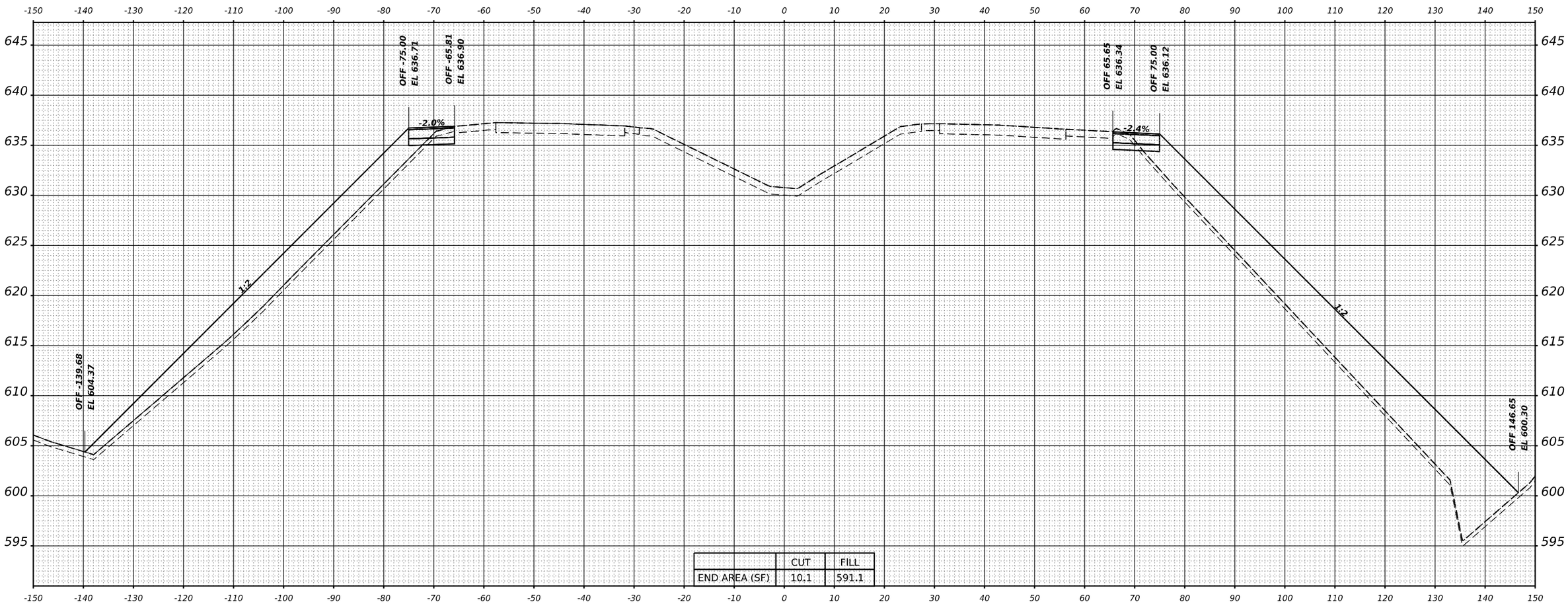

	CUT	FILL
END AREA (SF)	10.1	591.1

STA 542+00.00

FINAL SURVEY	BY	DATE
SURVEYED		
PLOTTED		
TEMPLATE		
AREAS		
AREAS CHECKED		
NOTE BOOK NO.		

ORIGINAL SURVEY	BY	DATE
SURVEYED		
PLOTTED		
TEMPLATE		
AREAS		
AREAS CHECKED		
NOTE BOOK NO.		

MODEL: BL_PR_I80_W - 542+00.00 [Sheet]
FILE NAME: pw://Transystems-pw.bentley.com:transyscorp-pw1-hosted/Documents/Projects_2018/CH401/401180022/02-TranSystems/CAD/03-3D/02-Container/PRE-STAGE/D1TSC-CONTAINER_PR_ROADWAY_PRE-STAGE-P4.dgn

TRANSYSTEMS

USER NAME = amkluver	DESIGNED - VLJ	REVISED -	
	DRAWN - MBM	REVISED -	
PLOT SCALE = 0.16666633 ' / in.	CHECKED - JMG	REVISED -	
PLOT DATE = 10/5/2023	DATE - 6/26/23	REVISED -	

STATE OF ILLINOIS
DEPARTMENT OF TRANSPORTATION

CROSS SECTIONS PRE-STAGE
I-80

SCALE: 10:H 5:V | SHEET 18 OF 62 SHEETS | STA. 542+00.00

F.A.I. RTE.	SECTION	COUNTY	TOTAL SHEETS	SHEET NO.
I-80	FAI 80 22 BR	WILL	1201	890
		CONTRACT NO. 62R89		
		ILLINOIS	FED. AID PROJECT	

FINAL SURVEY		BY	DATE
NOTE BOOK	SURVEYED		
	PLOTTED		
	TEMPLATE		
	AREAS		
NO.	AREAS CHECKED		

ORIGINAL SURVEY		BY	DATE
NOTE BOOK	SURVEYED		
	PLOTTED		
	TEMPLATE		
	AREAS		
NO.	AREAS CHECKED		

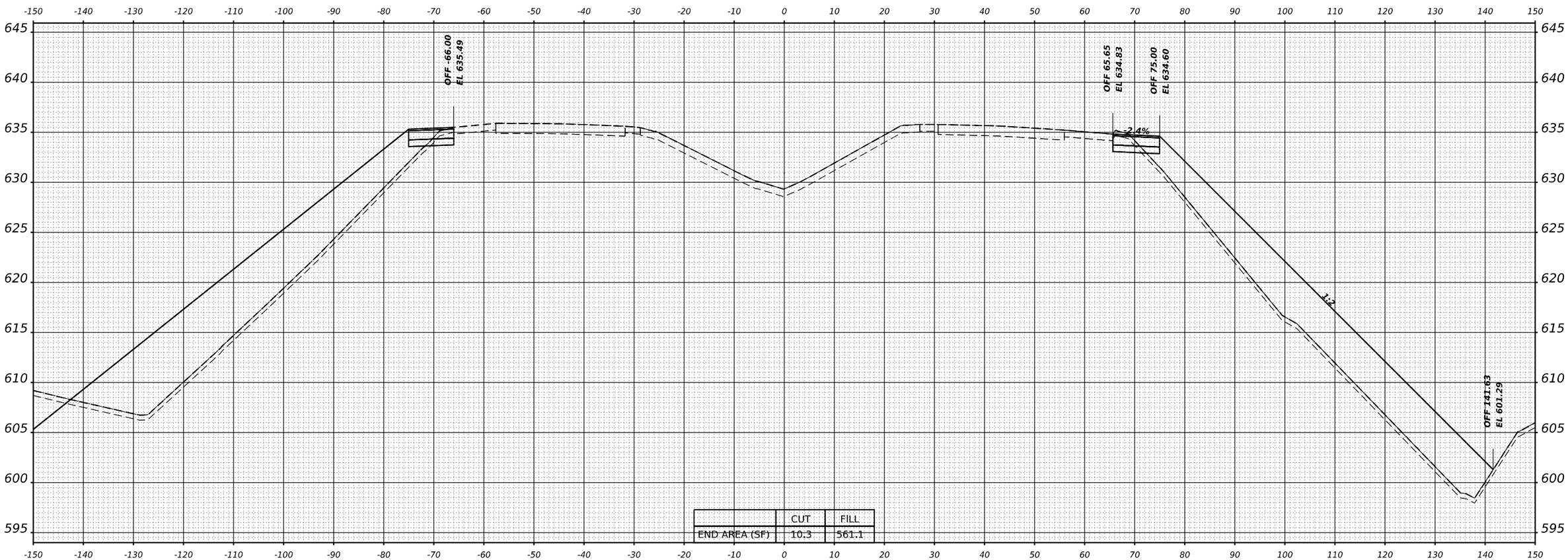

	CUT	FILL
END AREA (SF)	10.3	561.1

STA 543+00.00

MODEL: BL_PR_I80_W - 543+00.00 [Sheet]
FILE NAME: pw://transystems-pw.bentley.com:transyscorp-pw1-hosted/Documents/Projects_2018/CH401/401180022/02-TranSystems/CAD/05-3D/02-Container/PRE-STAGE/D1TSC-CONTAINER_PR_ROADWAY_PRE-STAGE-P4.dgn

TRANSYSTEMS

USER NAME = amkluver	DESIGNED - VLJ	REVISED -	
	DRAWN - MBM	REVISED -	
PLOT SCALE = 0.16666633 ' / in.	CHECKED - JMG	REVISED -	
PLOT DATE = 10/5/2023	DATE - 6/26/23	REVISED -	

STATE OF ILLINOIS
DEPARTMENT OF TRANSPORTATION

CROSS SECTIONS PRE-STAGE
I-80

SCALE: 10:H 5:V | SHEET 19 OF 62 SHEETS | STA. 543+00.00

F.A.I. RTE.	SECTION	COUNTY	TOTAL SHEETS	SHEET NO.
I-80	FAI 80 22 BR	WILL	1201	891
		CONTRACT NO. 62R89		
	ILLINOIS	FED. AID PROJECT		

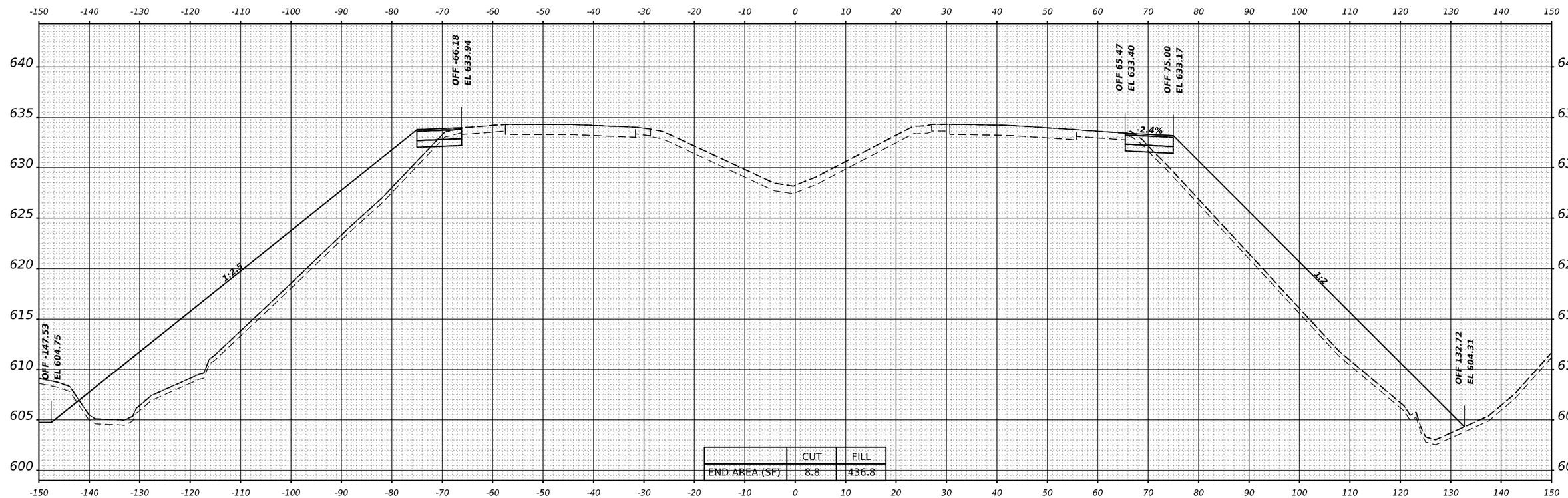

	CUT	FILL
END AREA (SF)	8.8	436.8

STA 544+00.00

FINAL SURVEY	BY	DATE
SURVEYED		
PLOTTED		
TEMPLATE		
AREAS		
AREAS CHECKED		
NOTE BOOK		
NO.		

ORIGINAL SURVEY	BY	DATE
SURVEYED		
PLOTTED		
TEMPLATE		
AREAS		
AREAS CHECKED		
NOTE BOOK		
NO.		

MODEL: BL_PR_I80_W - 544+00.00 [Sheet]
FILE NAME: pw://transystems-pw.bentley.com:transyscorp-pw1-hosted/Documents/Projects_2018/CH401/401180022/02-TranSystems/CAD/05-3D/02-Container/PRE-STAGE/D1TSC-CONTAINER_PR_ROADWAY_PRE-STAGE-P4.dgn

TRANSYSTEMS

USER NAME = amkluver	DESIGNED - VLJ	REVISED -	
	DRAWN - MBM	REVISED -	
PLOT SCALE = 0.16666633 ' / in.	CHECKED - JMG	REVISED -	
PLOT DATE = 10/5/2023	DATE - 6/26/23	REVISED -	

STATE OF ILLINOIS
DEPARTMENT OF TRANSPORTATION

CROSS SECTIONS PRE-STAGE
I-80

SCALE: 10:H 5:V | SHEET 20 OF 62 SHEETS | STA. 544+00.00

F.A.I. RTE.	SECTION	COUNTY	TOTAL SHEETS	SHEET NO.
I-80	FAI 80 22 BR	WILL	1201	892

CONTRACT NO. 62R89

ILLINOIS | FED. AID PROJECT

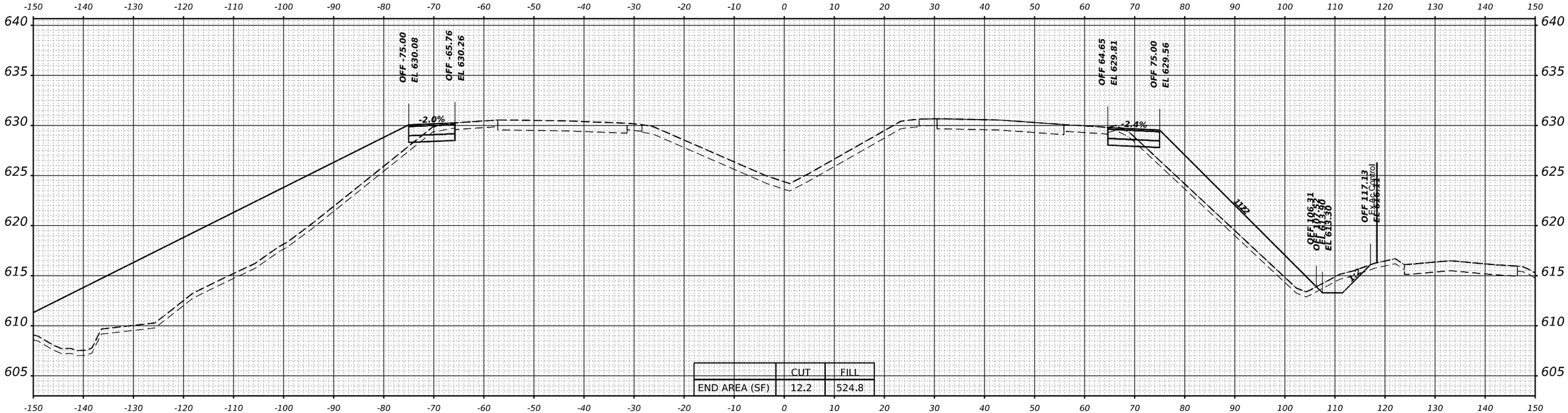

	CUT	FILL
END AREA (SF)	12.2	524.8

STA 546+00.00

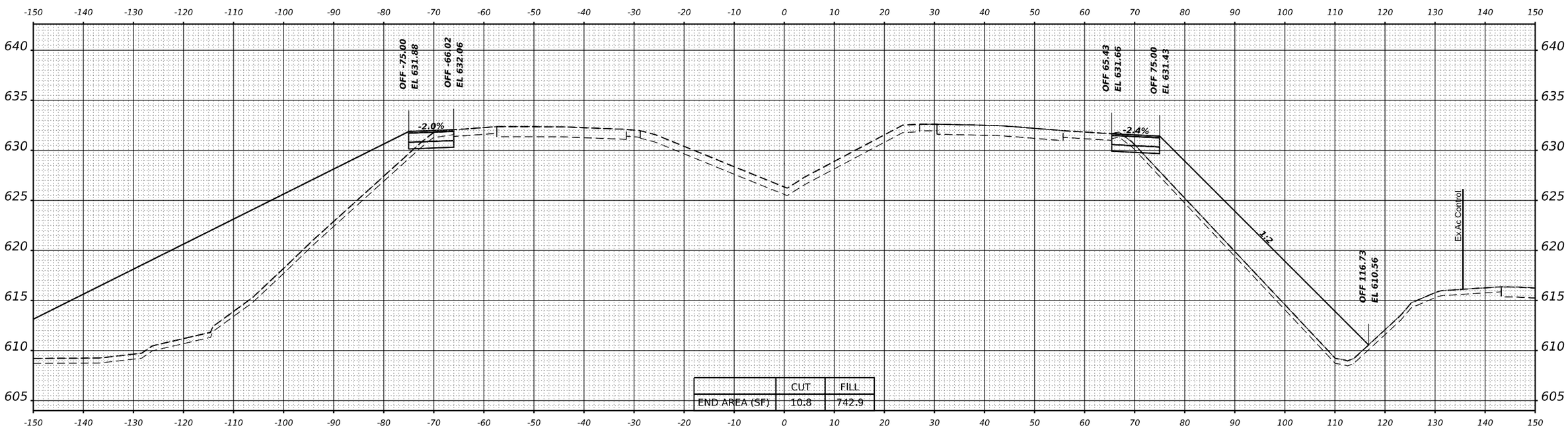

	CUT	FILL
END AREA (SF)	10.8	742.9

STA 545+00.00

FINAL SURVEY	BY	DATE
SURVEYED		
PLOTTED		
TEMPLATE		
AREAS		
AREAS CHECKED		
NOTE BOOK		
NO.		

ORIGINAL SURVEY	BY	DATE
SURVEYED		
PLOTTED		
TEMPLATE		
AREAS		
AREAS CHECKED		
NOTE BOOK		
NO.		

MODEL: BL_PR_I80_W - 545+00.00 [Sheet]
FILE NAME: pw://transystems-pw.bentley.com:transyscorp-pw1-hosted/Documents/Projects_2018/CH491/401180022/02-TranSystems/CAD/05-3D/02-Container/PRE-STAGE/D1TSC-CONTAINER_PR_ROADWAY_PRE-STAGE-P4.dgn

TRANSYSTEMS

USER NAME = amkluver	DESIGNED - VLJ	REVISED -
	DRAWN - MBM	REVISED -
PLOT SCALE = 0.16666633 ' / in.	CHECKED - JMG	REVISED -
PLOT DATE = 10/5/2023	DATE - 6/26/23	REVISED -

STATE OF ILLINOIS
DEPARTMENT OF TRANSPORTATION

CROSS SECTIONS PRE-STAGE
I-80

SCALE: 10:H 5:V | SHEET 21 OF 62 SHEETS | STA. 545+00.00 546+00.00

F.A.I. RTE.	SECTION	COUNTY	TOTAL SHEETS	SHEET NO.
I-80	FAI 80 22 BR	WILL	1201	893

CONTRACT NO. 62R89

ILLINOIS | FED. AID PROJECT

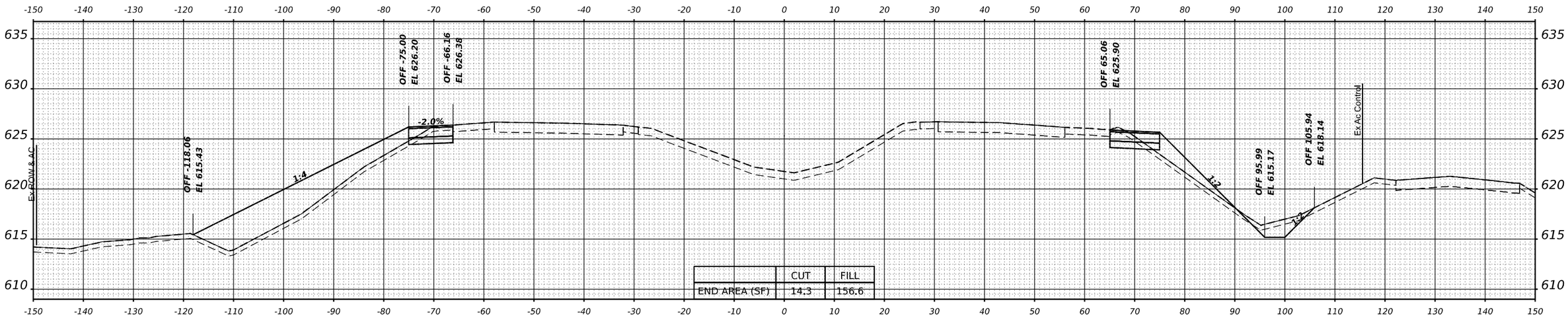

	CUT	FILL
END AREA (SF)	14.3	156.6

STA 548+00.00

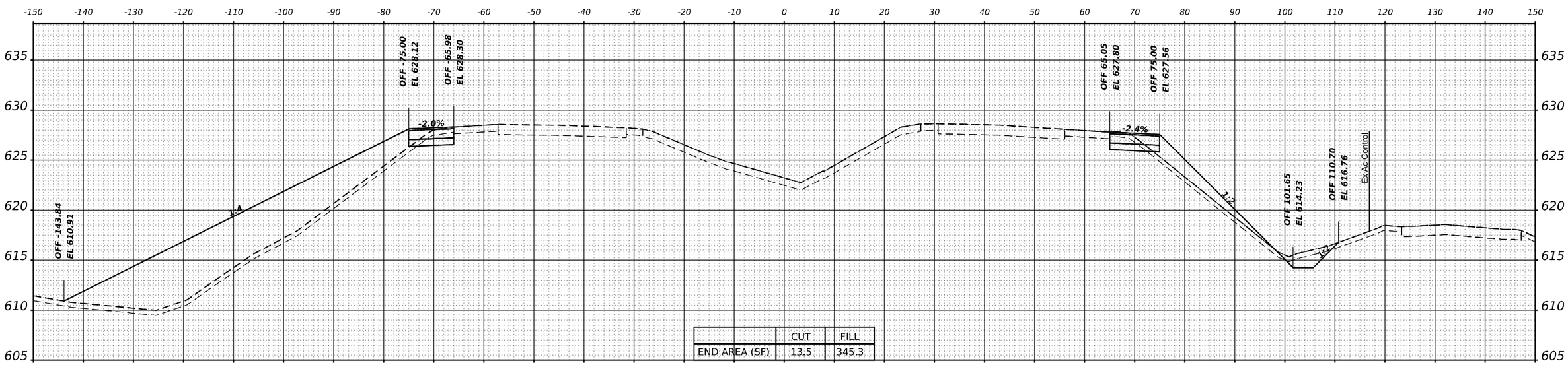

	CUT	FILL
END AREA (SF)	13.5	345.3

STA 547+00.00

FINAL SURVEY	BY	DATE
SURVEYED		
PLOTTED		
TEMPLATE		
AREAS		
AREAS CHECKED		
NOTE BOOK		
NO.		

ORIGINAL SURVEY	BY	DATE
SURVEYED		
PLOTTED		
TEMPLATE		
AREAS		
AREAS CHECKED		
NOTE BOOK		
NO.		

MODEL: BL_PR_I80_W - 547+00.00 [Sheet]
FILE NAME: pw://transystems-pw.bentley.com:transyscorp-eiw14-hosted/Documents/Projects_2018/CH401/401180022/02-TranSystems/CAD/05-3D/02-Container/PRE-STAGE/D1TSC-CONTAINER_PR_ROADWAY_PRE-STAGE-P4.dgn

TRANSYSTEMS

USER NAME = amkluver	DESIGNED - VLJ	REVISED -	
	DRAWN - MBM	REVISED -	
PLOT SCALE = 0.16666633 ' / in.	CHECKED - JMG	REVISED -	
PLOT DATE = 10/5/2023	DATE - 6/26/23	REVISED -	

STATE OF ILLINOIS
DEPARTMENT OF TRANSPORTATION

CROSS SECTIONS PRE–STAGE
I–80

SCALE: 10:H 5:V | SHEET 22 OF 62 SHEETS | STA. 547+00.00 548+00.00

F.A.I. RTE.	SECTION	COUNTY	TOTAL SHEETS	SHEET NO.
I-80	FAI 80 22 BR	WILL	1201	894

CONTRACT NO. 62R89

ILLINOIS | FED. AID PROJECT

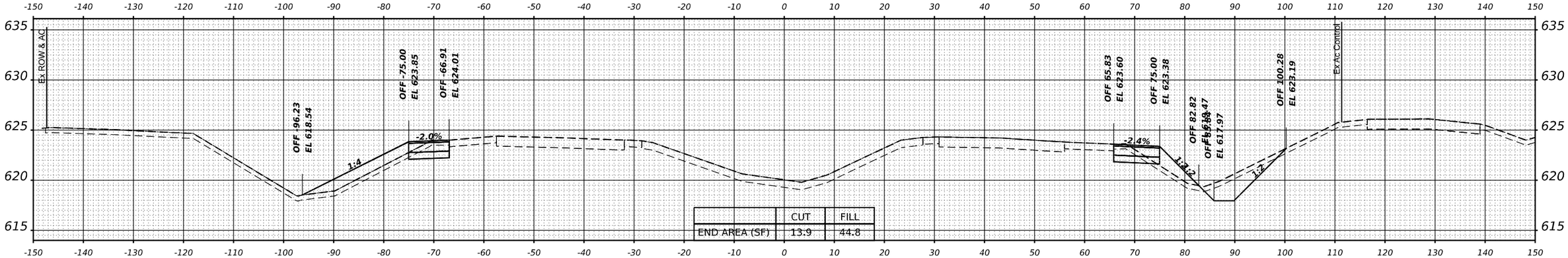

	CUT	FILL
END AREA (SF)	13.9	44.8

STA 551+00.00

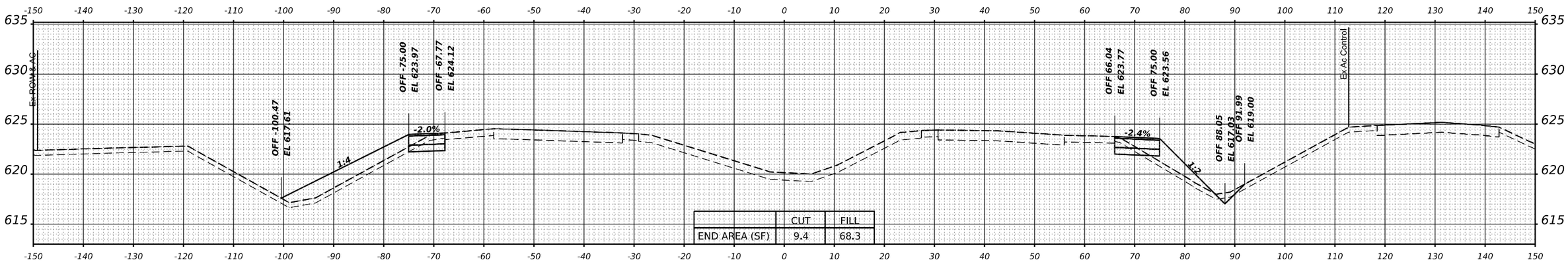

	CUT	FILL
END AREA (SF)	9.4	68.3

STA 550+00.00

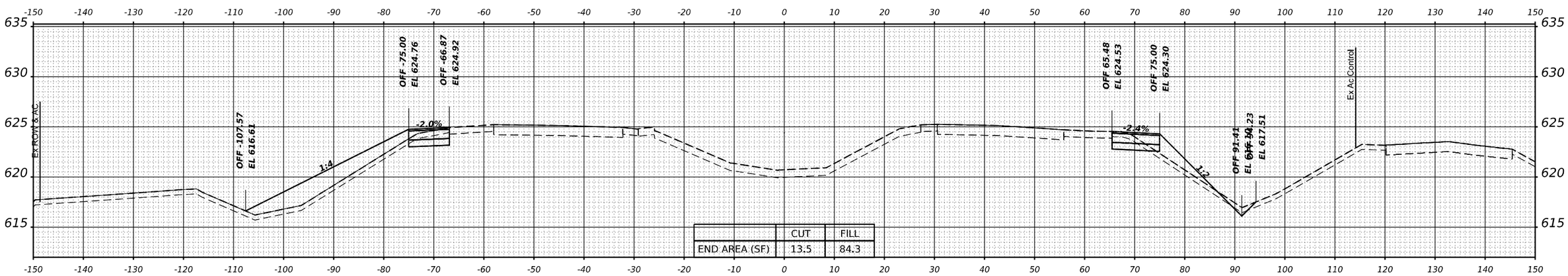

	CUT	FILL
END AREA (SF)	13.5	84.3

STA 549+00.00

FINAL SURVEY	BY	DATE
NOTE BOOK		
NO.		

SURVEYED
PLOTTED
TEMPLATE
AREAS
AREAS CHECKED

ORIGINAL SURVEY	BY	DATE
NOTE BOOK		
NO.		

SURVEYED
PLOTTED
TEMPLATE
AREAS
AREAS CHECKED

MODEL: BL_PR_I80_W - 549+00.00 [Sheet]
FILE NAME: pw://transystems-pw.bentley.com:transyscorp-pw1-hosted/Documents/Projects_2018/CH401/401180022/02-TranSystems/CAD/05-3D/02-Container/PRE-STAGE/D1TSC-CONTAINER_PR_ROADWAY_PRE-STAGE-P4.dgn

TRANSYSTEMS

USER NAME = amkluver	DESIGNED - VLJ	REVISED -	
	DRAWN - MBM	REVISED -	
PLOT SCALE = 0.16666633 ' / in.	CHECKED - JMG	REVISED -	
PLOT DATE = 10/5/2023	DATE - 6/26/23	REVISED -	

STATE OF ILLINOIS
DEPARTMENT OF TRANSPORTATION

CROSS SECTIONS PRE-STAGE
I-80

SCALE: 10:H 5:V | SHEET 23 OF 62 SHEETS | STA. 549+00.00 551+00.00

F.A.I. RTE.	SECTION	COUNTY	TOTAL SHEETS	SHEET NO.
I-80	FAI 80 22 BR	WILL	1201	895

CONTRACT NO. 62R89

ILLINOIS | FED. AID PROJECT

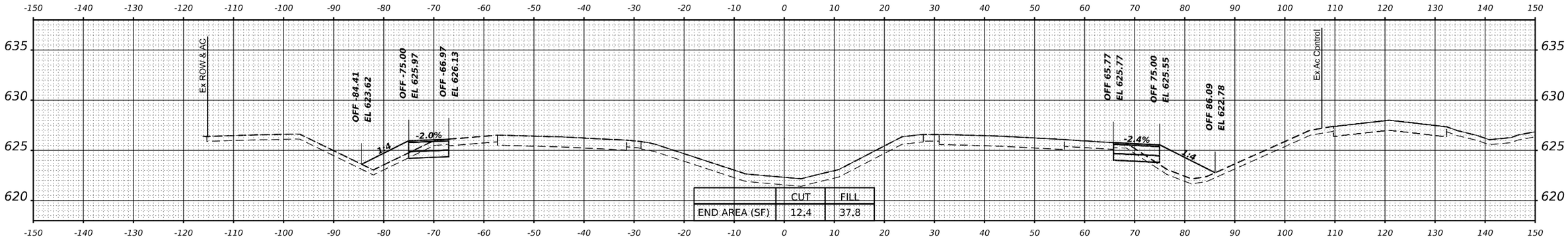

	CUT	FILL
END AREA (SF)	12.4	37.8

STA 554+00.00

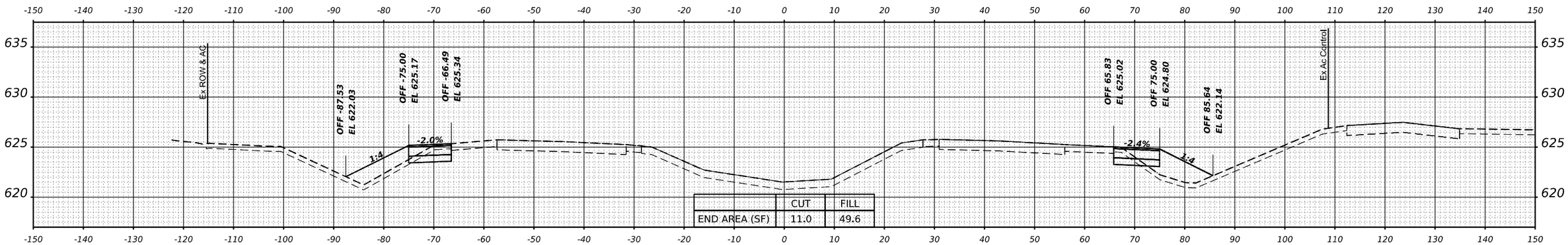

	CUT	FILL
END AREA (SF)	11.0	49.6

STA 553+00.00

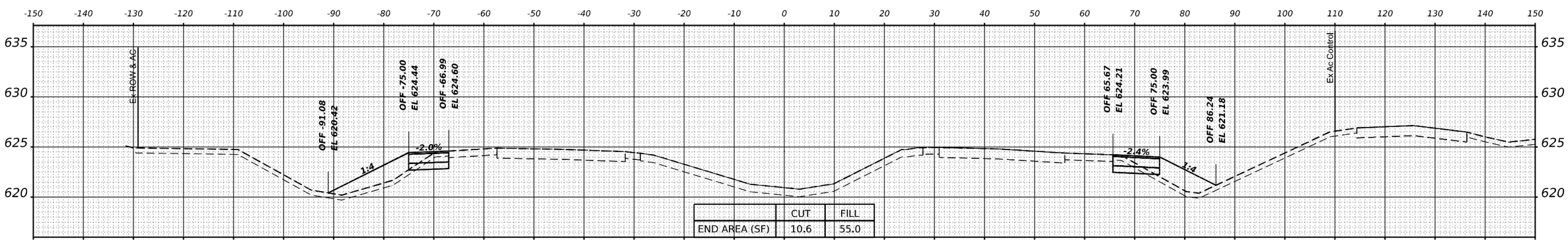

	CUT	FILL
END AREA (SF)	10.6	55.0

STA 552+00.00

FINAL SURVEY	BY	DATE
SURVEYED		
PLOTTED		
TEMPLATE		
AREAS		
AREAS CHECKED		
NOTE BOOK		
NO.		

ORIGINAL SURVEY	BY	DATE
SURVEYED		
PLOTTED		
TEMPLATE		
AREAS		
AREAS CHECKED		
NOTE BOOK		
NO.		

MODEL: BL_PR_I80_W - 552+00.00 [Sheet]
FILE NAME: pw://transystems-pw.bentley.com:transyscorp-pw1-hosted/Documents/Projects_2018/CH401/401180022/02-TranSystems/CAD/05-3D/02-Container/PRE-STAGE/D1TSC-CONTAINER_PR_ROADWAY_PRE-STAGE-P4.dgn

TRANSYSTEMS

USER NAME = amkluver	DESIGNED - VLJ	REVISED -	
	DRAWN - MBM	REVISED -	
PLOT SCALE = 0.16666633 ' / in.	CHECKED - JMG	REVISED -	
PLOT DATE = 10/5/2023	DATE - 6/26/23	REVISED -	

STATE OF ILLINOIS
DEPARTMENT OF TRANSPORTATION

CROSS SECTIONS PRE–STAGE
I–80

SCALE: 10:H 5:V | SHEET 24 OF 62 SHEETS | STA. 552+00.00 554+00.00

F.A.I. RTE.	SECTION	COUNTY	TOTAL SHEETS	SHEET NO.
I-80	FAI 80 22 BR	WILL	1201	896
		CONTRACT NO. 62R89		
		ILLINOIS	FED. AID PROJECT	

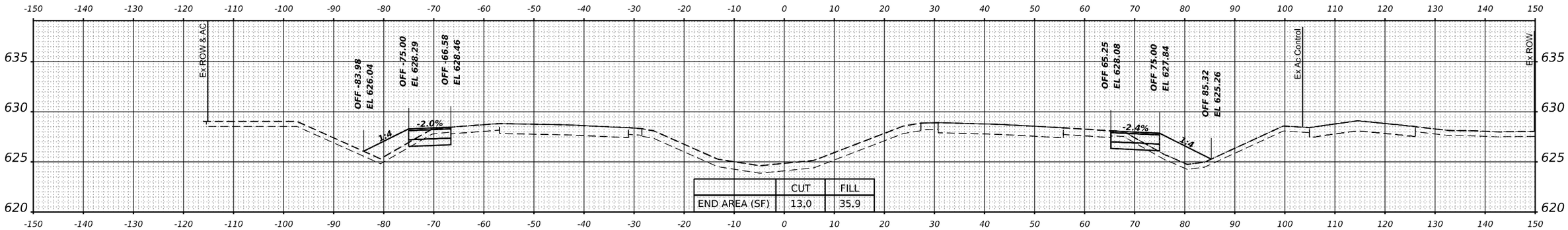

	CUT	FILL
END AREA (SF)	13.0	35.9

STA 557+00.00

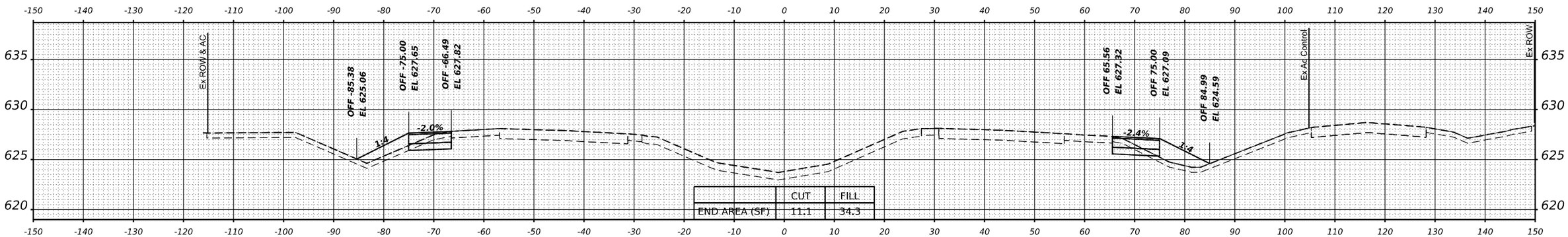

	CUT	FILL
END AREA (SF)	11.1	34.3

STA 556+00.00

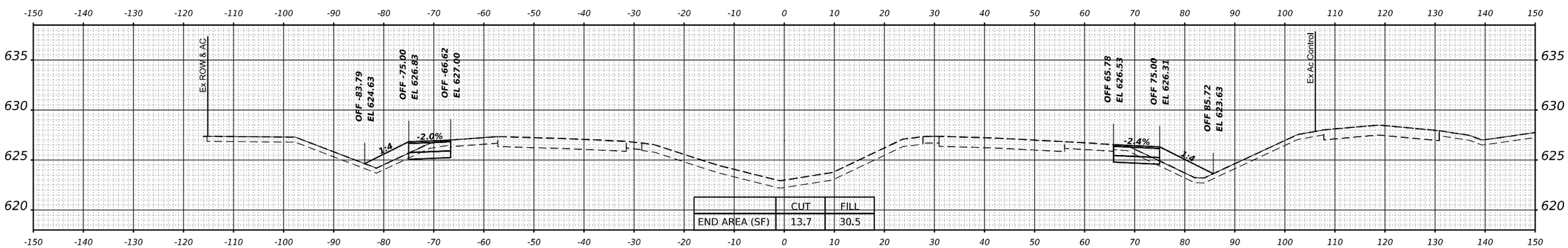

	CUT	FILL
END AREA (SF)	13.7	30.5

STA 555+00.00

FINAL SURVEY	BY	DATE
SURVEYED		
PLOTTED		
TEMPLATE		
AREAS		
AREAS CHECKED		
NOTE BOOK NO.		

ORIGINAL SURVEY	BY	DATE
SURVEYED		
PLOTTED		
TEMPLATE		
AREAS		
AREAS CHECKED		
NOTE BOOK NO.		

MODEL: BL_PR_I80_W = 555+00.00 [Sheet]
FILE NAME: pw://Transystems-pw.bentley.com:transyscorp-pw1-hosted/Documents/Projects_2018/CH401/401180022/02-TransSystems/CAD/03-3D/02-Container/PRE-STAGE/D1TSC-CONTAINER_PR_ROADWAY_PRE-STAGE-P4.dgn

TRANSYSTEMS

USER NAME = amkluver	DESIGNED - VLJ	REVISED -	
	DRAWN - MBM	REVISED -	
PLOT SCALE = 0.16666633 ' / in.	CHECKED - JMG	REVISED -	
PLOT DATE = 10/5/2023	DATE - 6/26/23	REVISED -	

STATE OF ILLINOIS
DEPARTMENT OF TRANSPORTATION

CROSS SECTIONS PRE-STAGE
I-80

SCALE: 10:H 5:V | SHEET 25 OF 62 SHEETS | STA. 555+00.00 | 557+00.00

F.A.I. RTE.	SECTION	COUNTY	TOTAL SHEETS	SHEET NO.
I-80	FAI 80 22 BR	WILL	1201	897
		CONTRACT NO. 62R89		
		ILLINOIS	FED. AID PROJECT	

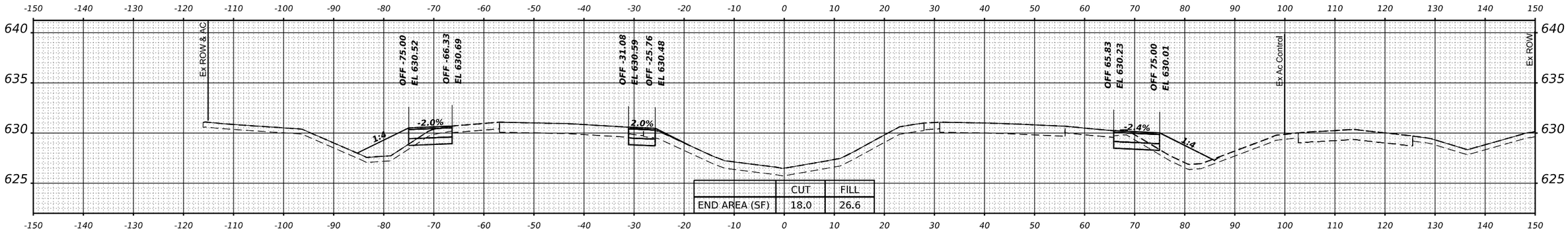

	CUT	FILL
END AREA (SF)	18.0	26.6

STA 560+00.00

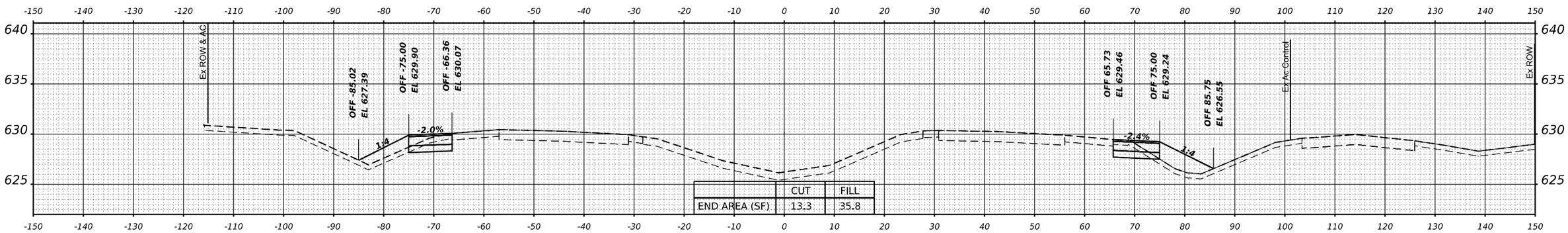

	CUT	FILL
END AREA (SF)	13.3	35.8

STA 559+00.00

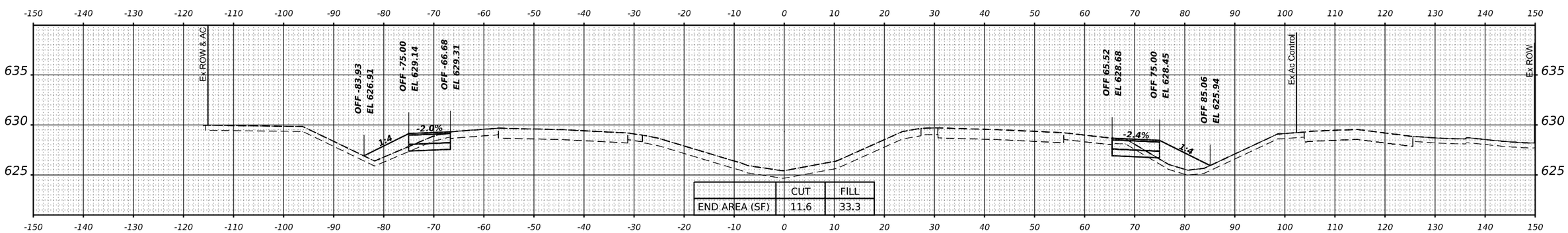

	CUT	FILL
END AREA (SF)	11.6	33.3

STA 558+00.00

FINAL SURVEY	BY	DATE
SURVEYED		
PLOTTED		
TEMPLATE		
AREAS		
AREAS CHECKED		
NOTE BOOK NO.		

ORIGINAL SURVEY	BY	DATE
SURVEYED		
PLOTTED		
TEMPLATE		
AREAS		
AREAS CHECKED		
NOTE BOOK NO.		

MODEL: BL_PR_I80_W-558+00.00 [Sheet]
FILE NAME: pw://transystems-pw.bentley.com:transyscorp-pw1-hosted/Documents/Projects_2018/CH401/401180622/02-TranSystems/CAD/05-3D/02-Container/PRE-STAGE/01TSC-CONTAINER_PR_ROADWAY_PRE-STAGE-P4.dgn

TRANSYSTEMS

USER NAME = amkluver	DESIGNED - VLJ	REVISED -	
	DRAWN - MBM	REVISED -	
PLOT SCALE = 0.16666633 ' / in.	CHECKED - JMG	REVISED -	
PLOT DATE = 10/5/2023	DATE - 6/26/23	REVISED -	

STATE OF ILLINOIS
DEPARTMENT OF TRANSPORTATION

CROSS SECTIONS PRE-STAGE
I-80

SCALE: 10:H 5:V | SHEET 26 OF 62 SHEETS | STA. 558+00.00 560+00.00

F.A.I. RTE.	SECTION	COUNTY	TOTAL SHEETS	SHEET NO.
I-80	FAI 80 22 BR	WILL	1201	898
		CONTRACT NO. 62R89		
	ILLINOIS	FED. AID PROJECT		

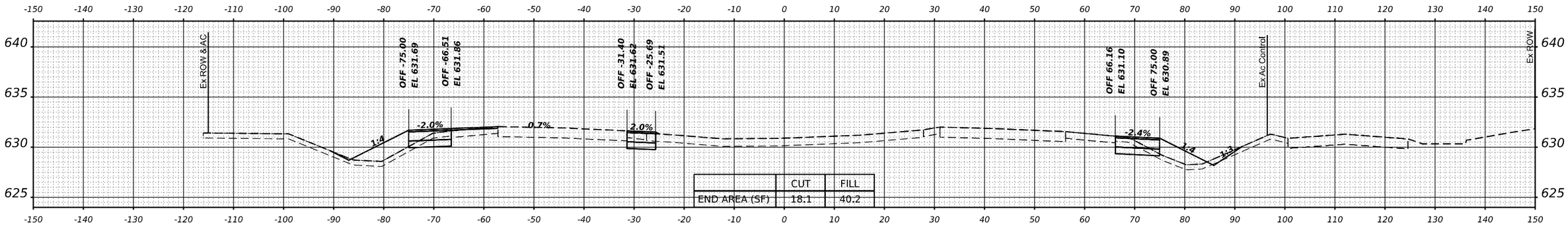

	CUT	FILL
END AREA (SF)	18.1	40.2

STA 563+00.00

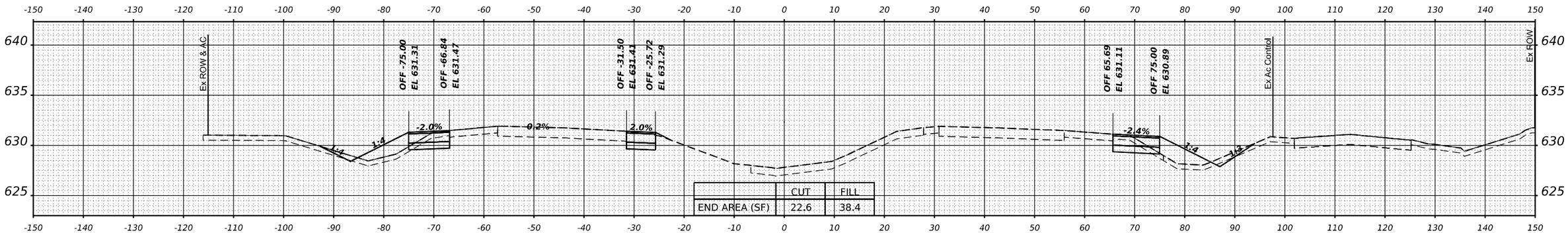

	CUT	FILL
END AREA (SF)	22.6	38.4

STA 562+00.00

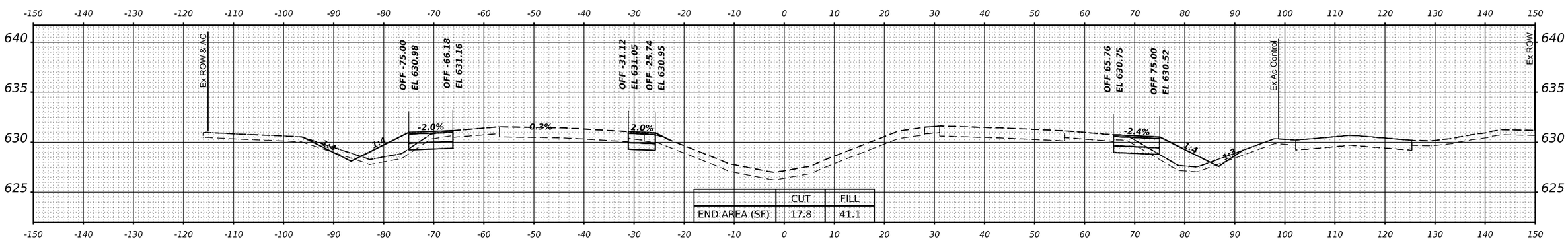

	CUT	FILL
END AREA (SF)	17.8	41.1

STA 561+00.00

FINAL SURVEY	BY	DATE
SURVEYED		
PLOTTED		
TEMPLATE		
AREAS		
AREAS CHECKED		
NOTE BOOK NO.		

ORIGINAL SURVEY	BY	DATE
SURVEYED		
PLOTTED		
TEMPLATE		
AREAS		
AREAS CHECKED		
NOTE BOOK NO.		

MODEL: BL_PR_I80_W = 561+00.00 [Sheet]
FILE NAME: pw://transystems-pw.bentley.com:transyscorp-pw1-hosted/Documents/Projects_2018/CH401/401180022/02-TrainSystems/CAD/05-3D/02-Container/PRE-STAGE/01TSC-CONTAINER_PR_ROADWAY_PRE-STAGE-P5.dgn

TRANSYSTEMS

USER NAME = amkluver	DESIGNED - VLJ	REVISED -	
	DRAWN - MBM	REVISED -	
PLOT SCALE = 0.16666633 ' / in.	CHECKED - JMG	REVISED -	
PLOT DATE = 10/5/2023	DATE - 6/26/23	REVISED -	

STATE OF ILLINOIS
DEPARTMENT OF TRANSPORTATION

CROSS SECTIONS PRE-STAGE
I-80

SCALE: 10:H 5:V | SHEET 27 OF 62 SHEETS | STA. 561+00.00 563+00.00

F.A.I. RTE.	SECTION	COUNTY	TOTAL SHEETS	SHEET NO.
I-80	FAI 80 22 BR	WILL	1201	899
		CONTRACT NO. 62R89		
		ILLINOIS	FED. AID PROJECT	

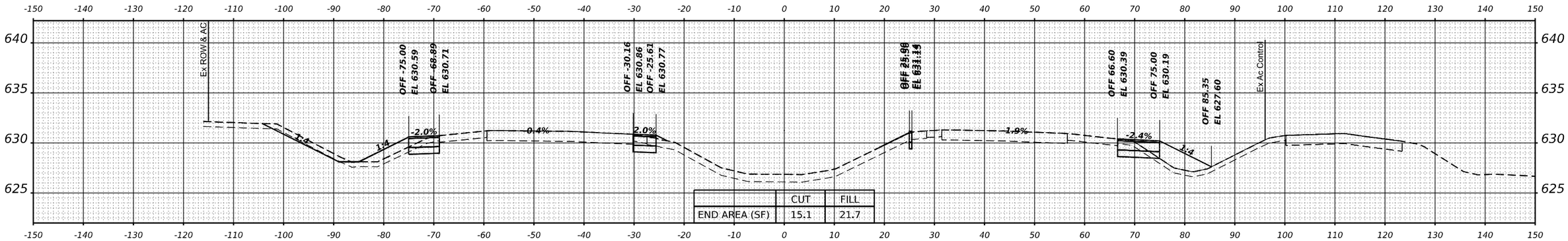

	CUT	FILL
END AREA (SF)	15.1	21.7

STA 566+00.00

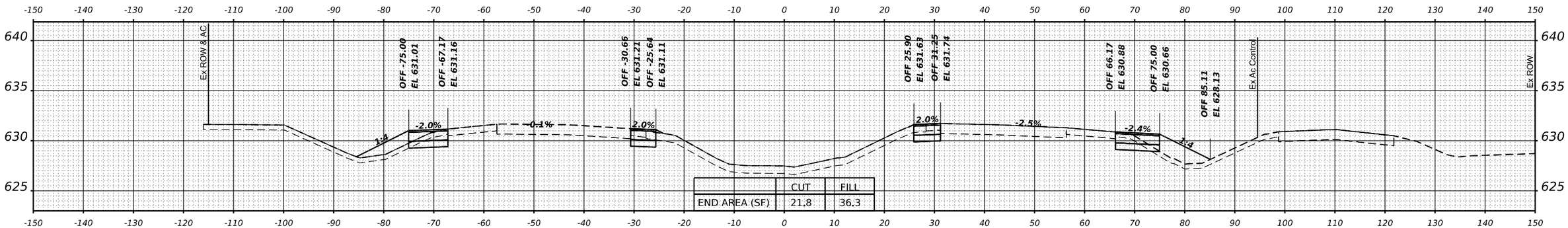

	CUT	FILL
END AREA (SF)	21.8	36.3

STA 565+00.00

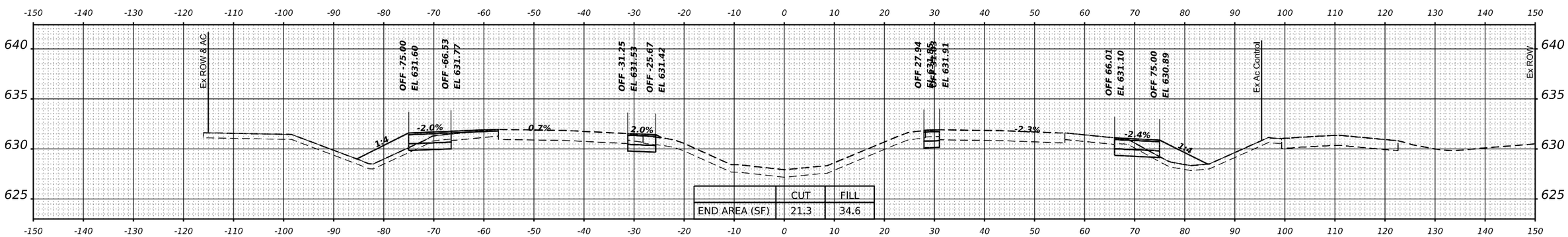

	CUT	FILL
END AREA (SF)	21.3	34.6

STA 564+00.00

FINAL SURVEY	BY	DATE
SURVEYED		
PLOTTED		
TEMPLATE		
AREAS		
AREAS CHECKED		
NOTE BOOK		
NO.		

ORIGINAL SURVEY	BY	DATE
SURVEYED		
PLOTTED		
TEMPLATE		
AREAS		
AREAS CHECKED		
NOTE BOOK		
NO.		

MODEL: BL_PR_I80_W = 564+00.00 [Sheet]
FILE NAME: pw://Transystems-pw.bentley.com:transyscorp-pw1-hosted/Documents/Projects_2018/CH401/401180022/02-TransSystems/CAD/03-3D/02-Container/PRE-STAGE/D1TSC-CONTAINER_PR_ROADWAY_PRE-STAGE-P5.dgn

TRANSYSTEMS

USER NAME = amkluver	DESIGNED - VLJ	REVISED -	
	DRAWN - MBM	REVISED -	
PLOT SCALE = 0.16666633 ' / in.	CHECKED - JMG	REVISED -	
PLOT DATE = 10/5/2023	DATE - 6/26/23	REVISED -	

STATE OF ILLINOIS
DEPARTMENT OF TRANSPORTATION

CROSS SECTIONS PRE-STAGE
I-80

SCALE: 10:H 5:V | SHEET 28 OF 62 SHEETS | STA. 564+00.00 566+00.00

F.A.I. RTE.	SECTION	COUNTY	TOTAL SHEETS	SHEET NO.
I-80	FAI 80 22 BR	WILL	1201	900
		CONTRACT NO. 62R89		
	ILLINOIS	FED. AID PROJECT		