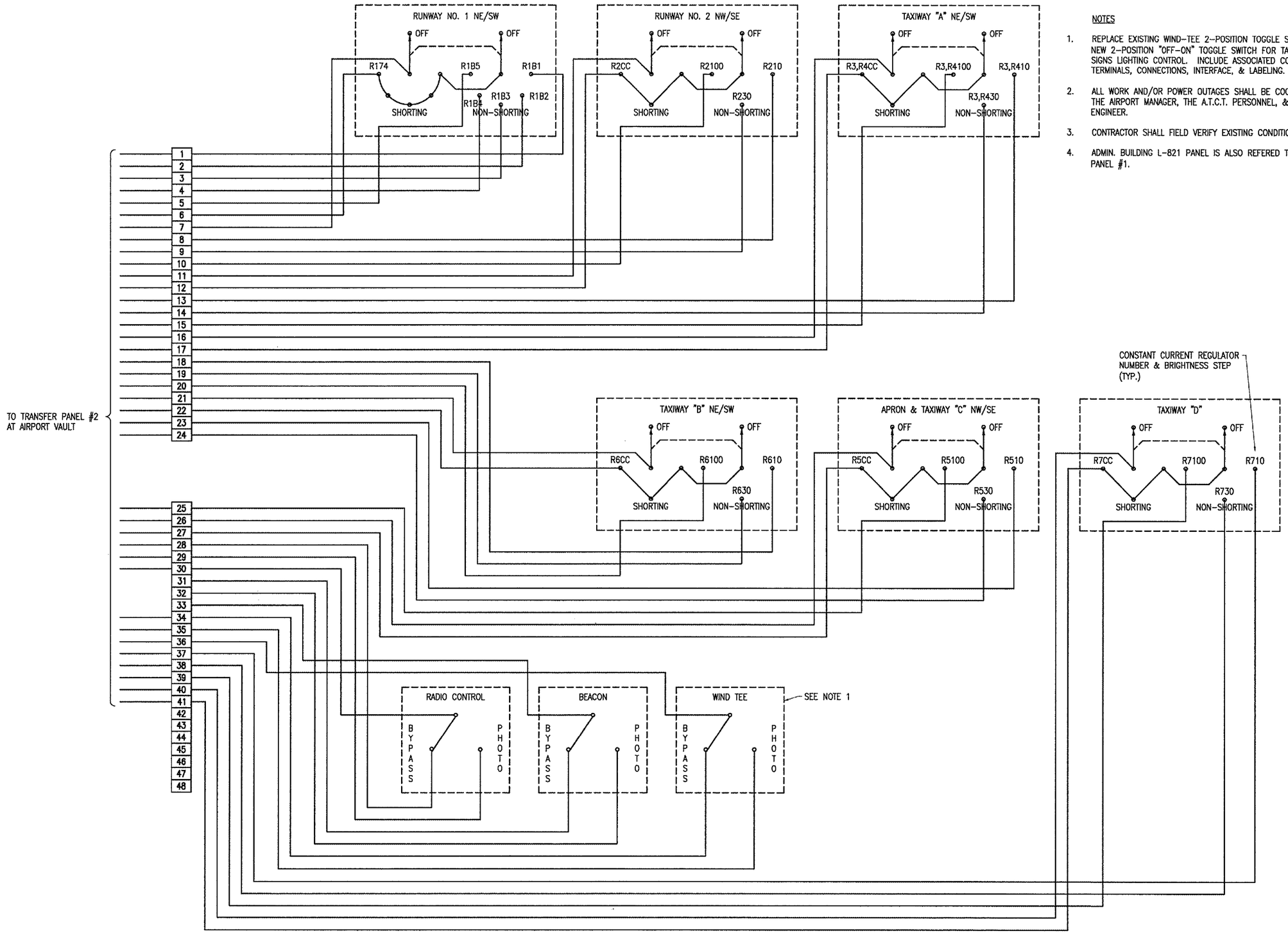

EXISTING ADMIN. BLDG. L-821 CONTROL PANEL SCHEMATIC

NOTES

1. REPLACE EXISTING WIND-TEE 2-POSITION TOGGLE SWITCH WITH A NEW 2-POSITION "OFF-ON" TOGGLE SWITCH FOR TAXI GUIDANCE SIGNS LIGHTING CONTROL. INCLUDE ASSOCIATED CONTROL WIRING, TERMINALS, CONNECTIONS, INTERFACE, & LABELING.
2. ALL WORK AND/OR POWER OUTAGES SHALL BE COORDINATED WITH THE AIRPORT MANAGER, THE A.T.C.T. PERSONNEL, & THE RESIDENT ENGINEER.
3. CONTRACTOR SHALL FIELD VERIFY EXISTING CONDITIONS.
4. ADMIN. BUILDING L-821 PANEL IS ALSO REFERED TO AS CONTROL PANEL #1.

WA057

HANSON

HANSON PROFESSIONAL SERVICES INC.

815 Commerce Drive, Suite 200
Oak Brook, Illinois 60523
Telephone: 630.990.3800
Fax: 630.990.3801

WAUKEGAN REGIONAL AIRPORT
WAUKEGAN PORT DISTRICT

3580 North McAree Road
Waukegan, Illinois 60087
Telephone: 847.244.0066
Fax: 847.244.3813

AIRFIELD SIGNAGE IMPROVEMENTS

AIP PROJECT NO. 3-17-0105-B35
IDA PROJECT NO. UGN-3650

No.	Drawing Issue Description	Date	By

Date
NOVEMBER 10, 2006

Sheet Title
EXISTING ADMIN. BLDG
L-821 CONTROL PANEL
SCHEMATIC

831-06A8004
Project Number

KNL	09/01/06
Layout By	Date
KNL	09/01/06
Designed By	Date
RMH	11/10/06
Reviewed By	Date
MV	--- | ---
Drawn By	

40
Sheet No.