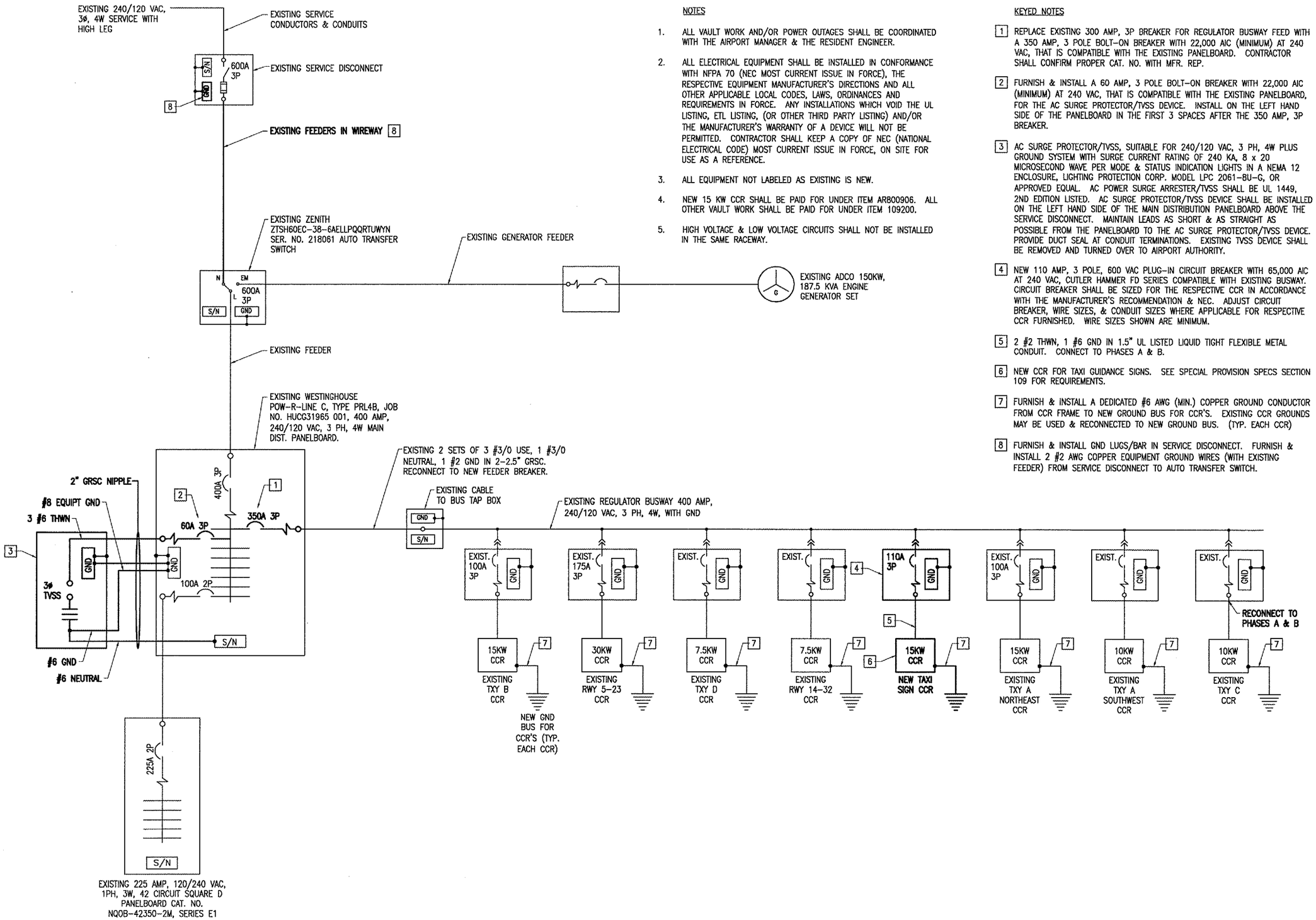

PROPOSED ELECTRICAL ONE LINE

NOTES

1. ALL VAULT WORK AND/OR POWER OUTAGES SHALL BE COORDINATED WITH THE AIRPORT MANAGER & THE RESIDENT ENGINEER.
2. ALL ELECTRICAL EQUIPMENT SHALL BE INSTALLED IN CONFORMANCE WITH NFPA 70 (NEC MOST CURRENT ISSUE IN FORCE), THE RESPECTIVE EQUIPMENT MANUFACTURER'S DIRECTIONS AND ALL OTHER APPLICABLE LOCAL CODES, LAWS, ORDINANCES AND REQUIREMENTS IN FORCE. ANY INSTALLATIONS WHICH VOID THE UL LISTING, ETL LISTING, (OR OTHER THIRD PARTY LISTING) AND/OR THE MANUFACTURER'S WARRANTY OF A DEVICE WILL NOT BE PERMITTED. CONTRACTOR SHALL KEEP A COPY OF NEC (NATIONAL ELECTRICAL CODE) MOST CURRENT ISSUE IN FORCE, ON SITE FOR USE AS A REFERENCE.
3. ALL EQUIPMENT NOT LABELED AS EXISTING IS NEW.
4. NEW 15 KW CCR SHALL BE PAID FOR UNDER ITEM ARB00906. ALL OTHER VAULT WORK SHALL BE PAID FOR UNDER ITEM 109200.
5. HIGH VOLTAGE & LOW VOLTAGE CIRCUITS SHALL NOT BE INSTALLED IN THE SAME RACEWAY.

KEYED NOTES

1. REPLACE EXISTING 300 AMP, 3P BREAKER FOR REGULATOR BUSWAY FEED WITH A 350 AMP, 3 POLE BOLT-ON BREAKER WITH 22,000 AIC (MINIMUM) AT 240 VAC, THAT IS COMPATIBLE WITH THE EXISTING PANELBOARD. CONTRACTOR SHALL CONFIRM PROPER CAT. NO. WITH MFR. REP.
2. FURNISH & INSTALL A 60 AMP, 3 POLE BOLT-ON BREAKER WITH 22,000 AIC (MINIMUM) AT 240 VAC, THAT IS COMPATIBLE WITH THE EXISTING PANELBOARD, FOR THE AC SURGE PROTECTOR/TVSS DEVICE. INSTALL ON THE LEFT HAND SIDE OF THE PANELBOARD IN THE FIRST 3 SPACES AFTER THE 350 AMP, 3P BREAKER.
3. AC SURGE PROTECTOR/TVSS, SUITABLE FOR 240/120 VAC, 3 PH, 4W PLUS GROUND SYSTEM WITH SURGE CURRENT RATING OF 240 KA, 8 x 20 MICROSECOND WAVE PER MODE & STATUS INDICATION LIGHTS IN A NEMA 12 ENCLOSURE, LIGHTING PROTECTION CORP. MODEL LPC 2061-BU-G, OR APPROVED EQUAL. AC POWER SURGE ARRESTER/TVSS SHALL BE UL 1449, 2ND EDITION LISTED. AC SURGE PROTECTOR/TVSS DEVICE SHALL BE INSTALLED ON THE LEFT HAND SIDE OF THE MAIN DISTRIBUTION PANELBOARD ABOVE THE SERVICE DISCONNECT. MAINTAIN LEADS AS SHORT & AS STRAIGHT AS POSSIBLE FROM THE PANELBOARD TO THE AC SURGE PROTECTOR/TVSS DEVICE. PROVIDE DUCT SEAL AT CONDUIT TERMINATIONS. EXISTING TVSS DEVICE SHALL BE REMOVED AND TURNED OVER TO AIRPORT AUTHORITY.
4. NEW 110 AMP, 3 POLE, 600 VAC PLUG-IN CIRCUIT BREAKER WITH 65,000 AIC AT 240 VAC, CUTLER HAMMER FD SERIES COMPATIBLE WITH EXISTING BUSWAY. CIRCUIT BREAKER SHALL BE SIZED FOR THE RESPECTIVE CCR IN ACCORDANCE WITH THE MANUFACTURER'S RECOMMENDATION & NEC. ADJUST CIRCUIT BREAKER, WIRE SIZES, & CONDUIT SIZES WHERE APPLICABLE FOR RESPECTIVE CCR FURNISHED. WIRE SIZES SHOWN ARE MINIMUM.
5. 2 #2 THWN, 1 #6 GND IN 1.5" UL LISTED LIQUID TIGHT FLEXIBLE METAL CONDUIT. CONNECT TO PHASES A & B.
6. NEW CCR FOR TAXI GUIDANCE SIGNS. SEE SPECIAL PROVISION SPECS SECTION 109 FOR REQUIREMENTS.
7. FURNISH & INSTALL A DEDICATED #6 AWG (MIN.) COPPER GROUND CONDUCTOR FROM CCR FRAME TO NEW GROUND BUS FOR CCR'S. EXISTING CCR GROUNDS MAY BE USED & RECONNECTED TO NEW GROUND BUS. (TYP. EACH CCR)
8. FURNISH & INSTALL GND LUGS/BAR IN SERVICE DISCONNECT. FURNISH & INSTALL 2 #2 AWG COPPER EQUIPMENT GROUND WIRES (WITH EXISTING FEEDER) FROM SERVICE DISCONNECT TO AUTO TRANSFER SWITCH.

WA057

HANSON

HANSON PROFESSIONAL SERVICES INC.

815 Commerce Drive, Suite 200
Oak Brook, Illinois 60523
Telephone: 630.990.3800
Fax: 630.990.3801

WAUKEGAN REGIONAL AIRPORT
WAUKEGAN PORT DISTRICT

3580 North McAree Road
Waukegan, Illinois 60087
Telephone: 847.244.0066
Fax: 847.244.3813

AIRFIELD SIGNAGE IMPROVEMENTS

AIP PROJECT NO. 3-17-0105-B35
IDA PROJECT NO. UGN-3650

No.	Drawing Issue Description	Date	By

Date
NOVEMBER 10, 2006

Sheet Title
PROPOSED ELECTRICAL ONE LINE

831-06A8004 — Project Number
KNL 09/01/06 — Layout By / Date
KNL 09/01/06 — Designed By / Date
RMH 11/10/06 — Reviewed By / Date
MV — Drawn By

32
Sheet No.