CONTRACT NO. 76A28

F.A.I. RTE.	SECTION	COUNTY	TOTAL SHEETS	SHEET NO.
55/70	82-4I-1	ST. CLAIR	19	11
STA. _____		TO STA. _____		
FED. ROAD DIST. NO. _	ILLINOIS	FED. AID PROJECT		

TRUSS UNIT TABLE

Structure Number	Station	Design Truss Type	Exterior Units (2)			Interior Unit				Upper & Lower Chord		Verticals; Horizontals; Vertical, Horizontal, and Interior Diagonals		Camber at Midspan	Splicing Flange					
			No. Panels per Unit	Unit Lgth.(L_e)	Panel Lgth.(P)	No. Req'd.	No. Panels per Unit	Unit Lgth.(L_i)	Panel Lgth.(P)	O.D.	Wall	O.D.	Wall		Bolts		Weld Sizes		A	B
															No./Splice	Dia.	W	W_1		
8S082I055R001.4	105+67.6	III-A	5	27' 8 1/2"	5' 2"	1	6	32' 3"	5' 2"	7"	5/16"	3 1/4"	5/16"	1.75"	6	1"	7/16"	5/16"	11 1/2"	15"

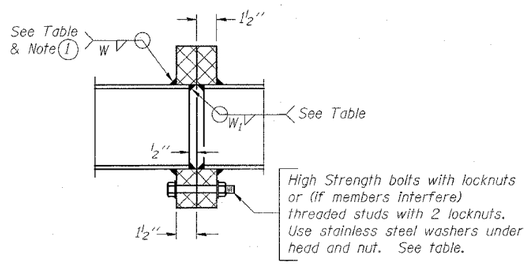

SECTION B-B

(1) Splicing Flanges shall be attached to each truss unit with the truss shop assembled to camber shown. Truss units shall be in proper alignment and flange surfaces shall be shop bolted into full contact before welding. Sufficient external welds or tacks shall be made to secure flanges until remaining welds are made after disassembly. Adjacent flanges shall be "match marked" to insure proper field assembly.

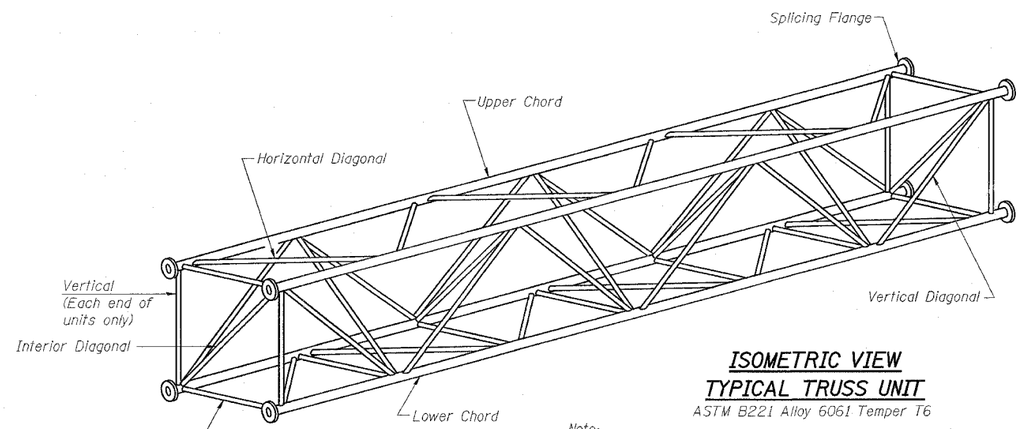

ISOMETRIC VIEW TYPICAL TRUSS UNIT

ASTM B221 Alloy 6061 Temper T6

Note:
Units shall be shipped individually with adequate provision to prevent detrimental motion during transport. This may require ropes between horizontals and diagonals or energy dissipating (elastic) ties to the vehicle. The Contractor is responsible for maintaining the configuration and protection of the units.

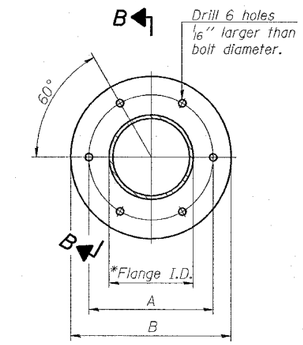

TRUSS TYPES I-A, II-A, & III-A

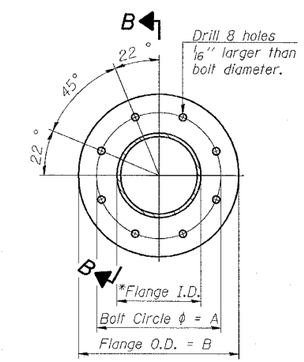

TRUSS TYPES II-A & III-A

SPLICING FLANGES

ASTM B221, Alloy 6061-T6
or ASTM B209, Alloy 6061-T651
*To fit O.D. of Chord with maximum gap of 1/16".

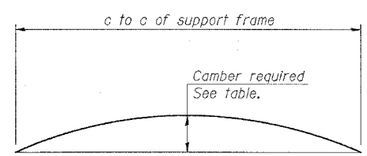

CAMBER DIAGRAM

Camber curve shown is theoretical. Actual camber attained by slope changes at splices between units.

CAMBER ATTAINMENT EXAMPLES:

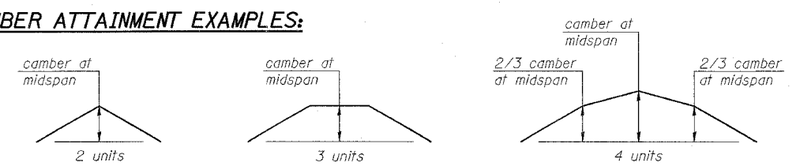

Camber shown is for fabrication only, measured with truss fully supported. (No-load condition)

NUMBER	REVISION	DATE

OVERHEAD SIGN STRUCTURES
ALUMINUM TRUSS DETAILS
FOR TRUSS TYPES I-A, II-A AND III-A

ILLINOIS DEPARTMENT OF TRANSPORTATION

F.A.I. ROUTE 55/70
SECTION 82-4I-1
ST. CLAIR COUNTY

PLOT DATE = $DATE$
FILE NAME = $FILEL$
PLOT SCALE = $SCALE$
REFERENCE = REF

OS4-A-2 7/01/2006