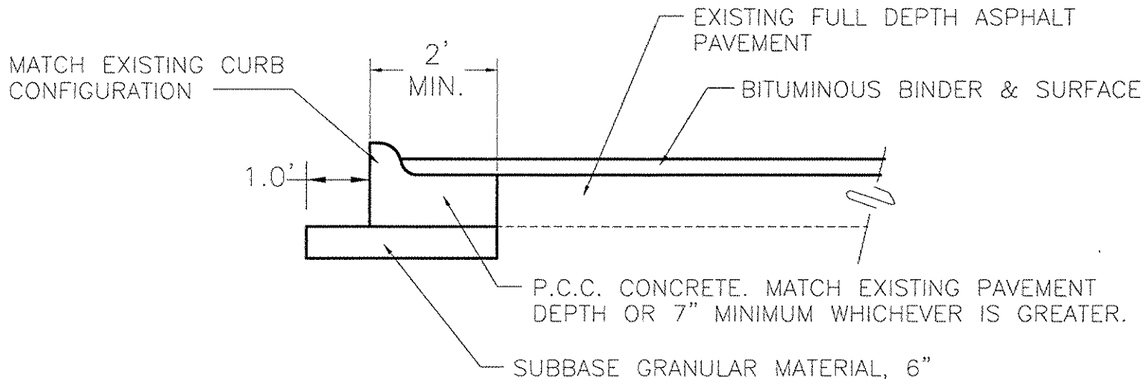

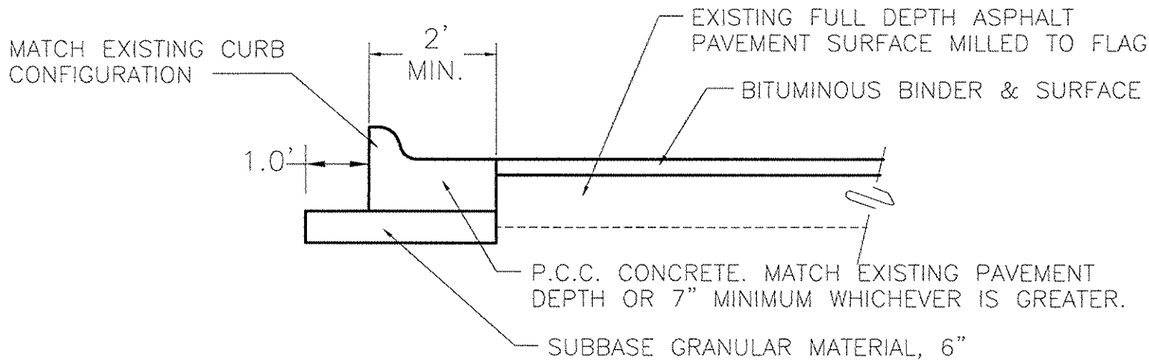

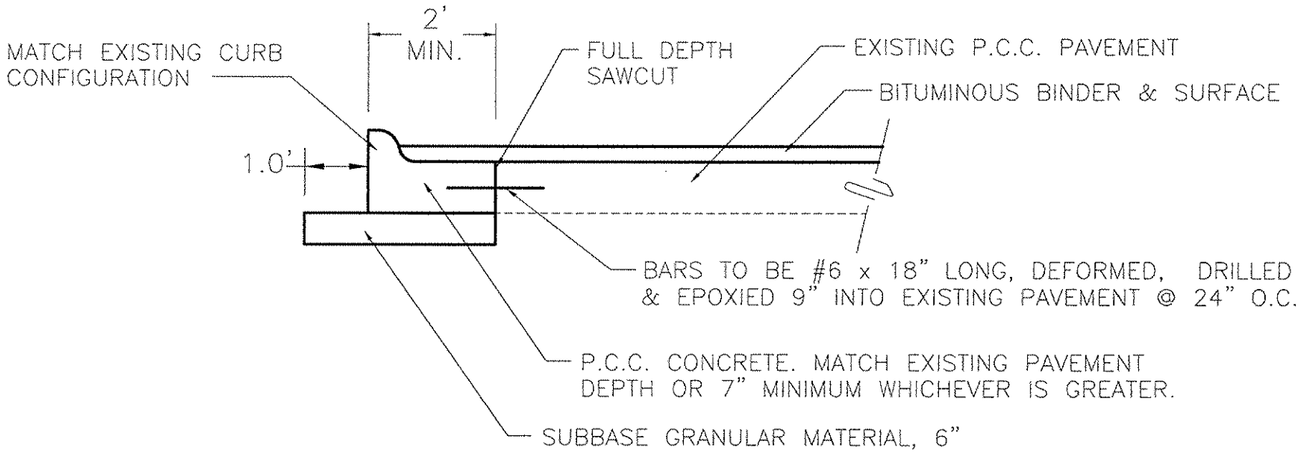

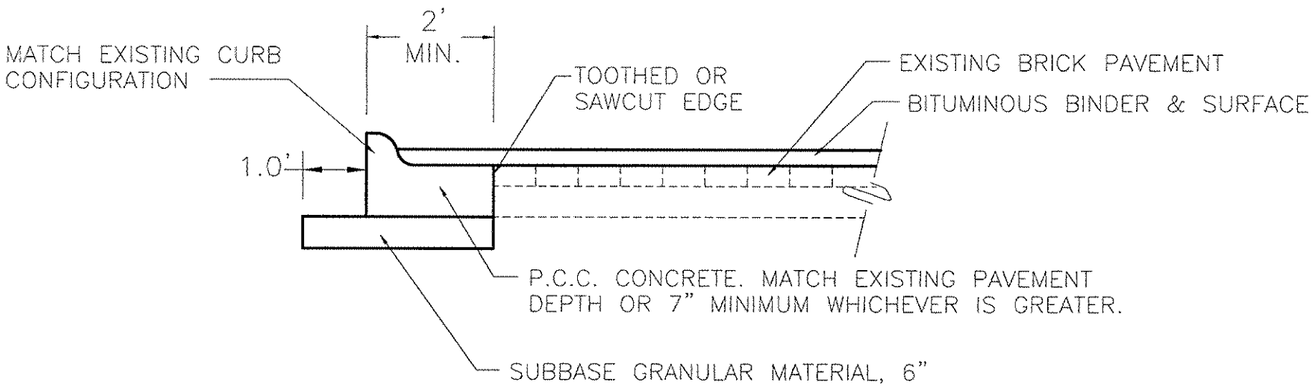

REMOVE & REPLACE COMBINATION CURB & GUTTER		
DATE 5/05	CITY OF MOLINE STANDARD	SHEET 13/16

85567