*Omit weld at seal opening.
**When joint is fixed, dimension is set at $1\frac{1}{2}''$.

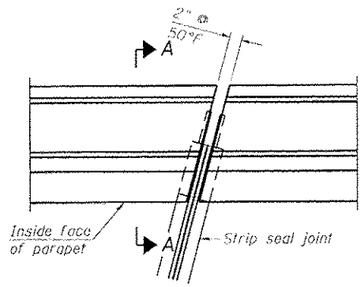

PLAN
(For skews ≤ 30°)

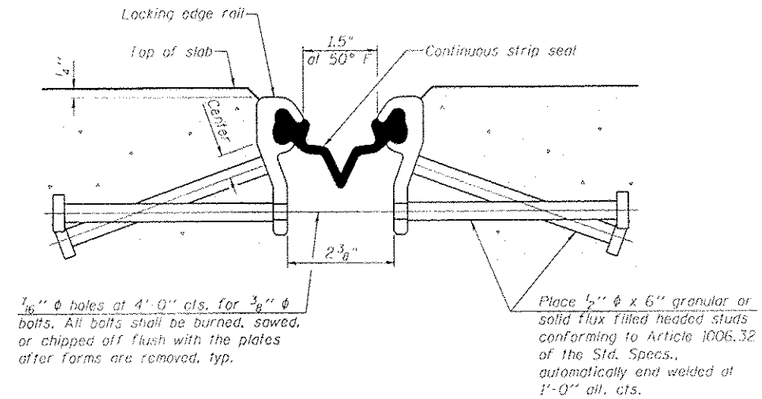

SECTION THRU STRIP SEAL JOINT
FOR OVERLAY OVER DECK BEAMS

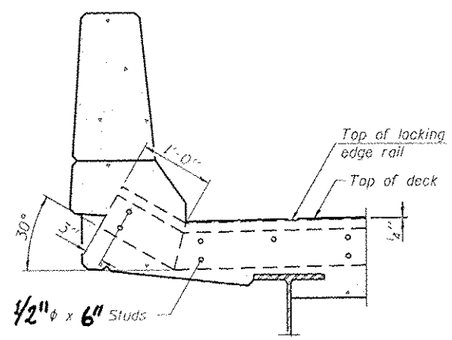

SECTION A-A

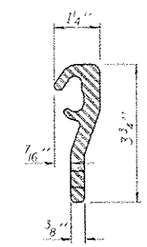

LOCKING EDGE RAIL

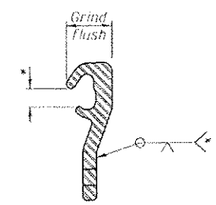

LOCKING EDGE RAIL SPLICE

Notes:

The strip seal shall be made continuous and shall have a minimum thickness of ¼". The configuration of the strip seal shall match the configuration of the Locking Edge Rails.

The height and thickness of the Locking Edge Rails shown are minimum dimensions. The actual configuration of the Locking Edge Rails and matching strip seal may vary from manufacturer to manufacturer. Flanged edge rails will not be allowed.

The inside of the Locking Edge Rail groove shall be free of weld residue.

Locking Edge Rails may be spliced at slope discontinuities and stage construction joints.

The manufacturer's recommended installation methods shall be followed.

All steel components shall be galvanized after fabrication according to Article 520.03 of the Standard Specifications.

BILL OF MATERIAL

Item	Unit	Total
Preformed Joint Strip Seal	Foot	267.0

FILE NAME = 0602238-76A89-11-Strip_Seal.dgn

TranSystems

USER NAME = OMGolios	X	DESIGNED - WAE	REVISED -	
	X	CHECKED - FAS	REVISED -	
PLOT SCALE = 0.0000 '/ in.	X	DRAWN - OMG	REVISED -	
PLOT DATE = 8/24/2012	X	CHECKED - SLZ	REVISED -	

STATE OF ILLINOIS
DEPARTMENT OF TRANSPORTATION

SHALLOW STRIP SEAL JOINT
STRUCTURE NO. 060-0238 & 060-0239
SHEET NO. 11 OF 15 SHEETS

F.A.I. RTE.	SECTION	COUNTY	TOTAL SHEETS	SHEET NO.
255	60-(7,8) RS-2	MADISON	261	206
		CONTRACT NO. 76A89		
		ILLINOIS FED. AID PROJECT		

8/24/2012