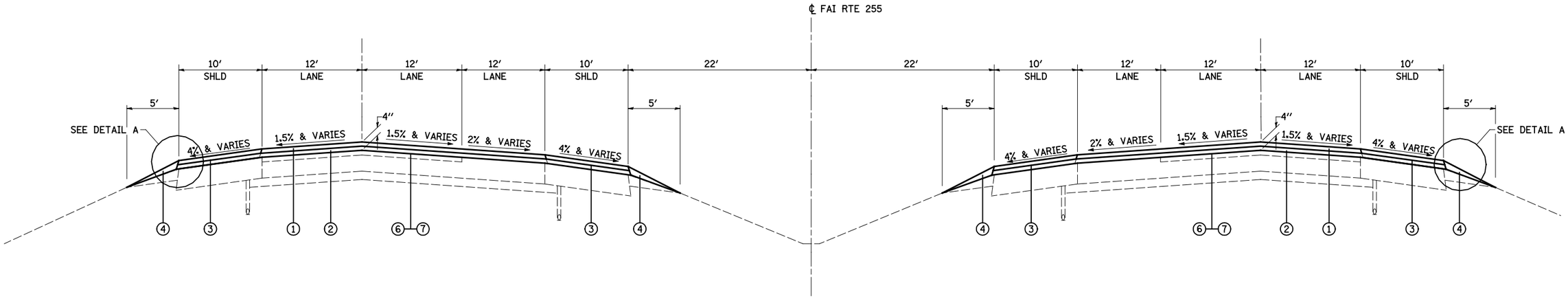

SOUTH BOUND

STA 1246+52 TO STA 1272+75 (2 OUTER LANES)
STA 1275+25 TO STA 1278+50 (2 INNER LANES)
STA 1280+00 TO STA 1282+25 (MIDDLE LANE)
STA 1298+70 TO STA 1301+22 (2 OUTER LANES)

PROPOSED TYPICAL TANGENT SECTION

PREVIOUSLY RESURFACED 2 LANE SECTION

NORTH BOUND

STA 1246+31 TO STA 1285+80 (2 OUTER LANES)
STA 1285+80 TO STA 1287+55 (MIDDLE LANE)
STA 1295+91 TO STA 1301+48 (2 OUTER LANES)

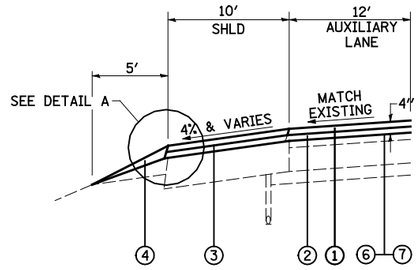

SOUTH BOUND CONCRETE AUXILIARY LANES

STA 1246+52 TO STA 1257+25

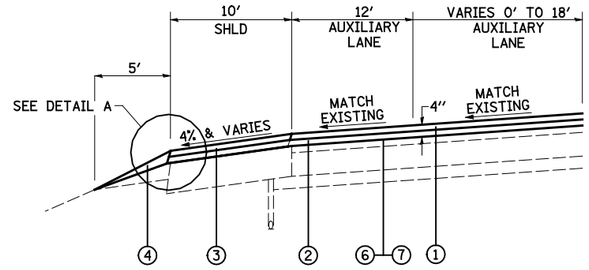

SOUTH BOUND AUXILIARY LANES

STA 1257+25 TO STA 1273+13

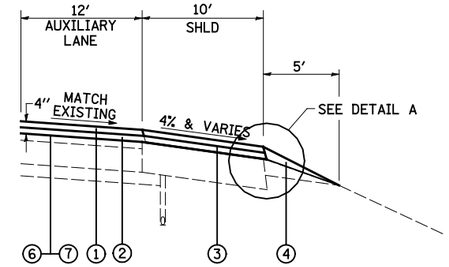

NORTH BOUND CONCRETE AUXILIARY LANES

STA 1261+30 TO STA 1280+88

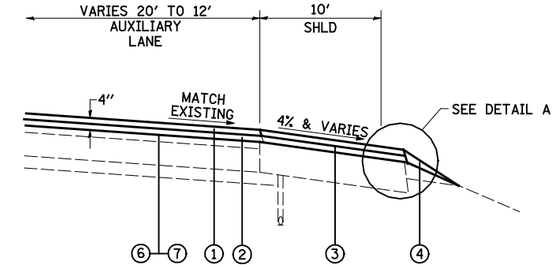

NORTH BOUND AUXILIARY LANES

STA 1257+30 TO STA 1261+30

LEGEND

1. PROPOSED POLYMERIZED HOT-MIX ASPHALT SURFACE COURSE, STONE MATRIX ASPHALT, N80, 2″ AND VARIES
2. PROPOSED POLYMERIZED HOT-MIX ASPHALT SURFACE COURSE, STONE MATRIX ASPHALT, N80, 2″ (LOWER LIFT)
3. PROPOSED HOT-MIX ASPHALT SHOULDERS, 4″ AND VARIES
4. PROPOSED AGGREGATE WEDGE SHOULDERS, TYPE B, VARIES 4″ TO 0″
5. PROPOSED AGGREGATE SHOULDERS, TYPE B, VARIES 4″ TO 0″
6. PROPOSED BITUMINOUS MATERIALS (PRIME COAT)
7. PROPOSED AGGREGATE (PRIME COAT)
8. PROPOSED HOT-MIX ASPHALT SHOULDER CURB
9. PROPOSED HOT-MIX ASPHALT SHOULDERS, 2″ AND VARIES

REMOVAL ITEMS

NOTE: FOR LIMITS OF REMOVAL ITEMS SEE REMOVAL SHEETS

FOR DETAIL A SEE SHEET 2 OF 9

FILE NAME = $FILEL$	USER NAME = Paul	DESIGNED - ESW	REVISED -	STATE OF ILLINOIS DEPARTMENT OF TRANSPORTATION	PROPOSED TYPICAL SECTIONS FAI ROUTE 255	F.A.I RTE.	SECTION	COUNTY	TOTAL SHEETS	SHEET NO.
		DRAWN - PDB	REVISED -			255	60-(7,8)RS-2	MADISON	261	25
	PLOT SCALE = 100.0000 ′ / IN.	CHECKED - BRM	REVISED -					CONTRACT NO. 76A89		
	PLOT DATE = 7/31/2012	DATE - 8-29-11	REVISED -		SCALE: SHEET NO. 3 OF 9 SHEETS STA. TO STA.		ILLINOIS FED. AID PROJECT			