DIMENSIONS OF STRAIGHT BARS

Bar	Size	Length	Bar	Size	Length
b	No. 5 (No. 16)	6′-3″ (1.9 m)	b_{13}	No. 4 (No. 13)	15′-0″ (4.75 m)
b_1	No. 5 (No. 16)	6′-9″ (2.06 m)	b_{14}	No. 4 (No. 13)	15′-6″ (4.72 m)
b_2	No. 5 (No. 16)	7′-3″ (2.21 m)	b_{15}	No. 4 (No. 13)	16′-6″ (5.03 m)
b_3	No. 5 (No. 16)	8′-0″ (2.44 m)	b_{16}	No. 4 (No. 13)	17′-0″ (5.18 m)
b_4	No. 4 (No. 13)	8′-3″ (2.51 m)	b_{17}	No. 4 (No. 13)	19′-0″ (5.79 m)
b_5	No. 4 (No. 13)	9′-0″ (2.74 m)	h_8	No. 4 (No. 13)	4′-9″ (1.45 m)
b_6	No. 4 (No. 13)	10′-0″ (3.05 m)	h_9	No. 4 (No. 13)	6′-3″ (1.9 m)
b_7	No. 4 (No. 13)	10′-6″ (3.2 m)	h_{10}	No. 4 (No. 13)	5′-3″ (1.6 m)
b_8	No. 4 (No. 13)	11′-3″ (3.43 m)	h_{11}	No. 4 (No. 13)	7′-3″ (2.2 m)
b_9	No. 4 (No. 13)	12′-0″ (3.66 m)	h_{12}	No. 4 (No. 13)	6′-0″ (1.83 m)
b_{10}	No. 4 (No. 13)	13′-0″ (3.96 m)	h_{13}	No. 4 (No. 13)	8′-0″ (2.44 m)
b_{11}	No. 4 (No. 13)	13′-6″ (4.11 m)	h_{14}	No. 4 (No. 13)	6′-6″ (1.98 m)
b_{12}	No. 4 (No. 13)	14′-3″ (4.34 m)	h_{15}	No. 4 (No. 13)	8′-9″ (2.67 m)
			w	No. 4 (No. 13)	4′-0″ (1.22 m)

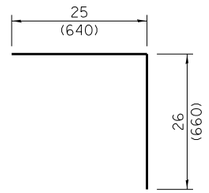

No. 4 (No. 13) BAR–d

BARS IN ONE END SECTION

42 (1050) Pipe				48 (1200) Pipe				54 (1350) Pipe				60 (1500) Pipe			
D42-1½ (D1.05-1½)		D42-2 (D1.05-2)		D48-1½ (D1.2-1½)		D48-2 (D1.2-2)		D54-1½ (D1.35-1½)		D54-2 (D1.35-2)		D60-1½ (D1.5-1½)		D60-2 (D1.5-2)	
Bars	No.	Bars	No.	Bars	No.	Bars	No.	Bars	No.	Bars	No.	Bars	No.	Bars	No.
d	8	d	9	d	9	d	10	d	10	d	12	d	11	d	13
b	2	b	2	b_1	2	b_1	2	b_2	2	b_2	2	b_3	2	b_3	2
b_5	1	b_4	1	b_7	1	b_6	1	b_5	1	b_5	1	b_7	1	b_7	1
b_8	2	b_8	1	b_{10}	2	b_{10}	1	b_9	1	b_9	1	b_{11}	1	b_{11}	1
		b_{11}	2			b_{14}	2	b_{12}	2	b_{13}	1	b_{14}	2	b_{15}	1
										b_{16}	2			b_{17}	2
h	2	h_1	2	h_2	2	h_1	2	h_4	2	h_5	2	h_6	2	h_7	2
h_8	4	h_9	4	h_{10}	4	h_9	4	h_{12}	4	h_{13}	4	h_{14}	4	h_{15}	4
v_3	2	v_3	2	v_2	2	v_2	2	v_1	2	v_1	2	v	2	v	4
v_4	2	v_4	2	v_3	2	v_3	4	v_2	2	v_2	4	v_1	2	v_1	2
v_5	2	v_5	4	v_4	2	v_4	2	v_3	2	v_3	2	v_2	2	v_2	2
v_6	2	v_6	2	v_5	2	v_5	2	v_4	2	v_4	2	v_3	2	v_3	4
v_7	2	v_7	2	v_6	2	v_6	4	v_5	2	v_5	4	v_4	2	v_4	2
								v_6	2	v_6	2	v_5	4	v_5	4
w	2	w	2	w	2	w	2	w	2	w	2	w	2	w	2

DIMENSIONS OF BENT BARS

No. 5 (No. 16) - bars v to v_7			No. 5 (No. 16) - bars h to h_7			
BARS	c	TOTAL LENGTH	BARS	a	b	TOTAL LENGTH
v	6′-0″ (1.83 m)	8′-0″ (2.44 m)	h	4′-8″ (1.42 m)	5′-2″ (1.57 m)	15′-0″ (4.56 m)
v_1	5′-6″ (1.68 m)	7′-6″ (2.29 m)	h_1	4′-8″ (1.42 m)	6′-8″ (2.03 m)	18′-0″ (5.48 m)
v_2	5′-0″ (1.52 m)	7′-0″ (2.13 m)	h_2	5′-3″ (1.6 m)	5′-10½″ (1.79 m)	17′-0″ (5.18 m)
v_3	4′-6″ (1.37 m)	6′-6″ (1.98 m)	h_3	5′-3″ (1.6 m)	7′-6″ (2.29 m)	20′-3″ (6.18 m)
v_4	4′-0″ (1.22 m)	6′-0″ (1.83 m)	h_4	5′-10″ (1.78 m)	6′-7″ (2.01 m)	19′-0″ (5.78 m)
v_5	3′-6″ (1.07 m)	5′-6″ (1.68 m)	h_5	5′-10″ (1.78 m)	8′-4″ (2.54 m)	22′-6″ (6.86 m)
v_6	36 (920)	5′-0″ (1.53 m)	h_6	6′-5″ (1.96 m)	7′-2″ (2.18 m)	20′-9″ (6.32 m)
v_7	24 (610)	4′-6″ (1.22 m)	h_7	6′-5″ (1.96 m)	9′-3½″ (2.83 m)	25′-0″ (7.59 m)

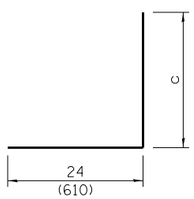

BARS – v to v_7

DIMENSIONS AND QUANTITIES

Design No.	Nominal Inside Dia. of Pipe	Slope of Wing Walls	Dimensions A	B	C	D	E	F	Concrete 2 End Secs. cu. yds. (m^3)	Reinf. Bars 2 End Secs. lbs. (kg)
D42-1½ (D1.05-1½)	42 (1050)	1:1½	3′-4″ (1.01 m)	26 (660)	4′-4½″ (1.33 m)	4′-10″ (1.48 m)	11′-10½″ (3.63 m)	5′-0″ (1.52 m)	4.8 (3.7)	330 (150)
D42-2 (D1.05-2)	42 (1050)	1:2	4′-5″ (1.35 m)	26 (660)	1.33 m (1.33 m)	4′-10″ (1.48 m)	14′-0½″ (4.29 m)	6′-6¼″ (1.99 m)	6.2 (4.7)	400 (180)
D48-1½ (D1.2-1½)	48 (1200)	1:1½	3′-9″ (1.14 m)	29 (740)	4′-11″ (1.5 m)	5′-5″ (1.65 m)	13′-3½″ (4.05 m)	5′-7″ (1.7 m)	5.8 (4.4)	360 (163)
D48-2 (D1.2-2)	48 (1200)	1:2	5′-0″ (1.52 m)	29 (740)	4′-11″ (1.5 m)	5′-5″ (1.65 m)	15′-9½″ (4.82 m)	7′-4¼″ (2.24 m)	7.6 (5.8)	460 (210)
D54-1½ (D1.35-1½)	54 (1350)	1:1½	4′-2″ (1.27 m)	32 (815)	5′-5½″ (1.66 m)	6′-0″ (1.83 m)	14′-8½″ (4.49 m)	6′-2″ (1.88 m)	6.8 (5.2)	430 (195)
D54-2 (D1.35-2)	54 (1350)	1:2	5′-7″ (1.7 m)	32 (815)	5′-5½″ (1.66 m)	6′-0″ (1.83 m)	17′-6½″ (5.35 m)	8′-2″ (2.49 m)	9.2 (7.0)	550 (250)
D60-1½ (D1.5-1½)	60 (1500)	1:1½	4′-7″ (1.4 m)	35 (890)	6′-0″ (1.83 m)	6′-7″ (2.0 m)	16′-1½″ (4.91 m)	6′-9″ (2.06 m)	8.0 (6.1)	490 (223)
D60-2 (D1.5-2)	60 (1500)	1:2	6′-2″ (1.88 m)	35 (890)	6′-0″ (1.83 m)	6′-7″ (2.0 m)	19′-3½″ (5.88 m)	9′-0″ (2.74 m)	10.8 (8.3)	630 (285)

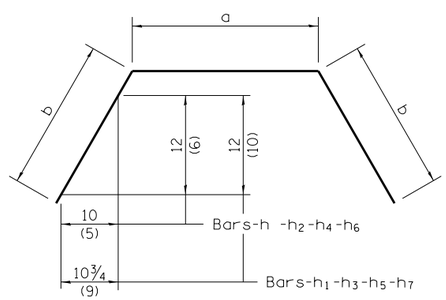

BARS – h to h_7

FILE NAME = D468409-SHT-18-19-DETAILS-REINFORCED CONCRETE END SECTIONS FOR PIPE CULVERTS 42-60.DGN	USER NAME = zach1	DESIGNED - DBS	REVISED -	STATE OF ILLINOIS DEPARTMENT OF TRANSPORTATION	SPECIAL DETAILS REINFORCED CONCRETE END SECTIONS FOR PIPE CULVERTS 42″ – 60″	F.A.P. RTE. 313	SECTION 7-2 ; 6-1	COUNTY HENDERSON	TOTAL SHEETS 976	SHEET NO. 540
	PLOT SCALE = 100.0000 ′ / in.	CHECKED - CSB	REVISED -					CONTRACT NO. 68409		
	PLOT DATE = 10/16/2012	DATE - 10/2012	REVISED -		SCALE: SHEET NO. 19 OF 21 SHEETS STA. TO STA.			ILLINOIS FED. AID PROJECT		