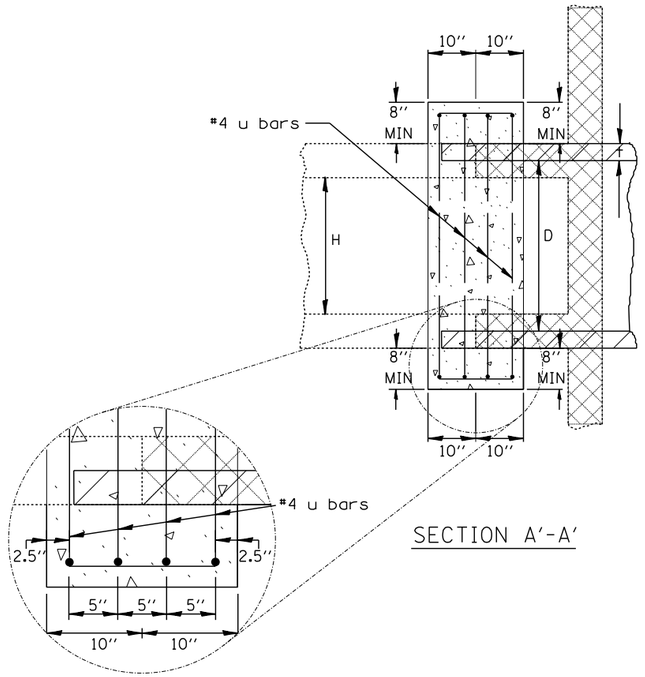

SECTION A'-A'

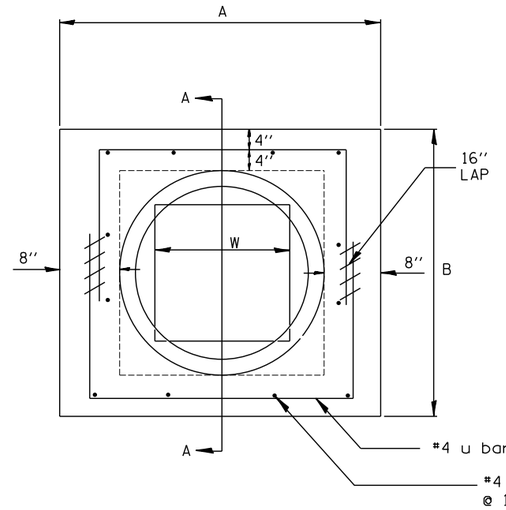

END VIEW

DOWN STREAM

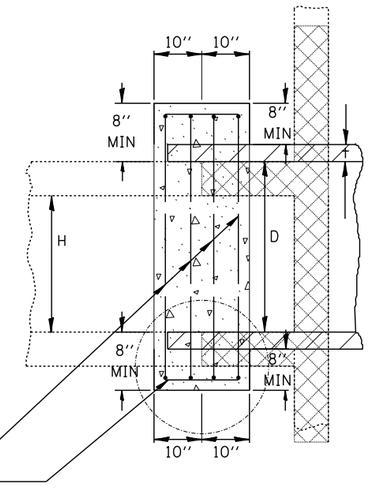

SECTION A'-A'

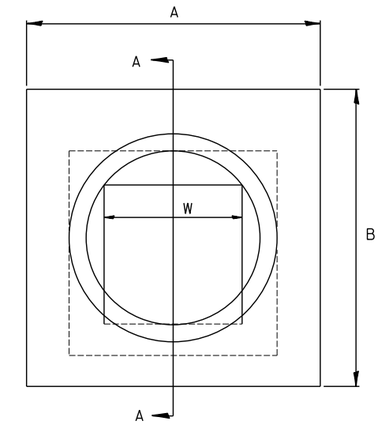

END VIEW

UP STREAM

Existing Headwall Removal

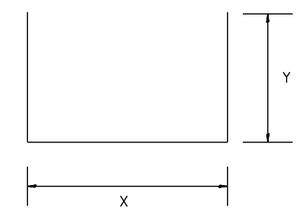

#4 u bars

8 REQUIRED EACH COLLAR

CONCRETE COLLAR SCHEDULE

STATION	OFFSET	SKEW	EXISTING BOX CULVERT (WxH)	PROPOSED CULVERT D IN	PROPOSED CULVERT O.D. IN	PROPOSED CULVERT t IN	COLLAR A	COLLAR B	REINFORCEMENT BARS h BAR NO	h BAR SIZE	h BAR LENGTH	U BAR NO	U BAR SIZE	U BAR X	U BAR Y	U BAR LAP	U BAR LENGTH	POUNDS	CONC COLLAR CLASS SI CU YD
US ROUTE 34																			
809+96.50	7.97' RT	0	2'x2'	36	44	4	5'-0"	5'-0"	20	#4	1'-3"	8	#4	4'4"	2'-10"	1'-4"	10'-0"	70.1	1.0
821+91.60	85.00' RT	0	2'x2'	30	37	3.5	4'-5"	4'-5"	16	#4	1'-3"	8	#4	3'-9"	2'-7"	1'-4"	8'-11"	61.0	0.8
			TOTAL															**131.1**	**1.8**
			USE															**140**	**1.8**

GENERAL NOTES

1. The collar shall be constructed entirely of class SI concrete and in accordance with the applicable portions of section 503 of the Standard Specifications. Reinforcement bars shall conform to section 508.
2. This work will be paid for by the cubic yard for CONCRETE COLLAR, and by the pound for REINFORCEMENT BARS.
3. Class SI quantity is only an estimate. Revise based on Thickness of existing box wall thickness.
4. A portion of the reinforced concrete box culvert barrel shall be removed to accommodate the concrete collar. This work shall be included in the cost of CONCRETE HEADWALL REMOVAL or CULVERT REMOVAL.