Notes:
Pour steps monolithically with cap.

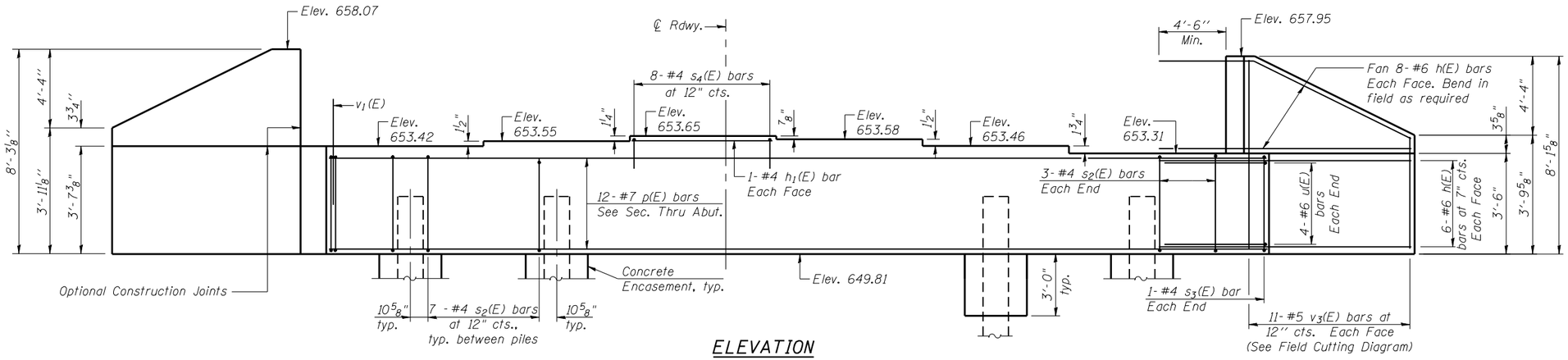

ELEVATION

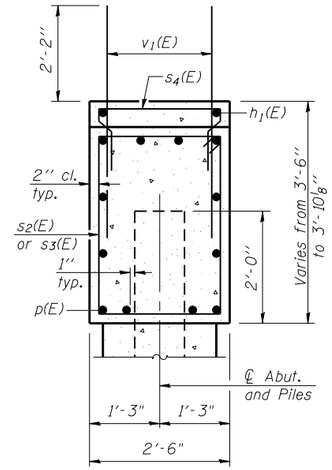

SEC. THRU ABUT.

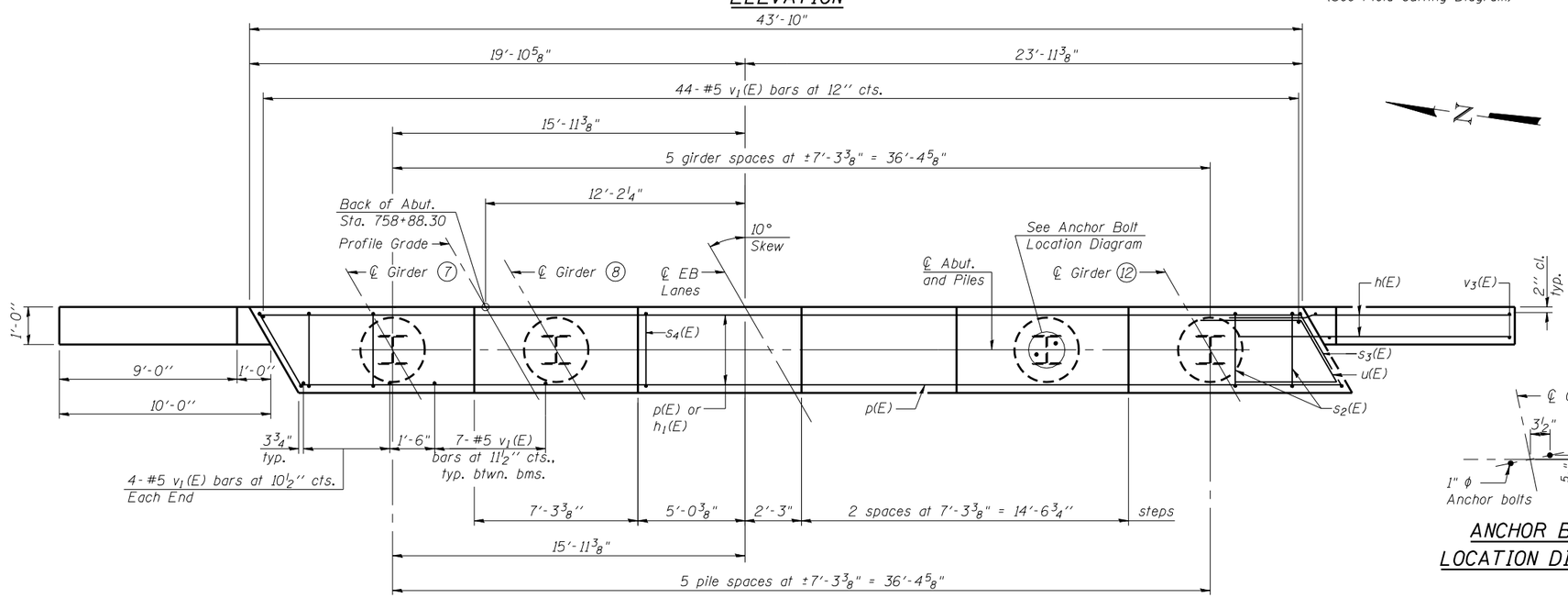

PLAN

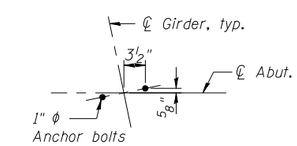

ANCHOR BOLT LOCATION DIAGRAM

BILL OF MATERIAL

Bar	No.	Size	Length	Shape
h(E)	56	#6	14'-4"	
h1(E)	2	#4	7'-0"	
p(E)	12	#7	43'-6"	
s2(E)	41	#4	11'-5"	
s3(E)	2	#4	11'-6"	
s4(E)	8	#4	6'-2"	
u(E)	8	#6	11'-0"	
v1(E)	87	#5	4'-4"	
v3(E)	22	#5	11'-4"	
Structure Excavation			Cu. Yd.	107
Concrete Structures			Cu. Yd.	19.6
Reinforcement Bars, Epoxy Coated			Pound	3430
Furnishing Steel Piles HP 14x89			Foot	270
Driving Piles			Foot	270
Test Pile HP 14x89			Each	1
Concrete Encasement			Cu. Yd.	3.3
Pile Shoes			Each	6

For details of piles and Concrete Encasement, see sheet 38 of 45.

PILE DATA

Type: HP 14x89 with pile shoes
Nominal Required Bearing: 705k
Factored Resistance Available: 321k
Est. Length: 54'
No. Production Piles: 5
No. Test Piles: 1

Note:
Piles shall be driven thru 24" ϕ precored holes extending to elevation 625.5 according to Article 512.09c of the Standard Specifications. Cost included in driving piles.

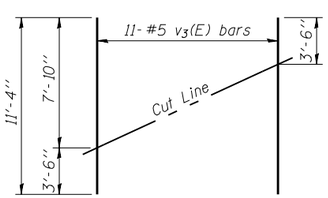

FIELD CUTTING DIAGRAM

Order v3(E) full length. Cut as shown and use remainder of bars in opposite face.

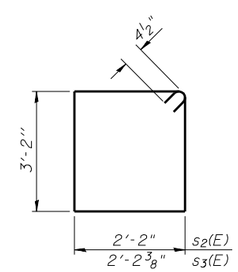

BARS s2(E) & s3(E)

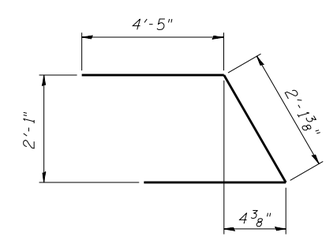

BAR u(E)

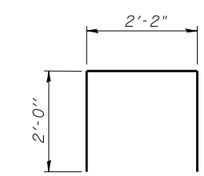

BARS s4(E)

AI-L 7-1-10

FILE NAME = ...\036062-0063-78134-033-E_abut_EB.dgn
CB PROJECT NO 040865

Coombe-Bloxdorf P.C.
-CIVIL ENGINEERS-
-STRUCTURAL ENGINEERS-
-LAND SURVEYORS-
Design Firm License No. 184-002703

USER NAME = _MML_	DESIGNED - CME	REVISED -	
	CHECKED - MCB	REVISED -	
PLOT SCALE = 0:2 '1' / IN.	DRAWN - MML	REVISED -	
PLOT DATE = 10/16/2012	CHECKED - MCB	REVISED -	

STATE OF ILLINOIS
DEPARTMENT OF TRANSPORTATION

EAST ABUTMENT
STRUCTURE NO. 036-0062 (E.B.)
SHEET NO. 33 OF 45 SHEETS

F.A.P. RTE.	SECTION	COUNTY	TOTAL SHEETS	SHEET NO.
313	7-2, 6-1	HENDERSON	976	486
		CONTRACT NO. 68409		
		ILLINOIS FED. AID PROJECT		