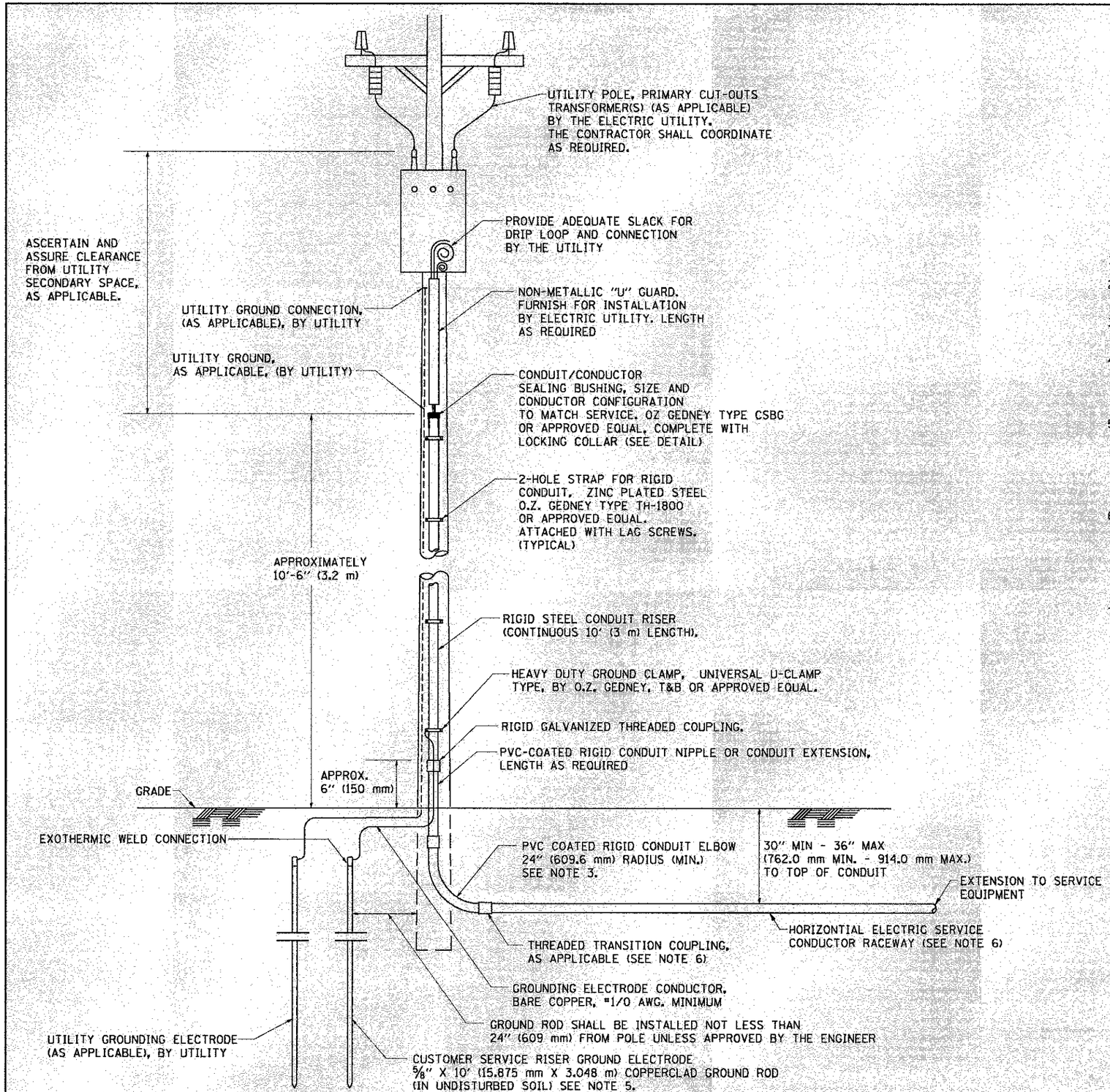

APPLICATION

THIS DETAIL APPLIES FOR LOW VOLTAGE ELECTRIC SERVICE (660 V OR LESS) FROM AN OVERHEAD UTILITY SUPPLY TO SEPERATLY-MOUNTED SERVICE EQUIPMENT.

NOTES

1. SERVICE VOLTAGE SHALL BE AS INDICATED ELSEWHERE IN THE DRAWINGS.
2. UNLESS OTHERWISE INDICATED, ITEMS AND WORK SHALL BE INCLUDED AND PAID AS PART OF THE ELECTRIC UTILITY SERVICE INSTALLATION PAY ITEM.
3. CONDUIT AND CONNECTOR DIAMETER SHALL MATCH THE DIAMETER OF THE SERVICE CONDUCTOR RACEWAY AS INDICATED ON THE PLANS.
4. PVC COATED RACEWAYS AND ACCESSORIES SHALL BE CAREFULLY INSTALLED WITH MFR RECOMMENDED TOOLS AND PROCEDURES TO AVOID DAMAGE. ANY DAMAGE SHALL BE REPAIRED WITH COMPATIBLE PVC TOUCH-UP MATERIAL TO THE SATISFACTION OF THE ENGINEER OR THE DAMAGED MATERIAL SHALL BE REPLACED AT NO ADDITIONAL COST.
5. THE CONTRACTOR SHALL OBTAIN INSPECTION AND APPROVAL BY THE ENGINEER OF SERVICE RISER GROUND ELECTRODE, RISER ELBOW, NIPPLE AND CONNECTION TO SERVICE CONDUCTOR RACEWAY EXTENSION BEFORE BACKFILL AND SHALL ALSO OBTAIN INSPECTION OF SERVICE RISER AND SEALING BUSHING BEFORE UTILITY "U" GUARD INSTALLATION AND SERVICE CONNECTION.
6. THE HORIZONTAL ELECTRIC SERVICE CONDUCTOR RACEWAY SHALL BE AS INDICATED AND SHALL BE MEASURED SEPARATELY FOR PAYMENT. WHEN THE RACEWAY IS PVC-COATED RIGID GALVANIZED STEEL, THE COUPLING SHALL BE THE SAME. WHEN THE RACEWAY IS PVC CONDUIT (IN CONCRETE), THE COUPLING SHALL BE A METALIC TO NON METALIC ADAPTER. WHEN THE RACEWAY IS ENCASED IN CONCRETE, THE CONCRETE SHALL EXTEND TO COVER THE COUPLING.
7. PLANS AND DETAILS INDICATE THE GENERAL NATURE AND REQUIREMENTS. THEY DO NOT SHOW EVERY ACCESSORY AND ATTACHMENT, AND THEY DO NOT RELIEVE THE CONTRACTOR OF THE REQUIREMENTS OF THE SPECIFICATIONS AND SPECIAL PROVISIONS TO ASCERTAIN UTILITY REQUIREMENTS AND TO COORDINATE ACCORDINGLY, FURNISHING ALL ITEMS AND WORK NOT PROVIDED BY THE UTILITY, BUT NECESSARY FOR A COMPLETE SERVICE INSTALLATION IS REQUIRED AND SHALL BE INCLUDED IN THE ELECTRIC UTILITY SERVICE INSTALLATION PAY ITEM.

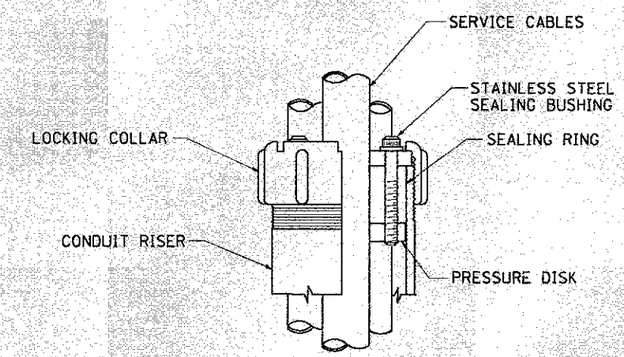

SEALING BUSHING DETAIL

FILE NAME = W:\diststd\22x34\be220.dgn	USER NAME = gegliancobt	DESIGNED -	REVISED - 03-03-06	STATE OF ILLINOIS DEPARTMENT OF TRANSPORTATION	ELECTRIC SERVICE INSTALLATION AERIAL, REMOTE DISCONNECT	FAU RTE	SECTION	COUNTY	TOTAL SHEETS	SHEET NO.
		DRAWN -	REVISED -			1295	09-00154-00-PV	COOK	119	96
	PLOT SCALE = 50.0000 ' / IN.	CHECKED - MEA	REVISED -			BE-220		CONTRACT #: 63746		
FILE NAME = 4185.800-DTI.dwg	PLOT DATE = 1/4/2006	DATE -	REVISED -		SCALE: NONE / SHEET NO. 1 OF 1 SHEETS / STA. / TO STA.	ILLINOIS FED. AID PROJECT				