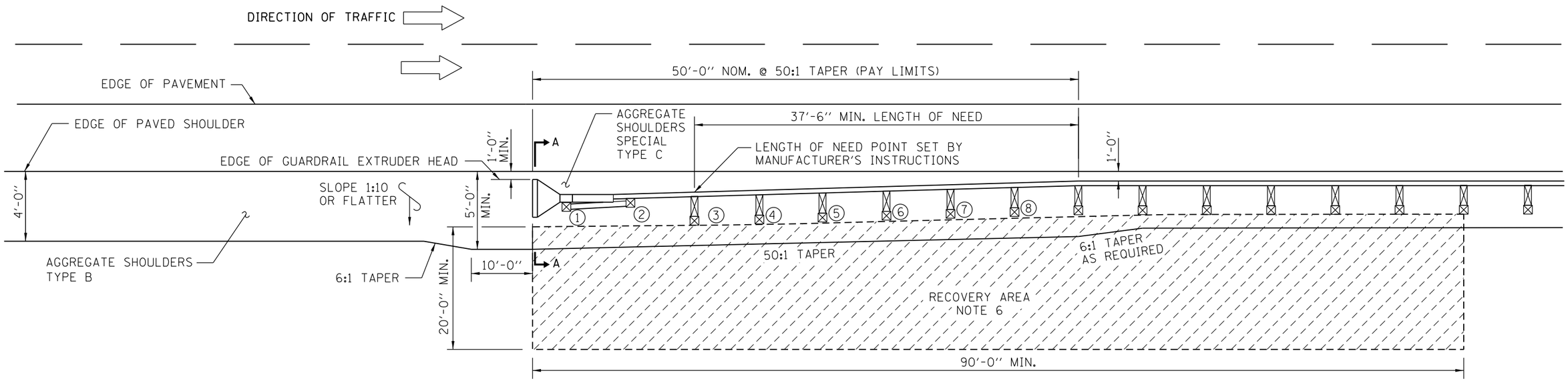

SHOULDER WIDENING TRANSITION-WITHOUT GUTTER FOR TRAFFIC BARRIER TERMINAL TYPE T1 (SPECIAL)

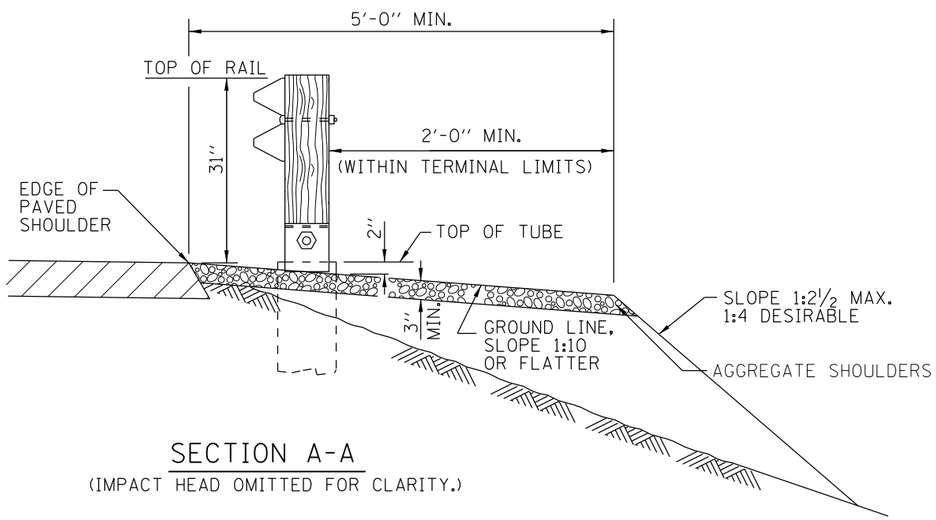

SECTION A-A

(IMPACT HEAD OMITTED FOR CLARITY.)

NOTE FOR INSTALLATION ON TANGENT ROADWAY:

TRAFFIC BARRIER TERMINAL SHALL BE INSTALLED AT A 50:1 TAPER MEASURED FROM EDGE OF TRAVELED WAY.

NOTE FOR INSTALLATION ON CURVED ROADWAY:

THE EDGE OF THE TERMINAL EXTRUDER HEAD SHALL BE OFFSET A DISTANCE FROM A POINT ON THE BACK OF THE CURVED EDGE OF PAVED SHOULDER AS SHOWN IN TABLE 1.

GENERAL NOTES:

1. ALL SLOPE RATIOS ARE EXPRESSED AS UNITS OF VERTICAL DISPLACEMENT TO UNITS OF HORIZONTAL DISPLACEMENT (V:H).
2. THE TYPE T1 (SPECIAL) TERMINAL IS THE UPSTREAM END SECTION OF A GALVANIZED STEEL PLATE BEAM GUARDRAIL BARRIER SYSTEM.
3. REFERENCE STANDARD B28 FOR GUTTER TRANSITION AT TRAFFIC BARRIER TERMINAL TYPE T1 (SPECIAL).
4. UNDER NO CIRCUMSTANCES SHALL AN EXISTING TERMIAL, THAT WAS DESIGNED USING A PREVIOUS STANDARD, BE ATTACHED TO OR MODIFIED IN ANYWAY FROM ITS ORIGINAL DESIGN. IF ANY MODIFICATION IS REQUIRED AND A PROPER BARRIER WARRANT HAS BEEN COMPLETED, THE ENTIRE BARRIER INSTALLATION SHALL BE COMPLETELY REMOVED AND REPLACED WITH A NEW SYSTEM THAT CONFORMS TO THE CURRENT STANDARD.
5. TRAFFIC BARRIER TERMINAL SHALL BE IN ACCORDANCE WITH THE MANUFACTURER'S DETAILS AND SPECIFICATIONS.
6. NO ROADSIDE OBSTRUCTION OF ANY TYPE-FIXED OR BREAKAWAY, EITHER TEMPORARY OR PERMANENT SHALL BE ALLOWED WITHIN THIS RECOVERY AREA.
7. NO CURVED W-BEAM SECTIONS ARE PERMITTED WITHIN THE TERMINAL PAY LIMITS. THE TRAFFIC BARRIER TERMINAL TYPE T1 (SPECIAL) SHALL BE LAID OUT IN A STRAIGHT LINE.
8. TERMINAL POSTS SHALL NOT BE INSTALLED IN CONCRETE OR HMA. WHEN NECESSARY USE LEAVE-OUT DETAIL SHOWN ON STANDARD C1.
9. THE TERMINAL SYSTEM HAS BEEN PERFORMANCE-TESTED FOR CRASHWORTHINESS UNDER PROCEDURCES DEFINED IN THE NATIONAL COOPERATIVE HIGHWAY RESEARCH REPORT (NCHRP) REPORT 350. NO MODIFICATION TO THIS STANDARD DRAWING SHALL BE PERMITTED.

SHEET 1 OF 3

CONTRACT 60I31 SHEET 907 OF 963

Illinois Tollway
Open Roads for a Faster Future

	REVISIONS
3-1-2010	ADDED OBSTRUCTION FREE ZONES. REVISED NOTES.
	ADDED NEW SHEET, SHOULDER WIDENING WITH GUTTER.
1-1-2011	REVISED NOTES, ADDED CURVED ROADWAY TERMINAL PLACEMENT.
2-7-2012	REVISED SLOPE NOTE.

SHOULDER WIDENING FOR TRAFFIC BARRIER TERMINAL TYPE T1 (SPECIAL)

STANDARD C6-03

APPROVED Paul Kovacs CHIEF ENGINEER DATE 7-1-2009