Note:
All steel rail elements shall be galvanized according to Article 509.05 of the Standard Specifications.

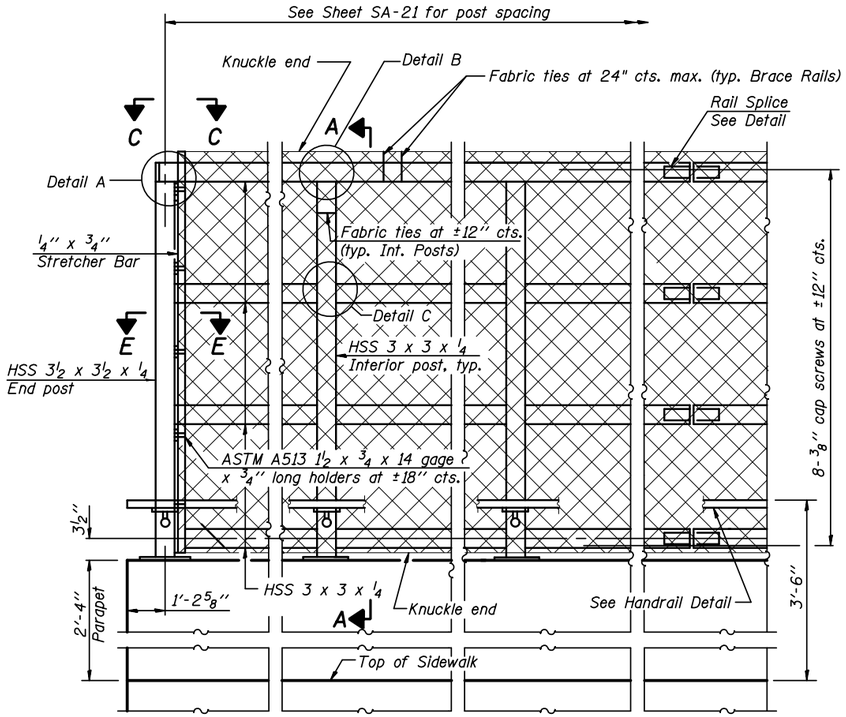

ELEVATION
(Inside Face)

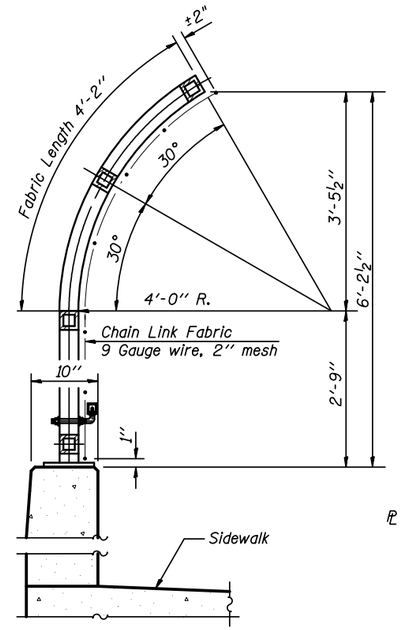

SECTION A-A

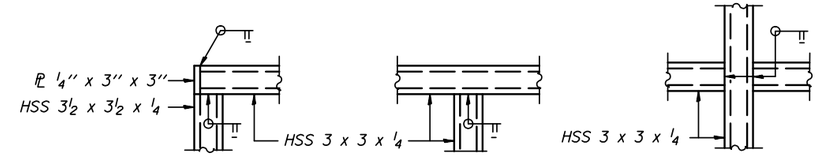

DETAIL A **DETAIL B** **DETAIL C**

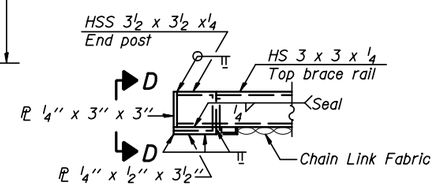

VIEW C-C

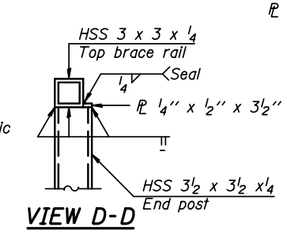

VIEW D-D

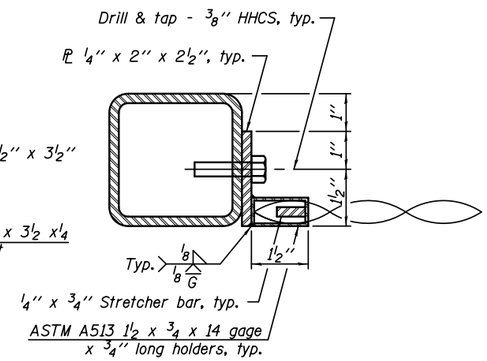

SECTION E-E

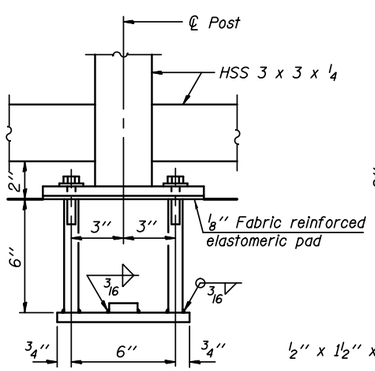

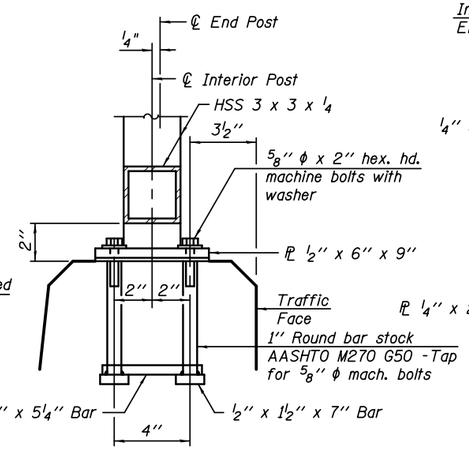

ANCHOR BOLT DETAILS

In lieu of the cast-in-place anchor device shown, the Contractor has the option of drilling and setting 5/8'' ϕ anchor rods according to Article 509.06 of the Standard Specifications. Embedment shall be according to the manufacturer's specifications.

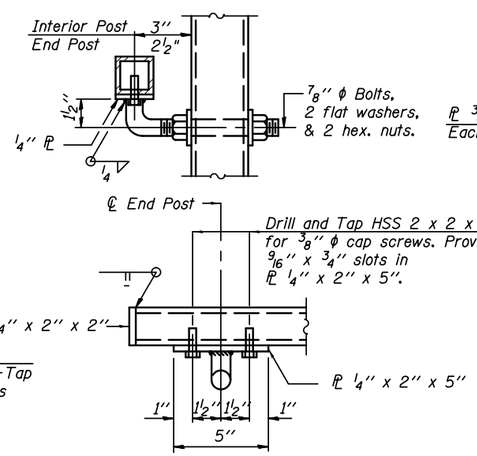

HANDRAIL DETAIL

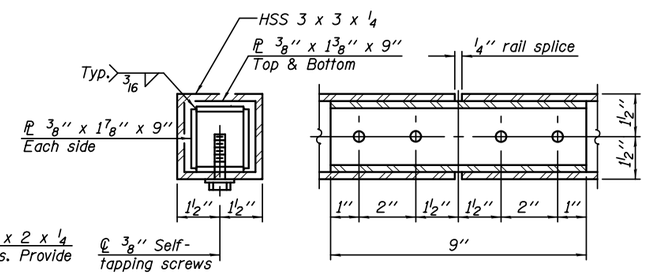

RAIL SPLICE

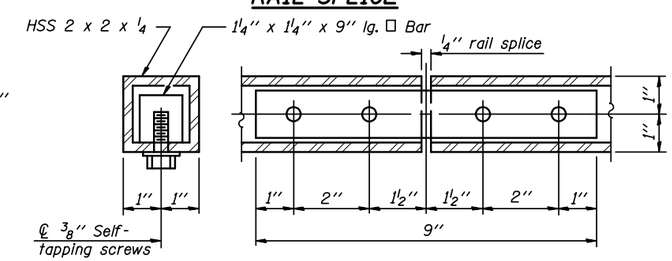

HANDRAIL SPLICE

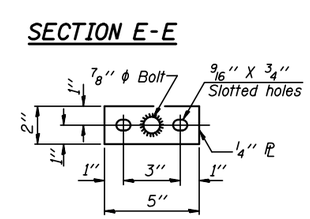

BASE PL
(Handrail)

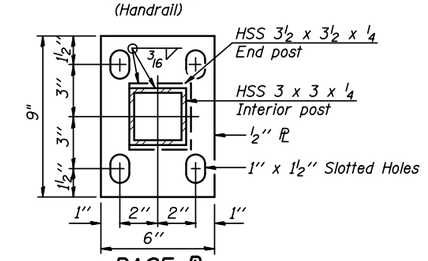

BASE PL

BILL OF MATERIAL

Item	Unit	Quantity
Bridge Fence Railing	Foot	251.0

KNIGHT Engineers & Architects		DESIGNED - WPM	REVISED
		CHECKED - TB	REVISED
	SCALE - NONE	DRAWN - TB	REVISED
	DATE - 10/15/2012	CHECKED - WPM	REVISED

STATE OF ILLINOIS
DEPARTMENT OF TRANSPORTATION

BRIDGE FENCE RAILING, PARAPET MOUNTED
S.N. 022-2029 (SB) TOLLWAY B.N. 826
S.N. 022-2030 (NB) TOLLWAY B.N. 825
SHEET NO. SA-38 OF 63 SHEETS

F.A.P. RTE.	SECTION	COUNTY	TOTAL SHEETS	SHEET NO.
338	(112 & 113) WRS-5	DUPAGE	963	622
		CONTRACT NO. 60I31		
		ILLINOIS FED. AID PROJECT		