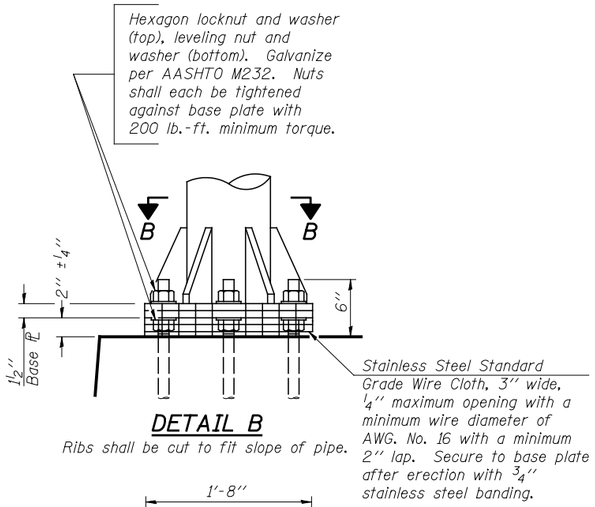

DETAIL B

Ribs shall be cut to fit slope of pipe.

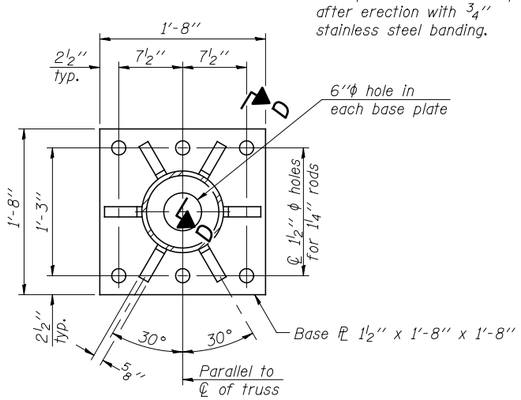

SECTION B-B

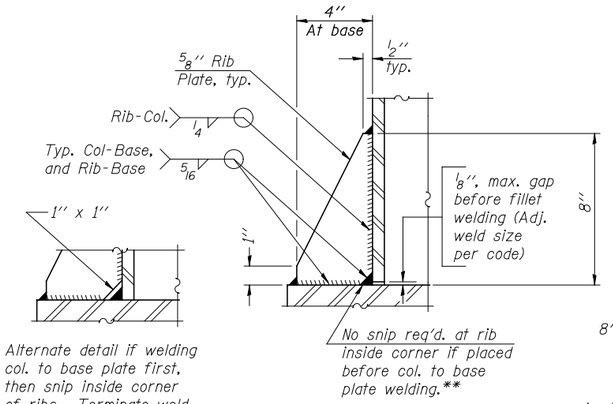

SECTION D-D

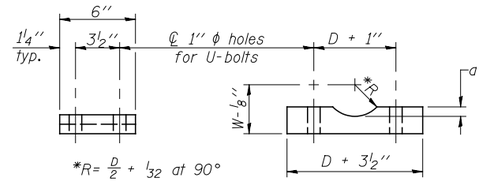

*R= D/2 + 1/32 at 90°

D = Outside Diameter of Chord.
For W, see Base Sheet OS-A-6.

SADDLE SHIM DETAIL

ASTM B26 Alloy 356-F
or
ASTM B209 Alloy 6061-T651
(4 required per sign truss)

Truss Chord Nominal Dia.	a
5''	3/4''
5 1/2''	13/16''
6''	7/8''
6 1/2''	15/16''
7''	1''

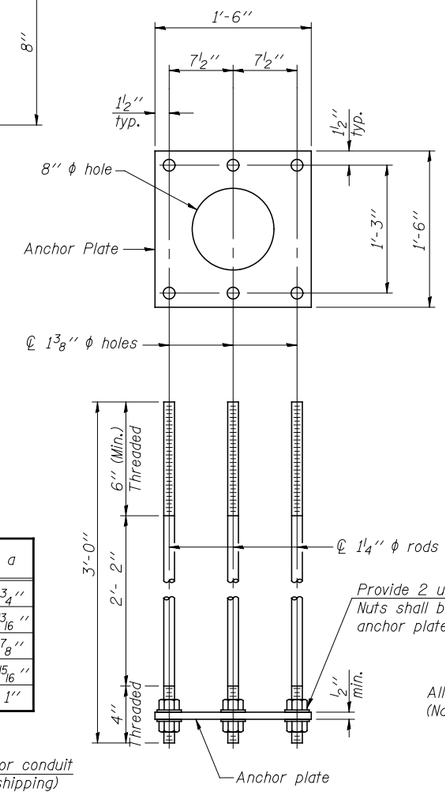

ANCHOR ROD DETAIL

Spread Footing Foundation

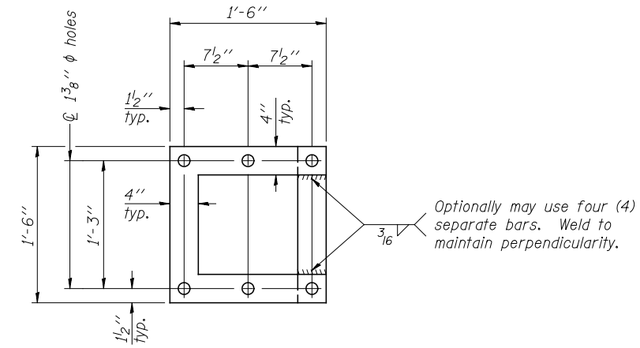

POSITIONING PLATE(S)

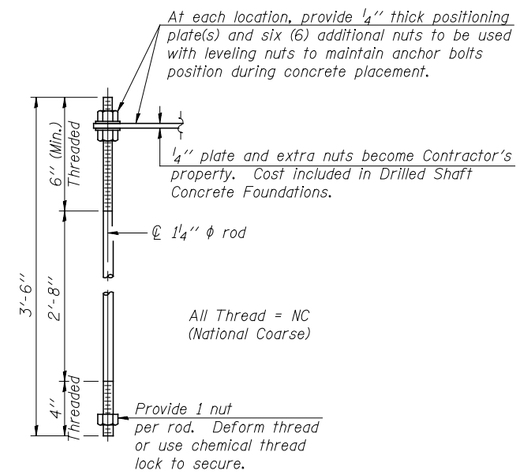

ANCHOR ROD DETAIL

Drilled Shaft Foundation

Anchor rods shall conform to ASTM F1554 Grade 105. Galvanize upper 12'' minimum per AASHTO M232. No welding shall be permitted on rods.

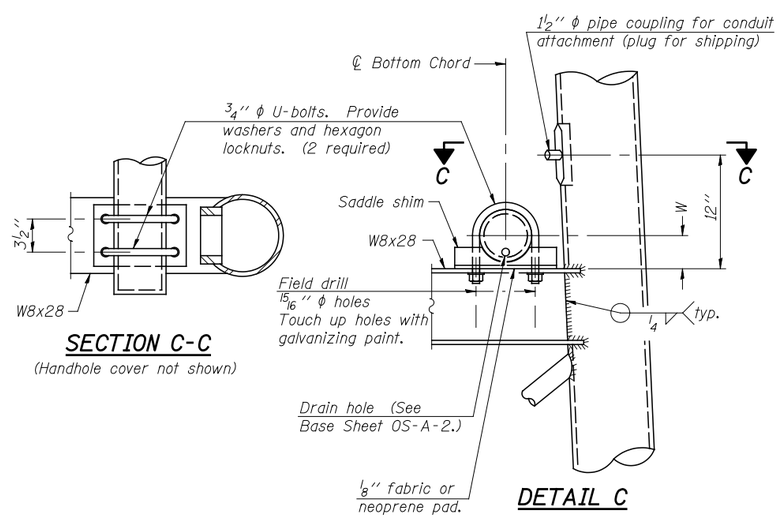

SECTION C-C

(Handhole cover not shown)

DETAIL C

10'' ϕ PIPE SUPPORT FRAME DETAILS

OS-A-6A 6-1-12

FILE NAME = $FILEL$	USER NAME = $USER$	DESIGNED PJO	REVISED -	STATE OF ILLINOIS DEPARTMENT OF TRANSPORTATION	OVERHEAD SIGN STRUCTURES SUPPORT FRAME DETAILS – ALUMINUM TRUSS	F.A.P. RTE.	SECTION	COUNTY	TOTAL SHEETS / SHEET NO.
		DRAWN KES	REVISED -			338	(112 & 113) WRS-5	DUPAGE	963 / 409
	PLOT SCALE = $SCALE$	CHECKED JCM	REVISED -					CONTRACT NO. 60I31	
	PLOT DATE = $DATE$	DATE 10/15/2012	REVISED -		SCALE: SHEET NO. 9 OF 15 SHEETS STA. TO STA.		ILLINOIS FED. AID PROJECT		