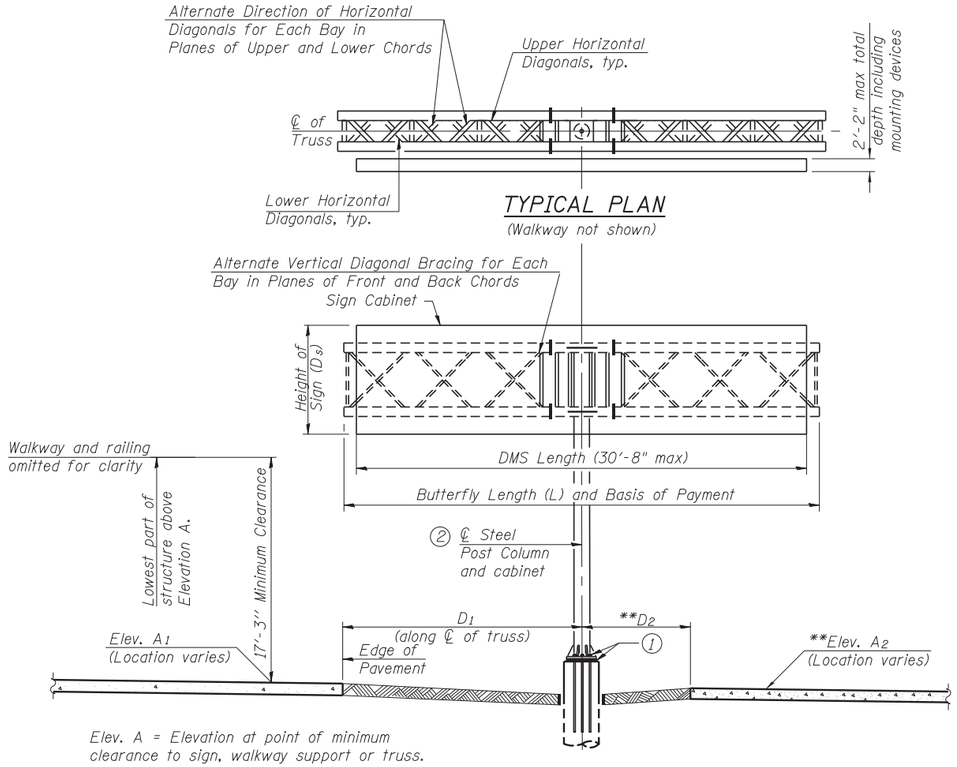


## TYPICAL ELEVATION

Looking in Direction of Traffic

** Elevation $A_2$ and dimension $D_2$ not used when butterfly structure is mounted on right side of the shoulder.

Sign support structures may be subject to damaging vibrations and oscillations when signs are not in place during erection or maintenance of the structure. To avoid these vibrations and oscillations, consideration should be given to attaching temporary blank sign panels to the structure.

| Structure Number | Station | Total Butterfly Length (L) | Elev. $A_1$ | Elev. $A_2$ | Dim. $D_1$ | Dim. $D_2$ | $D_s$ max. | Total Sign Area |
|---|---|---|---|---|---|---|---|---|
| 1F016U045R004.9 | 58+85 | 32'-0" | 645.28 | --- | 22'-0" | --- | 8'-1" | 248 SF |
| | | | | | | | | |
| | | | | | | | | |
| | | | | | | | | |
| | | | | | | | | |
| | | | | | | | | |
| | | | | | | | | |
| | | | | | | | | |
| | | | | | | | | |
| | | | | | | | | |
| | | | | | | | | |
| | | | | | | | | |

## TOTAL BILL OF MATERIAL

| ITEM | UNIT | TOTAL |
|---|---|---|
| OVERHEAD SIGN STRUCTURE BUTTERFLY TYPE III-F-A | Foot | 32.00 |
| OVERHEAD SIGN STRUCTURE WALKWAY, TYPE A | Foot | 32.00 |
| DRILLED SHAFT CONCRETE FOUNDATIONS | Cu. Yds. | 9.4 |
| | | |
| | | |

| TRUSS TYPE | MAXIMUM TOTAL DMS SIGN CABINET AREA |
|---|---|
| III-F-A | 248 Sq. Ft. |
| | |

Maximum DMS weight = 3000 LB.

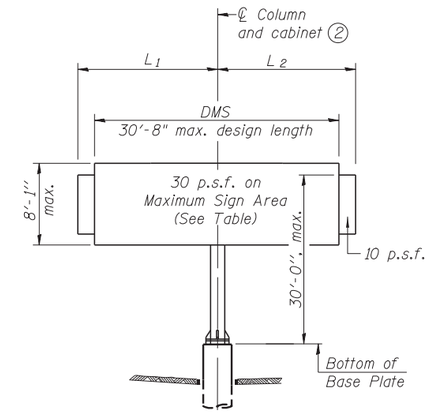


## DESIGN WIND LOADING DIAGRAM

Parameters shown are basis for I.D.O.T. Standards Installations not within dimensional limits shown require special analysis for all components.

Note:
Trusses shall be shipped individually with adequate provision to prevent detrimental motion during transport. This may require ropes between horizontals and diagonals or energy dissipating (elastic) ties to the vehicle. The contractor is responsible for maintaining the configuration and protection of the trusses.

① After adjustments to level truss and insure adequate vertical clearance, all top and bottom leveling nuts shall be tightened against the base plate with a minimum torque of 200 lb.-ft. Stainless steel mesh shall then be placed around the perimeter of the base plate. Secure to base plate with stainless steel banding.

② Centerline cabinet must be located at centerline of column.

* If M270 Gr. 50W (M222) steel is proposed, chemistry for plate to be used shall first be approved by the Engineer as suitable for galvanizing and welding.

## NOTES

DMS cabinet dimensions are the largest values of several vendors. The sign structure dimensions were based on these values and shall not change if smaller DMS dimensions are selected, except for walkway support dimensions shown in Section B-B on Sheet S-8 of 10.

## GENERAL NOTES

DESIGN: AASHTO Standard Specifications for Structural Supports for Highway Signs, Luminaires and Traffic Signals. ("AASHTO Specifications")

CONSTRUCTION: Current (at time of letting) Illinois Department of Transportation Standard Specifications for Road and Bridge Construction, Supplemental Specifications and Special Provisions. ("Standard Specifications")

LOADING: 90 M.P.H. WIND VELOCITY
WIND LOADING: 30 p.s.f. normal to DMS Cabinet Area and truss elements not behind sign Loading Diagram.
WALKWAY LOADING: Dead load plus 500 lbs. concentrated live load.

DESIGN STRESSES
FIELD UNITS
f'c = 3,500 p.s.i.
fy = 60,000 p.s.i. (reinforcement)

WELDING: All welds to be continuous unless otherwise shown. All welding to be done in accordance with current AWS D1.1 and D1.2 Structural Welding Codes (Steel and Aluminum) and the Standard Specifications.

MATERIALS: Aluminum Alloys as shown throughout plans. All Structural Steel Pipe shall be ASTM A53 Grade B or A500 Grade B or C. If A500 pipe is substituted for A53, then the outside diameter shall be as detailed and wall thickness greater than or equal to A53.
All Structural Steel Plates and Shapes shall conform to AASHTO M270 Gr. 36, Gr. 50 or Gr. 50W* (M183, M223 Gr. 50, or M222). Stainless steel for shims, sleeves and handhole covers shall be ASTM A240, Type 302 or 304, or another alloy suitable for exterior exposure and acceptable to the Engineer.
The steel pipe and stiffening ribs at the base plate for the column shall have a minimum longitudinal Charpy V-Notch (CVN) energy of 15 lb.-ft. at 40° F. (Zone 2) before galvanizing.

FASTENERS FOR ALUMINUM TRUSSES: All bolts noted as "high strength" must satisfy the requirements of AASHTO M164 (ASTM A325), or approved alternate, and must have matching lock nuts. Threaded studs for splices (if Members interfere) must satisfy the requirements of ASTM A449, ASTM A193, Grade B7, or approved alternate, and must have matching lock nuts. Bolts and lock nuts not required to be high strength must satisfy the requirements of ASTM A307. All bolts and lock nuts must be hot dip galvanized per AASHTO M232. The lock nuts must have nylon or steel inserts. A stainless steel flat washer conforming to ASTM A240 Type 302 or 304, is required under both head and nut or under both nuts where threaded studs are used. High strength bolt installation shall conform to Article 505.04 (f) (2)d of the IDOT Standard Specifications for Road and Bridge Construction. Rotational capacity ("ROCAP") testing of bolts will not be required.

U-BOLTS AND EYEBOLTS: U-Bolts and Eyebolts must be produced from ASTM A276 Type 304, 304L, 316 or 316L, Condition A, cold finished stainless steel, or an equivalent material acceptable to the Engineer. All nuts for U-Bolts and Eyebolts must be lock nuts equivalent to ASTM A307 with nylon or steel inserts and hot dip galvanized per AASHTO M232. A stainless steel flat washer conforming to ASTM A240, Type 302 or 304, is required under each U-Bolt and Eyebolt lock nut.

GALVANIZING: All Steel Grating, Plates, Shapes and Pipe shall be Hot Dip Galvanized after fabrication in accordance with AASHTO M111. Painting is not permitted.

ANCHOR RODS: Shall conform to ASTM F1554 Gr. 105.

CONCRETE SURFACES: All concrete surfaces above an elevation 6" below the lowest final ground line at each foundation shall be cleaned and coated with Bridge Seat Sealer in accordance with the Standard Specifications.

REINFORCEMENT BARS: Reinforcement Bars designated (E) shall be epoxy coated in accordance with the Standard Specifications.