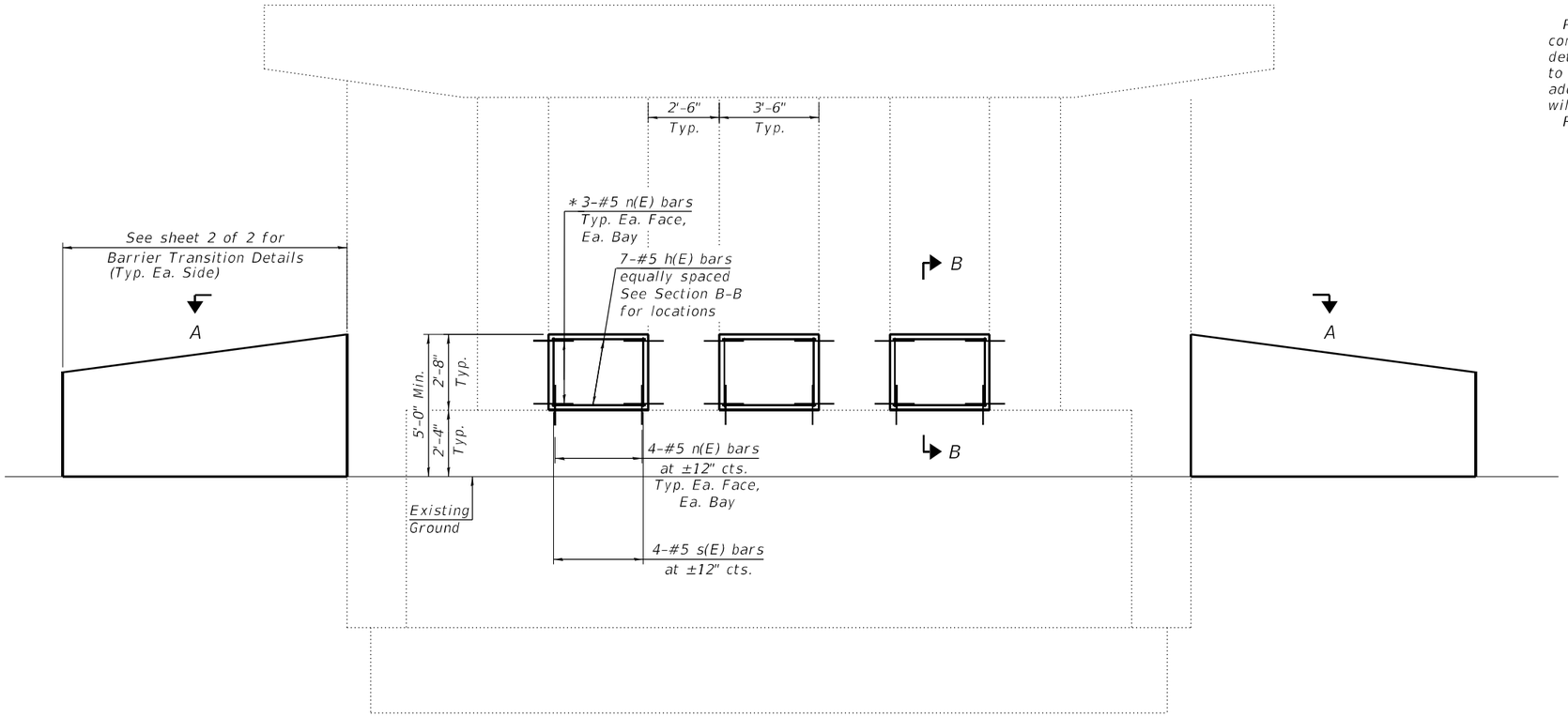

ELEVATION

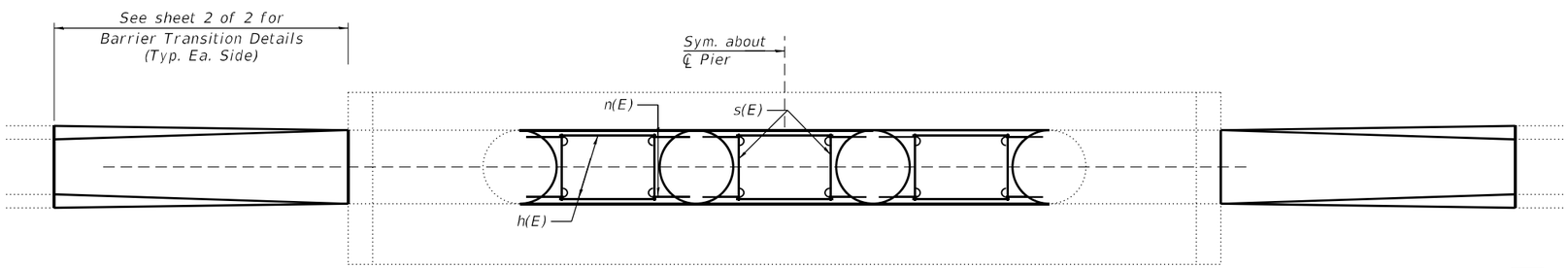

SECTION A-A

GENERAL NOTES

Plan dimensions and details relative to existing plans are subject to nominal construction variations. The Contractor shall field verify existing dimensions and details affecting new construction and make necessary approved adjustments prior to construction or ordering of materials. Such variations shall not be cause for additional compensation for a change in scope of work, however, the Contractor will be paid for the quantity actually furnished at the unit price bid for the work.

Reinforcement bars designated (E) shall be epoxy coated.

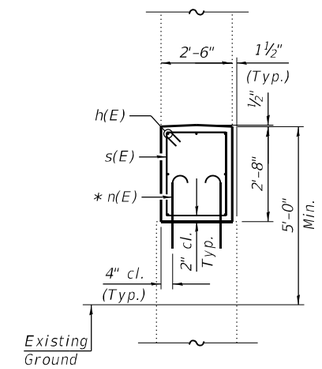

SECTION B-B

* Epoxy grout n(E) bars in 9" min. holes according to Article 584 of the Standard Specifications.

*** TOTAL BILL OF MATERIAL

ITEM	UNIT	QUANTITY
Concrete Structures	Cu. Yd.	19.4
Protective Coat	Sq. Yd.	30
Reinforcement Bars, Epoxy Coated	Pound	760

*** For information only. (To be paid for as Concrete Barrier, Double Face, 44-Inch Heigth. See Special Provisions)

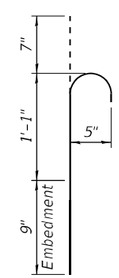

BAR n(E)

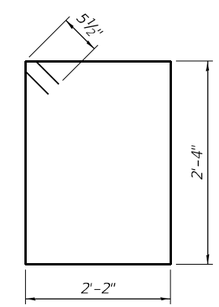

BAR s(E)

BILL OF MATERIAL (CRASHWALL EXTENSIONS)

Bar	No.	Size	Length	Shape
h(E)	21	#5	3'-2"	
n(E)	60	#5	2'-5"	
s(E)	12	#5	9'-11"	
Concrete Structures			Cu. Yd.	2.6
** Protective Coat			Sq. Yd.	6
Reinforcement Bars, Epoxy Coated			Pound	350

** Apply to new concrete only.

MODEL: Default
FILE NAME: P:\Transportation\4858-IDOT 198-34 Dist. 9 VAA_WO29\Structures\CAD - SS10\041013-78884-001_Barrier Transition-Sht1.dgn

CIVIL DESIGN, INC.
WBE / DBE
EFFINGHAM, IL
LICENSE #184.003222

USER NAME = jSchreckenberg	DESIGNED - MJH	REVISED -	
	DRAWN - MJH	REVISED -	
PLOT SCALE = 10:0.0000 ':" / in.	CHECKED - JGS	REVISED -	
PLOT DATE = 7/12/2024	DATE - 07/11/2024	REVISED -	

STATE OF ILLINOIS
DEPARTMENT OF TRANSPORTATION

PIER CRASHWALL EXTENSION
STRUCTURE NO. 041-0113

SCALE: | SHEET 3 OF 3 SHEETS | STA. | TO STA.

F.A.P. RTE.	SECTION	COUNTY	TOTAL SHEETS	SHEET NO.
IL-57	(28-2)B-2; (28-1)B-2	FRANKLIN	598	301
		CONTRACT NO. 78884		
		ILLINOIS	FED. AID PROJECT	

Bench Mark: BM 8 – Sawed square on northwest wingwall of northbound structure, SN 028-0013, Sta. 101+80.9, 27.8' LT, Elev. 417.62

Existing Structure: SN 028-0013 (N.B.) and 028-0014 (S.B.) were originally built in 1962 as F.A.I. 57, Section 28-1B-F. The deck, bearings, and expansion joints were replaced in 1993 for SN 028-0013 (N.B.) as Section (28-1B)D and 1994 for SN 028-0014 (S.B.) as Section (28-1B)D-1. The back to back abutment length is 163'-0" and the out to out deck width is 43'-2". Each structure consists of a three span steel 33WF118 superstructure (composite in positive bending areas) supported by concrete stub abutments founded on steel H-piles and solid wall piers on steel H-pile supported footings.

Traffic Control: Two traffic lanes will be maintained in each direction by utilizing staged construction.

Salvage: None.

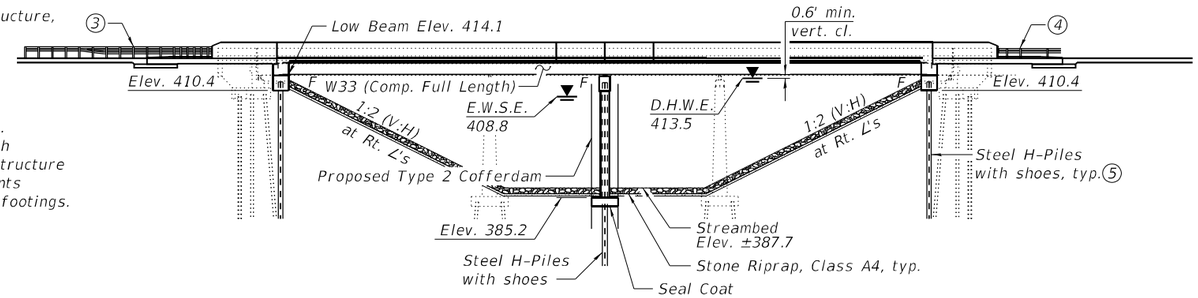

ELEVATION

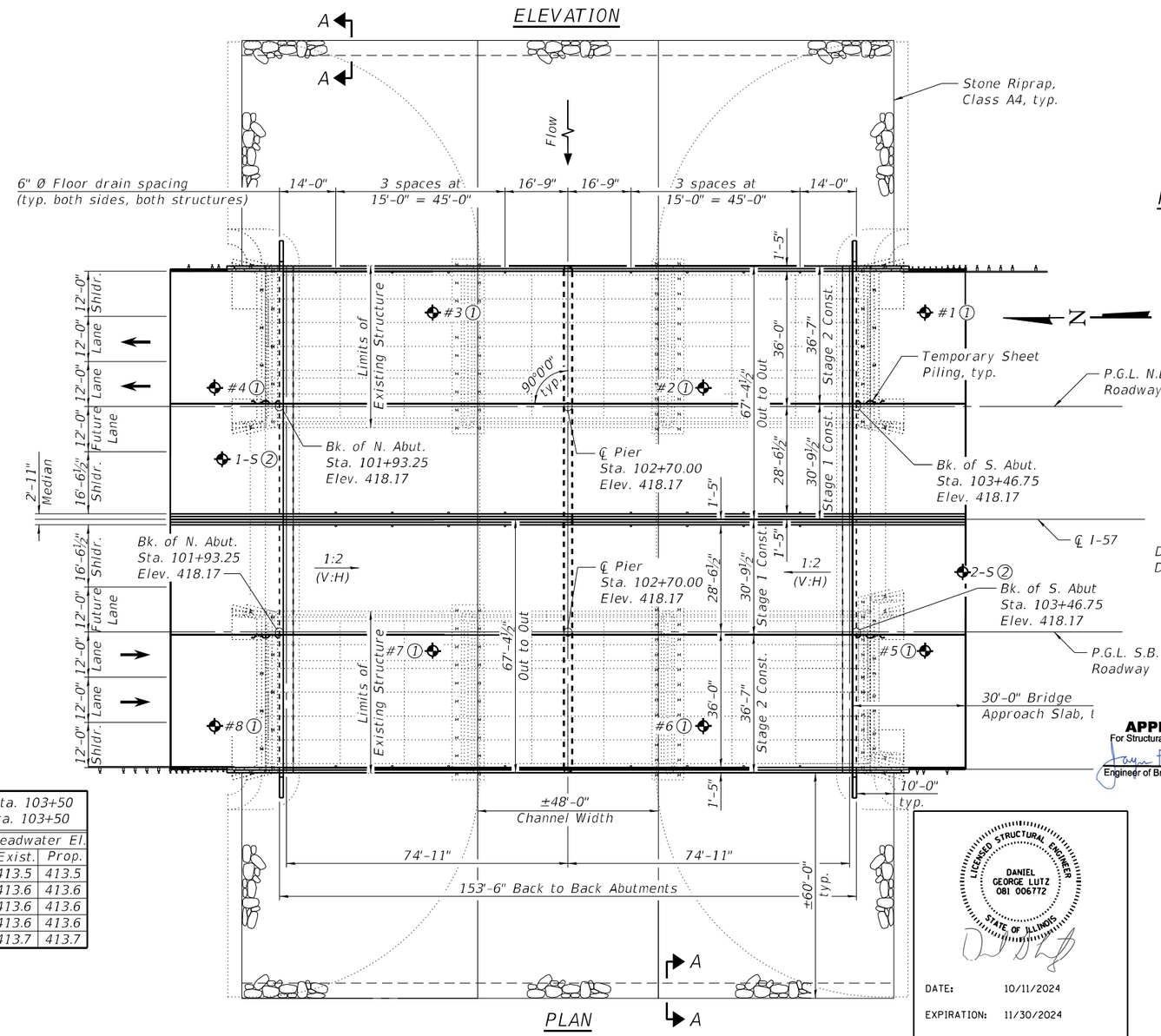

PLAN

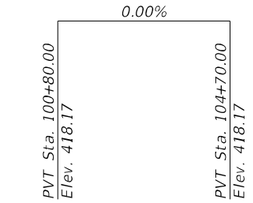

PROFILE GRADE – F.A.I. RTE. 57 (N.B.)
(Along P.G.L., shows final grade after grinding)

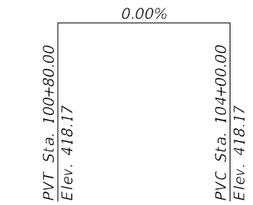

PROFILE GRADE – F.A.I. RTE. 57 (S.B.)
(Along P.G.L., shows final grade after grinding)

STATION 102+70
BUILT 20__ BY
STATE OF ILLINOIS
F.A.I. RT. 57
SEC. (28-1)B-2
LOADING HL-93
STR. NO. 028-0093

NAME PLATE
See Std. 515001

STATION 102+70
BUILT 20__ BY
STATE OF ILLINOIS
F.A.I. RT. 57
SEC. (28-1)B-2
LOADING HL-93
STR. NO. 028-0094

NAME PLATE
See Std. 515001

Notes:
1. 1961 Boring
2. 2019 Boring
3. Traffic Barrier Terminal
   Type 5, Std. 631026 (N.B. Structure)
   Type 6, Std. 631031 (S.B. Structure)
4. Traffic Barrier Terminal
   Type 5, Std. 631026 (S.B. Structure)
   Type 6, Std. 631031 (N.B. Structure)
5. Space piles to miss existing battered piles.
6. Up to ¼ inch may be ground off the bridge deck and the bridge approach slabs.
7. Elevations shown in plan represent elevations after grinding.

DESIGN SCOUR ELEVATION TABLE

Event / Limit State	Design Scour Elevations (ft.)			
	N. Abut.	Pier	S. Abut.	Item 113
Q100	410.4	383.7	410.4	8
Q200	410.4	383.7	410.4	
Design	410.4	383.7	410.4	
Check	410.4	383.7	410.4	

WATERWAY INFORMATION

Drainage Area = 41.9 sq. mi.
Exist. Overtopping Elev. = 417.5 at Sta. 103+50
Prop. Overtopping Elev. = 417.8 at Sta. 103+50

Flood	Freq. Yr.	Q C.F.S.	Opening Ft² Exist.	Opening Ft² Prop.	Nat. H.W.E.	Head – Ft. Exist.	Head – Ft. Prop.	Headwater El. Exist.	Headwater El. Prop.
Ten-Year	10	3,510	2,375	2,440	413.5	0.0	0.0	413.5	413.5
Design	50	5,400	2,375	2,440	413.5	0.1	0.1	413.6	413.6
	100	6,210	2,375	2,440	413.5	0.1	0.1	413.6	413.6
	200	7,100	2,375	2,440	413.5	0.1	0.1	413.6	413.6
Max. Calc.	500	8,290	2,375	2,440	413.5	0.2	0.2	413.7	413.7

Existing 10 Year Average Velocity = 1.5 ft/s
Proposed 10 Year Average Velocity = 1.4 ft/s

LOADING HL-93
Allow 50#/sq. ft. for future wearing surface.

DESIGN SPECIFICATIONS
2020 AASHTO LRFD Bridge Design Specifications, 9th Edition

DESIGN STRESSES
FIELD UNITS
f'c = 3,500 psi (Substructure)
f'c = 4,000 psi (Superstructure)
fy = 60,000 psi (Reinforcement)
fy = 50,000 psi (M270 Grade 50)
fy = 36,000 psi (M270 Grade 36)

SEISMIC DATA
Seismic Performance Zone (SPZ) = 3
Design Spectral Acceleration at 1.0 sec. (SD1) = 0.316g
Design Spectral Acceleration at 0.2 sec. (SDS) = 0.742g
Soil Site Class = D

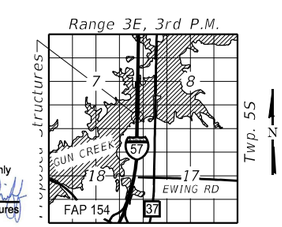

LOCATION SKETCH

APPROVED
For Structural Adequacy Only
Engineer of Bridges & Structures

LICENSED STRUCTURAL ENGINEER
DANIEL GEORGE LUTZ
081 006772
STATE OF ILLINOIS

DATE: 10/11/2024
EXPIRATION: 11/30/2024

GENERAL PLAN & ELEVATION
I-57 OVER GUN CREEK
F.A.I. RTE. 57 – SEC. (28-1)B-2
FRANKLIN COUNTY
STA. 102+70.00
STRUCTURE NO. 028-0093 (N.B.)
STRUCTURE NO. 028-0094 (S.B.)

OATES ASSOCIATES
www.oatesassociates.com
ILLINOIS DESIGN FIRM LICENSE NO.: 184.001115

USER NAME =	DESIGNED - ORG	REVISED -	
	CHECKED - KBC	REVISED -	
PLOT SCALE =	DRAWN - ORG	REVISED -	
PLOT DATE = 12/13/2024	CHECKED - KBC	REVISED -	

STATE OF ILLINOIS
DEPARTMENT OF TRANSPORTATION

GENERAL PLAN SHEET
STRUCTURE NO. 028-0093 (N.B.) & 028-0094 (S.B.)
SHEET 1 OF 39 SHEETS

F.A.I. RTE.	SECTION	COUNTY	TOTAL SHEETS	SHEET NO.
57	(28-1)B-2	FRANKLIN	598	302
		CONTRACT NO. 78884		
		ILLINOIS	FED. AID PROJECT	

FILE NAME: H:\P\222064 - IDOT PTB 203 Item 49 District 9 V:\v\222064.011 - I57 over Gun\Microstation\0280093_0094-78884-001-General Plan & Elevation.dgn

GENERAL NOTES

Fasteners shall be ASTM F 3125 Grade A325 Type 1, hot dip galvanized bolts in metallized areas. Bolts 7/8 in. diameter, holes 15/16 in. diameter, unless otherwise noted. See special provision for "Metalizing of Structural Steel".

Calculated weight of Structural Steel = AASHTO M 270 Grade 50 = 473,150 pounds
AASHTO M 270 Grade 36 = 48,340 pounds

All structural steel shall be metallized. See Special Provision for "Metallizing of Structural Steel."

No field welding is permitted except as specified in the contract documents.

Reinforcement bars designated (E) shall be epoxy coated.

If the Contractor elects to use cantilever forming brackets on the exterior beams or girders, the brackets shall be placed at the same locations as required for the hardwood blocks in Article 503.06(b) of the Standard Specifications. If additional cantilever forming brackets are required, hardwood blocking shall be wedged between the exterior and first interior beam at each of these additional bracket locations.

Slipforming of the parapets is not allowed.

Bearing seat surfaces shall be constructed or adjusted to the designated elevations within a tolerance of 1/8 in. (0.01 ft.). Adjustment shall be made either by grinding the surface or by shimming the bearings.

The Seal coat design thickness is based on the Cofferdam Design Water Elevation (CDWE) shown. Final cofferdam design, details and seal coat thickness shall be submitted to the Engineer for approval. The CDWE is equal to the Estimated Water Surface Elevation (EWSE) plus 3 feet.

Layout of the slope protection system may be varied to suit ground conditions in the field as directed by the Engineer.

The existing structural steel coating contains lead. The Contractor shall take appropriate precautions to address the presence of lead on this project.

TOTAL BILL OF MATERIAL

ITEM	UNIT	SUPER	SUB	TOTAL
Stone Riprap, Class A4	Sq. Yd.	-	4,871	4,871
Filter Fabric	Sq. Yd.	-	4,871	4,871
Removal of Existing Structure No. 3	Each	-	-	1
Removal of Existing Structure No. 4	Each	-	-	1
Protective Shield	Sq. Yd.	-	-	1,402
Structure Excavation	Cu. Yd.	-	156	156
Cofferdam Excavation	Cu. Yd.	-	282	282
Cofferdam (Type 2) (Location - 4)	Each	-	1	1
Cofferdam (Type 2) (Location - 5)	Each	-	1	1
Cofferdam (Type 2) (Location - 6)	Each	-	1	1
Floor Drains	Each	32	-	32
Concrete Structures	Cu. Yd.	-	621.0	621.0
Concrete Superstructure	Cu. Yd.	701.1	-	701.1
Seal Coat Concrete	Cu. Yd.	-	169.3	169.3
Protective Coat	Sq. Yd.	3,402	-	3,402
Concrete Superstructure (Approach Slab)	Cu. Yd.	378.1	-	378.1
Furnishing and Erecting Structural Steel	L Sum	0.63	-	0.63
Stud Shear Connectors	Each	13,824	-	13,824
Reinforcement Bars, Epoxy Coated	Pound	320,980	66,740	387,720
Bar Splicers	Each	1,570	344	1,914
Furnishing Steel Piles HP14X102	Foot	-	4,176	4,176
Driving Piles	Foot	-	4,176	4,176
Test Pile Steel HP14X102	Each	-	6	6
Pile Shoes	Each	-	78	78
Name Plates	Each	2	-	2
Anchor Bolts, 1"	Each	-	96	96
Temporary Sheet Piling	Sq. Ft.	-	248	248
Granular Backfill for Structures	Cu. Yd.	-	343	343
Geocomposite Wall Drain	Sq. Yd.	-	198	198
Pipe Underdrains for Structures 4"	Foot	-	333	333
Diamond Grinding (Bridge Section)	Sq. Yd.	2,845	-	2,845
Bridge Deck Grooving (Longitudinal)	Sq. Yd.	1,692	-	1,692
Bar Terminator	Each	768	1,304	2,072

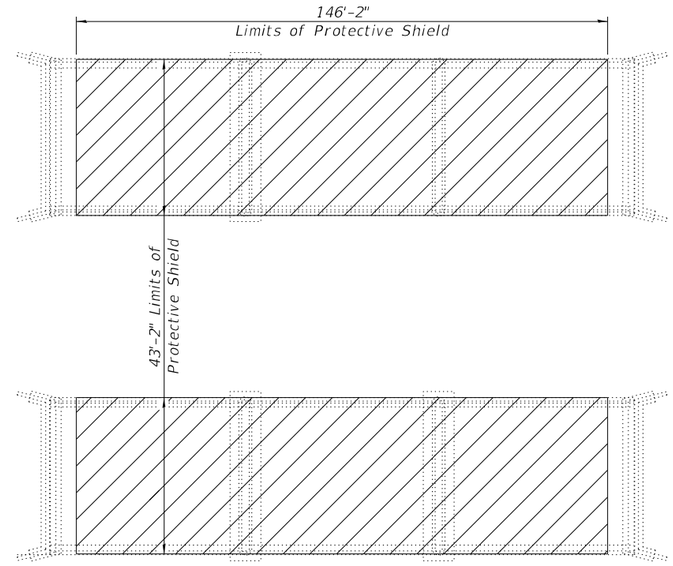

PROTECTIVE SHIELD DETAIL

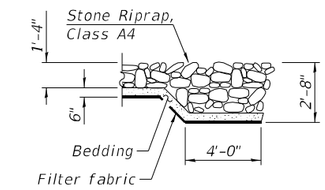

SECTION A-A

N

Protective Shield

INDEX OF SHEETS

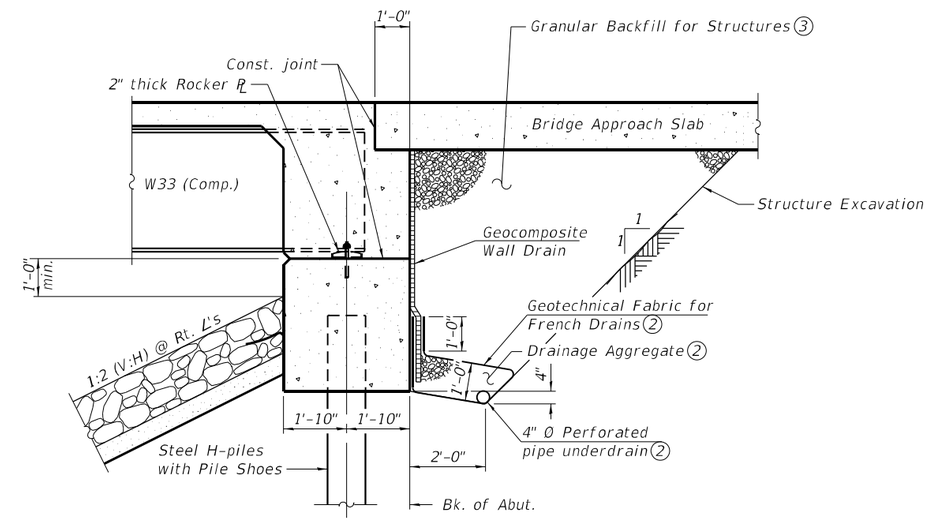

SECTION THRU INTEGRAL ABUTMENT ①

Notes:
① All drainage system components shall extend to 2'-0" from the end of each wingwall except an outlet pipe shall extend until intersecting with the side slopes. The pipes shall drain into concrete headwalls. See Article 601.05 of the Standard Specifications and Highway Standard 601101.
② Included in the cost of Pipe Underdrains for Structures.
③ Granular Backfill for Structures shall follow Article 586 of the Standard Specifications, and the Coarse Aggregate shall be Grade CA 7, CA 11, or CA 14. Granular backfill behind the abutments shall be compacted according to Article 205.06 of the Standard Specifications.

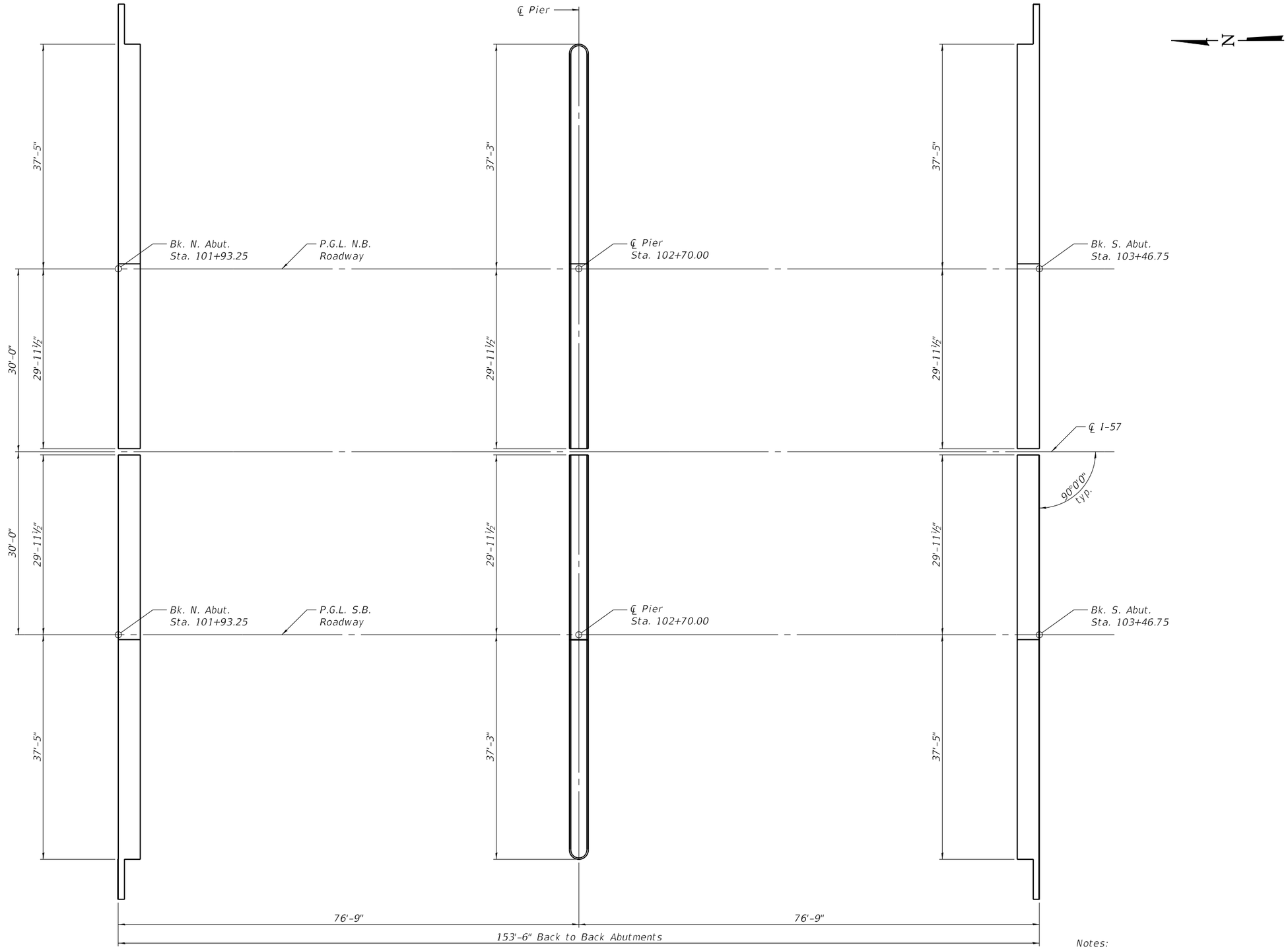

PLAN

Notes:
1. Pier dimensions are to the end of the Pier cap.

FILE NAME: H:\P\222064 - IDOT PTB 203 Item 49 District 9 V-V\222064.011 - I57 over Gun\Microstation\0280093_0094-78884-003-Substructure Layout.dgn

OATES ASSOCIATES www.oatesassociates.com ILLINOIS DESIGN FIRM LICENSE NO.: 184.001115	USER NAME =	DESIGNED - ORG	REVISED -	STATE OF ILLINOIS DEPARTMENT OF TRANSPORTATION	FOOTING LAYOUT STRUCTURE NO. 028-0093 (N.B.) & 028-0094 (S.B.)	F.A.I. RTE.	SECTION	COUNTY	TOTAL SHEETS / SHEET NO.
		CHECKED - KBC	REVISED -			57	(28-1)B-2	FRANKLIN	598 / 304
	PLOT SCALE =	DRAWN - ORG	REVISED -					CONTRACT NO. 78884	
	PLOT DATE = 12/13/2024	CHECKED - KBC	REVISED -		SHEET 3 OF 39 SHEETS		ILLINOIS	FED. AID PROJECT	

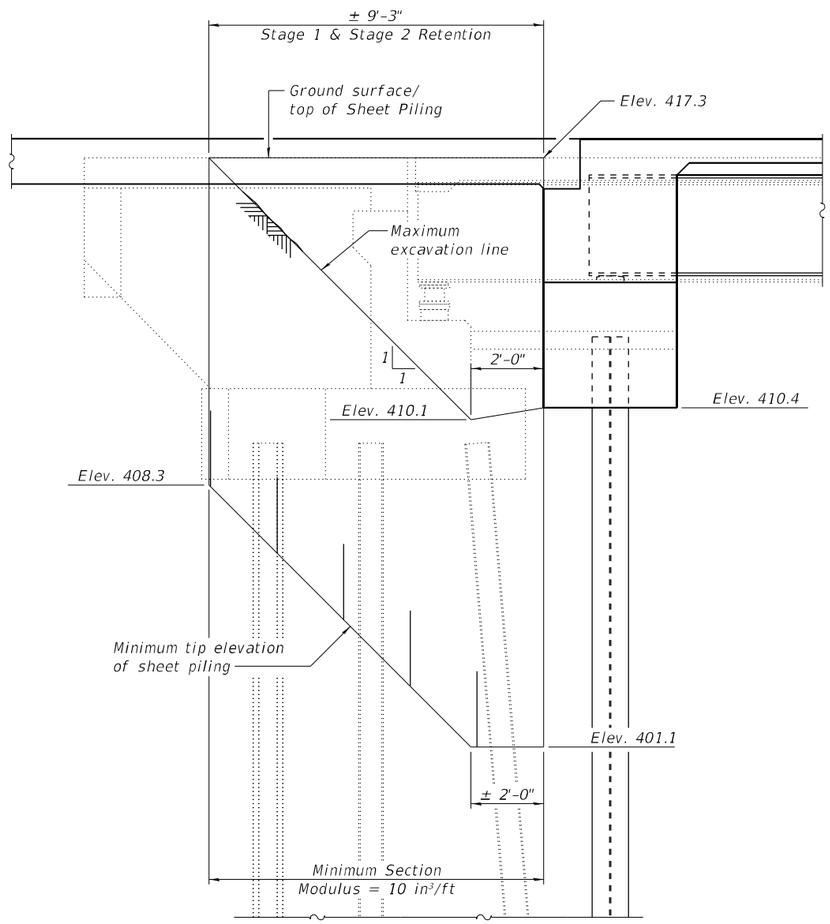

NORTH ABUTMENT ①②

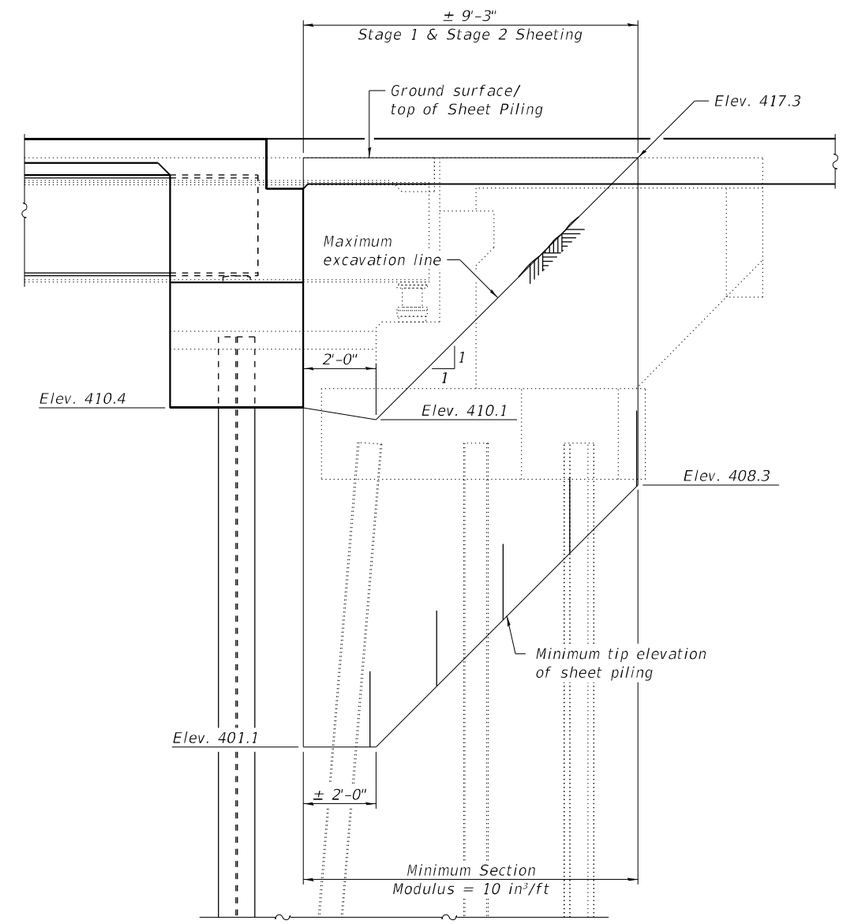

SOUTH ABUTMENT ①②

Notes:

① If the Contractor chooses to alter the temporary cantilevered sheet piling design requirements shown, a design submittal including plan details and calculations will be required for review and acceptance by the Engineer.

② The Contractor shall connect the first sheet to the existing abutment wall to ensure stability of sheets driven to the top of the existing footing. This connection shall be reviewed and accepted by the engineer and included in the cost for Temporary Sheet Piling.

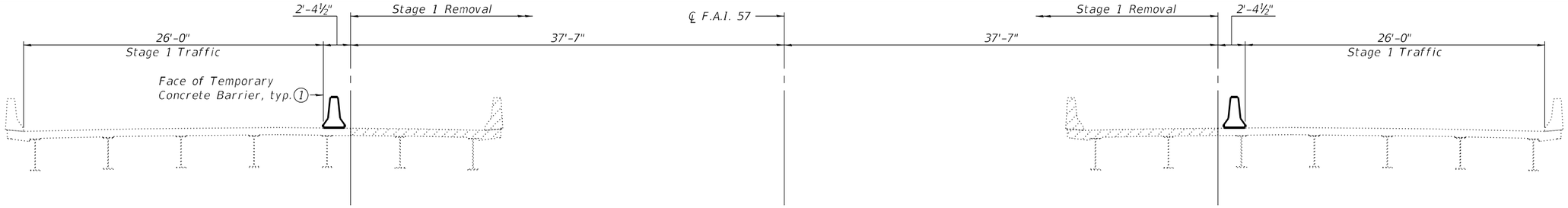

STAGE 1 REMOVAL

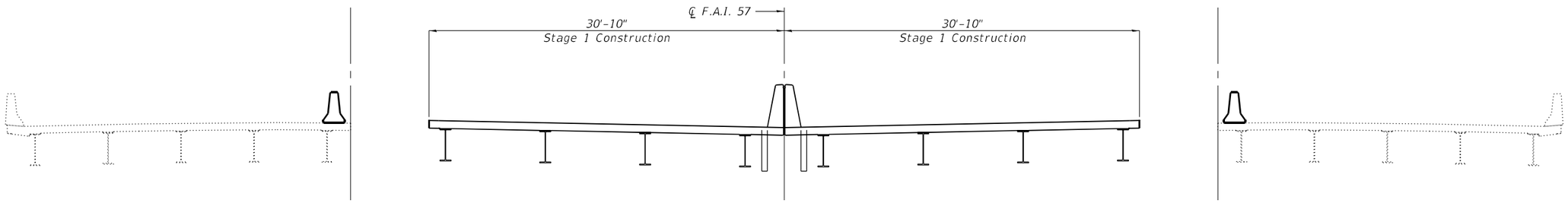

STAGE 1 CONSTRUCTION

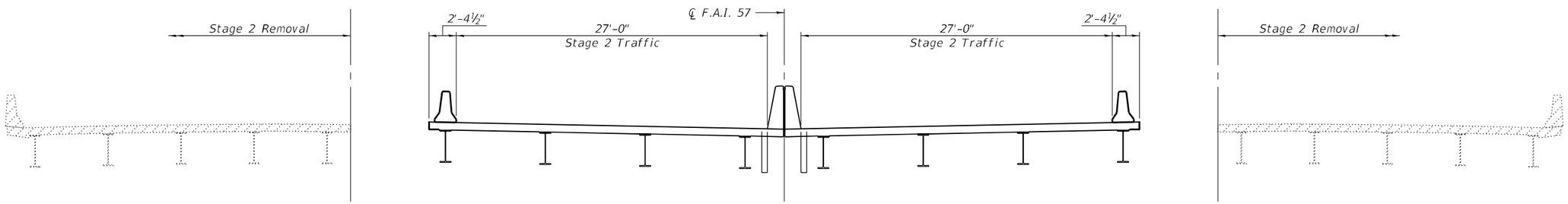

STAGE 2 REMOVAL

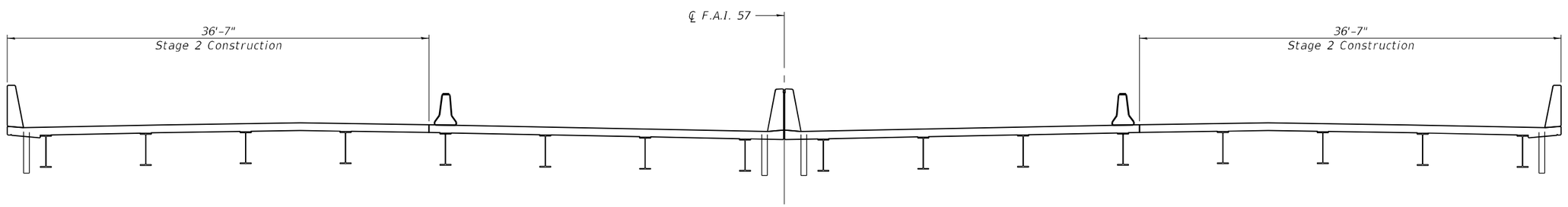

STAGE 2 CONSTRUCTION

Notes:

1. For details of Temporary Concrete Barrier, see sheet 6 of 39. For quantity of Temporary Concrete Barrier and related traffic control, see roadway plans.

FILE NAME: H:\P222064 - IDOT PTB 203 Item 49 District 9 V-x\222064.011 - I57 over Gun\Microstation\0280093_0094-78884-005-Stage Construction Details.dgn

OATES ASSOCIATES www.oatesassociates.com ILLINOIS DESIGN FIRM LICENSE NO.: 184.001115	USER NAME =	DESIGNED - ORG	REVISED -
		CHECKED - KBC	REVISED -
	PLOT SCALE =	DRAWN - ORG	REVISED -
	PLOT DATE = 12/13/2024	CHECKED - KBC	REVISED -

STATE OF ILLINOIS
DEPARTMENT OF TRANSPORTATION

STAGE CONSTRUCTION DETAILS
STRUCTURE NO. 028-0093 (N.B.) & 028-0094 (S.B.)

SHEET 5 OF 39 SHEETS

F.A.I. RTE.	SECTION	COUNTY	TOTAL SHEETS	SHEET NO.
57	(28-1)B-2	FRANKLIN	598	306
		CONTRACT NO. 78884		
		ILLINOIS	FED. AID PROJECT	

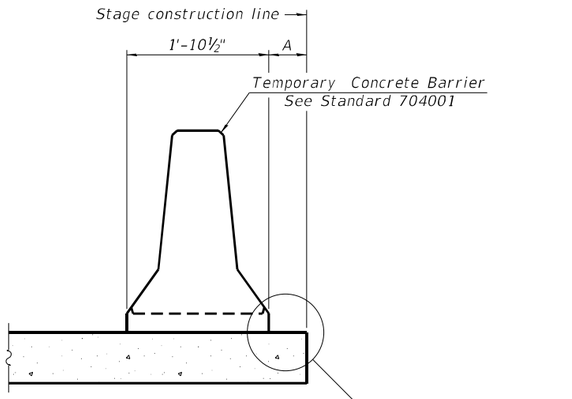

When "A" is 3'-1" or less, the temporary concrete barrier shall be restrained to the new slab according to Detail I, II or III. No restraint is required when "A" is greater than 3'-1".

NEW SLAB OR NEW DECK BEAM

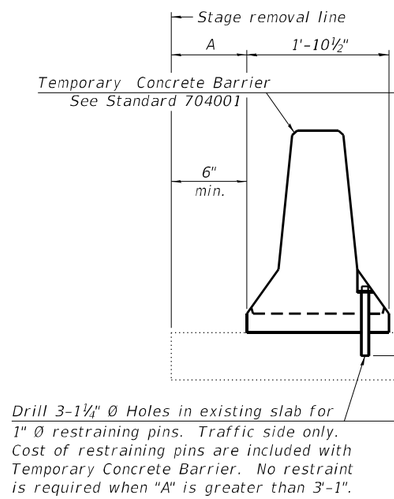

Drill 3-1¼" Ø Holes in existing slab for 1" Ø restraining pins. Traffic side only. Cost of restraining pins are included with Temporary Concrete Barrier. No restraint is required when "A" is greater than 3'-1".

EXISTING SLAB

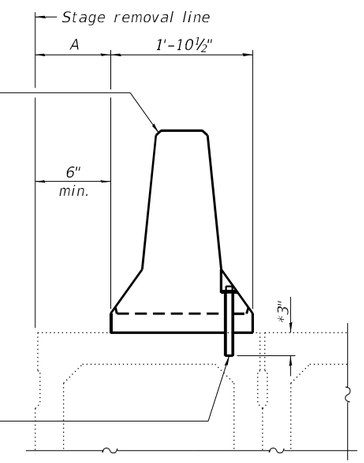

* When hot-mix asphalt wearing surface is present, embedment shall be 3" plus the wearing surface depth.

EXISTING DECK BEAM

SECTIONS THRU SLAB OR DECK BEAM

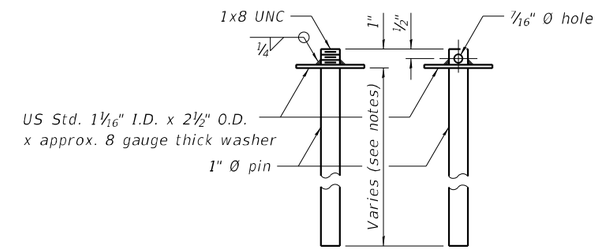

RESTRAINING PIN

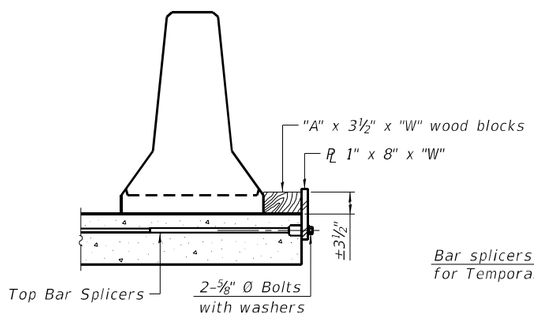

DETAIL I

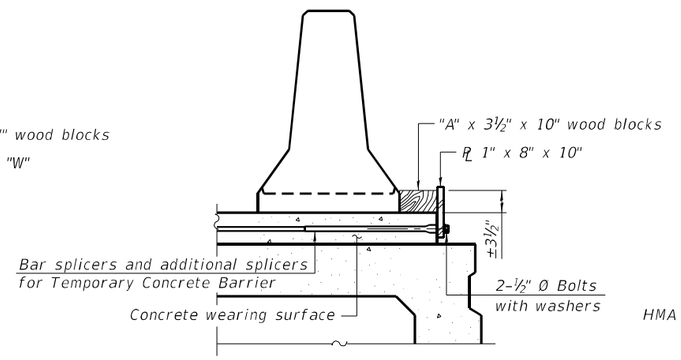

DETAIL II

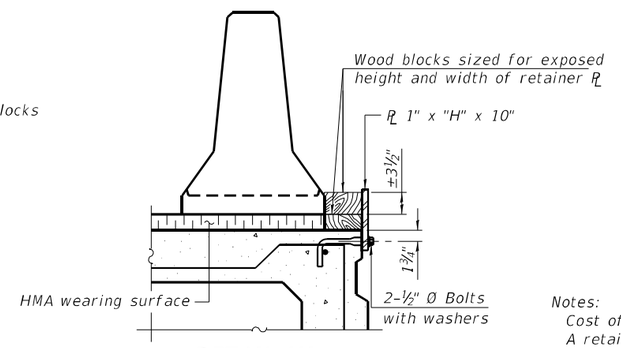

DETAIL III

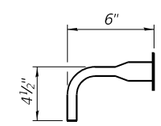

BAR SPLICER FOR #4 BAR - DETAIL III

Notes:

Cost of retainer assembly is included with Temporary Concrete Barrier.

A retainer assembly shall be located at the approximate ℄ of each temporary concrete barrier.

The retainer plate shall not be removed until the concrete on the adjacent stage is ready to be poured. For Detail III applications the retainer plate shall not be removed until just prior to placing the adjacent beam.

When the 'A' dimension is less than 1½", the wood block shall be omitted and the barrier shall be placed in direct contact with the steel retainer plate. For deck beam applications the minimum required 'A' distance is 6" to accommodate the shear key clamping device.

Detail I - Installation for a new bridge deck or bridge slab.

Detail II - Installation for a new deck beam with an initial concrete wearing surface. Additional bar splicers shall be provided at 6'-0" centers and paired with the bar splicers of the concrete wearing surface reinforcement to accommodate the installation of the retainer assemblies. The cost of the additional bar splicers is included with the concrete wearing surface.

Detail III - Installation for a new deck beam with no initial wearing surface or with an initial hot-mix asphalt (HMA) wearing surface present. The deck beam directly beneath the temporary concrete barrier shall be fabricated with bar splicer inserts in the side of the beam, as detailed, to accommodate the installation of the retainer assemblies. A pair of bar splicers, 6" apart, shall be placed at 6'-0" centers along the length of the beam. The cost of the bar splicers is included with the deck beam.

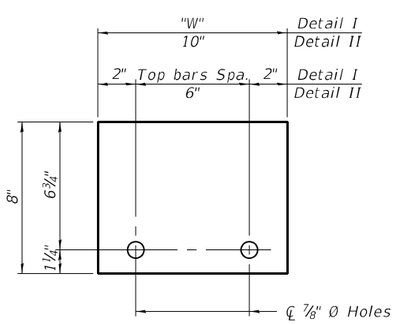

STEEL RETAINER PL 1" x 8" x "W"

(Detail I and II)

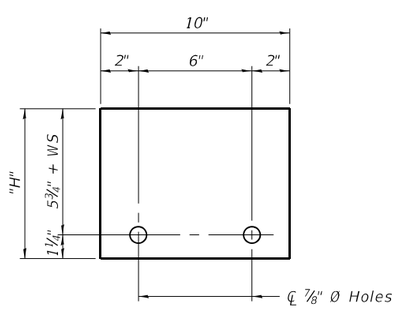

STEEL RETAINER PL 1" x "H" x 10"

(Detail III)

RAILING CRITERIA

NCHRP 350 Test Level	3
Railing Weight (plf)	440

R-27 5-15-2023

FILE NAME: H:\P\222064 - IDOT PTB 203 Item 49 District 9 V:\v\222064.011 - I57 over Gun\Microstation\0280093_0094-78884-006-Temporary Concrete Barrier.dgn

OATES ASSOCIATES
www.oatesassociates.com
ILLINOIS DESIGN FIRM LICENSE NO.: 184.001115

USER NAME =	DESIGNED -	REVISED -	
	CHECKED -	REVISED -	
PLOT SCALE =	DRAWN -	REVISED -	
PLOT DATE = 12/13/2024	CHECKED -	REVISED -	

STATE OF ILLINOIS
DEPARTMENT OF TRANSPORTATION

TEMPORARY CONCRETE BARRIER
STRUCTURE NO. 028-0093 (N.B.) & 028-0094 (S.B.)

SHEET 6 OF 39 SHEETS

F.A.I. RTE.	SECTION	COUNTY	TOTAL SHEETS	SHEET NO.
57	(28-1)B-2	FRANKLIN	598	307

CONTRACT NO. 78884

ILLINOIS | FED. AID PROJECT

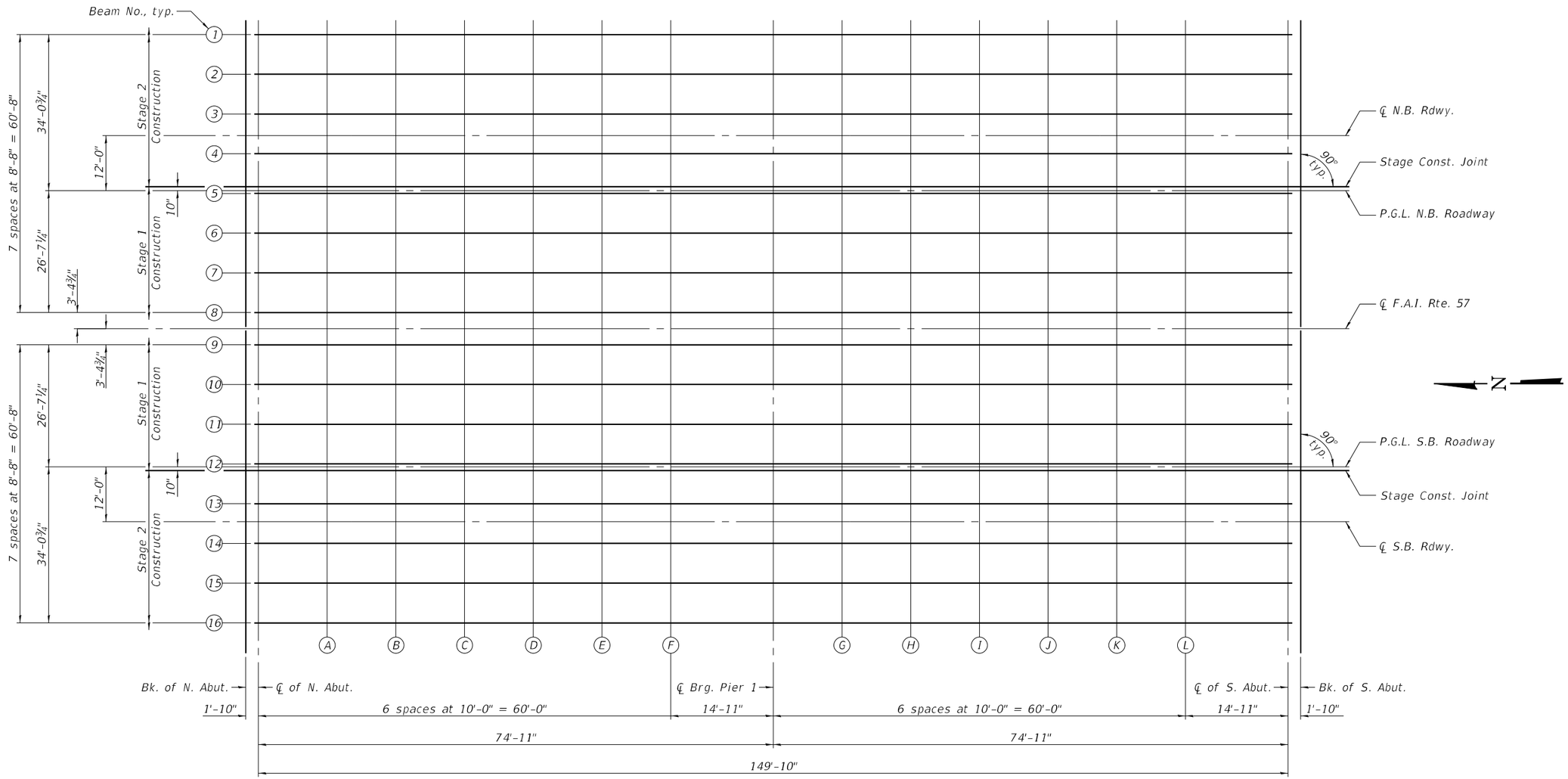

PLAN

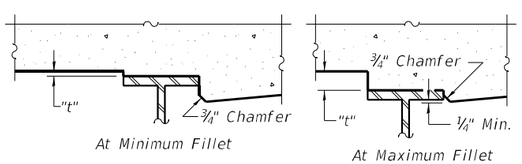

FILLET HEIGHTS ①

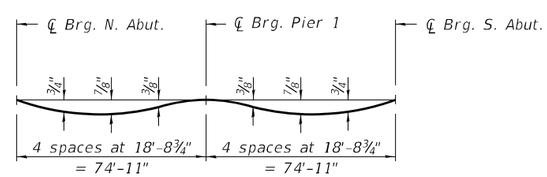

DEAD LOAD DEFLECTION DIAGRAM ③

(Includes weight of concrete only.)

Notes:

① To determine "t": After all structural steel has been erected, elevations of the top flanges of the beams shall be taken at intervals shown in Plan and on sheets 8 thru 11 of 39. These elevations subtracted from the "Theoretical Grade Elevations Adjusted for Dead Load Deflection and Grinding" shown below, minus the initial slab thickness prior to grinding, equals the fillet heights "t" above top flange of beams.

② The slab is to be ground after curing to achieve smoothness, but the slab is not to be ground to elevations below the "Theoretical Grade Elevations" shown on 8 thru 11 of 39. For grinding the deck, see Special Provisions.

③ The deflections are not to be used in the field if the engineer is working from the "Theoretical Grade Elevations Adjusted for Dead Load Deflection and Grinding" as shown on sheets 8 thru 11 of 39.

BEAM 1

Location	Station	Offset	Theoretical Grade Elevations	Theoretical Grade Elevations Adjusted For Dead Load Deflection and Grinding
Bk. of N. Abut.	101+93.25	-64.06	417.97	417.99
℄ Brg. N. Abut.	101+95.08	-64.06	417.97	417.99
A	102+05.08	-64.06	417.97	418.03
B	102+15.08	-64.06	417.97	418.06
C	102+25.08	-64.06	417.97	418.07
D	102+35.08	-64.06	417.97	418.06
E	102+45.08	-64.06	417.97	418.04
F	102+55.08	-64.06	417.97	418.01
℄ Brg. Pier	102+70.00	-64.06	417.97	417.99
G	102+80.00	-64.06	417.97	418.00
H	102+90.00	-64.06	417.97	418.03
I	103+00.00	-64.06	417.97	418.05
J	103+10.00	-64.06	417.97	418.07
K	103+20.00	-64.06	417.97	418.07
L	103+30.00	-64.06	417.97	418.05
℄ Brg. S. Abut.	103+44.92	-64.06	417.97	417.99
Bk. of S. Abut.	103+46.75	-64.06	417.97	417.99

BEAM 2

Location	Station	Offset	Theoretical Grade Elevations	Theoretical Grade Elevations Adjusted For Dead Load Deflection and Grinding
Bk. of N. Abut.	101+93.25	-55.40	418.14	418.16
℄ Brg. N. Abut.	101+95.08	-55.40	418.14	418.16
A	102+05.08	-55.40	418.14	418.20
B	102+15.08	-55.40	418.14	418.23
C	102+25.08	-55.40	418.14	418.24
D	102+35.08	-55.40	418.14	418.24
E	102+45.08	-55.40	418.14	418.21
F	102+55.08	-55.40	418.14	418.19
℄ Brg. Pier	102+70.00	-55.40	418.14	418.16
G	102+80.00	-55.40	418.14	418.17
H	102+90.00	-55.40	418.14	418.20
I	103+00.00	-55.40	418.14	418.23
J	103+10.00	-55.40	418.14	418.24
K	103+20.00	-55.40	418.14	418.24
L	103+30.00	-55.40	418.14	418.22
℄ Brg. S. Abut.	103+44.92	-55.40	418.14	418.16
Bk. of S. Abut.	103+46.75	-55.40	418.14	418.16

BEAM 3

Location	Station	Offset	Theoretical Grade Elevations	Theoretical Grade Elevations Adjusted For Dead Load Deflection and Grinding
Bk. of N. Abut.	101+93.25	-46.73	418.28	418.30
℄ Brg. N. Abut.	101+95.08	-46.73	418.28	418.30
A	102+05.08	-46.73	418.28	418.34
B	102+15.08	-46.73	418.28	418.37
C	102+25.08	-46.73	418.28	418.38
D	102+35.08	-46.73	418.28	418.37
E	102+45.08	-46.73	418.28	418.35
F	102+55.08	-46.73	418.28	418.32
℄ Brg. Pier	102+70.00	-46.73	418.28	418.30
G	102+80.00	-46.73	418.28	418.31
H	102+90.00	-46.73	418.28	418.34
I	103+00.00	-46.73	418.28	418.36
J	103+10.00	-46.73	418.28	418.38
K	103+20.00	-46.73	418.28	418.38
L	103+30.00	-46.73	418.28	418.36
℄ Brg. S. Abut.	103+44.92	-46.73	418.28	418.30
Bk. of S. Abut.	103+46.75	-46.73	418.28	418.30

℄ N.B. ROADWAY

Location	Station	Offset	Theoretical Grade Elevations	Theoretical Grade Elevations Adjusted For Dead Load Deflection and Grinding
Bk. of N. Abut.	101+93.25	-42.00	418.35	418.37
℄ Brg. N. Abut.	101+95.08	-42.00	418.35	418.37
A	102+05.08	-42.00	418.35	418.41
B	102+15.08	-42.00	418.35	418.44
C	102+25.08	-42.00	418.35	418.45
D	102+35.08	-42.00	418.35	418.44
E	102+45.08	-42.00	418.35	418.42
F	102+55.08	-42.00	418.35	418.39
℄ Brg. Pier	102+70.00	-42.00	418.35	418.37
G	102+80.00	-42.00	418.35	418.38
H	102+90.00	-42.00	418.35	418.41
I	103+00.00	-42.00	418.35	418.44
J	103+10.00	-42.00	418.35	418.45
K	103+20.00	-42.00	418.35	418.44
L	103+30.00	-42.00	418.35	418.42
℄ Brg. S. Abut.	103+44.92	-42.00	418.35	418.37
Bk. of S. Abut.	103+46.75	-42.00	418.35	418.37

BEAM 4

Location	Station	Offset	Theoretical Grade Elevations	Theoretical Grade Elevations Adjusted For Dead Load Deflection and Grinding
Bk. of N. Abut.	101+93.25	-38.06	418.29	418.31
℄ Brg. N. Abut.	101+95.08	-38.06	418.29	418.31
A	102+05.08	-38.06	418.29	418.35
B	102+15.08	-38.06	418.29	418.38
C	102+25.08	-38.06	418.29	418.39
D	102+35.08	-38.06	418.29	418.39
E	102+45.08	-38.06	418.29	418.36
F	102+55.08	-38.06	418.29	418.34
℄ Brg. Pier	102+70.00	-38.06	418.29	418.31
G	102+80.00	-38.06	418.29	418.32
H	102+90.00	-38.06	418.29	418.35
I	103+00.00	-38.06	418.29	418.38
J	103+10.00	-38.06	418.29	418.39
K	103+20.00	-38.06	418.29	418.39
L	103+30.00	-38.06	418.29	418.37
℄ Brg. S. Abut.	103+44.92	-38.06	418.29	418.31
Bk. of S. Abut.	103+46.75	-38.06	418.29	418.31

STAGE CONSTRUCTION JOINT

Location	Station	Offset	Theoretical Grade Elevations	Theoretical Grade Elevations Adjusted For Dead Load Deflection and Grinding
Bk. of N. Abut.	101+93.25	-30.83	418.18	418.20
℄ Brg. N. Abut.	101+95.08	-30.83	418.18	418.20
A	102+05.08	-30.83	418.18	418.24
B	102+15.08	-30.83	418.18	418.27
C	102+25.08	-30.83	418.18	418.28
D	102+35.08	-30.83	418.18	418.28
E	102+45.08	-30.83	418.18	418.25
F	102+55.08	-30.83	418.18	418.23
℄ Brg. Pier	102+70.00	-30.83	418.18	418.20
G	102+80.00	-30.83	418.18	418.22
H	102+90.00	-30.83	418.18	418.24
I	103+00.00	-30.83	418.18	418.27
J	103+10.00	-30.83	418.18	418.28
K	103+20.00	-30.83	418.18	418.28
L	103+30.00	-30.83	418.18	418.26
℄ Brg. S. Abut.	103+44.92	-30.83	418.18	418.20
Bk. of S. Abut.	103+46.75	-30.83	418.18	418.20

PROFILE GRADE - N.B.

Location	Station	Offset	Theoretical Grade Elevations	Theoretical Grade Elevations Adjusted For Dead Load Deflection and Grinding
Bk. of N. Abut.	101+93.25	-30.00	418.17	418.19
℄ Brg. N. Abut.	101+95.08	-30.00	418.17	418.19
A	102+05.08	-30.00	418.17	418.23
B	102+15.08	-30.00	418.17	418.26
C	102+25.08	-30.00	418.17	418.27
D	102+35.08	-30.00	418.17	418.26
E	102+45.08	-30.00	418.17	418.24
F	102+55.08	-30.00	418.17	418.21
℄ Brg. Pier	102+70.00	-30.00	418.17	418.19
G	102+80.00	-30.00	418.17	418.20
H	102+90.00	-30.00	418.17	418.23
I	103+00.00	-30.00	418.17	418.26
J	103+10.00	-30.00	418.17	418.27
K	103+20.00	-30.00	418.17	418.27
L	103+30.00	-30.00	418.17	418.25
℄ Brg. S. Abut.	103+44.92	-30.00	418.17	418.19
Bk. of S. Abut.	103+46.75	-30.00	418.17	418.19

BEAM 5

Location	Station	Offset	Theoretical Grade Elevations	Theoretical Grade Elevations Adjusted For Dead Load Deflection and Grinding
Bk. of N. Abut.	101+93.25	-29.40	418.16	418.18
℄ Brg. N. Abut.	101+95.08	-29.40	418.16	418.18
A	102+05.08	-29.40	418.16	418.22
B	102+15.08	-29.40	418.16	418.25
C	102+25.08	-29.40	418.16	418.26
D	102+35.08	-29.40	418.16	418.25
E	102+45.08	-29.40	418.16	418.23
F	102+55.08	-29.40	418.16	418.20
℄ Brg. Pier	102+70.00	-29.40	418.16	418.18
G	102+80.00	-29.40	418.16	418.19
H	102+90.00	-29.40	418.16	418.22
I	103+00.00	-29.40	418.16	418.24
J	103+10.00	-29.40	418.16	418.26
K	103+20.00	-29.40	418.16	418.26
L	103+30.00	-29.40	418.16	418.23
℄ Brg. S. Abut.	103+44.92	-29.40	418.16	418.18
Bk. of S. Abut.	103+46.75	-29.40	418.16	418.18

BEAM 6

Location	Station	Offset	Theoretical Grade Elevations	Theoretical Grade Elevations Adjusted For Dead Load Deflection and Grinding
Bk. of N. Abut.	101+93.25	-20.73	417.98	418.00
℄ Brg. N. Abut.	101+95.08	-20.73	417.98	418.00
A	102+05.08	-20.73	417.98	418.04
B	102+15.08	-20.73	417.98	418.07
C	102+25.08	-20.73	417.98	418.09
D	102+35.08	-20.73	417.98	418.08
E	102+45.08	-20.73	417.98	418.06
F	102+55.08	-20.73	417.98	418.03
℄ Brg. Pier	102+70.00	-20.73	417.98	418.00
G	102+80.00	-20.73	417.98	418.02
H	102+90.00	-20.73	417.98	418.04
I	103+00.00	-20.73	417.98	418.07
J	103+10.00	-20.73	417.98	418.08
K	103+20.00	-20.73	417.98	418.08
L	103+30.00	-20.73	417.98	418.06
℄ Brg. S. Abut.	103+44.92	-20.73	417.98	418.00
Bk. of S. Abut.	103+46.75	-20.73	417.98	418.00

BEAM 7

Location	Station	Offset	Theoretical Grade Elevations	Theoretical Grade Elevations Adjusted For Dead Load Deflection and Grinding
Bk. of N. Abut.	101+93.25	-12.06	417.81	417.83
℄ Brg. N. Abut.	101+95.08	-12.06	417.81	417.83
A	102+05.08	-12.06	417.81	417.87
B	102+15.08	-12.06	417.81	417.90
C	102+25.08	-12.06	417.81	417.91
D	102+35.08	-12.06	417.81	417.91
E	102+45.08	-12.06	417.81	417.88
F	102+55.08	-12.06	417.81	417.86
℄ Brg. Pier	102+70.00	-12.06	417.81	417.83
G	102+80.00	-12.06	417.81	417.84
H	102+90.00	-12.06	417.81	417.87
I	103+00.00	-12.06	417.81	417.90
J	103+10.00	-12.06	417.81	417.91
K	103+20.00	-12.06	417.81	417.91
L	103+30.00	-12.06	417.81	417.89
℄ Brg. S. Abut.	103+44.92	-12.06	417.81	417.83
Bk. of S. Abut.	103+46.75	-12.06	417.81	417.83

BEAM 8

Location	Station	Offset	Theoretical Grade Elevations	Theoretical Grade Elevations Adjusted For Dead Load Deflection and Grinding
Bk. of N. Abut.	101+93.25	-3.40	417.64	417.66
℄ Brg. N. Abut.	101+95.08	-3.40	417.64	417.66
A	102+05.08	-3.40	417.64	417.70
B	102+15.08	-3.40	417.64	417.73
C	102+25.08	-3.40	417.64	417.74
D	102+35.08	-3.40	417.64	417.73
E	102+45.08	-3.40	417.64	417.71
F	102+55.08	-3.40	417.64	417.68
℄ Brg. Pier	102+70.00	-3.40	417.64	417.66
G	102+80.00	-3.40	417.64	417.67
H	102+90.00	-3.40	417.64	417.70
I	103+00.00	-3.40	417.64	417.72
J	103+10.00	-3.40	417.64	417.74
K	103+20.00	-3.40	417.64	417.74
L	103+30.00	-3.40	417.64	417.71
℄ Brg. S. Abut.	103+44.92	-3.40	417.64	417.66
Bk. of S. Abut.	103+46.75	-3.40	417.64	417.66

BEAM 9

Location	Station	Offset	Theoretical Grade Elevations	Theoretical Grade Elevations Adjusted For Dead Load Deflection and Grinding
Bk. of N. Abut.	101+93.25	3.40	417.64	417.66
℄ Brg. N. Abut.	101+95.08	3.40	417.64	417.66
A	102+05.08	3.40	417.64	417.70
B	102+15.08	3.40	417.64	417.73
C	102+25.08	3.40	417.64	417.74
D	102+35.08	3.40	417.64	417.73
E	102+45.08	3.40	417.64	417.71
F	102+55.08	3.40	417.64	417.68
℄ Brg. Pier	102+70.00	3.40	417.64	417.66
G	102+80.00	3.40	417.64	417.67
H	102+90.00	3.40	417.64	417.70
I	103+00.00	3.40	417.64	417.72
J	103+10.00	3.40	417.64	417.74
K	103+20.00	3.40	417.64	417.74
L	103+30.00	3.40	417.64	417.71
℄ Brg. S. Abut.	103+44.92	3.40	417.64	417.66
Bk. of S. Abut.	103+46.75	3.40	417.64	417.66

BEAM 10

Location	Station	Offset	Theoretical Grade Elevations	Theoretical Grade Elevations Adjusted For Dead Load Deflection and Grinding
Bk. of N. Abut.	101+93.25	12.06	417.81	417.83
℄ Brg. N. Abut.	101+95.08	12.06	417.81	417.83
A	102+05.08	12.06	417.81	417.87
B	102+15.08	12.06	417.81	417.90
C	102+25.08	12.06	417.81	417.91
D	102+35.08	12.06	417.81	417.91
E	102+45.08	12.06	417.81	417.88
F	102+55.08	12.06	417.81	417.86
℄ Brg. Pier	102+70.00	12.06	417.81	417.83
G	102+80.00	12.06	417.81	417.84
H	102+90.00	12.06	417.81	417.87
I	103+00.00	12.06	417.81	417.90
J	103+10.00	12.06	417.81	417.91
K	103+20.00	12.06	417.81	417.91
L	103+30.00	12.06	417.81	417.89
℄ Brg. S. Abut.	103+44.92	12.06	417.81	417.83
Bk. of S. Abut.	103+46.75	12.06	417.81	417.83

BEAM 11

Location	Station	Offset	Theoretical Grade Elevations	Theoretical Grade Elevations Adjusted For Dead Load Deflection and Grinding
Bk. of N. Abut.	101+93.25	20.73	417.98	418.00
℄ Brg. N. Abut.	101+95.08	20.73	417.98	418.00
A	102+05.08	20.73	417.98	418.04
B	102+15.08	20.73	417.98	418.07
C	102+25.08	20.73	417.98	418.09
D	102+35.08	20.73	417.98	418.08
E	102+45.08	20.73	417.98	418.06
F	102+55.08	20.73	417.98	418.03
℄ Brg. Pier	102+70.00	20.73	417.98	418.00
G	102+80.00	20.73	417.98	418.02
H	102+90.00	20.73	417.98	418.04
I	103+00.00	20.73	417.98	418.07
J	103+10.00	20.73	417.98	418.08
K	103+20.00	20.73	417.98	418.08
L	103+30.00	20.73	417.98	418.06
℄ Brg. S. Abut.	103+44.92	20.73	417.98	418.00
Bk. of S. Abut.	103+46.75	20.73	417.98	418.00

BEAM 12

Location	Station	Offset	Theoretical Grade Elevations	Theoretical Grade Elevations Adjusted For Dead Load Deflection and Grinding
Bk. of N. Abut.	101+93.25	29.40	418.16	418.18
℄ Brg. N. Abut.	101+95.08	29.40	418.16	418.18
A	102+05.08	29.40	418.16	418.22
B	102+15.08	29.40	418.16	418.25
C	102+25.08	29.40	418.16	418.26
D	102+35.08	29.40	418.16	418.25
E	102+45.08	29.40	418.16	418.23
F	102+55.08	29.40	418.16	418.20
℄ Brg. Pier	102+70.00	29.40	418.16	418.18
G	102+80.00	29.40	418.16	418.19
H	102+90.00	29.40	418.16	418.22
I	103+00.00	29.40	418.16	418.24
J	103+10.00	29.40	418.16	418.26
K	103+20.00	29.40	418.16	418.26
L	103+30.00	29.40	418.16	418.23
℄ Brg. S. Abut.	103+44.92	29.40	418.16	418.18
Bk. of S. Abut.	103+46.75	29.40	418.16	418.18

PROFILE GRADE - S.B.

Location	Station	Offset	Theoretical Grade Elevations	Theoretical Grade Elevations Adjusted For Dead Load Deflection and Grinding
Bk. of N. Abut.	101+93.25	30.00	418.17	418.19
℄ Brg. N. Abut.	101+95.08	30.00	418.17	418.19
A	102+05.08	30.00	418.17	418.23
B	102+15.08	30.00	418.17	418.26
C	102+25.08	30.00	418.17	418.27
D	102+35.08	30.00	418.17	418.26
E	102+45.08	30.00	418.17	418.24
F	102+55.08	30.00	418.17	418.21
℄ Brg. Pier	102+70.00	30.00	418.17	418.19
G	102+80.00	30.00	418.17	418.20
H	102+90.00	30.00	418.17	418.23
I	103+00.00	30.00	418.17	418.26
J	103+10.00	30.00	418.17	418.27
K	103+20.00	30.00	418.17	418.27
L	103+30.00	30.00	418.17	418.25
℄ Brg. S. Abut.	103+44.92	30.00	418.17	418.19
Bk. of S. Abut.	103+46.75	30.00	418.17	418.19

STAGE CONSTRUCTION JOINT

Location	Station	Offset	Theoretical Grade Elevations	Theoretical Grade Elevations Adjusted For Dead Load Deflection and Grinding
Bk. of N. Abut.	101+93.25	30.83	418.18	418.20
℄ Brg. N. Abut.	101+95.08	30.83	418.18	418.20
A	102+05.08	30.83	418.18	418.24
B	102+15.08	30.83	418.18	418.27
C	102+25.08	30.83	418.18	418.28
D	102+35.08	30.83	418.18	418.28
E	102+45.08	30.83	418.18	418.25
F	102+55.08	30.83	418.18	418.23
℄ Brg. Pier	102+70.00	30.83	418.18	418.20
G	102+80.00	30.83	418.18	418.22
H	102+90.00	30.83	418.18	418.24
I	103+00.00	30.83	418.18	418.27
J	103+10.00	30.83	418.18	418.28
K	103+20.00	30.83	418.18	418.28
L	103+30.00	30.83	418.18	418.26
℄ Brg. S. Abut.	103+44.92	30.83	418.18	418.20
Bk. of S. Abut.	103+46.75	30.83	418.18	418.20

BEAM 13

Location	Station	Offset	Theoretical Grade Elevations	Theoretical Grade Elevations Adjusted For Dead Load Deflection and Grinding
Bk. of N. Abut.	101+93.25	38.06	418.29	418.31
℄ Brg. N. Abut.	101+95.08	38.06	418.29	418.31
A	102+05.08	38.06	418.29	418.35
B	102+15.08	38.06	418.29	418.38
C	102+25.08	38.06	418.29	418.39
D	102+35.08	38.06	418.29	418.39
E	102+45.08	38.06	418.29	418.36
F	102+55.08	38.06	418.29	418.34
℄ Brg. Pier	102+70.00	38.06	418.29	418.31
G	102+80.00	38.06	418.29	418.32
H	102+90.00	38.06	418.29	418.35
I	103+00.00	38.06	418.29	418.38
J	103+10.00	38.06	418.29	418.39
K	103+20.00	38.06	418.29	418.39
L	103+30.00	38.06	418.29	418.37
℄ Brg. S. Abut.	103+44.92	38.06	418.29	418.31
Bk. of S. Abut.	103+46.75	38.06	418.29	418.31

℄ S.B. ROADWAY

Location	Station	Offset	Theoretical Grade Elevations	Theoretical Grade Elevations Adjusted For Dead Load Deflection and Grinding
Bk. of N. Abut.	101+93.25	42.00	418.35	418.37
℄ Brg. N. Abut.	101+95.08	42.00	418.35	418.37
A	102+05.08	42.00	418.35	418.41
B	102+15.08	42.00	418.35	418.44
C	102+25.08	42.00	418.35	418.45
D	102+35.08	42.00	418.35	418.44
E	102+45.08	42.00	418.35	418.42
F	102+55.08	42.00	418.35	418.39
℄ Brg. Pier	102+70.00	42.00	418.35	418.37
G	102+80.00	42.00	418.35	418.38
H	102+90.00	42.00	418.35	418.41
I	103+00.00	42.00	418.35	418.44
J	103+10.00	42.00	418.35	418.45
K	103+20.00	42.00	418.35	418.44
L	103+30.00	42.00	418.35	418.42
℄ Brg. S. Abut.	103+44.92	42.00	418.35	418.37
Bk. of S. Abut.	103+46.75	42.00	418.35	418.37

BEAM 14

Location	Station	Offset	Theoretical Grade Elevations	Theoretical Grade Elevations Adjusted For Dead Load Deflection and Grinding
Bk. of N. Abut.	101+93.25	46.73	418.28	418.30
℄ Brg. N. Abut.	101+95.08	46.73	418.28	418.30
A	102+05.08	46.73	418.28	418.34
B	102+15.08	46.73	418.28	418.37
C	102+25.08	46.73	418.28	418.38
D	102+35.08	46.73	418.28	418.37
E	102+45.08	46.73	418.28	418.35
F	102+55.08	46.73	418.28	418.32
℄ Brg. Pier	102+70.00	46.73	418.28	418.30
G	102+80.00	46.73	418.28	418.31
H	102+90.00	46.73	418.28	418.34
I	103+00.00	46.73	418.28	418.36
J	103+10.00	46.73	418.28	418.38
K	103+20.00	46.73	418.28	418.38
L	103+30.00	46.73	418.28	418.36
℄ Brg. S. Abut.	103+44.92	46.73	418.28	418.30
Bk. of S. Abut.	103+46.75	46.73	418.28	418.30

BEAM 15

Location	Station	Offset	Theoretical Grade Elevations	Theoretical Grade Elevations Adjusted For Dead Load Deflection and Grinding
Bk. of N. Abut.	101+93.25	55.40	418.14	418.16
℄ Brg. N. Abut.	101+95.08	55.40	418.14	418.16
A	102+05.08	55.40	418.14	418.20
B	102+15.08	55.40	418.14	418.23
C	102+25.08	55.40	418.14	418.24
D	102+35.08	55.40	418.14	418.24
E	102+45.08	55.40	418.14	418.21
F	102+55.08	55.40	418.14	418.19
℄ Brg. Pier	102+70.00	55.40	418.14	418.16
G	102+80.00	55.40	418.14	418.17
H	102+90.00	55.40	418.14	418.20
I	103+00.00	55.40	418.14	418.23
J	103+10.00	55.40	418.14	418.24
K	103+20.00	55.40	418.14	418.24
L	103+30.00	55.40	418.14	418.22
℄ Brg. S. Abut.	103+44.92	55.40	418.14	418.16
Bk. of S. Abut.	103+46.75	55.40	418.14	418.16

BEAM 16

Location	Station	Offset	Theoretical Grade Elevations	Theoretical Grade Elevations Adjusted For Dead Load Deflection and Grinding
Bk. of N. Abut.	101+93.25	64.06	417.97	417.99
℄ Brg. N. Abut.	101+95.08	64.06	417.97	417.99
A	102+05.08	64.06	417.97	418.03
B	102+15.08	64.06	417.97	418.06
C	102+25.08	64.06	417.97	418.07
D	102+35.08	64.06	417.97	418.06
E	102+45.08	64.06	417.97	418.04
F	102+55.08	64.06	417.97	418.01
℄ Brg. Pier	102+70.00	64.06	417.97	417.99
G	102+80.00	64.06	417.97	418.00
H	102+90.00	64.06	417.97	418.03
I	103+00.00	64.06	417.97	418.05
J	103+10.00	64.06	417.97	418.07
K	103+20.00	64.06	417.97	418.07
L	103+30.00	64.06	417.97	418.05
℄ Brg. S. Abut.	103+44.92	64.06	417.97	417.99
Bk. of S. Abut.	103+46.75	64.06	417.97	417.99

EAST EDGE OF SHOULDER

Location	Station	Offset	Theoretical Grade Elevations	Theoretical Grade Elevations Adjusted For Grinding
N. End of Appr. Slab	101+64.25	-66.00	417.93	417.95
A1	101+74.25	-66.00	417.93	417.95
A2	101+84.25	-66.00	417.93	417.95
S. End of Appr. Slab	101+94.25	-66.00	417.93	417.95

EAST EDGE OF PAVEMENT

Location	Station	Offset	Theoretical Grade Elevations	Theoretical Grade Elevations Adjusted For Grinding
N. End of Appr. Slab	101+64.25	-54.00	418.17	418.19
A1	101+74.25	-54.00	418.17	418.19
A2	101+84.25	-54.00	418.17	418.19
S. End of Appr. Slab	101+94.25	-54.00	418.17	418.19

℄ ROADWAY (N.B.)

Location	Station	Offset	Theoretical Grade Elevations	Theoretical Grade Elevations Adjusted For Grinding
N. End of Appr. Slab	101+64.25	-42.00	418.35	418.37
A1	101+74.25	-42.00	418.35	418.37
A2	101+84.25	-42.00	418.35	418.37
S. End of Appr. Slab	101+94.25	-42.00	418.35	418.37

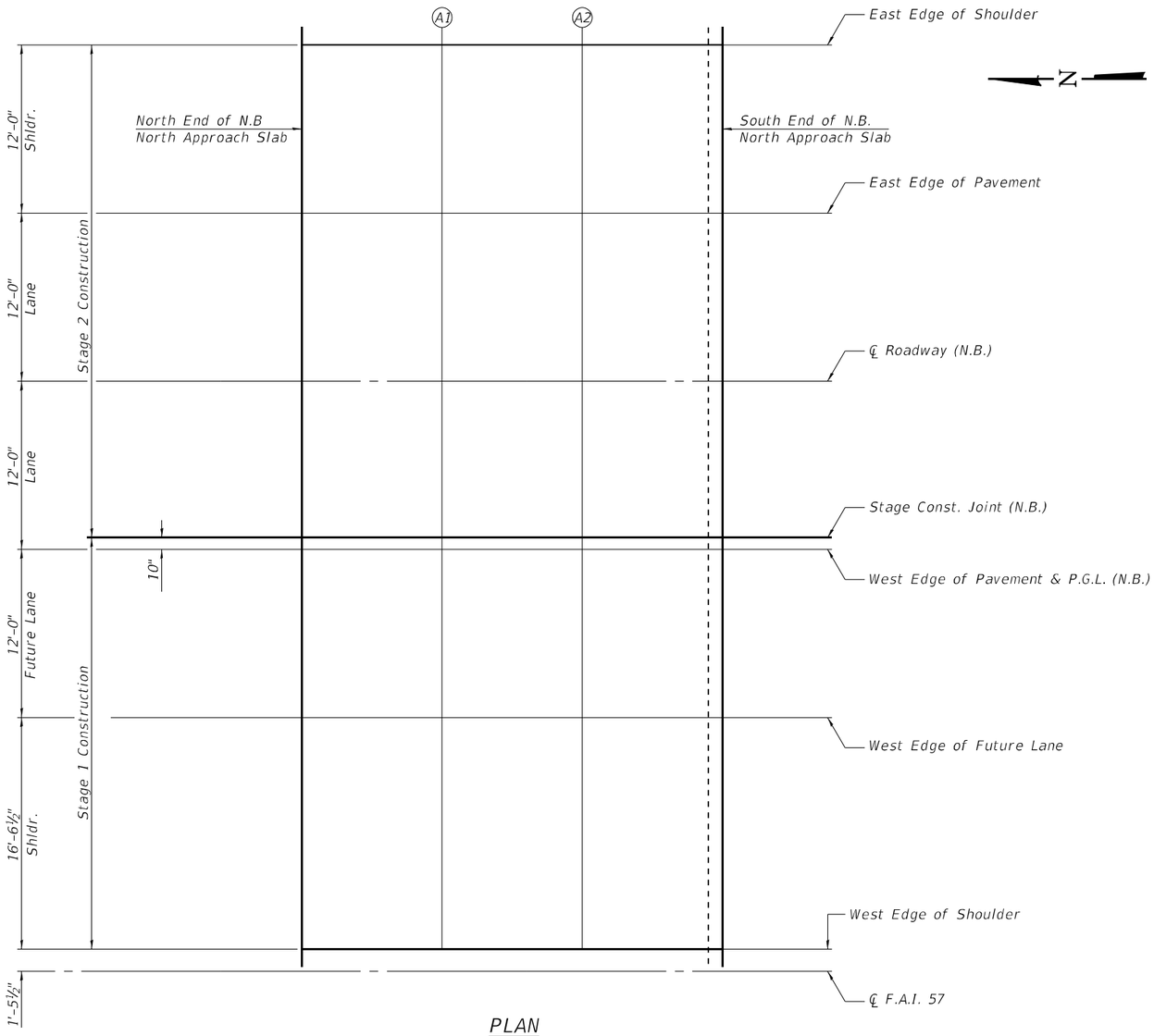

PLAN

STAGE CONSTRUCTION JOINT (N.B.)

Location	Station	Offset	Theoretical Grade Elevations	Theoretical Grade Elevations Adjusted For Grinding
N. End of Appr. Slab	101+64.25	-30.83	418.18	418.20
A1	101+74.25	-30.83	418.18	418.20
A2	101+84.25	-30.83	418.18	418.20
S. End of Appr. Slab	101+94.25	-30.83	418.18	418.20

WEST EDGE OF PAVEMENT & P.G.L. (N.B.)

Location	Station	Offset	Theoretical Grade Elevations	Theoretical Grade Elevations Adjusted For Grinding
N. End of Appr. Slab	101+64.25	-30.00	418.17	418.19
A1	101+74.25	-30.00	418.17	418.19
A2	101+84.25	-30.00	418.17	418.19
S. End of Appr. Slab	101+94.25	-30.00	418.17	418.19

WEST EDGE OF FUTURE LANE

Location	Station	Offset	Theoretical Grade Elevations	Theoretical Grade Elevations Adjusted For Grinding
N. End of Appr. Slab	101+64.25	-18.00	417.93	417.95
A1	101+74.25	-18.00	417.93	417.95
A2	101+84.25	-18.00	417.93	417.95
S. End of Appr. Slab	101+94.25	-18.00	417.93	417.95

WEST EDGE OF SHOULDER

Location	Station	Offset	Theoretical Grade Elevations	Theoretical Grade Elevations Adjusted For Grinding
N. End of Appr. Slab	101+64.25	-1.46	417.60	417.62
A1	101+74.25	-1.46	417.60	417.62
A2	101+84.25	-1.46	417.60	417.62
S. End of Appr. Slab	101+94.25	-1.46	417.60	417.62

EAST EDGE OF SHOULDER

Location	Station	Offset	Theoretical Grade Elevations	Theoretical Grade Elevations Adjusted For Grinding
N. End of Appr. Slab	103+45.75	-66.00	417.93	417.95
A3	103+55.75	-66.00	417.93	417.95
A4	103+65.75	-66.00	417.93	417.95
S. End of Appr. Slab	103+75.75	-66.00	417.93	417.95

EAST EDGE OF PAVEMENT

Location	Station	Offset	Theoretical Grade Elevations	Theoretical Grade Elevations Adjusted For Grinding
N. End of Appr. Slab	103+45.75	-54.00	418.17	418.19
A3	103+55.75	-54.00	418.17	418.19
A4	103+65.75	-54.00	418.17	418.19
S. End of Appr. Slab	103+75.75	-54.00	418.17	418.19

℄ ROADWAY (N.B.)

Location	Station	Offset	Theoretical Grade Elevations	Theoretical Grade Elevations Adjusted For Grinding
N. End of Appr. Slab	103+45.75	-42.00	418.35	418.37
A3	103+55.75	-42.00	418.35	418.37
A4	103+65.75	-42.00	418.35	418.37
S. End of Appr. Slab	103+75.75	-42.00	418.35	418.37

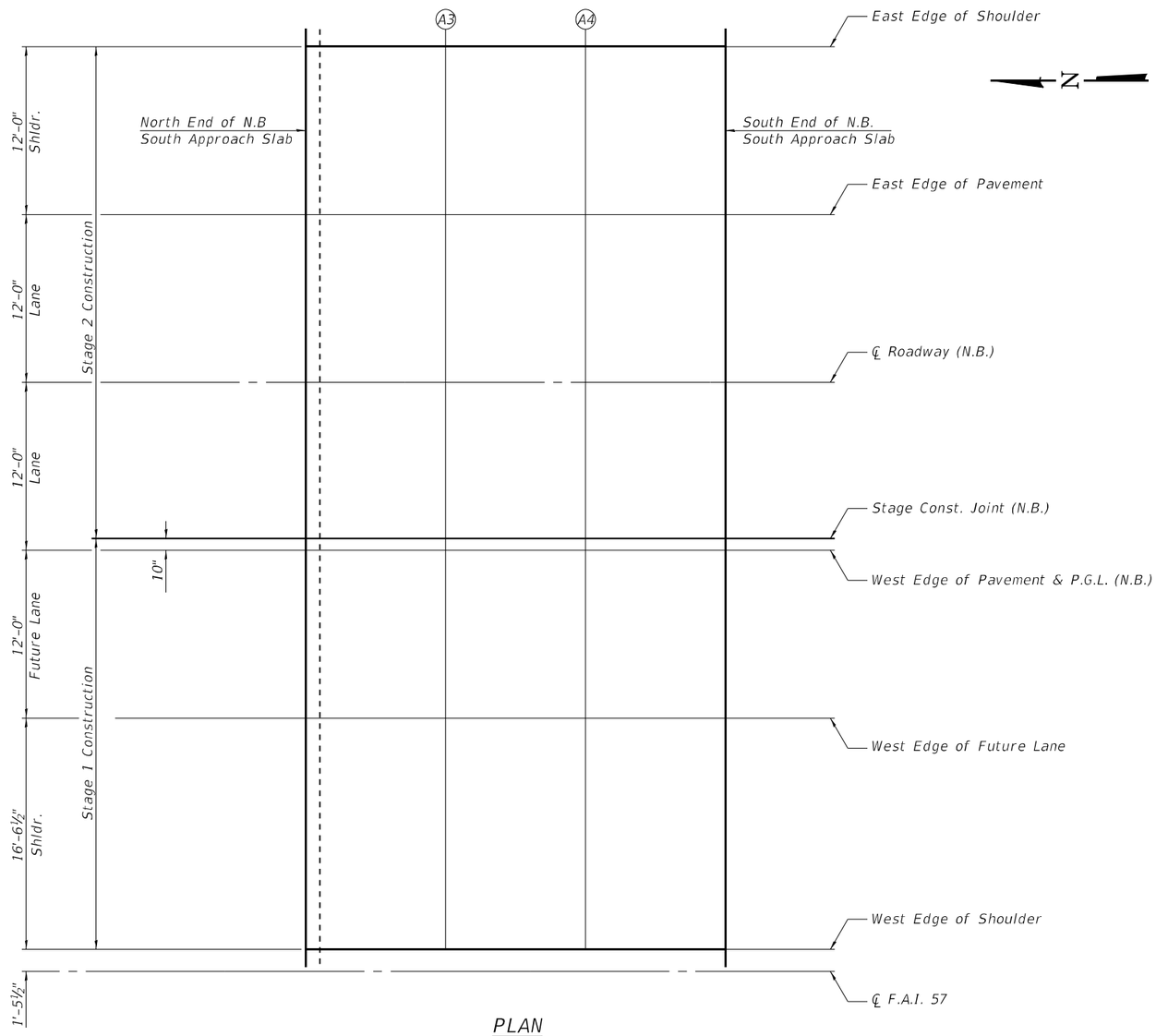

PLAN

STAGE CONSTRUCTION JOINT (N.B.)

Location	Station	Offset	Theoretical Grade Elevations	Theoretical Grade Elevations Adjusted For Grinding
N. End of Appr. Slab	103+45.75	-30.83	418.18	418.20
A3	103+55.75	-30.83	418.18	418.20
A4	103+65.75	-30.83	418.18	418.20
S. End of Appr. Slab	103+75.75	-30.83	418.18	418.20

WEST EDGE OF PAVEMENT & P.G.L. (N.B.)

Location	Station	Offset	Theoretical Grade Elevations	Theoretical Grade Elevations Adjusted For Grinding
N. End of Appr. Slab	103+45.75	-30.00	418.17	418.19
A3	103+55.75	-30.00	418.17	418.19
A4	103+65.75	-30.00	418.17	418.19
S. End of Appr. Slab	103+75.75	-30.00	418.17	418.19

WEST EDGE OF FUTURE LANE

Location	Station	Offset	Theoretical Grade Elevations	Theoretical Grade Elevations Adjusted For Grinding
N. End of Appr. Slab	103+45.75	-18.00	417.93	417.95
A3	103+55.75	-18.00	417.93	417.95
A4	103+65.75	-18.00	417.93	417.95
S. End of Appr. Slab	103+75.75	-18.00	417.93	417.95

WEST EDGE OF SHOULDER

Location	Station	Offset	Theoretical Grade Elevations	Theoretical Grade Elevations Adjusted For Grinding
N. End of Appr. Slab	103+45.75	-1.46	417.60	417.62
A3	103+55.75	-1.46	417.60	417.62
A4	103+65.75	-1.46	417.60	417.62
S. End of Appr. Slab	103+75.75	-1.46	417.60	417.62

EAST EDGE OF SHOULDER

Location	Station	Offset	Theoretical Grade Elevations	Theoretical Grade Elevations Adjusted For Grinding
N. End of Appr. Slab	101+64.25	1.46	417.60	417.62
A1	101+74.25	1.46	417.60	417.62
A2	101+84.25	1.46	417.60	417.62
S. End of Appr. Slab	101+94.25	1.46	417.60	417.62

EAST EDGE OF FUTURE LANE

Location	Station	Offset	Theoretical Grade Elevations	Theoretical Grade Elevations Adjusted For Grinding
N. End of Appr. Slab	101+64.25	18.00	417.93	417.95
A1	101+74.25	18.00	417.93	417.95
A2	101+84.25	18.00	417.93	417.95
S. End of Appr. Slab	101+94.25	18.00	417.93	417.95

EAST EDGE OF PAVEMENT & P.G.L. (S.B.)

Location	Station	Offset	Theoretical Grade Elevations	Theoretical Grade Elevations Adjusted For Grinding
N. End of Appr. Slab	101+64.25	30.00	418.17	418.19
A1	101+74.25	30.00	418.17	418.19
A2	101+84.25	30.00	418.17	418.19
S. End of Appr. Slab	101+94.25	30.00	418.17	418.19

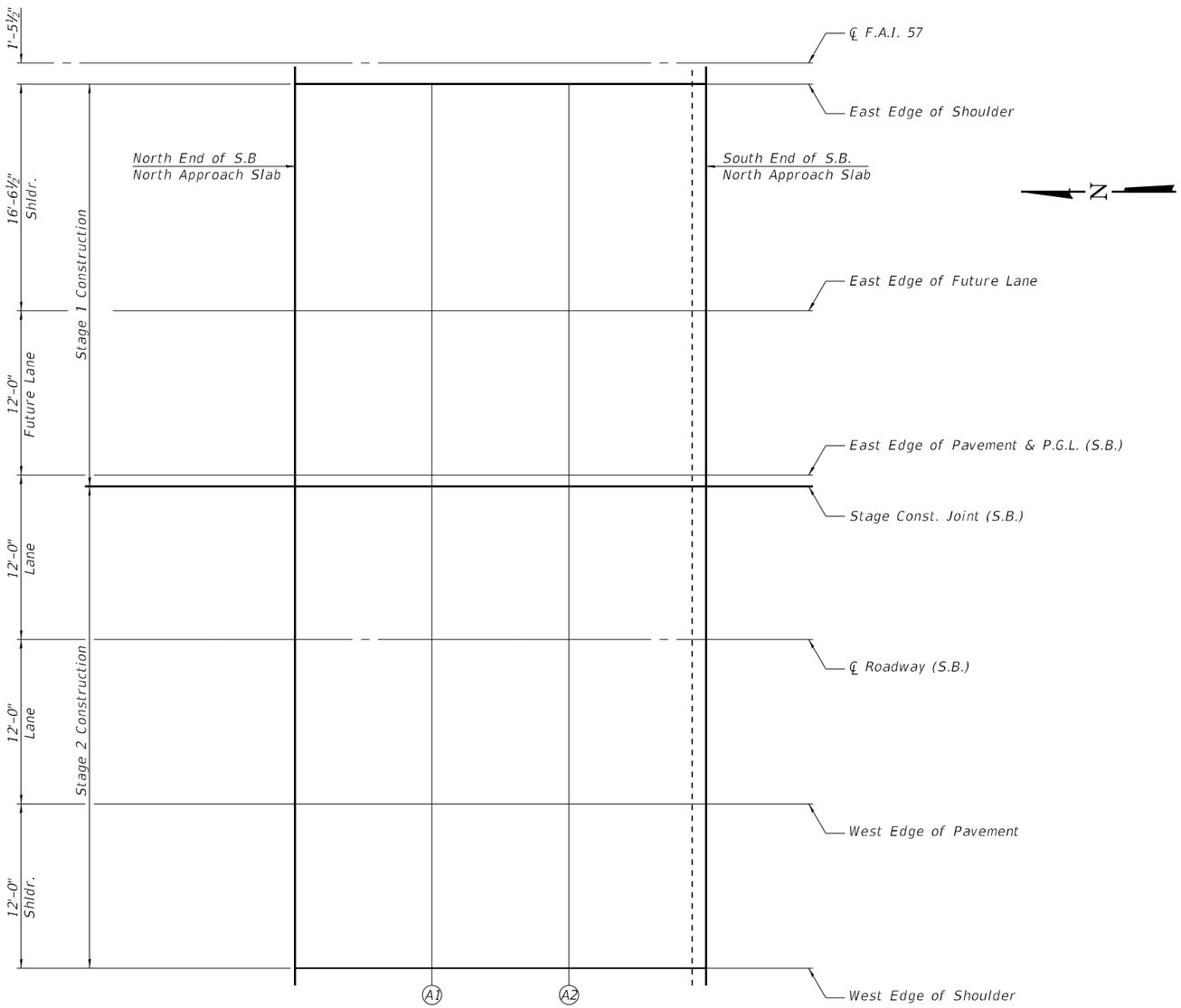

PLAN

STAGE CONSTRUCTION JOINT (S.B.)

Location	Station	Offset	Theoretical Grade Elevations	Theoretical Grade Elevations Adjusted For Grinding
N. End of Appr. Slab	101+64.25	30.83	418.18	418.20
A1	101+74.25	30.83	418.18	418.20
A2	101+84.25	30.83	418.18	418.20
S. End of Appr. Slab	101+94.25	30.83	418.18	418.20

℄ ROADWAY (S.B.)

Location	Station	Offset	Theoretical Grade Elevations	Theoretical Grade Elevations Adjusted For Grinding
N. End of Appr. Slab	101+64.25	42.00	418.35	418.37
A1	101+74.25	42.00	418.35	418.37
A2	101+84.25	42.00	418.35	418.37
S. End of Appr. Slab	101+94.25	42.00	418.35	418.37

WEST EDGE OF PAVEMENT

Location	Station	Offset	Theoretical Grade Elevations	Theoretical Grade Elevations Adjusted For Grinding
N. End of Appr. Slab	101+64.25	54.00	418.17	418.19
A1	101+74.25	54.00	418.17	418.19
A2	101+84.25	54.00	418.17	418.19
S. End of Appr. Slab	101+94.25	54.00	418.17	418.19

WEST EDGE OF SHOULDER

Location	Station	Offset	Theoretical Grade Elevations	Theoretical Grade Elevations Adjusted For Grinding
N. End of Appr. Slab	101+64.25	66.00	417.93	417.95
A1	101+74.25	66.00	417.93	417.95
A2	101+84.25	66.00	417.93	417.95
S. End of Appr. Slab	101+94.25	66.00	417.93	417.95

EAST EDGE OF SHOULDER

Location	Station	Offset	Theoretical Grade Elevations	Theoretical Grade Elevations Adjusted For Grinding
N. End of Appr. Slab	103+45.75	1.46	417.60	417.62
A3	103+55.75	1.46	417.60	417.62
A4	103+65.75	1.46	417.60	417.62
S. End of Appr. Slab	103+75.75	1.46	417.60	417.62

EAST EDGE OF FUTURE LANE

Location	Station	Offset	Theoretical Grade Elevations	Theoretical Grade Elevations Adjusted For Grinding
N. End of Appr. Slab	103+45.75	18.00	417.93	417.95
A3	103+55.75	18.00	417.93	417.95
A4	103+65.75	18.00	417.93	417.95
S. End of Appr. Slab	103+75.75	18.00	417.93	417.95

EAST EDGE OF PAVEMENT & P.G.L. (S.B.)

Location	Station	Offset	Theoretical Grade Elevations	Theoretical Grade Elevations Adjusted For Grinding
N. End of Appr. Slab	103+45.75	30.00	418.17	418.19
A3	103+55.75	30.00	418.17	418.19
A4	103+65.75	30.00	418.17	418.19
S. End of Appr. Slab	103+75.75	30.00	418.17	418.19

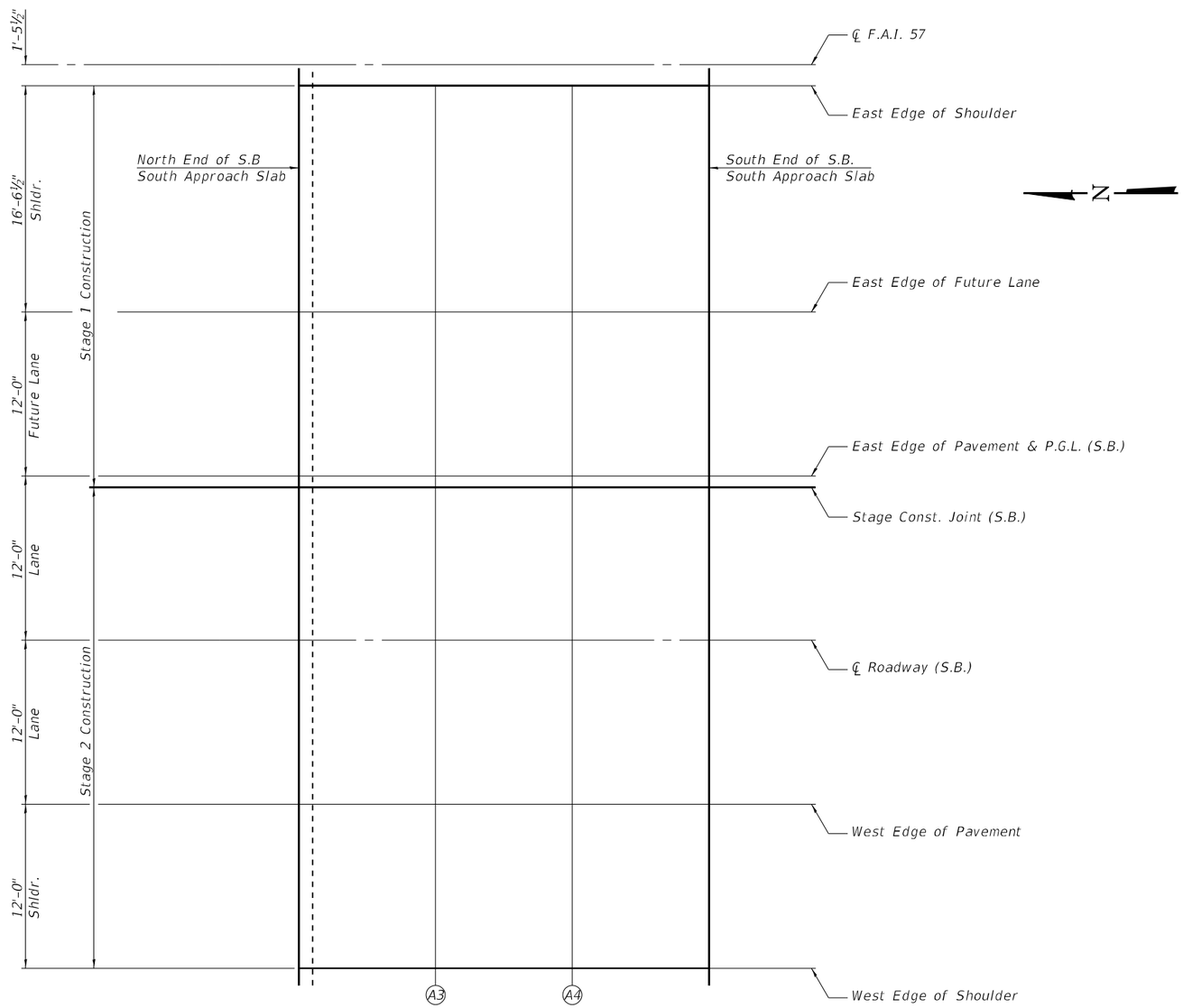

PLAN

STAGE CONSTRUCTION JOINT (S.B.)

Location	Station	Offset	Theoretical Grade Elevations	Theoretical Grade Elevations Adjusted For Grinding
N. End of Appr. Slab	103+45.75	30.83	418.18	418.20
A3	103+55.75	30.83	418.18	418.20
A4	103+65.75	30.83	418.18	418.20
S. End of Appr. Slab	103+75.75	30.83	418.18	418.20

℄ ROADWAY (S.B.)

Location	Station	Offset	Theoretical Grade Elevations	Theoretical Grade Elevations Adjusted For Grinding
N. End of Appr. Slab	103+45.75	42.00	418.35	418.37
A3	103+55.75	42.00	418.35	418.37
A4	103+65.75	42.00	418.35	418.37
S. End of Appr. Slab	103+75.75	42.00	418.35	418.37

WEST EDGE OF PAVEMENT

Location	Station	Offset	Theoretical Grade Elevations	Theoretical Grade Elevations Adjusted For Grinding
N. End of Appr. Slab	103+45.75	54.00	418.17	418.19
A3	103+55.75	54.00	418.17	418.19
A4	103+65.75	54.00	418.17	418.19
S. End of Appr. Slab	103+75.75	54.00	418.17	418.19

WEST EDGE OF SHOULDER

Location	Station	Offset	Theoretical Grade Elevations	Theoretical Grade Elevations Adjusted For Grinding
N. End of Appr. Slab	103+45.75	66.00	417.93	417.95
A3	103+55.75	66.00	417.93	417.95
A4	103+65.75	66.00	417.93	417.95
S. End of Appr. Slab	103+75.75	66.00	417.93	417.95

Notes:
1. For Section A-A, see sheet 20 of 39.
2. See sheets 18 & 19 of 39 for Superstructure Details and Bill of Material.
3. Bars indicated thus 65 x 6-#5 etc. indicates 65 lines of bars with 6 lengths per line.
4. For details of Bar Splicers, see sheet 36 of 39.
5. For location of floor drains, see sheet 1 of 39.
6. Prior to grinding
7. After grinding

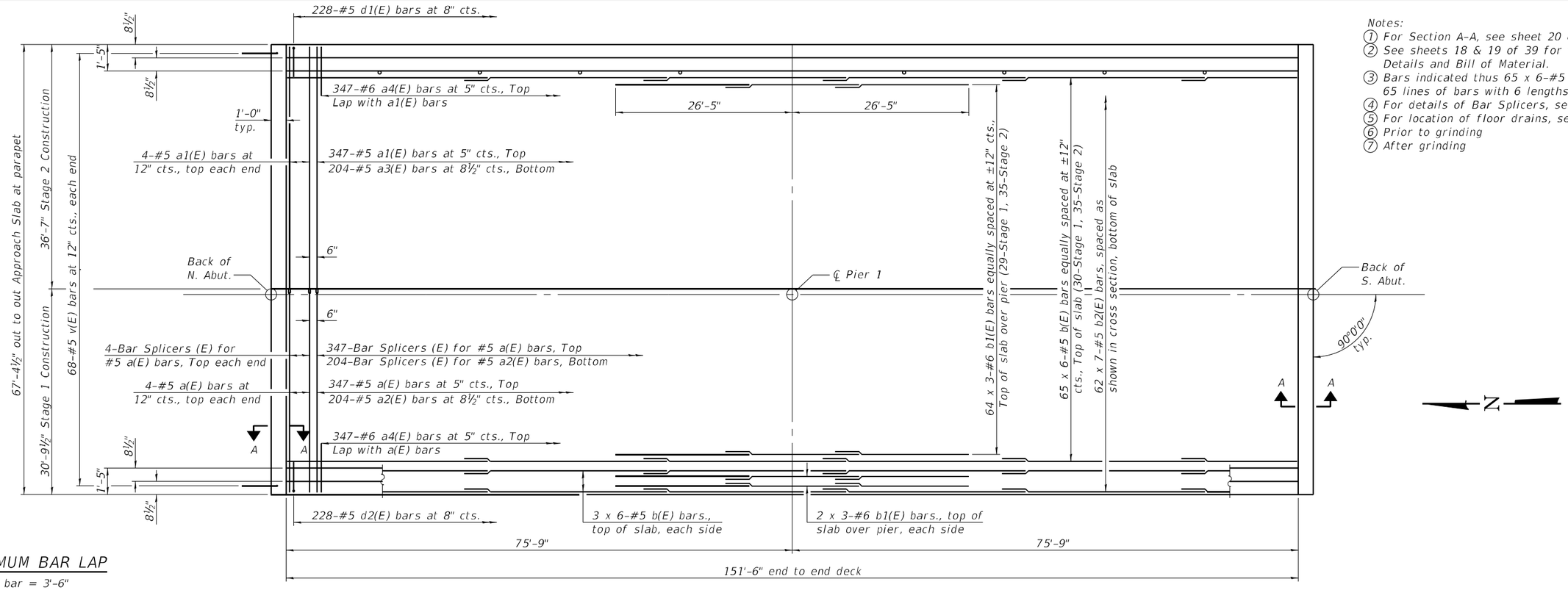

MINIMUM BAR LAP

#5 bar = 3'-6"
#6 bar = 3'-7"

PLAN

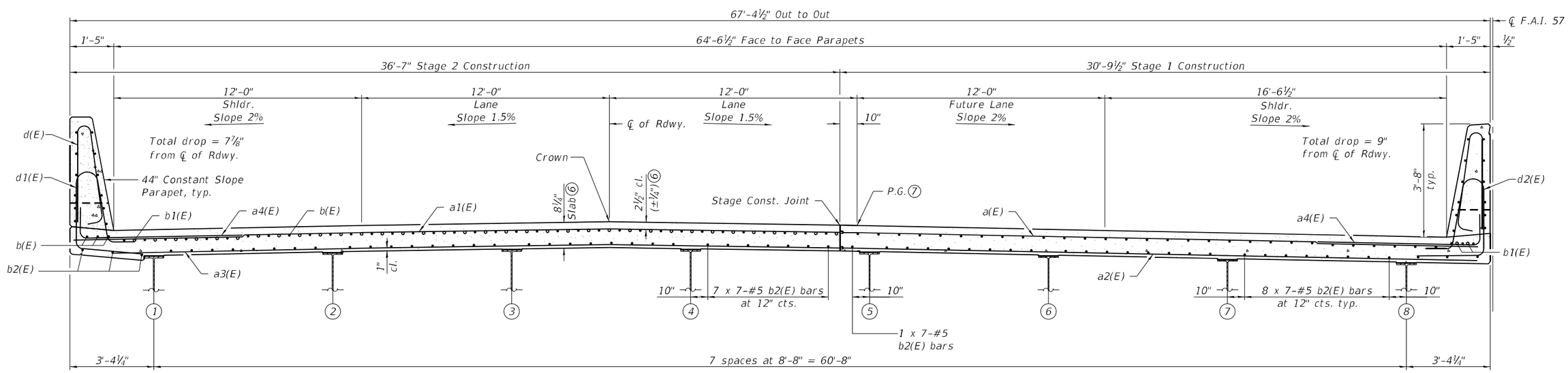

CROSS SECTION

(Looking south)

FILE NAME: H:\P222064 - IDOT PTB 203 Item 49 District 9 V:\v\222064.011 - 157 over Gun\Microstation\0280093_0094-78884-016-Superstructure-N.B..dgn

OATES ASSOCIATES www.oatesassociates.com ILLINOIS DESIGN FIRM LICENSE NO.: 184.001115	USER NAME =	DESIGNED - ORG	REVISED -	STATE OF ILLINOIS DEPARTMENT OF TRANSPORTATION	SUPERSTRUCTURE STRUCTURE NO. 028-0093 (N.B.)
		CHECKED - KBC	REVISED -		
	PLOT SCALE =	DRAWN - ORG	REVISED -		
	PLOT DATE = 12/13/2024	CHECKED - KBC	REVISED -		SHEET 16 OF 39 SHEETS

F.A.I. RTE.	SECTION	COUNTY	TOTAL SHEETS	SHEET NO.
57	(28-1)B-2	FRANKLIN	598	317
		CONTRACT NO. 78884		
		ILLINOIS	FED. AID PROJECT	

Notes:
1. For Section A-A, see sheet 20 of 39.
2. See sheet 18 & 19 of 39 for Superstructure Details and Bill of Material.
3. Bars indicated thus 65 x 6-#5 etc. indicates 65 lines of bars with 6 lengths per line.
4. For details of Bar Splicers, see sheet 36 of 39.
5. For location of floor drains, see sheet 1 of 39.
6. Prior to grinding
7. After grinding

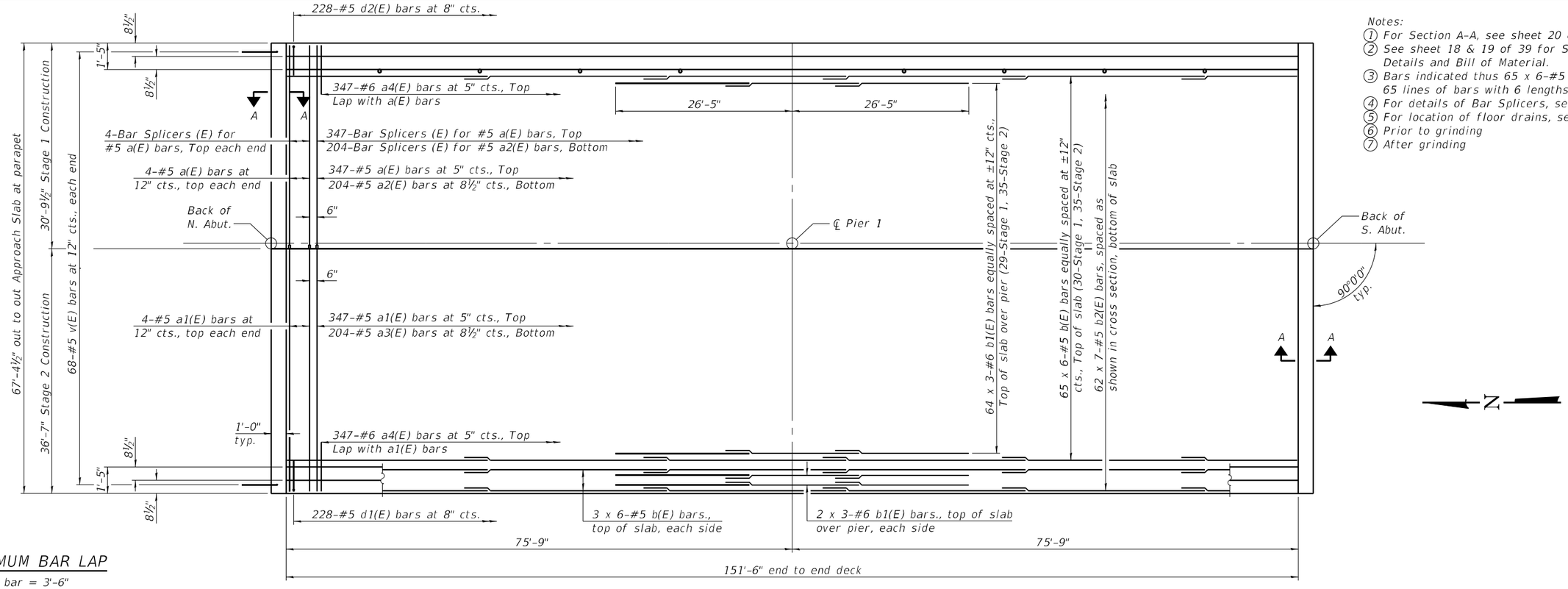

MINIMUM BAR LAP

#5 bar = 3'-6"
#6 bar = 3'-7"

PLAN

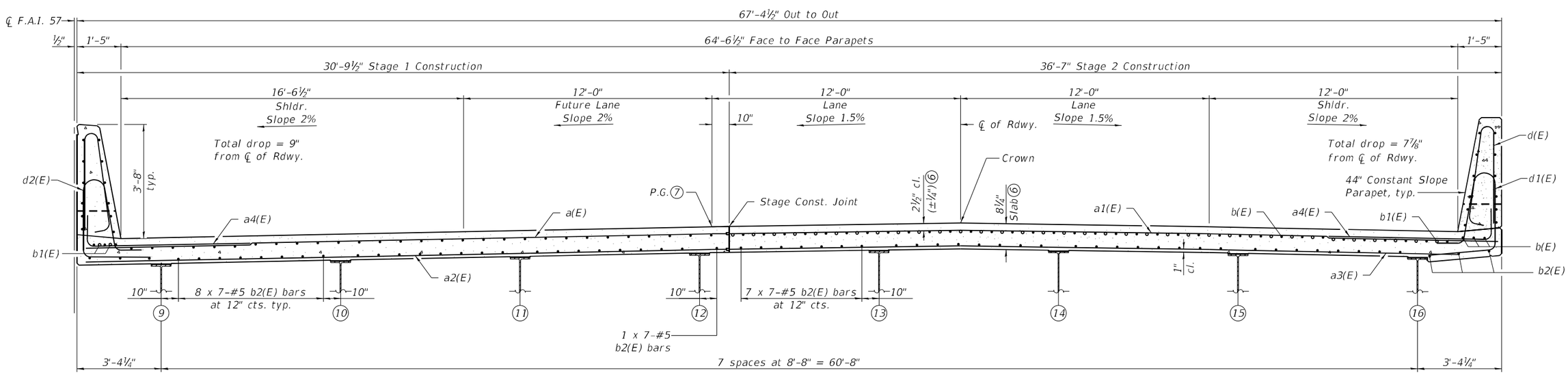

NEAR PIER

NEAR MIDSPAN

CROSS SECTION

(Looking south)

OATES ASSOCIATES www.oatesassociates.com ILLINOIS DESIGN FIRM LICENSE NO.: 184.001115	USER NAME =	DESIGNED - ORG	REVISED -
		CHECKED - KBC	REVISED -
	PLOT SCALE =	DRAWN - ORG	REVISED -
	PLOT DATE = 12/13/2024	CHECKED - KBC	REVISED -

STATE OF ILLINOIS
DEPARTMENT OF TRANSPORTATION

SUPERSTRUCTURE
STRUCTURE NO. 028-0094 (S.B.)

SHEET 17 OF 39 SHEETS

F.A.I. RTE.	SECTION	COUNTY	TOTAL SHEETS	SHEET NO.
57	(28-1)B-2	FRANKLIN	598	318
		CONTRACT NO. 78884		
		ILLINOIS	FED. AID PROJECT	

FILE NAME: H:\P\222064 - IDOT PTB 203 Item 49 District 9 V-x\/222064.011 - 157 over Gun\Microstation\0280093_0094-78884-017-Superstructure-S.B..dgn

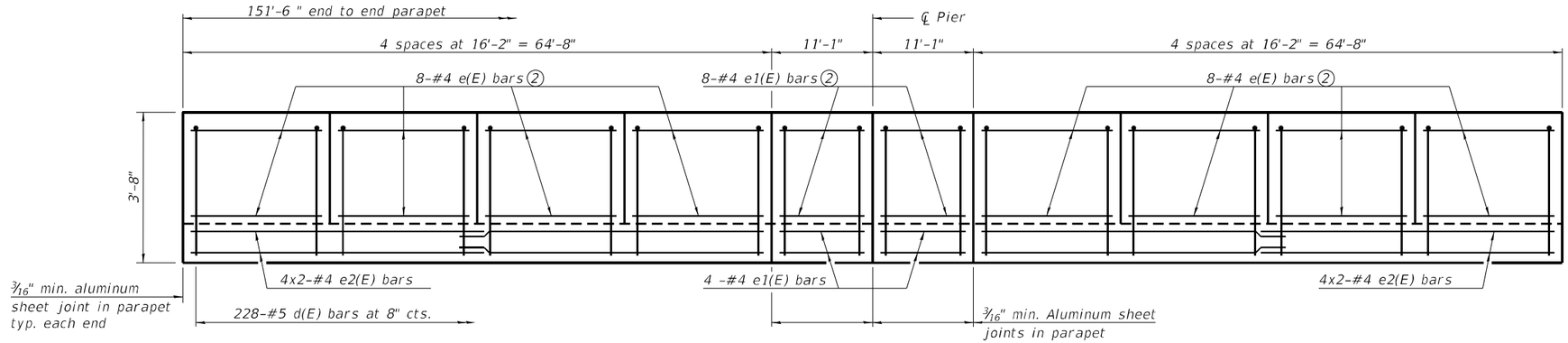

INSIDE ELEVATION OF WEST PARAPET - NORTHBOUND

(Southbound East Parapet Similar)

Notes:

1. Bars indicated thus 4 x 2-#4 etc. indicates 4 lines of bars with 2 lengths per line.
2. See Section Thru Parapet on sheet 19 of 39.
3. The 3/16" aluminum sheet shall be ASTM B 209 alloy 3003-H14 and coated with 5 mils of either bitumen paint or epoxy paint to minimize reaction with wet concrete. Cost included with Concrete Superstructure.
4. The polyurethane sealant shall be according to Article 1050.04 of the Std. Spec. and the color shall be gray.

MINIMUM BAR LAP

#4 bar = 2'-5"

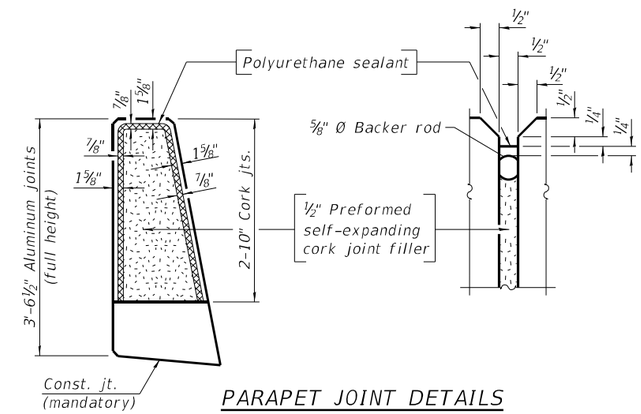

PARAPET JOINT DETAILS

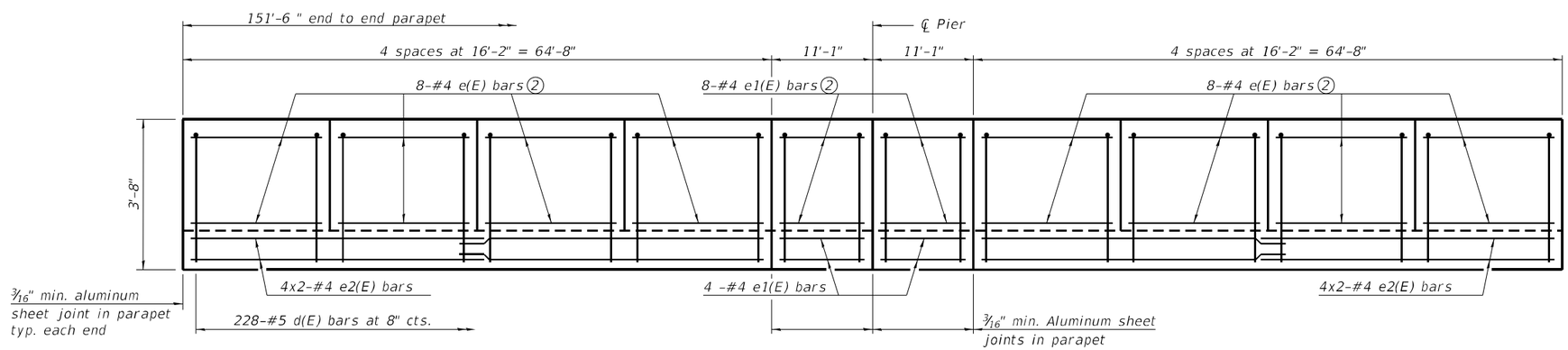

INSIDE ELEVATION OF EAST PARAPET - NORTHBOUND

(Southbound West Parapet Similar)

FILE NAME: H:\P222064 - IDOT PTB 203 Item 49 District 9 V-x\V2220064.011 - I57 over Gun\Microstation\0280093_0094-78884-018-Superstructure Details.dgn

OATES ASSOCIATES www.oatesassociates.com ILLINOIS DESIGN FIRM LICENSE NO.: 184.001115	USER NAME =	DESIGNED - ORG	REVISED -	STATE OF ILLINOIS DEPARTMENT OF TRANSPORTATION	SUPERSTRUCTURE DETAILS STRUCTURE NO. 028-0093 (N.B.) & 028-0094 (S.B.)	F.A.I. RTE.	SECTION	COUNTY	TOTAL SHEETS / SHEET NO.
		CHECKED - KBC	REVISED -			57	(28-1)B-2	FRANKLIN	598 / 319
	PLOT SCALE =	DRAWN - ORG	REVISED -					CONTRACT NO. 78884	
	PLOT DATE = 12/13/2024	CHECKED - KBC	REVISED -		SHEET 18 OF 39 SHEETS		ILLINOIS	FED. AID PROJECT	

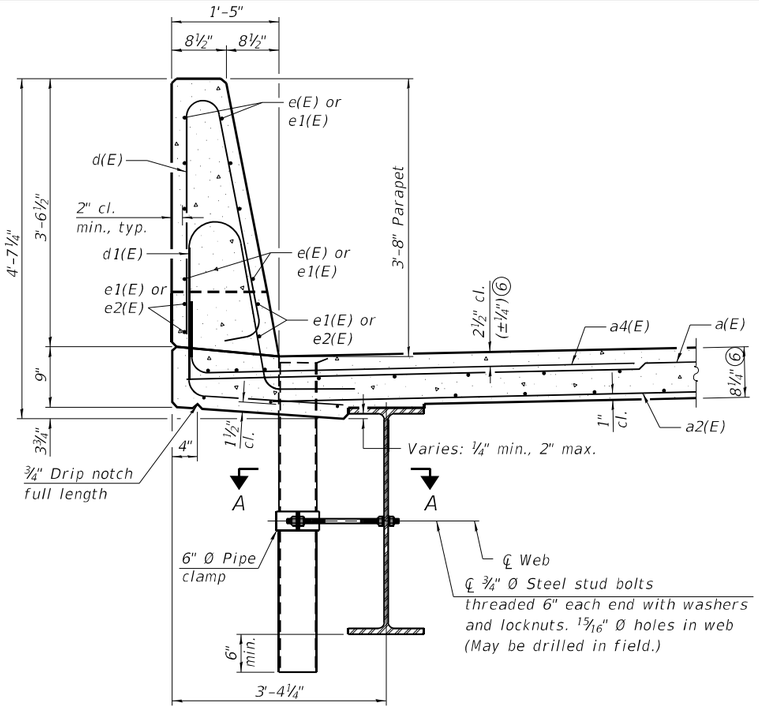

SECTION THRU EAST PARAPET - NORTHBOUND

(Southbound West Parapet Similar)

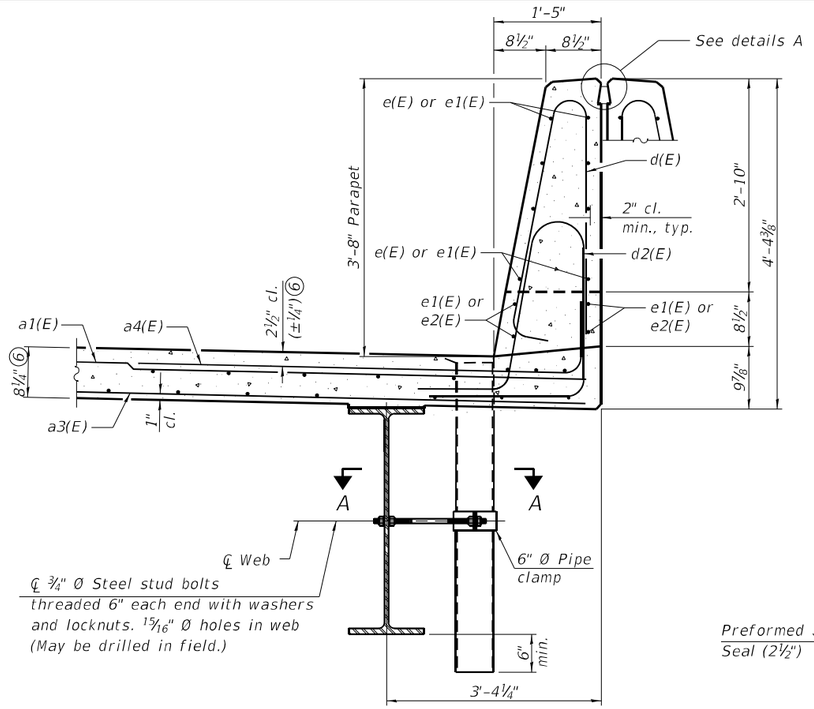

SECTION THRU WEST PARAPET - NORTHBOUND

(Southbound East Parapet Similar)

Notes:

1. Fiberglass pipe shall conform to ASTM D2996, with short-time rupture strength hoop tensile stress of 30,000 p.s.i. minimum.
2. The Inorganic Zinc Rich Primer / Acrylic / Acrylic Paint System shall be used for shop and field painting of the exterior surfaces of the floor drains according to Article 506. The color of the final finish coat shall be gray, Munsell No 5B 7/1. The exterior surfaces of the drains shall be cleaned according to the Society of Protective Coating's Spec. SSPC-SP1 prior to painting. Cost shall be included with Floor Drains.
3. The top portion of aluminum floor drains shall be coated with 5 mils of either bitumen paint or epoxy paint to minimize reaction with wet concrete.
4. The clamping device shall be galvanized according to AASHTO M 232. Cost of clamping device included with Floor Drains.
5. Bar terminators paid for separately. See Total Bill of Material.
6. Prior to Grinding

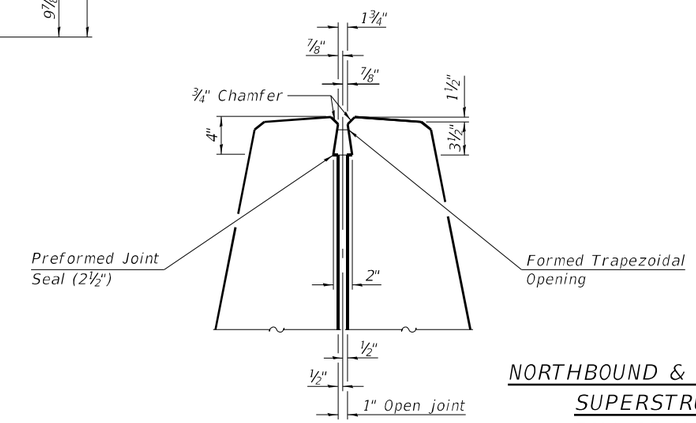

DETAIL A

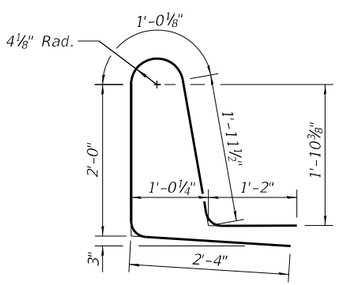

BAR d1(E)

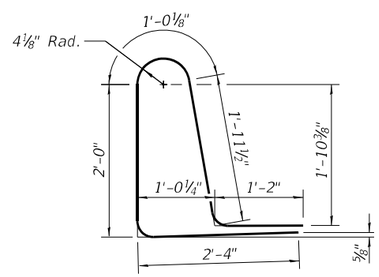

BAR d2(E)

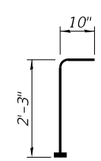

BAR v(E)

(Headed)

(272-#5 Bar Terminators)

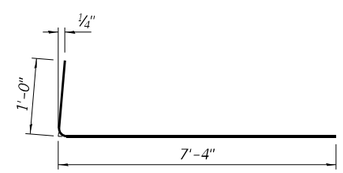

BAR a4(E)

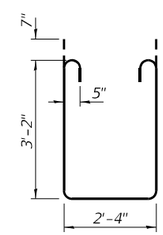

BAR s1(E)

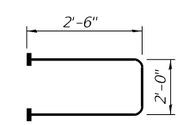

BAR s(E)

(Headed)

(496-#5 Bar Terminators)

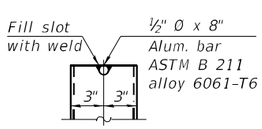

ALUMINUM TUBE

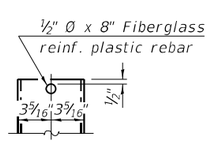

FIBERGLASS PIPE

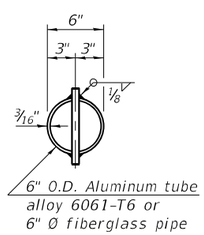

TOP PLAN

(Showing aluminum tube)

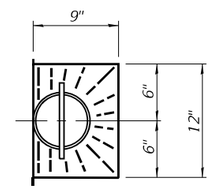

TOP PLAN

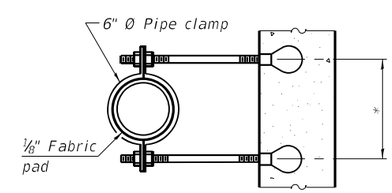

SECTION A-A

*Dimension as required by pipe clamp

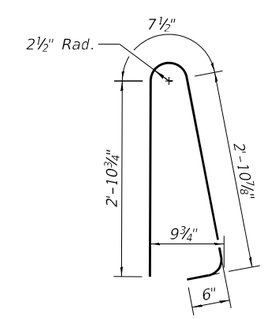

BAR d(E)

NORTHBOUND & SOUTHBOUND SUPERSTRUCTURE BILL OF MATERIAL

Bar	No.	Size	Length	Shape
a(E)	710	#5	30'-6"	
a1(E)	710	#5	36'-3"	
a2(E)	408	#5	30'-6"	
a3(E)	408	#5	35'-7"	
a4(E)	1,388	#6	8'-4"	
b(E)	852	#5	28'-2"	
b1(E)	408	#6	20'-0"	
b2(E)	868	#5	24'-7"	
d(E)	912	#5	7'-0"	
d1(E)	456	#5	8'-6"	
d2(E)	456	#5	8'-6"	
e(E)	256	#4	15'-10"	
e1(E)	96	#4	10'-9"	
e2(E)	64	#4	33'-7"	
m(E)	16	#6	30'-6"	
m1(E)	16	#6	36'-3"	
m2(E)	72	#6	8'-3"	
m3(E)	24	#6	3'-0"	
m4(E)	12	#6	6'-11"	
s(E)	248	#5	7'-0"	
s1(E)	248	#5	9'-10"	
v(E)	272	#5	3'-1"	
Reinforcement Bars, Epoxy Coated			Lbs.	182,000
Concrete Superstructure			Cu. Yds.	675.8

FILE NAME: H:\P\222064 - IDOT PTB 203 Item 49 District 9 V-V\222064.011 - I57 over Gun\Microsiation\0280093_0094-78884-019-Superstructure Details.dgn

OATES ASSOCIATES
www.oatesassociates.com
ILLINOIS DESIGN FIRM LICENSE NO.: 184.001115

USER NAME =	DESIGNED - ORG	REVISED -	
	CHECKED - KBC	REVISED -	
PLOT SCALE =	DRAWN - ORG	REVISED -	
PLOT DATE = 12/13/2024	CHECKED - KBC	REVISED -	

STATE OF ILLINOIS
DEPARTMENT OF TRANSPORTATION

SUPERSTRUCTURE DETAILS
STRUCTURE NO. 028-0093 (N.B.) & 028-0094 (S.B.)

SHEET 19 OF 39 SHEETS

F.A.I. RTE.	SECTION	COUNTY	TOTAL SHEETS	SHEET NO.
57	(28-1)B-2	FRANKLIN	598	320

CONTRACT NO. 78884

ILLINOIS | FED. AID PROJECT

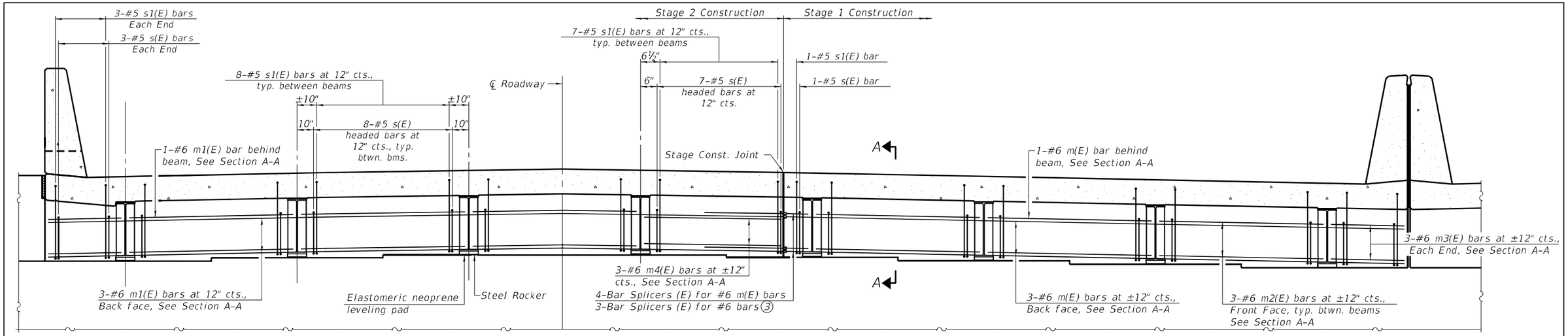

DIAPHRAGM AT ABUTMENT

(N.B. Looking South, South diaphragm, North diaphragm similar)
(S.B. Looking North, North diaphragm, South diaphragm similar)

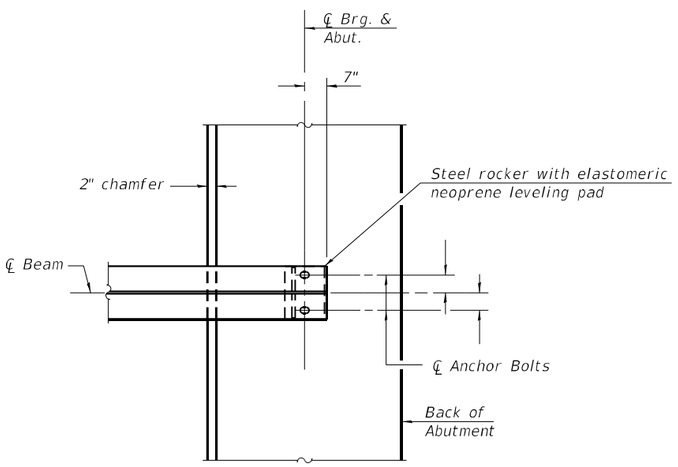

PLAN AT ABUTMENT

(Showing bottom flange of beam)

Notes:

1. See sheet 19 of 39 for superstructure details and Bill of Material.
2. See sheet 23 of 39 for PJF details.
3. Use Bar Splicers in place of m2(E) bars between beam and stage construction joint. Cut Bar Splicers as required to provide adequate clearance to beam.
4. For details of Bar Splicers, see sheet 36 of 39.
5. Control point elevations are taken at top of approach slab seat as shown in View B-B.
6. The approach slab seat shall have a constant slope between the control points shown.
7. For details of bars s(E) and s1(E), see sheet 19 of 39.
8. For bearing details, see sheet 27 of 39.
9. Prior to grinding.

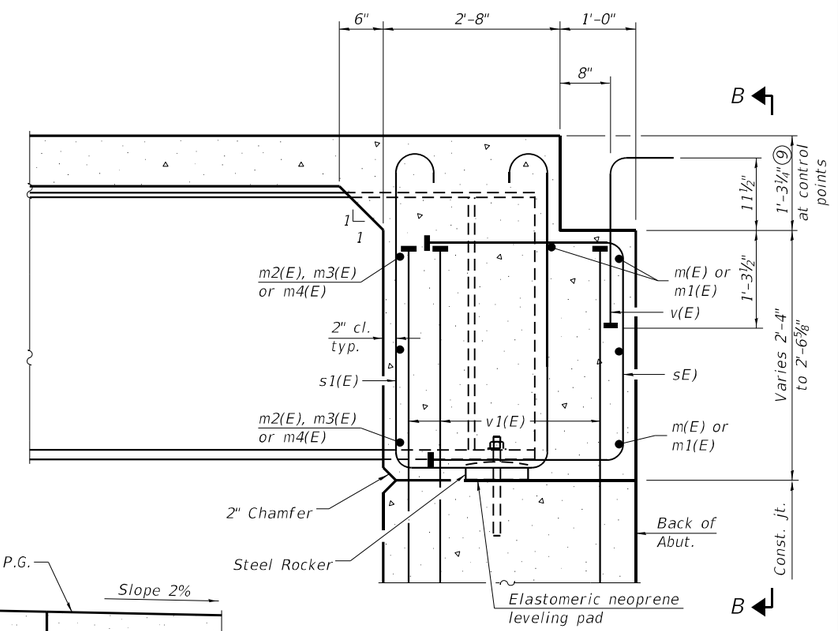

SECTION A-A

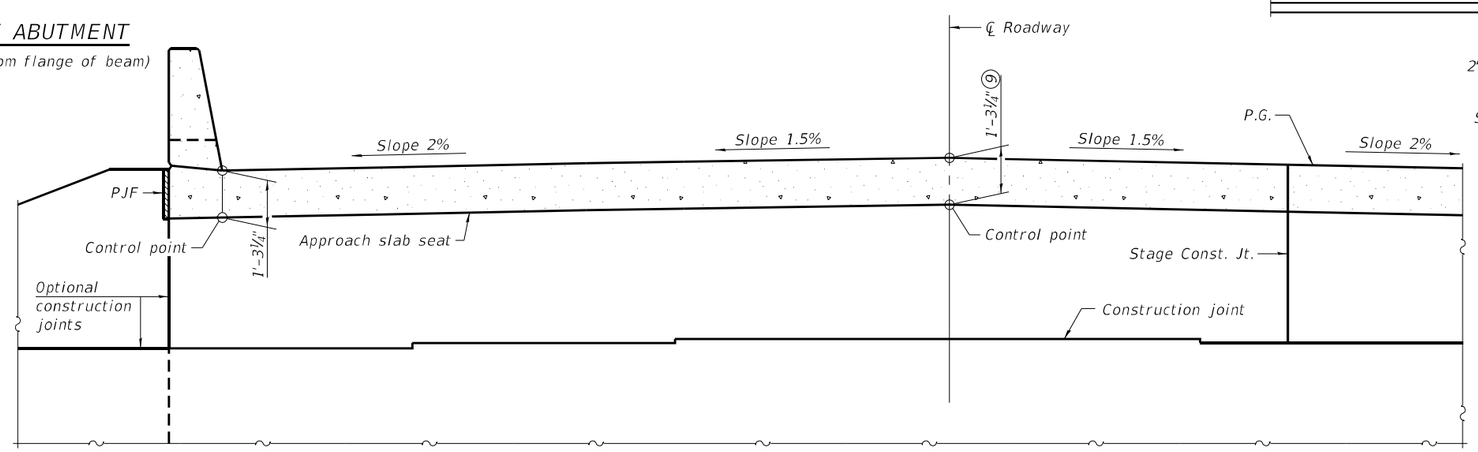

VIEW B-B

OATES ASSOCIATES www.oatesassociates.com ILLINOIS DESIGN FIRM LICENSE NO.: 184.001115	USER NAME =	DESIGNED - ORG	REVISED -	STATE OF ILLINOIS DEPARTMENT OF TRANSPORTATION	DIAPHRAGM DETAILS STRUCTURE NO. 028-0093 (N.B.) & 028-0094 (S.B.)	F.A.I. RTE.	SECTION	COUNTY	TOTAL SHEETS / SHEET NO.
		CHECKED - KBC	REVISED -			57	(28-1)B-2	FRANKLIN	598 / 321
	PLOT SCALE =	DRAWN - ORG	REVISED -			CONTRACT NO. 78884			
	PLOT DATE = 12/13/2024	CHECKED - KBC	REVISED -		SHEET 20 OF 39 SHEETS	ILLINOIS	FED. AID PROJECT		

FILE NAME: H:\P\222064 - IDOT PTB 203 Item 49 District 9 V:\v\222064.011 - I57 over Gun\Microstation\0280093_0094-78884-020-Abutment Diaphragm Details.dgn

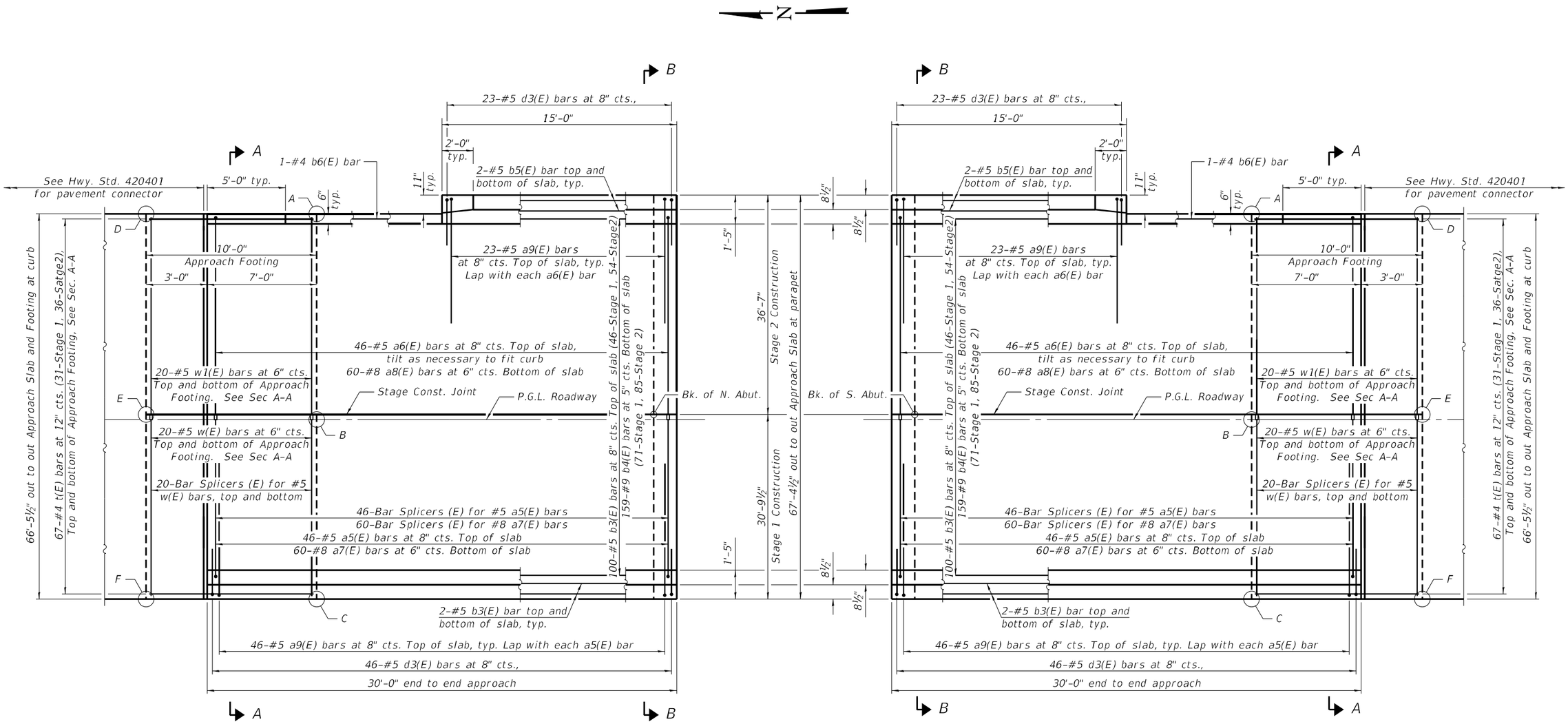

PLAN

Notes:
1. For Sections A-A and B-B, see sheet 23 of 39.
2. For details of Bar Splicers, see 36 of 39.

TOP AND BOTTOM ELEVATIONS FOR APPROACH FOOTING

	North Approach		South Approach	
Point	Top	Bottom	Top	Bottom
A	416.67	415.84	416.67	415.84
B	416.92	416.09	416.92	416.09
C	416.32	415.49	416.32	415.49
D	416.67	415.84	416.67	415.84
E	416.92	416.09	416.92	416.09
F	416.32	415.49	416.32	415.49

FILE NAME: H:\P\222064 - IDOT PTB 203 Item 49 District 9 V-V\222064.011 - I57 over Gun\Microstation\0280093_0094-78884-021-Bridge Approach Slab Details-N.B..dgn

OATES ASSOCIATES
www.oatesassociates.com
ILLINOIS DESIGN FIRM LICENSE NO.: 184.001115

USER NAME =	DESIGNED - ORG	REVISED -	
	CHECKED - KBC	REVISED -	
PLOT SCALE =	DRAWN - ORG	REVISED -	
PLOT DATE = 12/13/2024	CHECKED - KBC	REVISED -	

STATE OF ILLINOIS
DEPARTMENT OF TRANSPORTATION

BRIDGE APPROACH SLAB DETAILS
STRUCTURE NO. 028-0093 (N.B.)

SHEET 21 OF 39 SHEETS

F.A.I. RTE.	SECTION	COUNTY	TOTAL SHEETS	SHEET NO.
57	(28-1)B-2	FRANKLIN	598	322

CONTRACT NO. 78884

ILLINOIS | FED. AID PROJECT

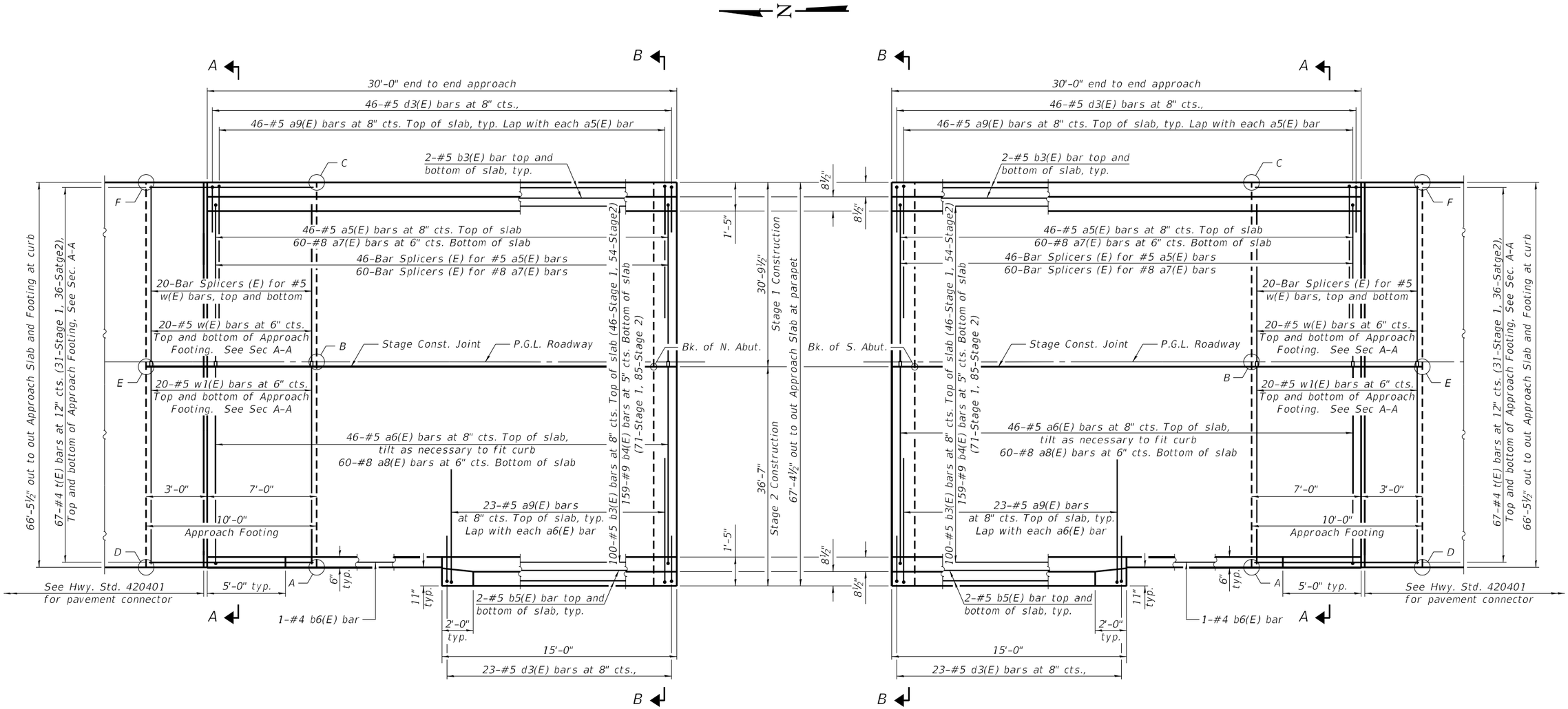

PLAN

Notes:
1. For Sections A-A and B-B, see sheet 23 of 39.
2. For details of Bar Splicers, see 36 of 39.

TOP AND BOTTOM ELEVATIONS FOR APPROACH FOOTING

	North Approach		South Approach	
Point	Top	Bottom	Top	Bottom
A	416.67	415.84	416.67	415.84
B	416.92	416.09	416.92	416.09
C	416.32	415.49	416.32	415.49
D	416.67	415.84	416.67	415.84
E	416.92	416.09	416.92	416.09
F	416.32	415.49	416.32	415.49

FILE NAME: H:\PK\222064 - IDOT PTB 203 Item 49 District 9 V-V\222064.011 - I57 over Gun\Microsiation\028093_0094-78884-022-Bridge Approach Slab Details-S.B.dgn

OATES ASSOCIATES
www.oatesassociates.com
ILLINOIS DESIGN FIRM LICENSE NO.: 184.001115

USER NAME =	DESIGNED - ORG	REVISED -	
	CHECKED - KBC	REVISED -	
PLOT SCALE =	DRAWN - ORG	REVISED -	
PLOT DATE = 12/13/2024	CHECKED - KBC	REVISED -	

STATE OF ILLINOIS
DEPARTMENT OF TRANSPORTATION

BRIDGE APPROACH SLAB DETAILS
STRUCTURE NO. 028-0094 (S.B.)

SHEET 22 OF 39 SHEETS

F.A.I. RTE.	SECTION	COUNTY	TOTAL SHEETS	SHEET NO.
57	(28-1)B-2	FRANKLIN	598	323

CONTRACT NO. 78884

ILLINOIS | FED. AID PROJECT

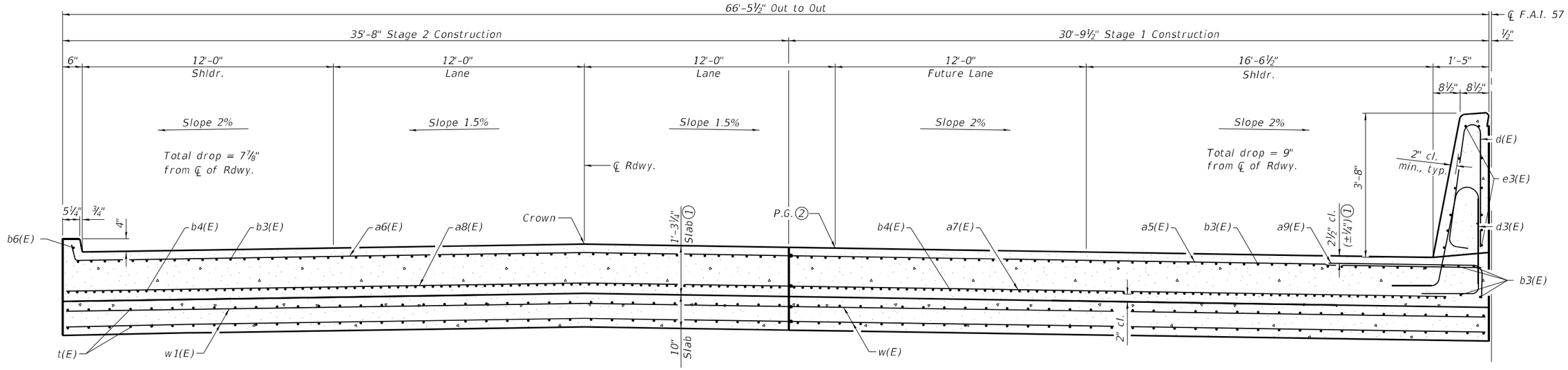

SECTION A-A

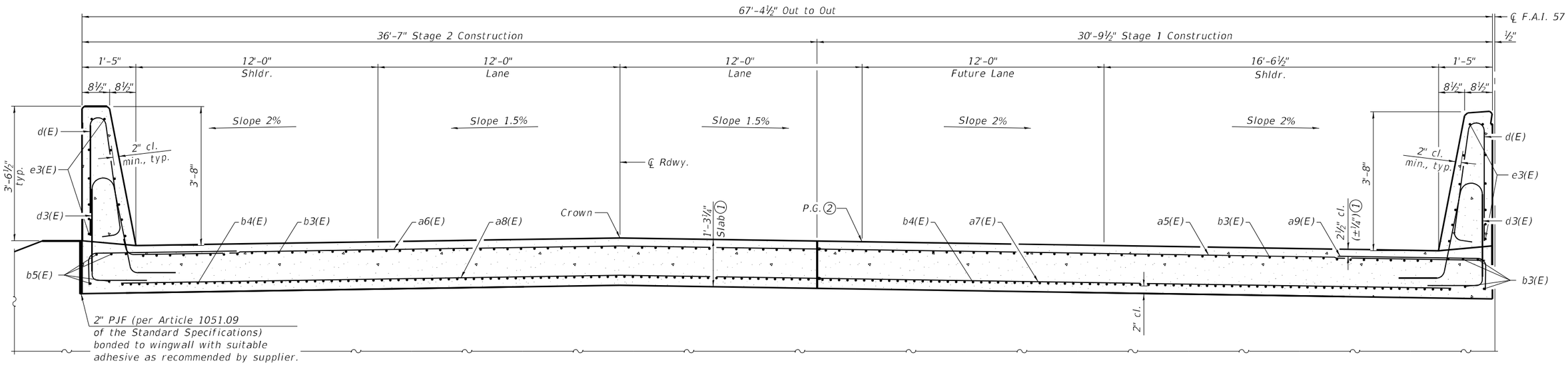

SECTION B-B

Notes:
① Prior to grinding.
② After grinding.

FILE NAME: H:\P\222064 - IDOT PTB 203 Item 49 District 9 V-\222064.011 - I57 over Gun\Microstation\0280093_0094-78884-023-Bridge Approach Slab Details.dgn

OATES ASSOCIATES
www.oatesassociates.com
ILLINOIS DESIGN FIRM LICENSE NO.: 184.001115

USER NAME =	DESIGNED - ORG	REVISED -	
	CHECKED - KBC	REVISED -	
PLOT SCALE =	DRAWN - ORG	REVISED -	
PLOT DATE = 12/13/2024	CHECKED - KBC	REVISED -	

STATE OF ILLINOIS
DEPARTMENT OF TRANSPORTATION

BRIDGE APPROACH SLAB DETAILS
STRUCTURE NO. 028-0093 (N.B.) & 028-0094 (S.B.)

SHEET 23 OF 39 SHEETS

F.A.I. RTE.	SECTION	COUNTY	TOTAL SHEETS	SHEET NO.
57	(28-1)B-2	FRANKLIN	598	324
		CONTRACT NO. 78884		
	ILLINOIS	FED. AID PROJECT		

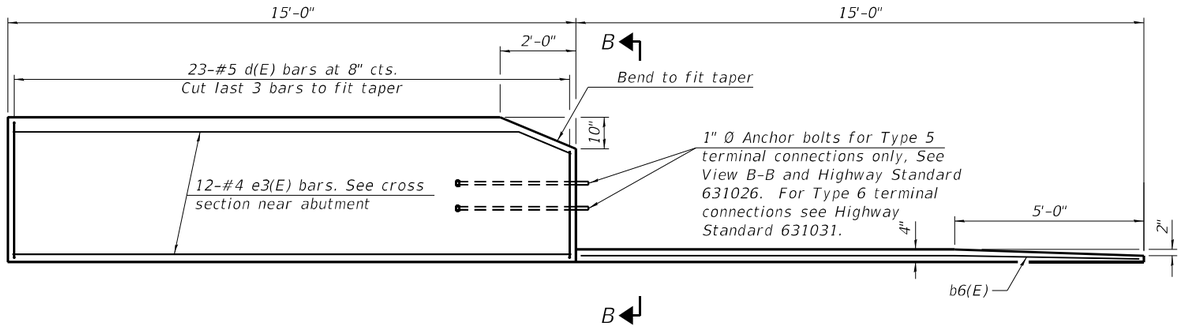

INSIDE ELEVATION OF PARAPET AND CURB

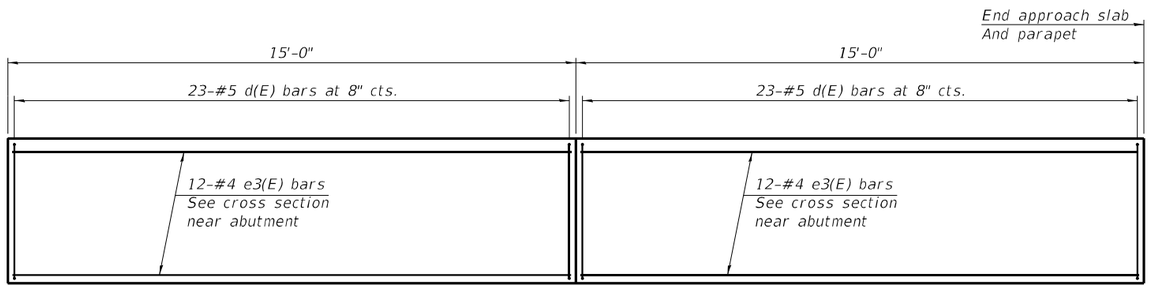

INSIDE ELEVATION OF MEDIAN

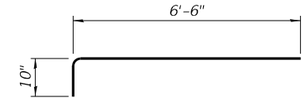

BAR a9(E)

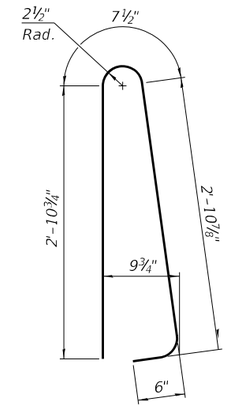

BAR d(E)

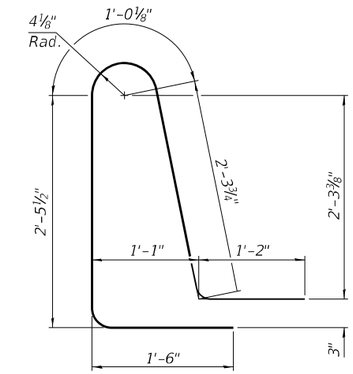

BAR d3(E)

Notes:

1. The joint opening shall be adjusted for temperature per Article 520.04 of the Standard Specifications. However, since this detail is for jointless structures, the length of bridge used to calculate the adjustment shall be equal to half the total bridge length plus the length of the bridge approach slab.
2. Parapet concrete shall be paid for as Concrete Superstructure.
3. Approach slab shall be paid for as Concrete Superstructure (Approach Slab).
4. Approach footing concrete shall be paid for as Concrete Structures.
5. The approach footing maximum applied service bearing pressure (Qmax) = 2.0 ksf.
6. Cost of excavation for approach footing included with Concrete Structures.
7. For Granular Backfill for Structures and drainage treatment details, see sheet 2 of 39.
8. Cost included with Concrete Superstructure (Approach Slab).
9. Per manufacturer recommendations.
10. Prior to grinding.
11. Calculated weight of Reinforcement Bars, Epoxy Coated = 14,450 (Substructure)
    138,980 (Superstructure)

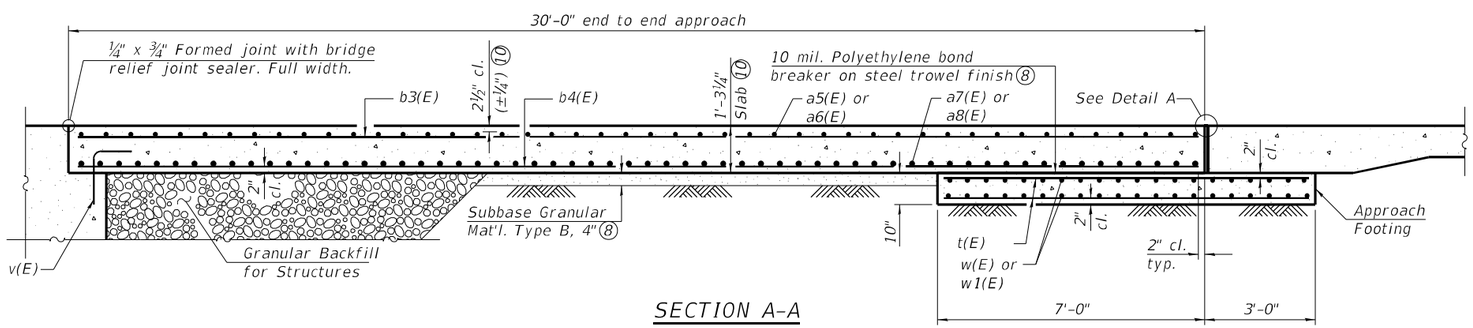

SECTION A-A

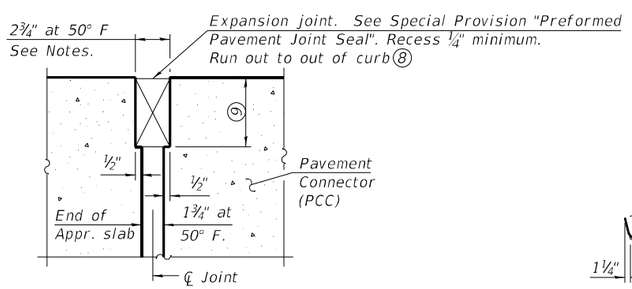

DETAIL A

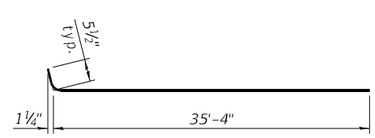

BAR a6(E)

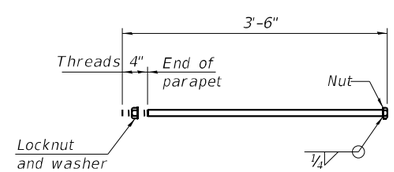

1" Ø ANCHOR BOLT 8

(Anchor bolt assemblies shall be galvanized according to Article 1006.09 of the Standard Specifications)

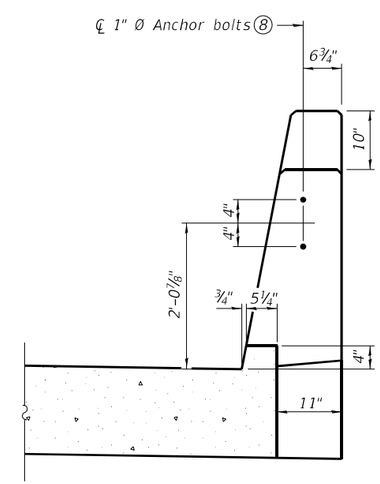

VIEW B-B

FOUR APPROACHES
BILL OF MATERIAL

Bar	No.	Size	Length	Shape
a5(E)	184	#5	30'-6"	
a6(E)	184	#5	35'-9"	
a7(E)	240	#8	30'-6"	
a8(E)	240	#8	35'-4"	
a9(E)	276	#5	7'-4"	
b3(E)	416	#5	29'-8"	
b4(E)	624	#9	29'-8"	
b5(E)	16	#5	14'-8"	
b6(E)	4	#4	14'-8"	
d(E)	276	#5	7'-0"	
d3(E)	276	#5	8'-6"	
e3(E)	144	#4	14'-8"	
t(E)	536	#4	9'-8"	
w(E)	160	#5	30'-6"	
w1(E)	160	#5	35'-4"	
Concrete Structures			Cu. Yd.	82.0
Concrete Superstructure			Cu. Yd.	25.3
Concrete Superstructure (Approach Slab)			Cu. Yd.	378.1
11 Reinforcement Bars, Epoxy Coated			Pound	153,430

FILE NAME: H:\R222064 - IDOT PTB 203 Item 49 District 9 V-V\222064.011 - I57 over Gun\Microstation\0280093_0094-78884-024-Bridge Approach Slab Details.dgn

OATES ASSOCIATES
www.oatesassociates.com
ILLINOIS DESIGN FIRM LICENSE NO.: 184.001115

USER NAME =	DESIGNED - ORG	REVISED -	
	CHECKED - KBC	REVISED -	
PLOT SCALE =	DRAWN - ORG	REVISED -	
PLOT DATE = 12/13/2024	CHECKED - KBC	REVISED -	

STATE OF ILLINOIS
DEPARTMENT OF TRANSPORTATION

BRIDGE APPROACH SLAB DETAILS
STRUCTURE NO. 028-0093 (N.B.) & 028-0094 (S.B.)

SHEET 24 OF 39 SHEETS

F.A.I. RTE.	SECTION	COUNTY	TOTAL SHEETS	SHEET NO.
57	(28-1)B-2	FRANKLIN	598	325
		CONTRACT NO. 78884		
	ILLINOIS	FED. AID PROJECT		

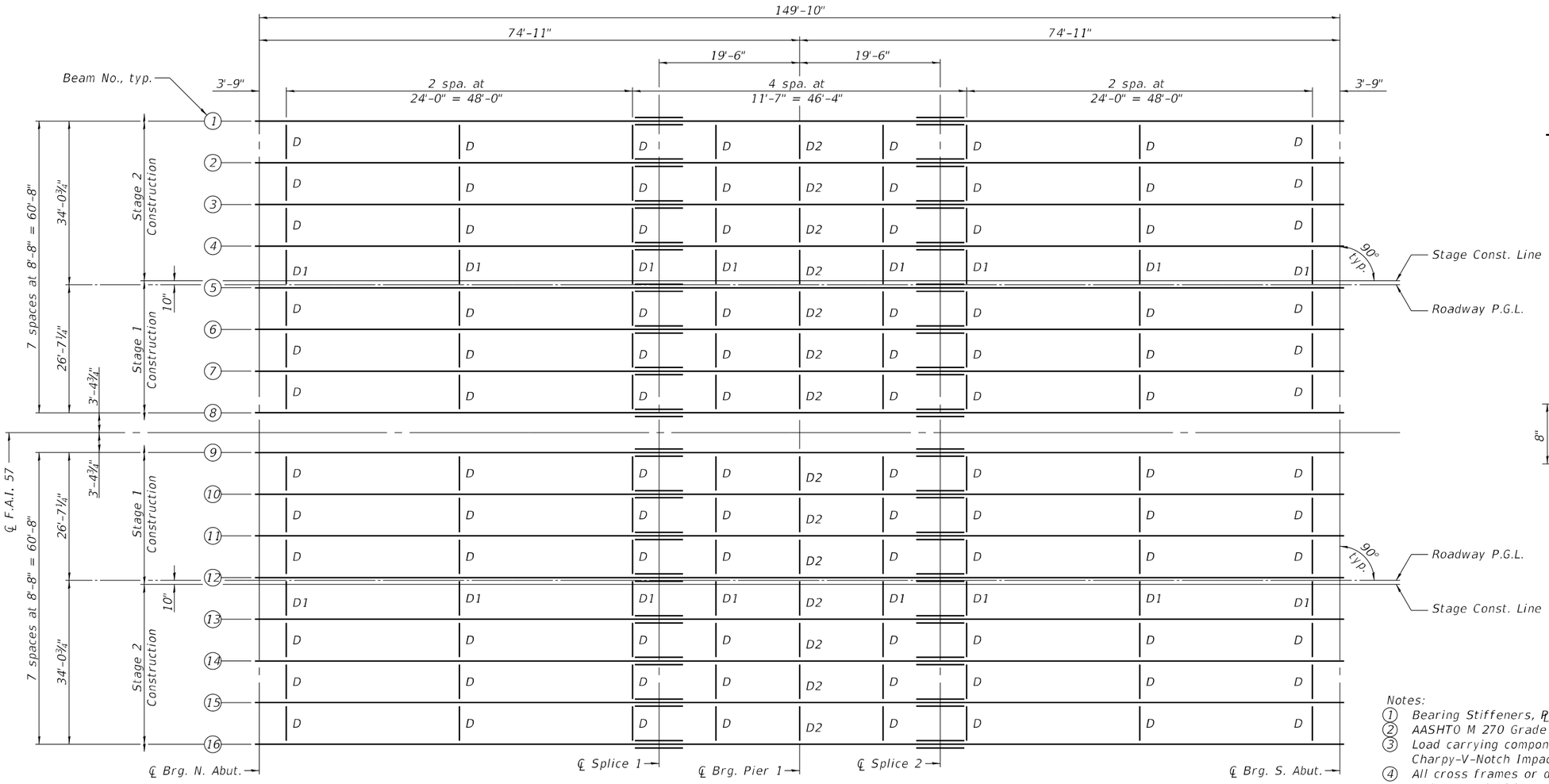

FRAMING PLAN

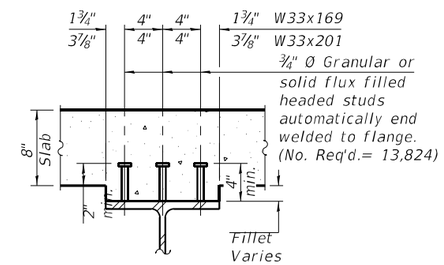

SECTION A-A

Notes:

1. Bearing Stiffeners, PL 1" x 5", one each side.
2. AASHTO M 270 Grade 50 Steel.
3. Load carrying components designated "CVN" shall conform to the Charpy-V-Notch Impact Energy Requirement, Zone 2.
4. All cross frames or diaphragms shall be installed as steel is erected and secured with erection pins and bolts except as otherwise noted. Individual cross frames or diaphragms at supports may be temporarily disconnected to install bearing anchor bolts.

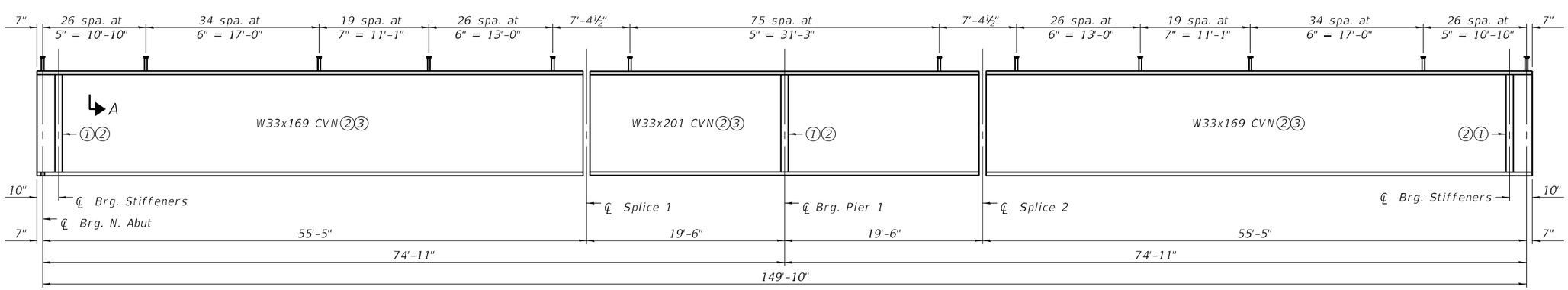

BEAM ELEVATION

(16 Required)

OATES ASSOCIATES www.oatesassociates.com ILLINOIS DESIGN FIRM LICENSE NO.: 184.001115	USER NAME =	DESIGNED - ORG	REVISED -	STATE OF ILLINOIS DEPARTMENT OF TRANSPORTATION	FRAMING PLAN STRUCTURE NO. 028-0093 (N.B.) & 028-0094 (S.B.)	F.A.I. RTE.	SECTION	COUNTY	TOTAL SHEETS / SHEET NO.
		CHECKED - KBC	REVISED -			57	(28-1)B-2	FRANKLIN	598 / 326
	PLOT SCALE =	DRAWN - ORG	REVISED -			CONTRACT NO. 78884			
	PLOT DATE = 12/13/2024	CHECKED - KBC	REVISED -		SHEET 25 OF 39 SHEETS	ILLINOIS	FED. AID PROJECT		

FILE NAME: H:\PL222064 - IDOT PTB 203 Item 49 District 9 V-V\222064.011 - I57 over Gun\Microstation\0280093_0094-78884-025-Framing Plan.dgn

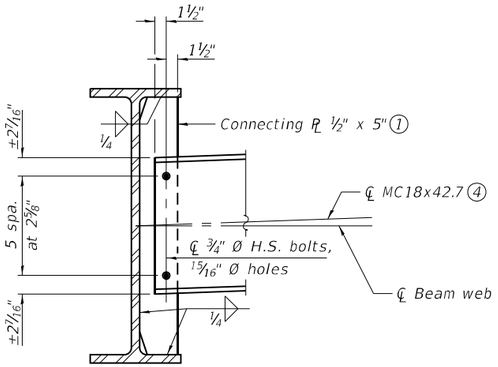

DIAPHRAGM D

(96 Required)

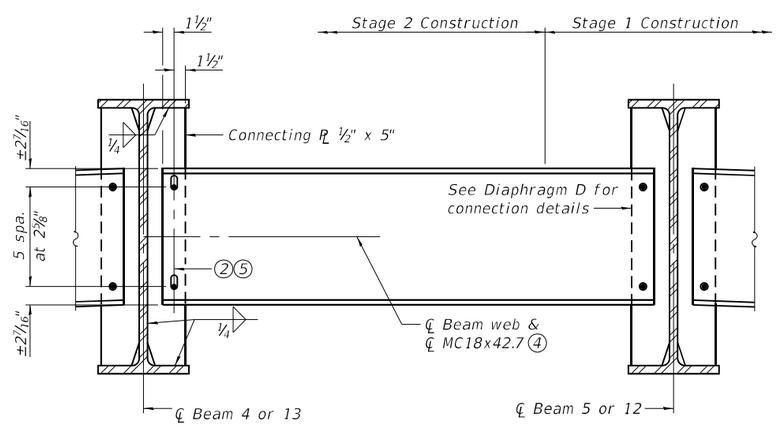

DIAPHRAGM D1 ⑤

(Showing final position)
(16 Required)

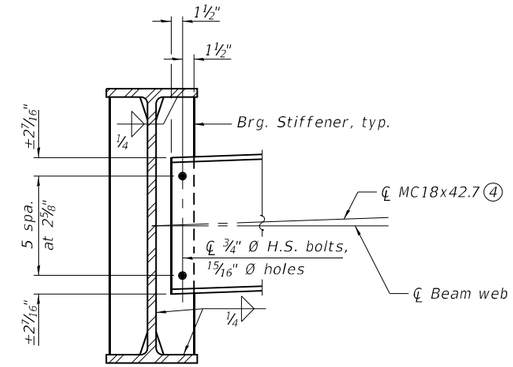

DIAPHRAGM D2

(14 Required)

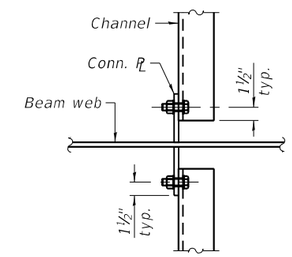

DETAIL A

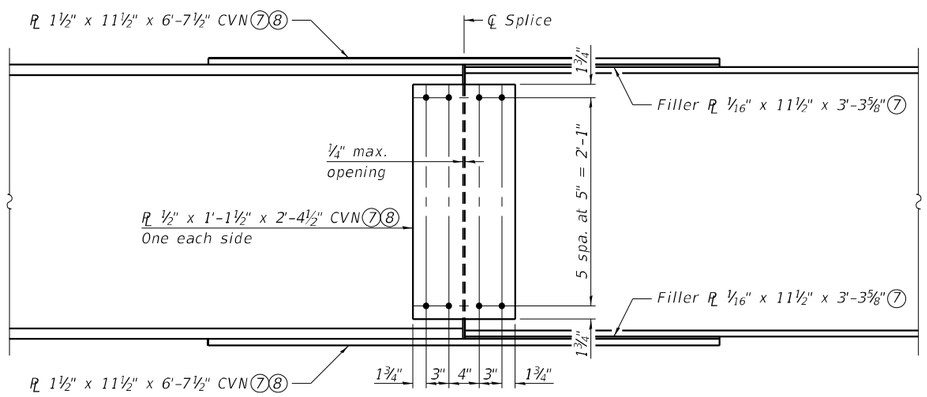

ELEVATION

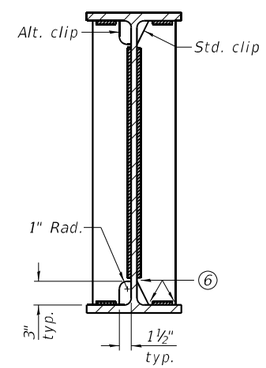

WELD LIMITS
& CLIP DETAILS

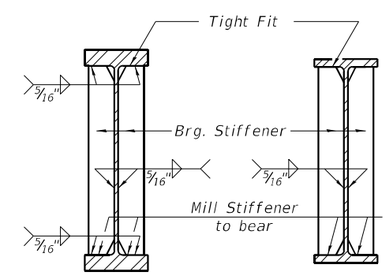

SECTION AT PIER SECTION AT ABUTMENT

BEARING STIFFENER DETAILS

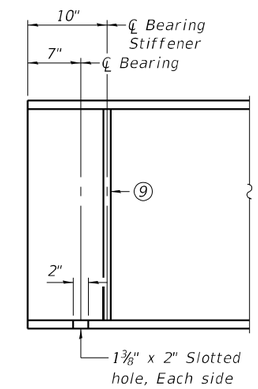

TYPICAL END OF
BEAM ELEVATION

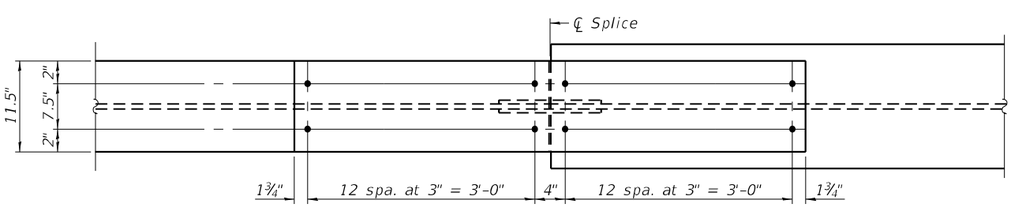

TOP & BOTTOM PLAN

SPLICE DETAIL

(32 Required)

Notes:

① Do not provide connecting plate on exterior face of fascia beams.

② ℄ ¾" Ø H.S. bolts, 15/16" Ø holes in connecting plate, and 13/16" x 1⅞" vertical slotted holes in channel. Two 5/16" structural plate washers required for each set of slotted holes.

③ Two hardened washers required for each set of oversized holes.

④ Alternate channels of equal depth and larger weight are permitted to facilitate material acquisition. Alternate channels, if utilized, shall be provided at no additional cost to the Department.

⑤ The Fabricator shall detail slotted hole locations on channel to allow for differential deflection during Stage 2 deck and parapet pour. The bolts shall be finger tight until the Stage 2 deck and parapet concrete is poured, allowing the Stage 2 beams to deflect vertically without stressing the diaphragm or Stage 1 beams. The diaphragm connection shall be detailed so that the centerline of beam web and centerline of diaphragm channel align in their final position.

⑥ Terminate ¼" (±⅛") from edges as shown, typical.

⑦ AASHTO M 270 Grade 50 Steel.

⑧ Load carrying components designated "CVN" shall conform to the Charpy-V-Notch Impact Energy Requirement, Zone 2.

⑨ Bearing Stiffeners, PL 1" x 5", one each side.

INTERIOR GIRDER MOMENT TABLE			
		0.4 Sp. 1 or 0.6 Sp. 2	Pier
I_s	(in^4)	9,290	11,600
$I_c(n)$	(in^4)	22,994	29,153
$I_c(3n)$	(in^4)	18,904	21,882
$I_c(cr)$	(in^4)	——	14,948
S_s	(in^3)	549	686
$S_c(n)$	(in^3)	794	953
$S_c(3n)$	(in^3)	727	874
$S_c(cr)$	(in^3)	——	763
S_x	(in^3)	731	522
DC1	(k/')	1.087	1.124
M_{DC1}	('k)	414.2	839.1
DC2	(k/')	0.190	0.190
M_{DC2}	('k)	72.2	139.5
DW	(k/')	0.403	0.403
M_{DW}	('k)	153.0	296.0
LLDF		0.647	0.658
M_{LL+IM}	('k)	951.6	1,057.6
f_f (Strength I)	(ksi)	——	——
$M_u + \frac{1}{3} f_f S_x$	('k)	2,502.8	3,518.1
$\phi_f M_n$	('k)	3,962.1	3,655.3
f_s DC1	(ksi)	9.06	14.68
f_s DC2	(ksi)	1.19	2.19
f_s DW	(ksi)	2.53	4.66
f_s (LL+IM)	(ksi)	14.38	16.63
f_f (Service II)	(ksi)	——	——
$f_s + f_f/2$ (Service II)	(ksi)	31.47	43.15
Service II Resistance	(ksi)	47.50	47.50
$f_s + f_f/3$ (Strength I)	(ksi)	——	——
$\phi_f F_n$	(ksi)	——	——
V_f	(k)	66.9	69.2

GIRDER REACTION TABLE			
		Abut.	Pier
LLDF		0.861	0.861
OCF		——	——
R_{DC1}	(k)	30.4	106.7
R_{DC2}	(k)	5.3	18.0
R_{DW}	(k)	11.2	38.1
R_{LL}	(k)	78.9	133.5
R_{IM}	(k)	20.1	26.9
R_{Total} (Strength I)(Impact)	(k)	234.7	493.7
R_{Total} (Strength I)(No Impact)	(k)	199.5	446.7

I_s, S_s : Non-composite moment of inertia and section modulus of the steel section used for computing f_s(Total-Strength I, and Service II) due to non-composite dead loads ($in.^4$ and $in.^3$).

$I_c(n)$, $S_c(n)$: Composite moment of inertia and section modulus of the steel and deck based upon the modular ratio, "n", used for computing f_s(Total-Strength I, and Service II) in uncracked sections due to short-term composite live loads ($in.^4$ and $in.^3$).

$I_c(3n)$, $S_c(3n)$: Composite moment of inertia and section modulus of the steel and deck based upon 3 times the modular ratio, "3n", used for computing f_s(Total-Strength I, and Service II) in uncracked sections, due to long-term composite (superimposed) dead loads ($in.^4$ and $in.^3$).

$I_c(cr)$, $S_c(cr)$: Composite moment of inertia and section modulus of the steel and longitudinal deck reinforcement, used for computing f_s (Total-Strength I and Service II) in cracked sections, due to both short-term composite live loads and long-term composite (superimposed) dead loads ($in.^4$ and $in.^3$).

S_x : Section modulus about the major axis of a section to the controlling flange, tension or compression, taken as yield moment with respect to the controlling flange over the yield strength of the controlling flange ($in.^3$).

DC1: Un-factored non-composite dead load (kips/ft.).

M_{DC1} : Un-factored moment due to non-composite dead load (kip-ft.).

DC2: Un-factored long-term composite (superimposed excluding future wearing surface) dead load (kips/ft.).

M_{DC2} : Un-factored moment due to long-term composite (superimposed excluding future wearing surface) dead load (kip-ft.).

DW: Un-factored long-term composite (superimposed future wearing surface only) dead load (kips/ft.).

M_{DW} : Un-factored moment due to long-term composite (superimposed future wearing surface only) dead load (kip-ft.).

LLDF: Live Load Distribution Factor for moment and shear computed according to Article 4.6.2.2 and further IDOT provisions.

M_{LL+IM}: Un-factored live load moment plus dynamic load allowance (impact) (kip-ft.).

M_u : Strength I load combination of factored design moments (kip-ft.). $1.25 (M_{DC1} + M_{DC2}) + 1.5 M_{DW} + 1.75 M_{LL+IM}$

f_f : Factored calculated flange lateral bending stress as calculated using Article 6.10.1.6 and as further simplified by IDOT provisions (ksi).

$\phi_f M_n$: Factored nominal flexural resistance of the section determined as specified in Article 6.10.7.1 or A6 as applicable (kip-ft.).

f_s DC1: Un-factored stress at edge of flange for controlling steel flange due to vertical non-composite dead loads as calculated below (ksi).
M_{DC1} / S_s

f_s DC2: Un-factored stress at edge of flange for controlling steel flange due to vertical composite dead loads as calculated below (ksi).
$M_{DC2} / S_c(3n)$ or $M_{DC2} / S_c(cr)$ as applicable.

f_s DW: Un-factored stress at edge of flange for controlling steel flange due to vertical composite future wearing surface loads as calculated below (ksi).
$M_{DW} / S_c(3n)$ or $M_{DW} / S_c(cr)$ as applicable.

f_s (LL + IM): Un-factored stress at edge of flange for controlling steel flange due to vertical composite live load plus impact loads as calculated below (ksi).
$M_{LL+IM} / S_c(n)$ or $M_{LL+IM} / S_c(cr)$ as applicable.

$f_s + f_f/2$ (Service II): Sum of stresses as computed below (ksi).
f_s DC1 + f_s DC2 + f_s DW + 1.3 f_s (LL + IM) + $f_f/2$

Service II Resistance: Composite ($0.95R_hF_{yf}$) or noncomposite ($0.80R_hF_{yf}$) stress capacity according to Article 6.10.4.2 (ksi).

$f_s + f_f/3$ (Strength I): Sum of stresses as computed below on non-compact sections (ksi).
1.25 (f_s DC1 + f_s DC2) + 1.5 f_s DW + 1.75 f_s (LL + IM) + $f_f/3$

$\phi_f F_n$: Factored nominal flexural resistance of the section as specified in Article 6.10.7.2 or 6.10.8 as applicable (ksi).

V_f : Maximum factored shear range in span computed according to Article 6.10.10.

OCF: Obtuse Correction Factor according to Article 4.6.2.2.3c or as further simplified by IDOT provisions.

R_{DC1} : Un-factored reaction due to non-composite dead load (kip).

R_{DC2} : Un-factored reaction due to long-term composite (superimposed excluding future wearing surface) dead load (kip).

R_{DW} : Un-factored reaction due to long-term composite (superimposed future wearing surface only) dead load (kip).

R_{LL} : Un-factored live load reaction (kip).

R_{IM} : Un-factored dynamic load allowance (impact) (kip).

R_{Total} (Strength I)(Impact): Strength I load combination of factored design reactions (kip).
$1.25 (R_{DC1} + R_{DC2}) + 1.5R_{DW} + 1.75 (R_{LL} + R_{IM})$

R_{Total} (Strength I)(No Impact): Strength I load combination of factored design reactions, not including dynamic load allowance (Impact) (kip).
$1.25 (R_{DC1} + R_{DC2}) + 1.5R_{DW} + 1.75 (R_{LL})$

Note:
M_{LL} and R_{LL} include the effects of centrifugal force and superelevation.

TOP OF BEAM ELEVATIONS ①②

	Beam 1	Beam 2	Beam 3	Beam 4	Beam 5	Beam 6	Beam 7	Beam 8	Beam 9	Beam 10	Beam 11	Beam 12	Beam 13	Beam 14	Beam 15	Beam 16
℄ Brg. N. Abut.	417.26	417.43	417.57	417.58	417.45	417.28	417.10	416.93	416.93	417.10	417.28	417.45	417.58	417.57	417.43	417.26
℄ Splice 1	417.18	417.35	417.49	417.50	417.37	417.20	417.02	416.85	416.85	417.02	417.20	417.37	417.50	417.49	417.35	417.18
℄ Brg. Pier 1	417.18	417.35	417.49	417.50	417.37	417.20	417.02	416.85	416.85	417.02	417.20	417.37	417.50	417.49	417.35	417.18
℄ Splice 2	417.18	417.35	417.49	417.50	417.37	417.20	417.02	416.85	416.85	417.02	417.20	417.37	417.50	417.49	417.35	417.18
℄ Brg. S. Abut.	417.26	417.43	417.57	417.58	417.45	417.28	417.10	416.93	416.93	417.10	417.28	417.45	417.58	417.57	417.43	417.26

BEARING SHIM PLATES

	Beam 4	Beam 13
℄ Brg. N. Abut.	1/8"	1/8"
℄ Brg. Pier	1/8"	1/8"
℄ Brg. S. Abut.	1/8"	1/8"

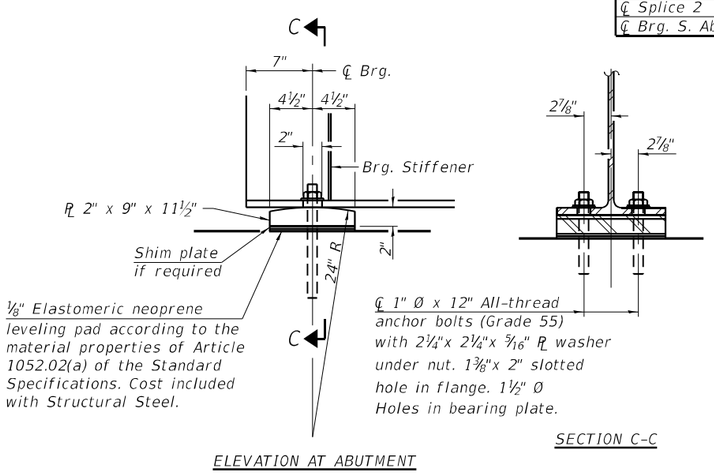

ELEVATION AT ABUTMENT

SECTION C-C

FIXED BEARING

(32 Required)

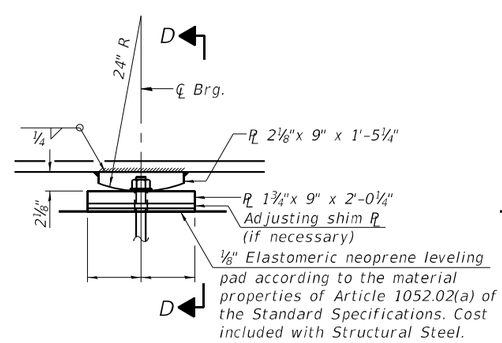

ELEVATION AT PIER

FIXED BEARING

(16 Required)

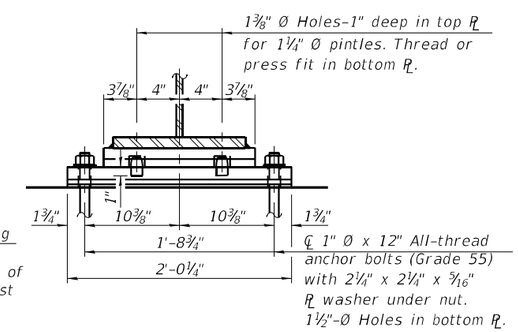

SECTION D-D

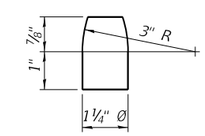

PINTLE

BILL OF MATERIAL

Item	Unit	Total
Anchor Bolts, 1"	Each	96

Notes:
① For fabrication only.
② Top of Beam Elevations at ℄ Splices taken at top of W33x169.
③ Anchor bolts and side retainers at all supports shall be installed as each member is erected unless an equivalent temporary means of lateral restraint is used.
④ All (embedded and separate) bearing plates, anchor bolts, nuts, washers and pintles shall be galvanized according to AASHTO M111 or M232 as applicable.
⑤ The anchor bolt sizes and grades shown constitute a calculated seismic structural fuse. Substitution of higher diameter and/or grade anchor bolts will not be allowed.
⑥ Two ⅛" adjusting shims shall be provided for each bearing in addition to all other plates or shims and placed as shown on bearing details.
⑦ The structural steel plates of the bearing assemblies shall conform to the requirements of AASHTO M 270 Grade 50.

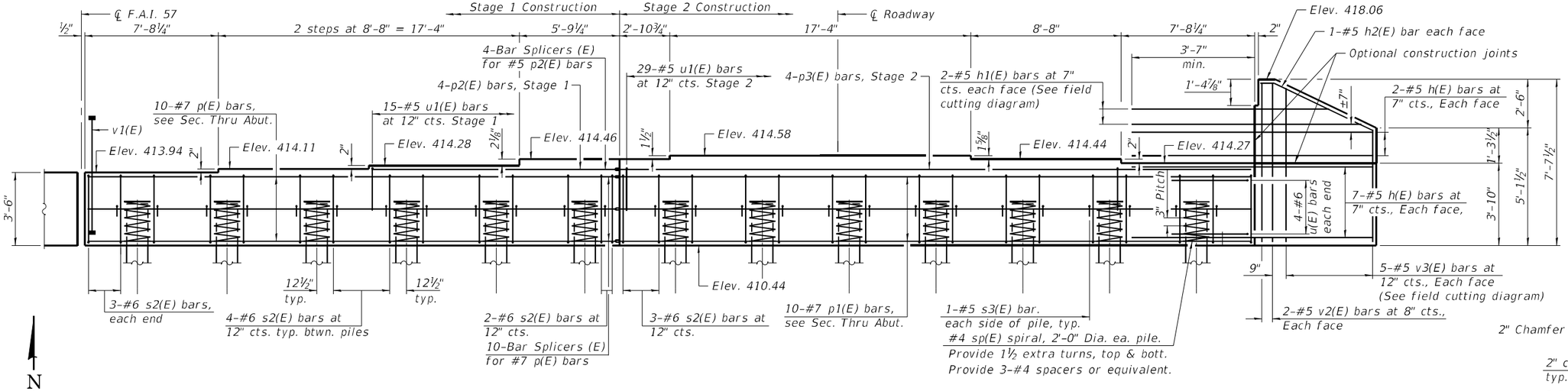

ELEVATION

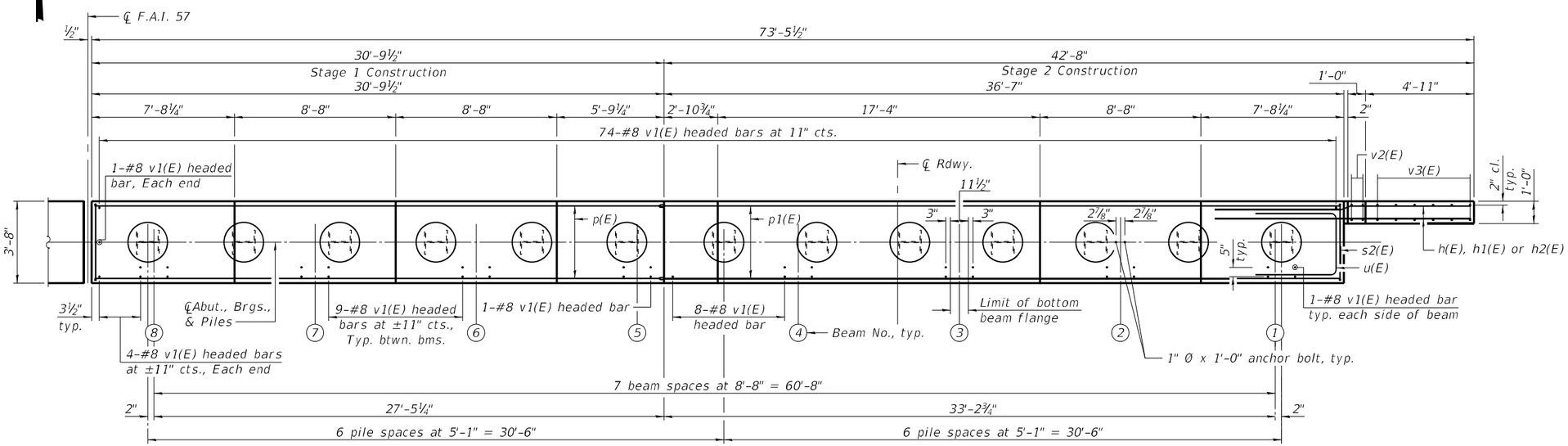

PLAN

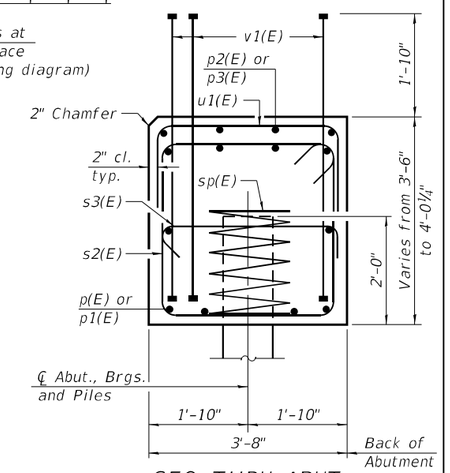

SEC. THRU ABUT.

BILL OF MATERIAL

	Bar	No.	Size	Length	Shape
	h(E)	18	#5	9'-6"	
	h1(E)	2	#5	16'-2"	
	h2(E)	2	#5	6'-3"	
	p(E)	10	#7	30'-6"	
	p1(E)	10	#7	36'-3"	
	p2(E)	4	#5	14'-2"	
	p3(E)	4	#5	28'-9"	
	s2(E)	55	#6	14'-4"	
	s3(E)	26	#5	4'-4"	
4	sp(E)	13	#4	2'-0"	
	u(E)	8	#6	11'-10"	
	u1(E)	44	#5	7'-4"	
	v1(E)	163	#8	5'-6"	
	v2(E)	4	#5	7'-3"	
	v3(E)	5	#5	11'-7"	
	Structure Excavation			Cu. Yd.	39
	Concrete Structures			Cu. Yd.	37.2
	Reinforcement Bars, Epoxy Coated			Pound	6,630
	Furnishing Steel Piles, HP 14X102			Foot	732
	Driving Piles			Foot	732
	Test Pile Steel, HP 14x102			Each	1
	Pile Shoes			Each	13

PILE DATA

Type: HP 14x102 with Pile Shoes
Nominal Required Bearing: 810 kips
Factored Resistance Available: 445 kips
Est. Length: 61 ft.
No. Production Piles: 12
No. Test Piles: 1

Notes:

1. Pour steps monolithically with cap.
2. Bar terminators paid for separately. See Total Bill of Material.
3. For details of piles see sheet 35 of 39.
4. Length is height of spiral.
5. For bar splicer details, see sheet 34 of 39.

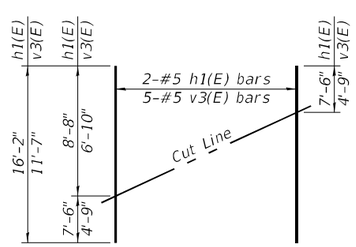

FIELD CUTTING DIAGRAM

Order h1(E) and v3(E) full length. Cut as shown and use remainder of bars in opposite face of wing.

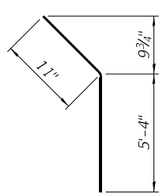

BAR h2(E)

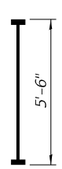

BAR v1(E)

(Headed)
(326-#8 Bar Terminators)

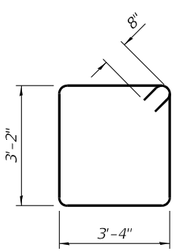

BAR s2(E)

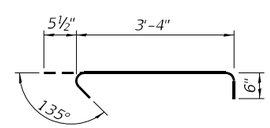

BAR s3(E)

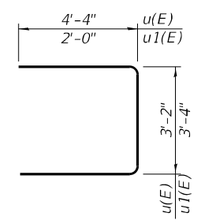

BARS u(E) & u1(E)

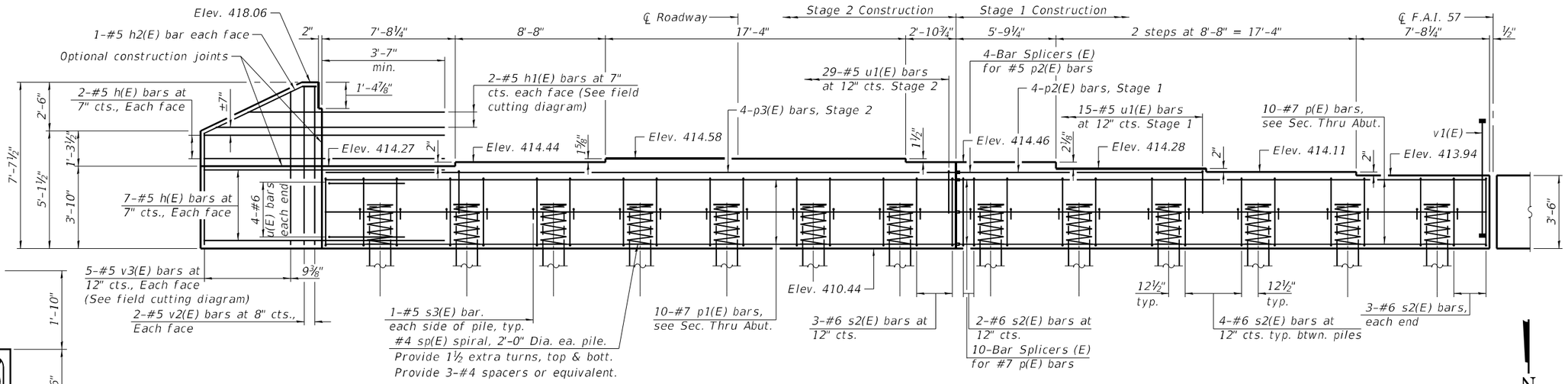

ELEVATION

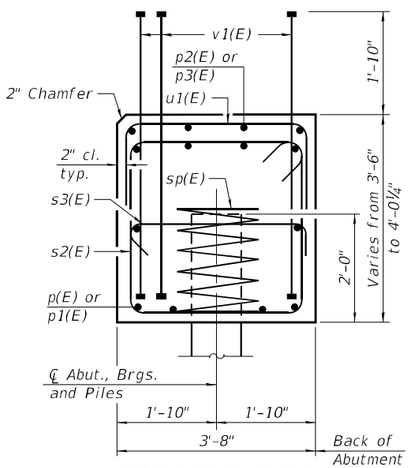

SEC. THRU ABUT.

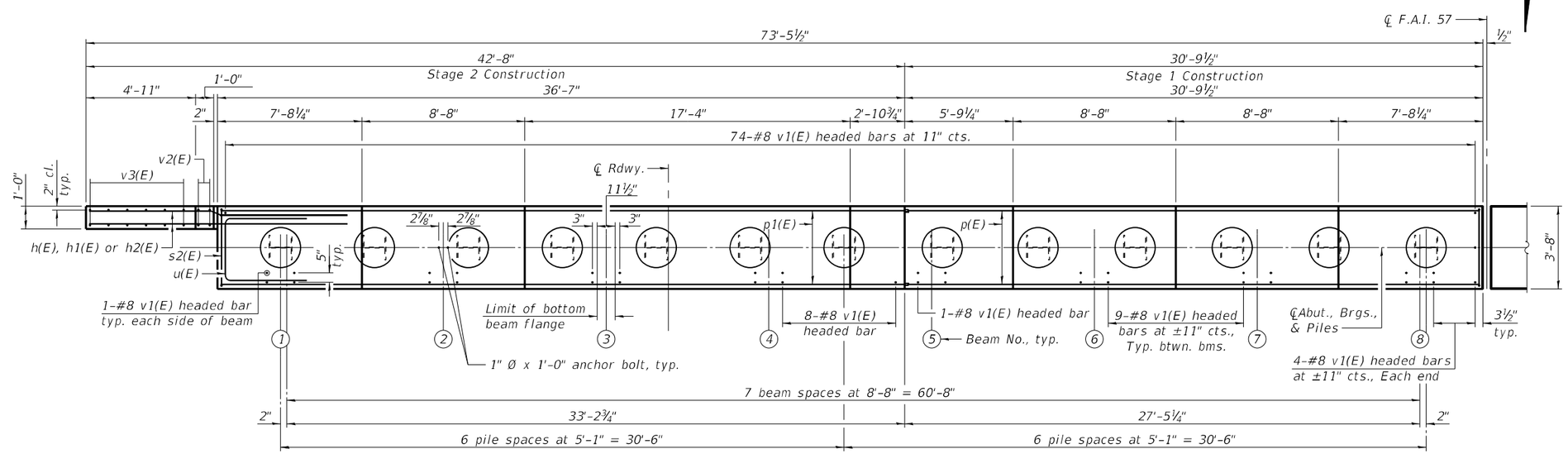

PLAN

BILL OF MATERIAL

	Bar	No.	Size	Length	Shape
	h(E)	18	#5	9'-6"	
	h1(E)	2	#5	16'-2"	
	h2(E)	2	#5	6'-3"	
	p(E)	10	#7	30'-6"	
	p1(E)	10	#7	36'-3"	
	p2(E)	4	#5	14'-2"	
	p3(E)	4	#5	28'-9"	
	s2(E)	55	#6	14'-4"	
	s3(E)	26	#5	4'-4"	
(4)	sp(E)	13	#4	2'-0"	
	u(E)	8	#6	11'-10"	
	u1(E)	44	#5	7'-4"	
	v1(E)	163	#8	5'-6"	
	v2(E)	4	#5	7'-3"	
	v3(E)	5	#5	11'-7"	
	Structure Excavation		Cu. Yd.	39	
	Concrete Structures		Cu. Yd.	37.2	
	Reinforcement Bars, Epoxy Coated		Pound	6,630	
	Furnishing Steel Piles, HP 14X102		Foot	636	
	Driving Piles		Foot	636	
	Test Pile Steel, HP 14x102		Each	1	
	Pile Shoes		Each	13	

PILE DATA

Type: HP 14x102 with Pile Shoes
Nominal Required Bearing: 810 kips
Factored Resistance Available: 445 kips
Est. Length: 53 ft.
No. Production Piles: 12
No. Test Piles: 1

Notes:
1. Pour steps monolithically with cap.
2. Bar terminators paid for separately. See Total Bill of Material.
3. For details of piles see sheet 35 of 39.
4. Length is height of spiral.
5. For bar splicer details, see sheet 34 of 39.

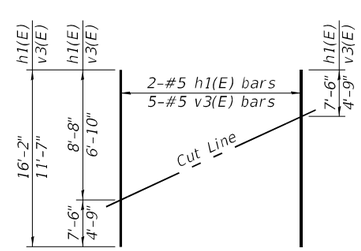

FIELD CUTTING DIAGRAM

Order h1(E) and v3(E) full length. Cut as shown and use remainder of bars in opposite face of wing.

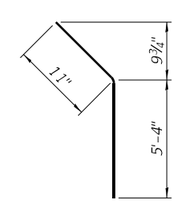

BAR h2(E)

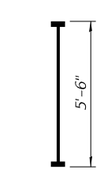

BAR v1(E)
(Headed)
(326-#8 Bar Terminators)

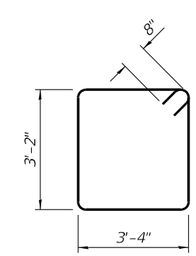

BAR s2(E)

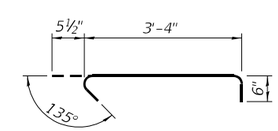

BAR s3(E)

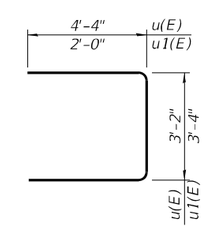

BARS u(E) & u1(E)

FILE NAME: H:\P222064 - IDOT PTB 203 Item 49 District 9 V-V\222064.011 - I57 over Gun\Microstation\0280093_0094-78884-029-Abutment Details-N.B.dgn

OATES ASSOCIATES
www.oatesassociates.com
ILLINOIS DESIGN FIRM LICENSE NO.: 184.001115

USER NAME =	DESIGNED - ORG	REVISED -	
	CHECKED - KBC	REVISED -	
PLOT SCALE =	DRAWN - ORG	REVISED -	
PLOT DATE = 12/13/2024	CHECKED - KBC	REVISED -	

STATE OF ILLINOIS
DEPARTMENT OF TRANSPORTATION

SOUTH ABUTMENT DETAILS
STRUCTURE NO. 028-0093 (N.B.)

SHEET 29 OF 39 SHEETS

F.A.I. RTE.	SECTION	COUNTY	TOTAL SHEETS	SHEET NO.
57	(28-1)B-2	FRANKLIN	598	330
		CONTRACT NO. 78884		
		ILLINOIS	FED. AID PROJECT	

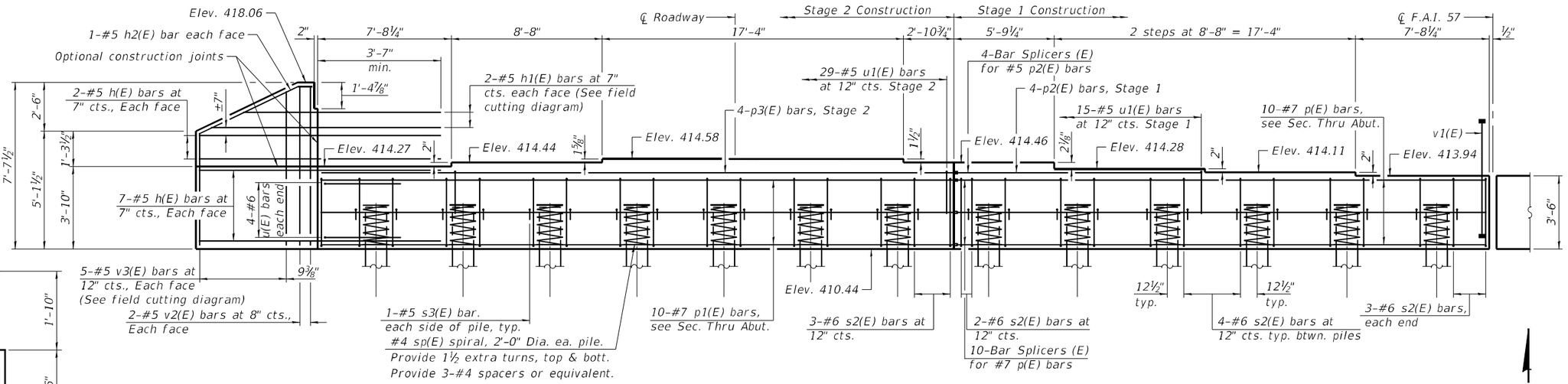

ELEVATION

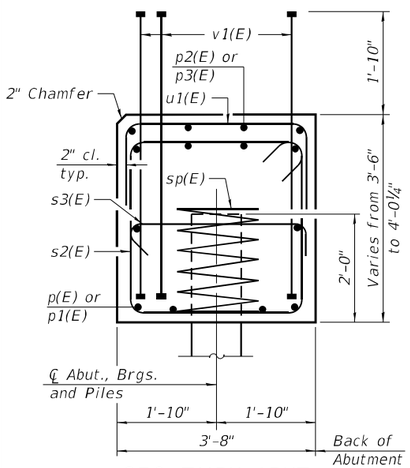

SEC. THRU ABUT.

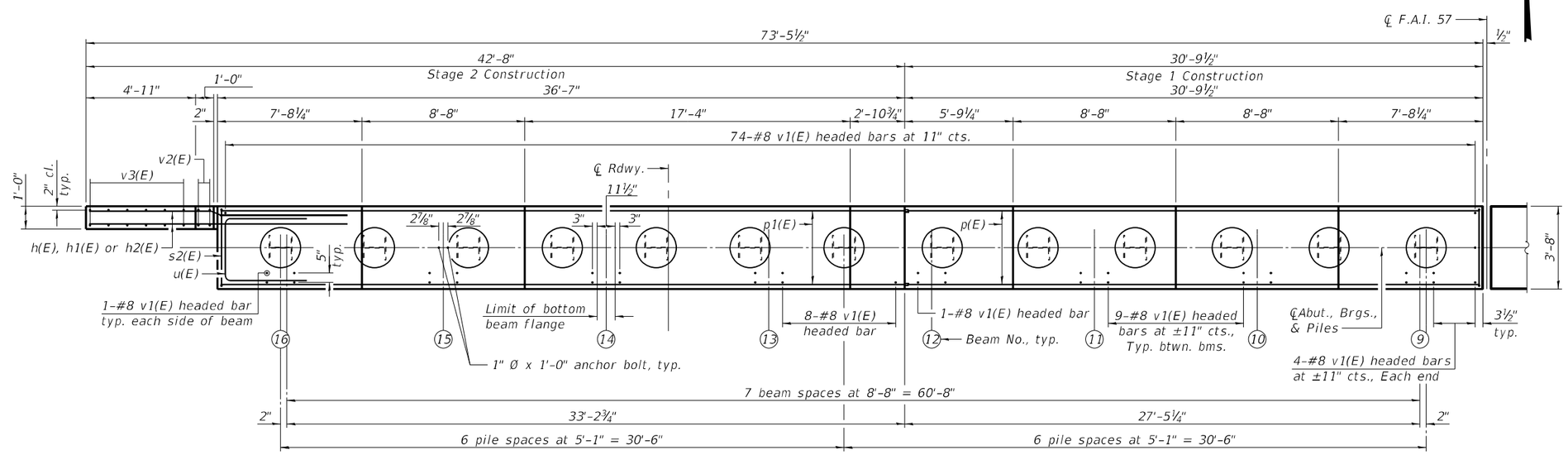

PLAN

N

BILL OF MATERIAL

	Bar	No.	Size	Length	Shape
	h(E)	18	#5	9'-6"	
	h1(E)	2	#5	16'-2"	
	h2(E)	2	#5	6'-3"	
	p(E)	10	#7	30'-6"	
	p1(E)	10	#7	36'-3"	
	p2(E)	4	#5	14'-2"	
	p3(E)	4	#5	28'-9"	
	s2(E)	55	#6	14'-4"	
	s3(E)	26	#5	4'-4"	
4	sp(E)	13	#4	2'-0"	
	u(E)	8	#6	11'-10"	
	u1(E)	44	#5	7'-4"	
	v1(E)	163	#8	5'-6"	
	v2(E)	4	#5	7'-3"	
	v3(E)	5	#5	11'-7"	
	Structure Excavation			Cu. Yd.	39
	Concrete Structures			Cu. Yd.	37.2
	Reinforcement Bars, Epoxy Coated			Pound	6,630
	Furnishing Steel Piles, HP 14X102			Foot	732
	Driving Piles			Foot	732
	Test Pile Steel, HP 14x102			Each	1
	Pile Shoes			Each	13

PILE DATA

Type: HP 14x102 with Pile Shoes
Nominal Required Bearing: 810 kips
Factored Resistance Available: 445 kips
Est. Length: 61 ft.
No. Production Piles: 12
No. Test Piles: 1

Notes:
1. Pour steps monolithically with cap.
2. Bar terminators paid for separately. See Total Bill of Material.
3. For details of piles see sheet 35 of 39.
4. Length is height of spiral.
5. For bar splicer details, see sheet 34 of 39.

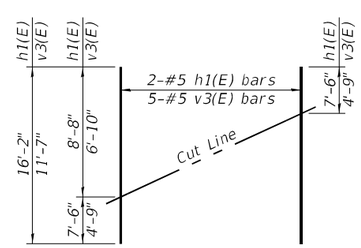

FIELD CUTTING DIAGRAM

Order h1(E) and v3(E) full length. Cut as shown and use remainder of bars in opposite face of wing.

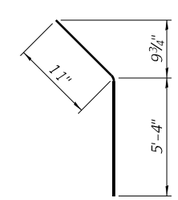

BAR h2(E)

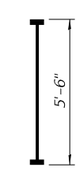

BAR v1(E)

(Headed)
(326-#8 Bar Terminators)

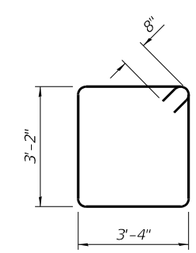

BAR s2(E)

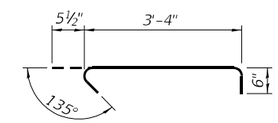

BAR s3(E)

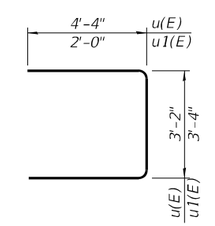

BARS u(E) & u1(E)

FILE NAME: H:\P\222064 - IDOT PTB 203 Item 49 District 9 V-V\222064.011 - I57 over Gun\Microstation\0280093_0094-78884-030-Abutment Details-S.B..dgn

OATES ASSOCIATES
www.oatesassociates.com
ILLINOIS DESIGN FIRM LICENSE NO.: 184.001115

USER NAME =	DESIGNED - ORG	REVISED -	
	CHECKED - KBC	REVISED -	
PLOT SCALE =	DRAWN - ORG	REVISED -	
PLOT DATE = 12/13/2024	CHECKED - KBC	REVISED -	

STATE OF ILLINOIS
DEPARTMENT OF TRANSPORTATION

NORTH ABUTMENT DETAILS
STRUCTURE NO. 028-0094 (S.B.)

SHEET 30 OF 39 SHEETS

F.A.I. RTE.	SECTION	COUNTY	TOTAL SHEETS	SHEET NO.
57	(28-1)B-2	FRANKLIN	598	331
		CONTRACT NO. 78884		
	ILLINOIS	FED. AID PROJECT		

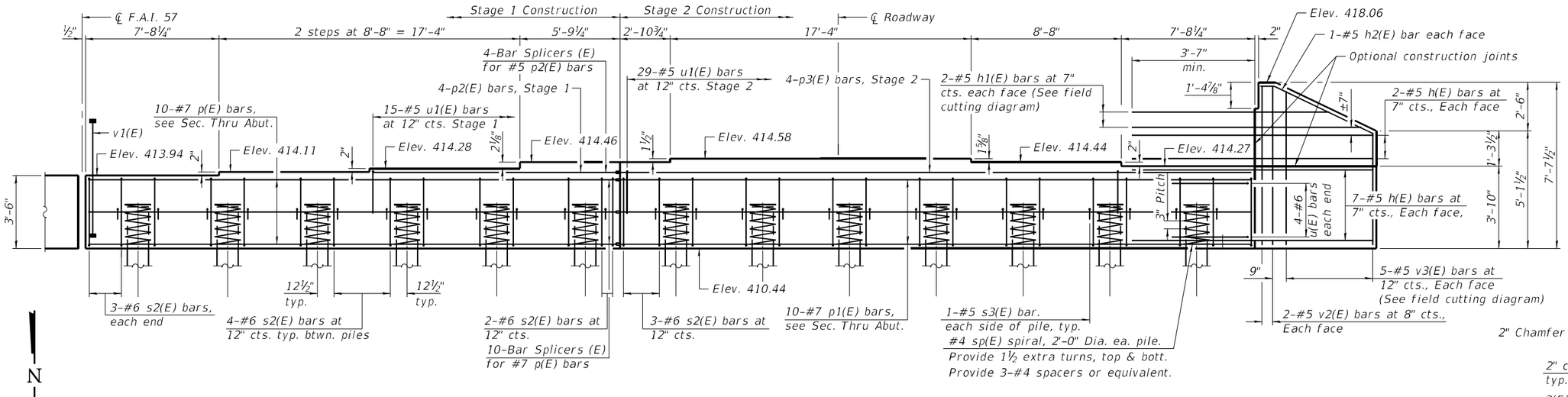

ELEVATION

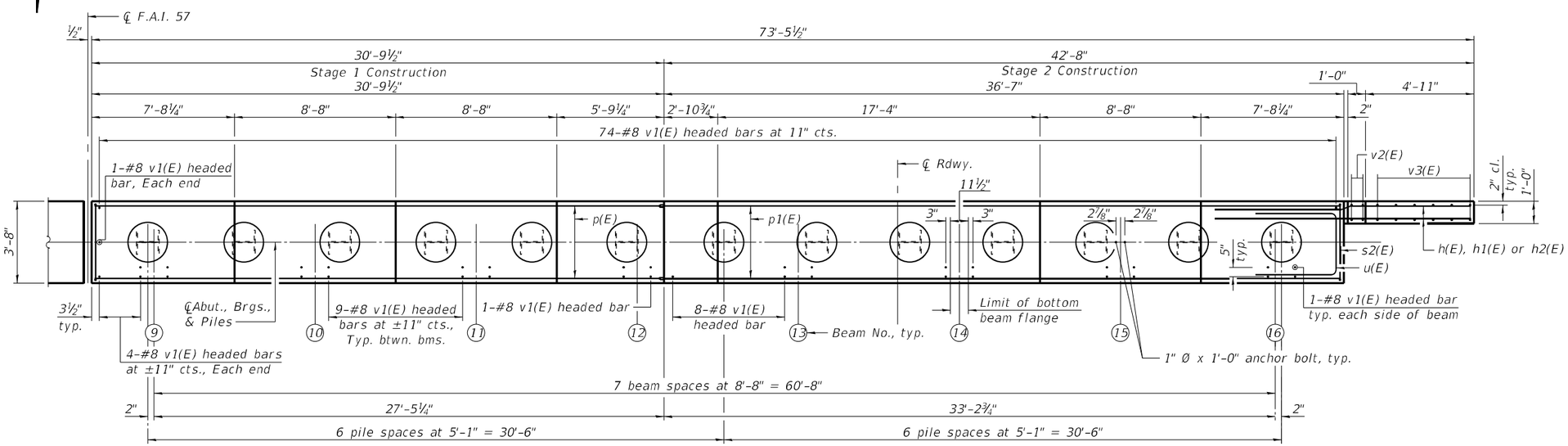

PLAN

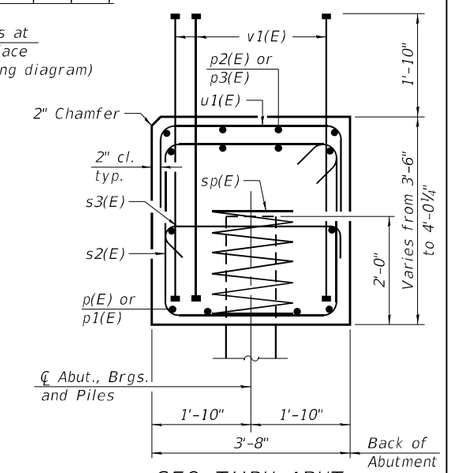

SEC. THRU ABUT.

BILL OF MATERIAL

	Bar	No.	Size	Length	Shape
	h(E)	18	#5	9'-6"	
	h1(E)	2	#5	16'-2"	
	h2(E)	2	#5	6'-3"	
	p(E)	10	#7	30'-6"	
	p1(E)	10	#7	36'-3"	
	p2(E)	4	#5	14'-2"	
	p3(E)	4	#5	28'-9"	
	s2(E)	55	#6	14'-4"	
	s3(E)	26	#5	4'-4"	
4	sp(E)	13	#4	2'-0"	
	u(E)	8	#6	11'-10"	
	u1(E)	44	#5	7'-4"	
	v1(E)	163	#8	5'-6"	
	v2(E)	4	#5	7'-3"	
	v3(E)	5	#5	11'-7"	
	Structure Excavation			Cu. Yd.	39
	Concrete Structures			Cu. Yd.	37.2
	Reinforcement Bars, Epoxy Coated			Pound	6,630
	Furnishing Steel Piles, HP 14X102			Foot	636
	Driving Piles			Foot	636
	Test Pile Steel, HP 14x102			Each	1
	Pile Shoes			Each	13

PILE DATA

Type: HP 14x102 with Pile Shoes
Nominal Required Bearing: 810 kips
Factored Resistance Available: 445 kips
Est. Length: 53 ft.
No. Production Piles: 12
No. Test Piles: 1

Notes:
1. Pour steps monolithically with cap.
2. Bar terminators paid for separately. See Total Bill of Material.
3. For details of piles see sheet 35 of 39.
4. Length is height of spiral.
5. For bar splicer details, see sheet 34 of 39.

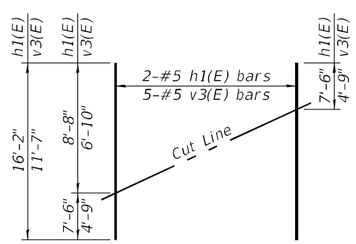

FIELD CUTTING DIAGRAM

Order h1(E) and v3(E) full length. Cut as shown and use remainder of bars in opposite face of wing.

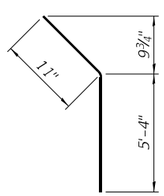

BAR h2(E)

BAR v1(E)

(Headed)
(326-#8 Bar Terminators)

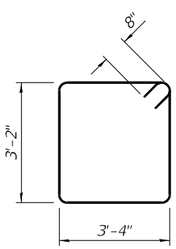

BAR s2(E)

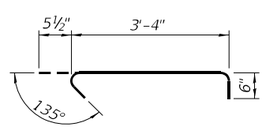

BAR s3(E)

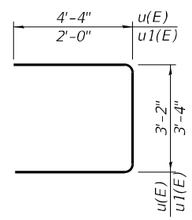

BARS u(E) & u1(E)

FILE NAME: H:\P222064 - IDOT PTB 203 Item 49 District 9 V-V\222064.011 - I57 over Gun\Microstation\0280093_0094-78884-031-Abutment Details-S.B..dgn

OATES ASSOCIATES
www.oatesassociates.com
ILLINOIS DESIGN FIRM LICENSE NO.: 184.001115

USER NAME =	DESIGNED - ORG	REVISED -
	CHECKED - KBC	REVISED -
PLOT SCALE =	DRAWN - ORG	REVISED -
PLOT DATE = 12/13/2024	CHECKED - KBC	REVISED -

STATE OF ILLINOIS
DEPARTMENT OF TRANSPORTATION

SOUTH ABUTMENT DETAILS
STRUCTURE NO. 028-0094 (S.B.)

SHEET 31 OF 39 SHEETS

F.A.I. RTE.	SECTION	COUNTY	TOTAL SHEETS	SHEET NO.
57	(28-1)B-2	FRANKLIN	598	332

CONTRACT NO. 78884

ILLINOIS | FED. AID PROJECT

PILE DATA

Type: HP 14x102 with Pile Shoes
Nominal Required Bearing: 810 kips
Factored Resistance Available: 445 kips
Est. Length: 60 ft
No. Production Piles: 12
No. Test Piles: 1

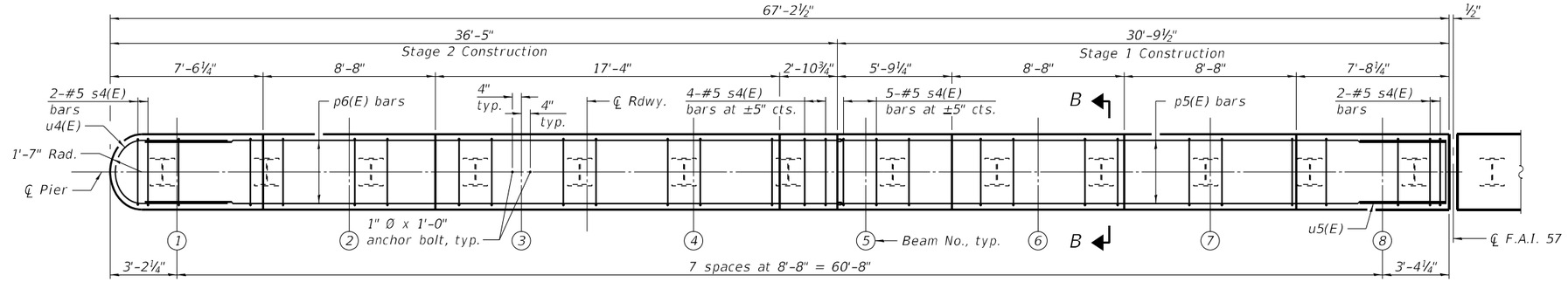

TOP PLAN

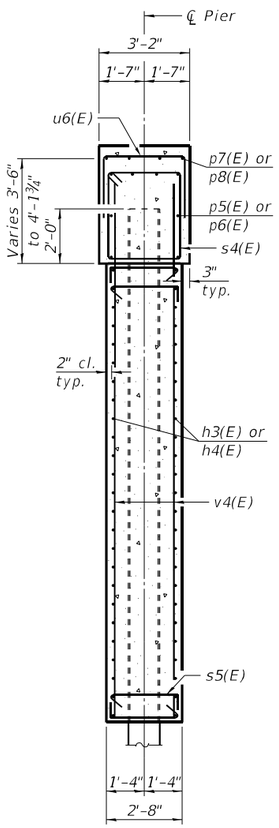

SECTION THRU PIER

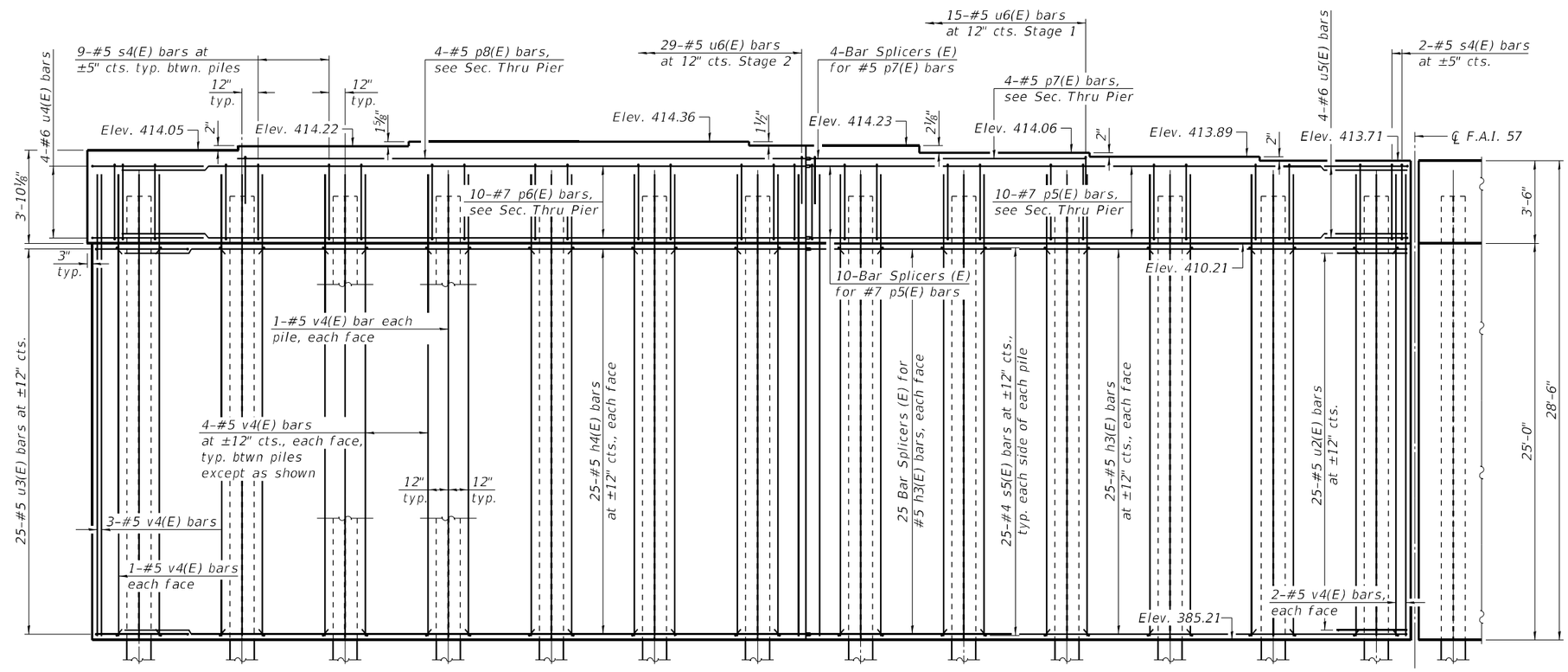

ELEVATION
(Looking South)

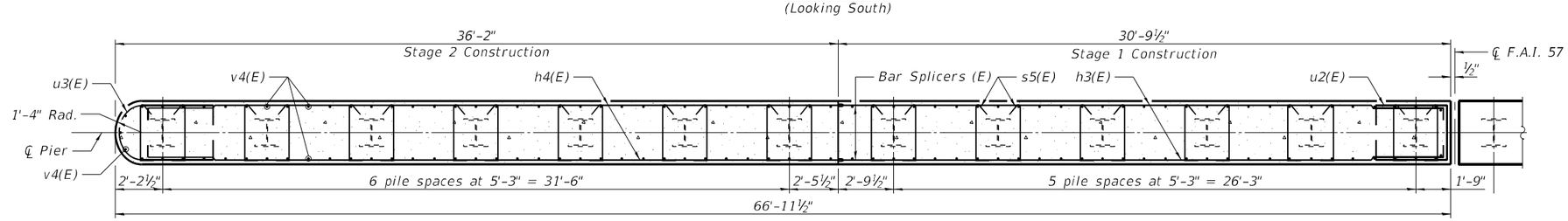

SECTION A-A

Notes:

1. Pour steps monolithically with cap.
2. See sheet 34 of 39 for additional pier details and Bill of Material.
3. For details of piles, see sheet 35 of 39.
4. For bar splicer details, see sheet 36 of 39.
5. For cofferdam limits, see sheet 34 of 39.

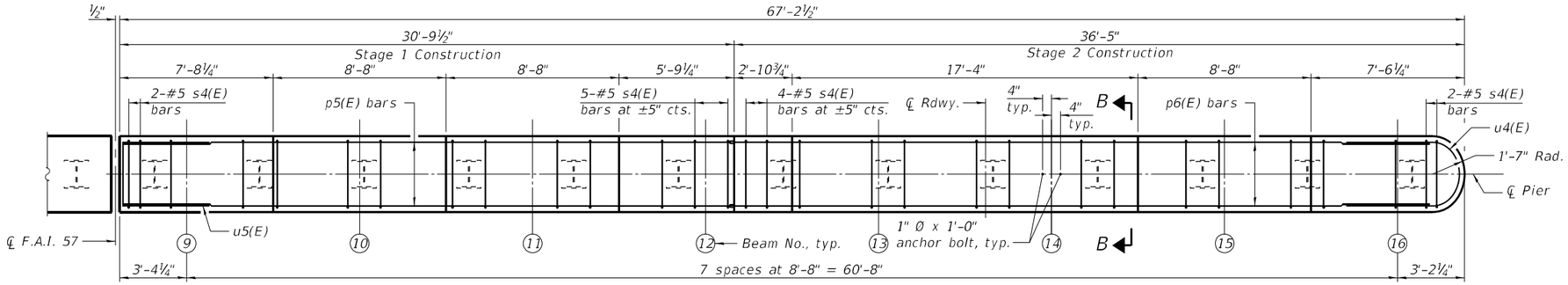

TOP PLAN

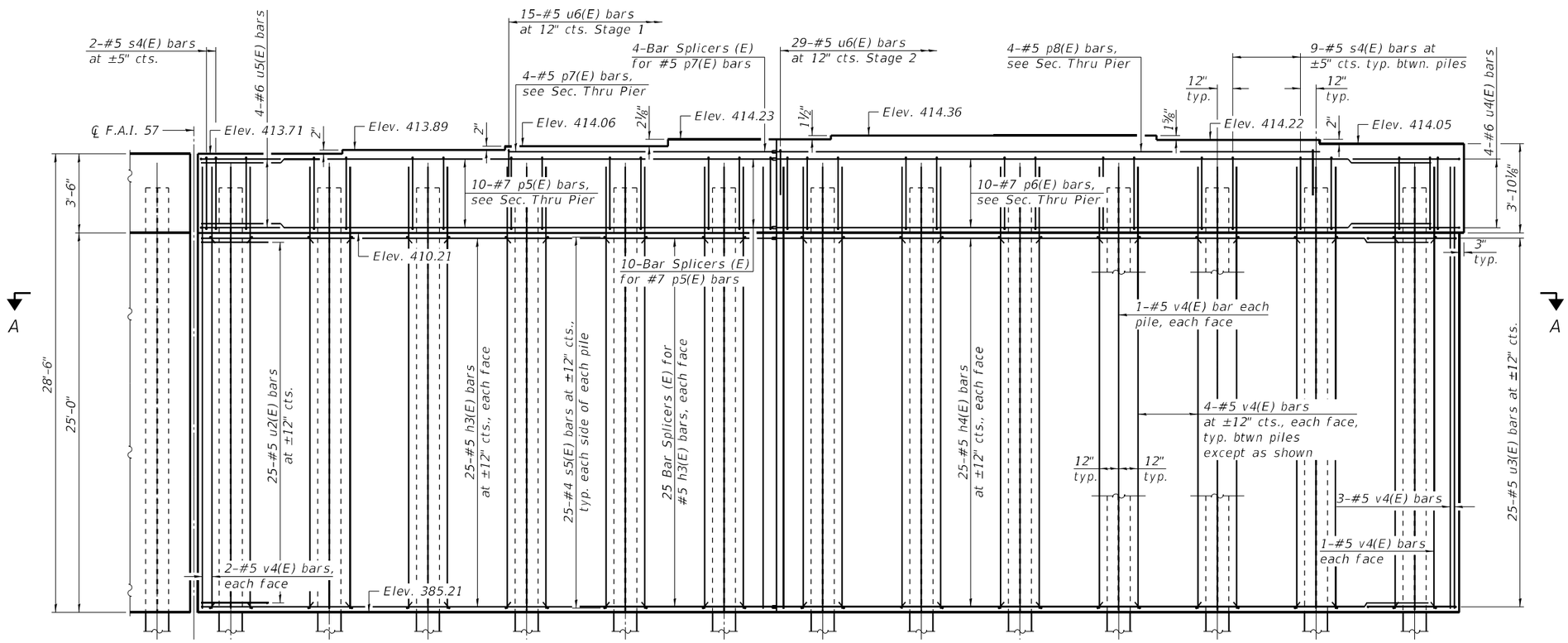

ELEVATION
(Looking South)

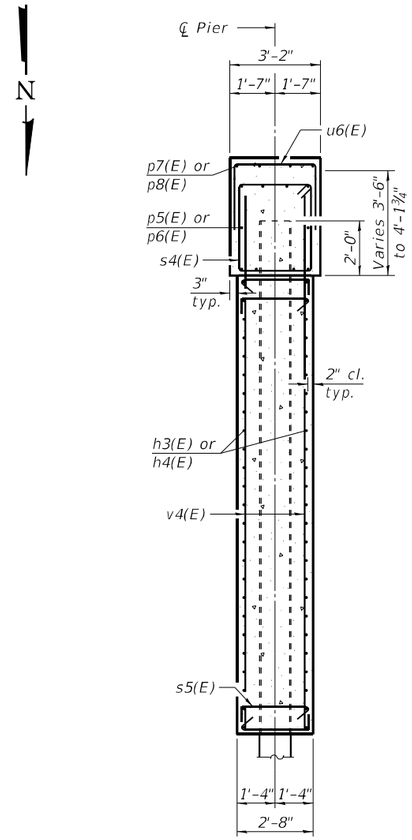

SECTION THRU PIER

PILE DATA

Type: HP 14x102 with Pile Shoes
Nominal Required Bearing: 810 kips
Factored Resistance Available: 445 kips
Est. Length: 60 ft
No. Production Piles: 12
No. Test Piles: 1

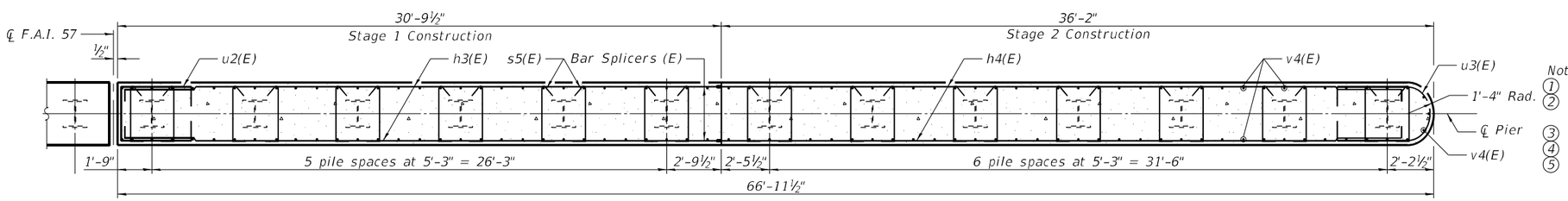

SECTION A-A

Notes:

1. Pour steps monolithically with cap.
2. See sheet 34 of 39 for additional pier details and Bill of Material.
3. For details of piles, see sheet 35 of 39.
4. For bar splicer details, see sheet 36 of 39.
5. For cofferdam limits, see sheet 34 of 39.

FILE NAME: H:\P222064 - IDOT PTB 203 Item 49 District 9 V-x\222064.011 - 157 over Gun\Microstation\0280093_0094-78884-033-Pier-S.B.dgn

OATES ASSOCIATES
www.oatesassociates.com
ILLINOIS DESIGN FIRM LICENSE NO.: 184.001115

USER NAME =	DESIGNED - ORG	REVISED -	
	CHECKED - KBC	REVISED -	
PLOT SCALE =	DRAWN - ORG	REVISED -	
PLOT DATE = 12/13/2024	CHECKED - KBC	REVISED -	

STATE OF ILLINOIS
DEPARTMENT OF TRANSPORTATION

PIER - S.B.
STRUCTURE NO. 028-0094 (S.B.)

SHEET 33 OF 39 SHEETS

F.A.I. RTE.	SECTION	COUNTY	TOTAL SHEETS	SHEET NO.
57	(28-1)B-2	FRANKLIN	598	334
		CONTRACT NO. 78884		
		ILLINOIS	FED. AID PROJECT	

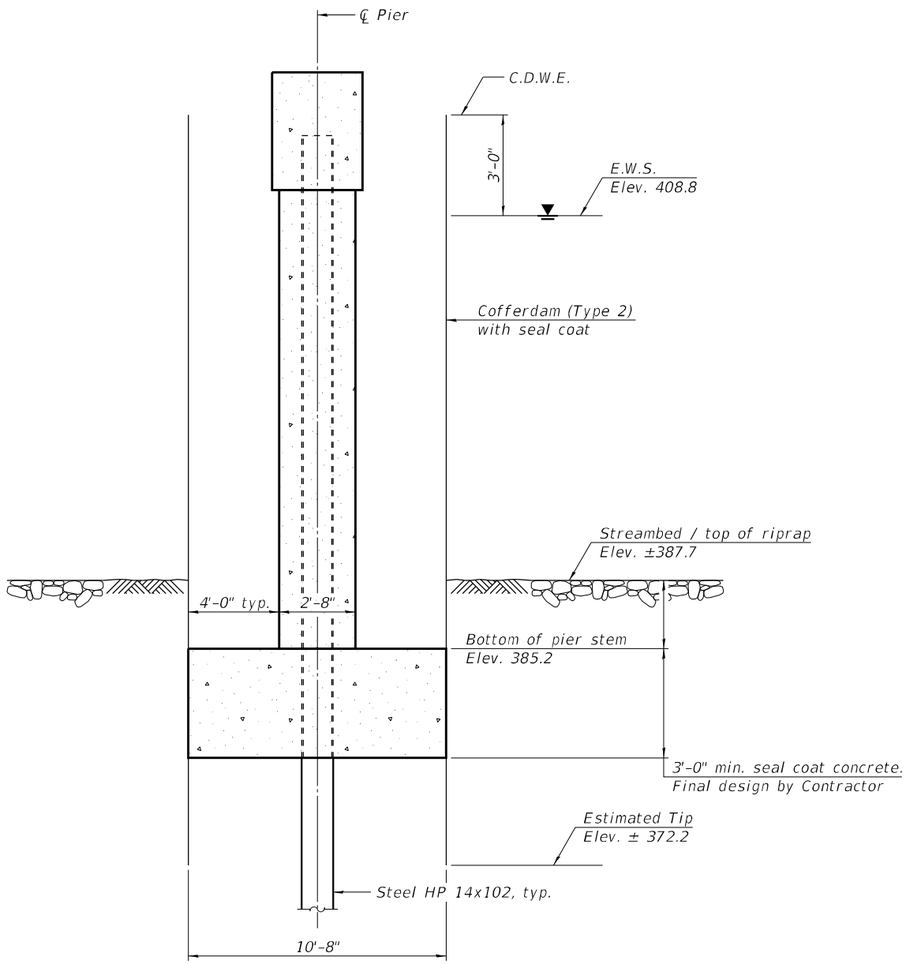

Cofferdam and Seal Coat

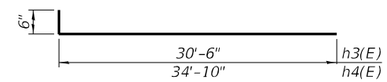

BARS h3(E) & h4(E)

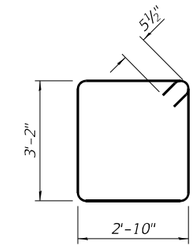

BAR s4(E)

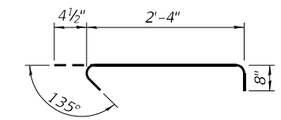

BAR s5(E)

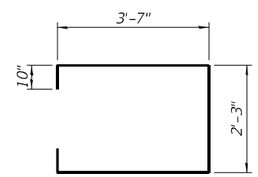

BAR u2(E)

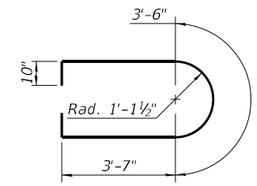

BAR u3(E)

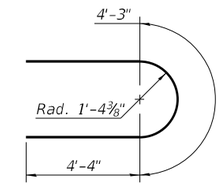

BAR u4(E)

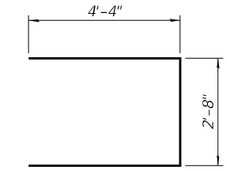

BAR u5(E)

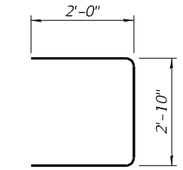

BAR u6(E)

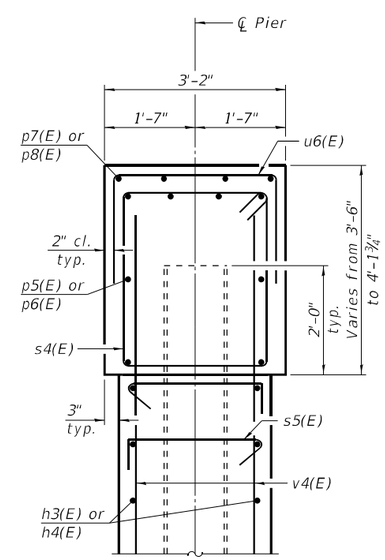

SECTION B-B

NORTHBOUND & SOUTHBOUND
PIERS - BILL OF MATERIAL

Bar	No.	Size	Length	Shape
h3(E)	100	#5	31'-0"	
h4(E)	100	#5	35'-4"	
p5(E)	20	#7	30'-6"	
p6(E)	20	#7	34'-10"	
p7(E)	8	#5	14'-2"	
p8(E)	8	#5	28'-7"	
s4(E)	224	#5	12'-11"	
s5(E)	1300	#4	3'-5"	
u2(E)	50	#5	11'-1"	
u3(E)	50	#5	12'-4"	
u4(E)	8	#6	12'-11"	
u5(E)	8	#6	11'-4"	
u6(E)	88	#5	6'-10"	
v4(E)	262	#5	28'-2"	
Cofferdam Excavation			Cu. Yd.	282
Concrete Structures			Cu. Yd.	390.2
Reinforcement Bars, Epoxy Coated			Pound	25,770
Furnishing Steel Piles, HP 14x102			Foot	1,440
Driving Piles			Foot	1,440
Test Pile Steel, HP 14x102			Each	2
Pile Shoes			Each	26
Seal Coat Concrete			Cu. Yd.	169.3
Cofferdam (Type 2) (Location - 4)			Each	1
Cofferdam (Type 2) (Location - 5)			Each	1
Cofferdam (Type 2) (Location - 6)			Each	1

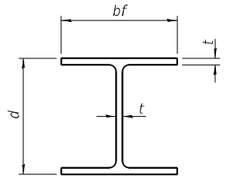

STEEL PILE TABLE

Designation	Depth d	Flange width bf	Web and Flange thickness t	Encasement diameter A
HP 14x117	14¼"	14⅞"	13/16"	30"
x102	14"	14¾"	11/16"	30"
x89	13⅞"	14¾"	⅝"	30"
x73	13⅝"	14⅝"	½"	30"
HP 12x84	12¼"	12¼"	11/16"	24"
x74	12⅛"	12¼"	⅝"	24"
x63	12"	12⅛"	½"	24"
x53	11¾"	12"	7/16"	24"
HP 10x57	10"	10¼"	9/16"	24"
x42	9¾"	10⅛"	7/16"	24"
HP 8x36	8"	8⅛"	7/16"	18"

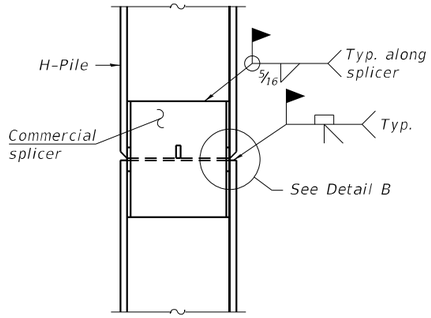

ELEVATION

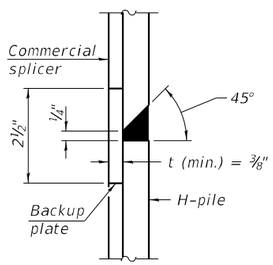

DETAIL "B"

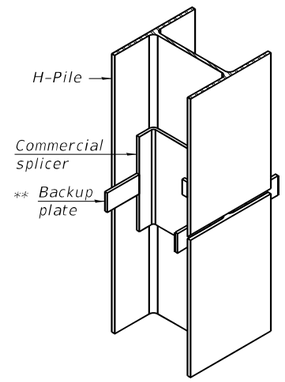

ISOMETRIC VIEW

WELDED COMMERCIAL SPLICE

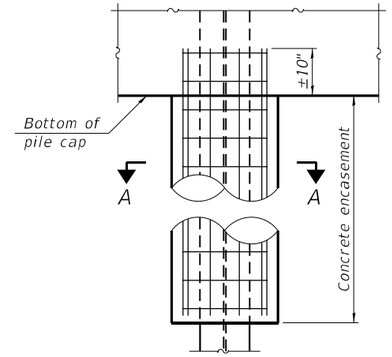

ELEVATION

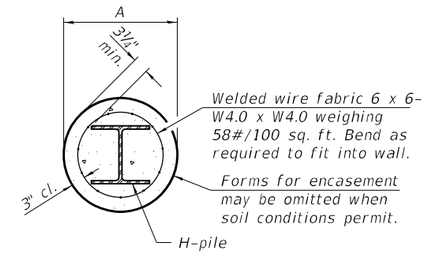

SECTION A-A

INDIVIDUAL PILE CONCRETE ENCASEMENT

(when specified)

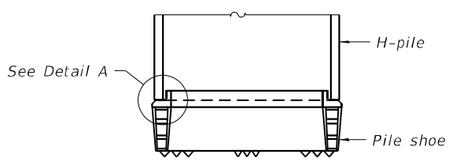

ELEVATION

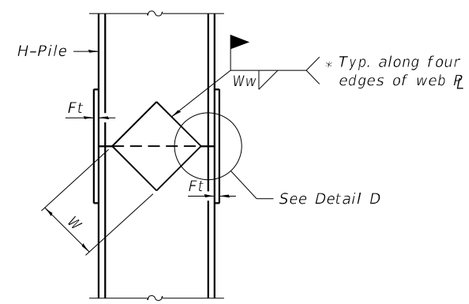

ELEVATION

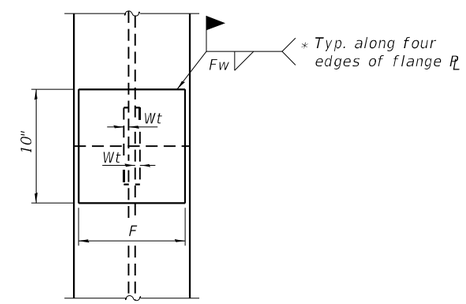

END VIEW

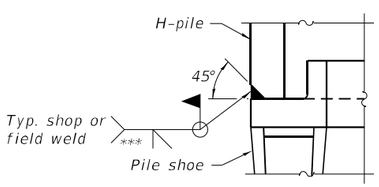

DETAIL A

SHOE ATTACHMENT

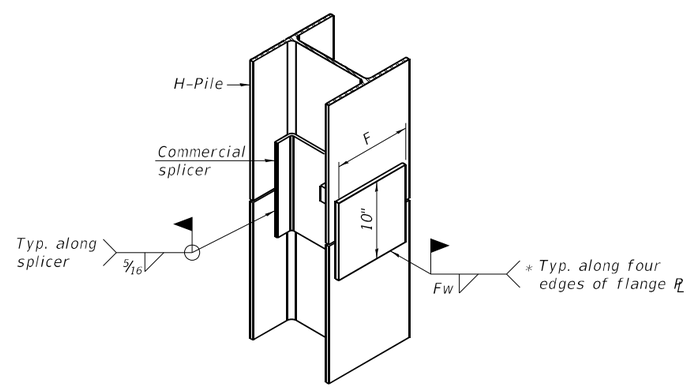

ISOMETRIC VIEW

WELDED COMMERCIAL SPLICE ALTERNATE

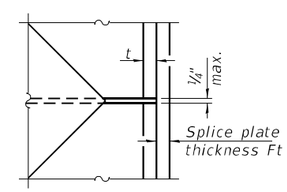

DETAIL D

Designation	F	Ft	Fw	W	Wt	Ww
HP 14x117	12½"	1¼"	⅞"	7¾"	⅝"	½"
x102	12½"	1"	¾"	7¾"	⅝"	½"
x89	12½"	⅞"	11/16"	7¾"	⅝"	½"
x73	12½"	¾"	9/16"	7¾"	⅝"	½"
HP 12x84	10"	1"	11/16"	6½"	⅝"	½"
x74	10"	⅞"	11/16"	6½"	⅝"	½"
x63	10"	¾"	½"	6½"	½"	⅜"
x53	10"	¾"	½"	6½"	½"	⅜"
HP 10x57	8"	⅞"	9/16"	5¼"	½"	⅜"
x42	8"	¾"	9/16"	5¼"	½"	⅜"
HP 8x36	6¾"	⅝"	7/16"	4"	½"	⅜"

WELDED PLATE FIELD SPLICE

Note:
The steel H-piles shall be according to AASHTO M270 Grade 50.

* Interrupt welds ¼" from end of web and/or each flange.

** Remove portions of backup plates that extend outside the flanges.

*** Weld size per pile shoe manufacturer (5/16" min.).

F-HP 10-27-2023

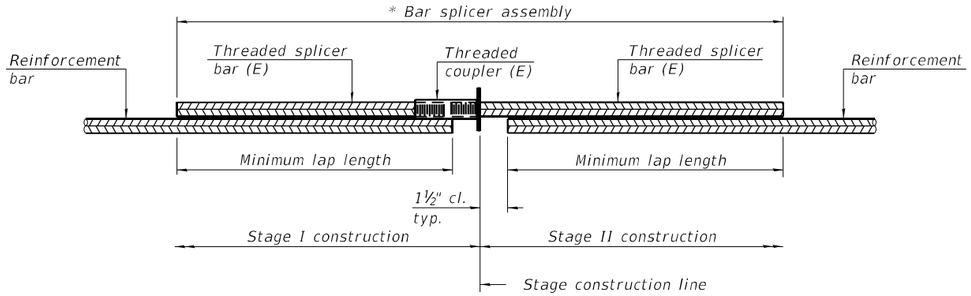

STANDARD BAR SPLICER ASSEMBLY PLAN

Only bar splicer assemblies as presented on the approved QPL list may be used.

Threaded splicer bar length = min. lap length + 1½" + thread length

* Epoxy not required on Bar Splicer Assembly components used in conjunction with black bars.

Location	Bar size	No. assemblies required	Minimum lap length
Abutment Cap	#7	40	5'-0"
Abutment Cap Steps	#5	16	3'-7"
Approach Slab Top	#5	184	3'-4"
Approach Slab Bottom	#8	240	4'-9"
Approach Slab Footing	#5	160	3'-2"
Deck	#5	1118	3'-6"
Integral Diaphragms, Back Face	#6	16	4'-0"
Integral Diaphragms, Front Face	#6	12	4'-0"
Pier Cap	#7	20	5'-6"
Pier Cap Steps	#5	8	3'-7"
Pier Wall	#5	100	3'-7"

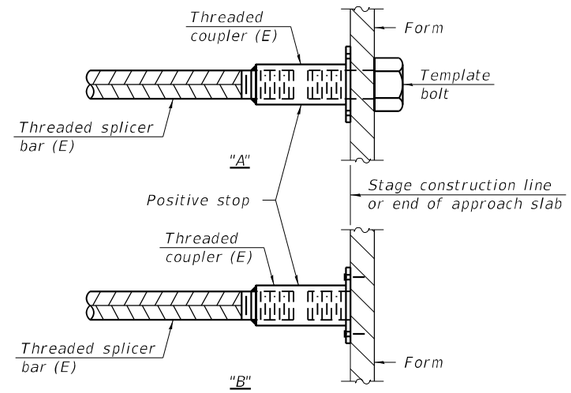

INSTALLATION AND SETTING METHODS

"A" : Set bar splicer assembly by means of a template bolt.
"B" : Set bar splicer assembly by nailing to wood forms or cementing to steel forms.
(E) : Indicates epoxy coating.

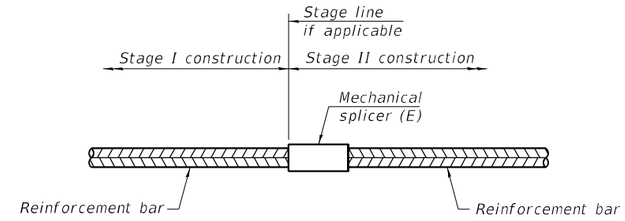

STANDARD MECHANICAL SPLICER

Location	Bar size	No. assemblies required

Notes:
Splicer bars shall be deformed with threaded ends and have a minimum 60 ksi yield strength.
All reinforcement shall be lapped and tied to the splicer bars.
Bar splicer assemblies shall be epoxy coated according to the requirements for reinforcement bars. See Section 508 of the Standard Specifications.
See approved list of bar splicer assemblies and mechanical splicers for alternatives.

BSD-1 5-15-2023

Illinois Department of Transportation
Division of Highways
District 9

SOIL BORING LOG

Date 4/9/19

ROUTE I-57 DESCRIPTION Structures over Gun Creek LOGGED BY L. Estel

SECTION (28-1)B-2 LOCATION Mile Post 78.9 (Median near North Abutments), SEC. 7, TWP. 5S, RNG. 3E, PM

COUNTY Franklin DRILLING METHOD Hollow stem auger (8" O.D., 3.25" I.D.) HAMMER TYPE Auto SPT 140 lbs

STRUCT. NO. 028-0013 & 028-0014
Station 102+70

BORING NO. 1-S
Station 101+78
Offset 16.0ft I.T of Med. Alignment
Ground Surface Elev. 417.7 ft

Surface Water Elev. 409.5 ft
Stream Bed Elev. 390.1 ft

Groundwater Elev.:
First Encounter 396.2 ft
Upon Completion ft
After Hrs. ft

Description	Elev.	DEPTH (ft)	BLOWS	UCS Qu (tsf)	MOIST (%)
V. Stiff Brown, Moist SILTY CLAY			1		
			3	3.1	17
			3	B	
Soft Brown, Moist SILTY LOAM	413.70		2		
		-5	6	0.3	14
			3	S	
			2		
			3	0.2	16
			3	S	
			4		
		-10	6	0.2	15
			5	S	
			2		
			4	0.3	16
			3	S	
Stiff Brown, Moist SILTY LOAM	403.20		2		
		-15	5	1.5	17
			4	B	
V. Stiff Brownish Grey, Moist SILTY CLAY LOAM	401.20		2		
			5	2.1	17
			5	B	
	398.70		1		
		-20	3	0.6	26

Description	Elev.	DEPTH (ft)	BLOWS	UCS Qu (tsf)	MOIST (%)
M. Stiff Grey, Moist SILTY CLAY LOAM with ORGANICS PI > 12 (Est. based on visual ID and historical data) *(continued)*	396.20		4	B	
			1		
M. Stiff Grey and mottled Brown, Moist to Wet SILTY CLAY to CLAY PI > 12 (Est. based on visual ID and historical data)			1	1	26
			3	B	
			WOH		
		-25	1	0.9	28
			1	B	
			WOH		
			WOH	0.7	27
			1	B	
			WOH		
		-30	1	0.7	29
			1	E	
			WOH		
			WOH	0.5	26
			WOH	B	
			WOH		
		-35	1	0.9	27
			1	B	
			2		
			3	0.9	31
			3	B	
	378.70				
		-40	1		

The Unconfined Compressive Strength (UCS) Failure Mode is indicated by (B-Bulge, S-Shear, P-Penetrometer, E-Estimated)
Abbreviations W.O.H - Sampler Advanced By Weight of Hammer, W.O.P - Advanced by Weight of Pipe, B.S. - Before Seating
The SPT (N value) is the sum of the last two blow values in each sampling zone (AASHTO T206) BBS, from 137 (Rev. 8-99)

File Name S:\MATERIALS GEOTECHNICAL UNIT\BORING LOGS USING GINT\STATE STRUCTURES\FRANKLIN\028-0013 & 14 I57 OVER GUN CREEK 2019.GPJ Data Template DITEMPLT.GDT Date/Printed: 11/19/19
Latitude: 38.1004871 Longitude: -88.9116877 Datum NAD83 Job Number

Illinois Department of Transportation
Division of Highways
District 9

SOIL BORING LOG

Date 4/9/19

ROUTE I-57 DESCRIPTION Structures over Gun Creek LOGGED BY L. Estel

SECTION (28-1)B-2 LOCATION Mile Post 78.9 (Median near North Abutments), SEC. 7, TWP. 5S, RNG. 3E, PM

COUNTY Franklin DRILLING METHOD Hollow stem auger (8" O.D., 3.25" I.D.) HAMMER TYPE Auto SPT 140 lbs

STRUCT. NO. 028-0013 & 028-0014
Station 102+70

BORING NO. 1-S
Station 101+78
Offset 16.0ft I.T of Med. Alignment
Ground Surface Elev. 417.7 ft

Surface Water Elev. 409.5 ft
Stream Bed Elev. 390.1 ft

Groundwater Elev.:
First Encounter 396.2 ft
Upon Completion ft
After Hrs. ft

Description	Elev.	DEPTH (ft)	BLOWS	UCS Qu (tsf)	MOIST (%)
Stiff Brown and Grey, Moist to Wet SILTY CLAY to CLAY PI > 12 (Est. based on visual ID and historical data) *(continued)*			3	1.6	32
			3	B	
M. Stiff dark Grey, Moist CLAY LOAM PI > 12 (Est. based on visual ID and historical data)	373.20	-45	1		
			2	0.6	28
			2	B	
Soft dark Grey, Moist SILTY LOAM % Fines < #200: 75%, PI = 10, LL = 27 (Est. based on visual ID and historical data)	368.20	-50	1		
			6	0.4	19
			5	B	
Loose Grey, Moist fine SANDY LOAM (non-plastic) 77% SAND, 14% SILT, 6% CLAY (Lab 23)	363.20	-55	WOH		
			1		22
			3		
Bottom of hole @ 72.0 ft					
Elevation referenced to BM 8, Sawed Square at NW Corner of SN 028-0013; EL. 417.62					
To convert "N" values to "N60", multiply by 1.5		-60			

Description	Elev.	DEPTH (ft)	BLOWS	UCS Qu (tsf)	MOIST (%)
	356.70		1		
Dense Grey, Moist fine SAND to weathered SANDSTONE	355.70		41		
			50		
Borehole continued with rock coring.					
		-65			
		-70			
		-75			
		-80			

The Unconfined Compressive Strength (UCS) Failure Mode is indicated by (B-Bulge, S-Shear, P-Penetrometer, E-Estimated)
Abbreviations W.O.H - Sampler Advanced By Weight of Hammer, W.O.P - Advanced by Weight of Pipe, B.S. - Before Seating
The SPT (N value) is the sum of the last two blow values in each sampling zone (AASHTO T206) BBS, from 137 (Rev. 8-99)

File Name S:\MATERIALS GEOTECHNICAL UNIT\BORING LOGS USING GINT\STATE STRUCTURES\FRANKLIN\028-0013 & 14 I57 OVER GUN CREEK 2019.GPJ Data Template DITEMPLT.GDT Date/Printed: 11/19/19
Latitude: 38.1004871 Longitude: -88.9116877 Datum NAD83 Job Number

Illinois Department of Transportation
Division of Highways
District 9

ROCK CORE LOG

Date 4/9/19

ROUTE I-57 DESCRIPTION Structures over Gun Creek LOGGED BY L. Estel

SECTION (28-1)B-2 LOCATION Mile Post 78.9 (Median near North Abutments), SEC. 7, TWP. 5S, RNG. 3E, PM

COUNTY Franklin CORING METHOD Conventional rotary with water

STRUCT. NO. 028-0013 & 028-0014
Station 102+70

CORING BARREL TYPE & SIZE NV3 5FT NWJ

Core Diameter 2 in
Top of Rock Elev. 355.70 ft
Begin Core Elev. 355.70 ft

BORING NO. 1-S
Station 101+78
Offset 16.0ft I.T of Med. Alignment
Ground Surface Elev. 417.7 ft

Description	Elev.	DEPTH (ft)	CORE (#)	RECOVERY (%)	R.Q.D. (%)	CORE TIME (min/ft)	STRENGTH (tsf)
Light Brown and Grey SANDSTONE, Dry, Fined Grained, Thin Bedded, Moderately Hard Field Hardness	355.70		1	95	25	5.4	
		-65					53.6
Light Grey with Brown SANDSTONE, Dry, Fined Grained, Thin Bedded, Moderately Hard Field Hardness			2	88	79	4.8	87
							103.6
							97.3
							76.3
		-70					155
							211.2
	345.70						
(End of boring)							
		76					
		-80					

Color pictures of the cores Yes, attached
Cores will be stored for examination until Const. complete
The "Strength" column represents the uniaxial compressive strength of the core sample (ASTM D-2938)
RQD is the ratio of the total length of sound core specimens >4" to total length of core run **BBS, form 138 (Rev. 8-99)**

ROCK CORE 028-0013 & 14 I57 OVER GUN CREEK 2019.GPJ DITEMPLT.GDT 11/19/19

FILE NAME: H:\P\222064 - IDOT PTB 203 Item 49 District 9 V-V\222064.011 - I57 over Gun\Microstation\0280093_0094-78884-037- Soil Boring Logs.dgn

OATES ASSOCIATES
www.oatesassociates.com
ILLINOIS DESIGN FIRM LICENSE NO.: 184.001115

USER NAME =	DESIGNED -	REVISED -
	CHECKED -	REVISED -
PLOT SCALE =	DRAWN -	REVISED -
PLOT DATE = 12/13/2024	CHECKED -	REVISED -

STATE OF ILLINOIS
DEPARTMENT OF TRANSPORTATION

SOIL BORING LOGS
STRUCTURE NO. 028-0093 & 028-0094

SHEET 37 OF 39 SHEETS

F.A.I. RTE.	SECTION	COUNTY	TOTAL SHEETS	SHEET NO.
57	(28-1)B-2	FRANKLIN	598	338
		CONTRACT NO. 78884		
	ILLINOIS	FED. AID PROJECT		

Illinois Department of Transportation
Division of Highways
District 9

SOIL BORING LOG

Page 1 of 2

Date 10/3/19

ROUTE I-57 DESCRIPTION Structures over Gun Creek LOGGED BY L. Estel

SECTION (28-1)B-2 LOCATION Mile Post 78.9 (Median near South Abutments), SEC. 7, TWP. 5S, RNG. 3E, PM

COUNTY Franklin DRILLING METHOD Hollow stem auger (8" O.D., 3.25" I.D.) HAMMER TYPE Auto SPT 140 lbs

STRUCT. NO. 028-0013 & 028-0014
Station 102+70

BORING NO. 2-S
Station 103+75
Offset 14.0ft RT of Med. Alignment
Ground Surface Elev. 417.0 ft

Surface Water Elev. 405.2 ft
Stream Bed Elev. 390.1 ft

Groundwater Elev.:
∇ First Encounter 399.0 ft
▽ Upon Completion ft
▼ After ___ Hrs. ft

Description	Elev.	DEPTH (ft)	BLOWS	UCS Qu (tsf)	MOIST (%)
Soft Brown, Dry to Moist SILTY LOAM			5		
			10	0.5	6
			8	P	
			2		
		-5	2	0.5	10
			3	P	
V. Soft Brown, Dry to Moist SILTY LOAM	411.00		2		
			5	0.1	16
			7	S	
Stiff Brown, Moist SILTY CLAY LOAM	408.50		5		
			5	1.8	19
		-10	4	S	
Stiff Brown and mottled Grey with specks of Brown, Moist SILTY CLAY LOAM	406.00		1		
			3	1.6	22
			4	B	
Stiff Grey, Moist SILTY CLAY	403.50		2		
			4	1.8	24
		-15	4	B	
M. Stiff Grey, Moist SILTY LOAM PI = 8, LL = 29, 6% SAND, 80% SILT, and 14% CLAY (Est. based on Lab 54) ∇	401.00		2		
			7	0.5	15
			6	S	
Stiff Grey, Moist CLAY LOAM PI > 12 (Est. based on visual ID and historical data)	398.50		1		
			3	1.8	20
		-20	4	B	
M. Stiff Grey, Moist SILTY CLAY LOAM with ORGANICS PI > 12 (Est. based on visual ID and historical data)	396.00		1		
			5	0.8	25
			5	S	
Soft Grey, V. Moist SILTY LOAM PI = 8, LL = 29, 6% SAND, 80% SILT, and 14% CLAY (Lab 54)	393.50		WOH		
			WOH	0.3	27
		-25	WOH	E	
Grey and Brown			WOH		
			WOH	0.1	29
			WOH	B	
Stiff Brown and Grey with specks of Red, Moist SILTY CLAY LOAM PI > 12 (Est. based on visual ID and historical data)	388.50		1		
			2	1.4	25
		-30	3	B	
M. Stiff Brown and Grey with specks of Red, Moist SILTY CLAY LOAM PI > 12 (Est. based on visual ID and historical data)	386.00		1		
			3	0.8	25
			3	B	
			1		
			2	1.0	26
		-35	4	B	
Stiff Brown and Grey with specks of Red, Moist SILTY CLAY PI > 12 (Est. based on visual ID and historical data)	381.00		1		
			2	1.9	25
			4	B	
Stiff Grey, Moist CLAY PI > 12 (Est. based on visual ID and historical data)	378.50		1		
			3	1.8	27
		-40	3	B	

The Unconfined Compressive Strength (UCS) Failure Mode is indicated by (B-Bulge, S-Shear, P-Penetrometer, E-Estimated)
Abbreviations W.O.H - Sampler Advanced By Weight of Hammer, W.O.P - Advanced by Weight of Pipe, B.S. - Before Seating
The SPT (N value) is the sum of the last two blow values in each sampling zone (AASHTO T206) BBS, from 137 (Rev. 8-99)

File Name S:\MATERIALS GEOTECHNICAL\INTBORING LOGS USING GINT\STATE STRUCTURES\FRANKLIN\028.0013 & 14 I57 OVER GUN CREEK 2019 GPJ Data Template DISTEMPLT.GDT Date Printed 11/19/19
Latitude 38.099947 Longitude -88.911814 Datum NAD83 Job Number

Illinois Department of Transportation
Division of Highways
District 9

SOIL BORING LOG

Page 2 of 2

Date 10/3/19

ROUTE I-57 DESCRIPTION Structures over Gun Creek LOGGED BY L. Estel

SECTION (28-1)B-2 LOCATION Mile Post 78.9 (Median near South Abutments), SEC. 7, TWP. 5S, RNG. 3E, PM

COUNTY Franklin DRILLING METHOD Hollow stem auger (8" O.D., 3.25" I.D.) HAMMER TYPE Auto SPT 140 lbs

STRUCT. NO. 028-0013 & 028-0014
Station 102+70

BORING NO. 2-S
Station 103+75
Offset 14.0ft RT of Med. Alignment
Ground Surface Elev. 417.0 ft

Surface Water Elev. 405.2 ft
Stream Bed Elev. 390.1 ft

Groundwater Elev.:
∇ First Encounter 399.0 ft
▽ Upon Completion ft
▼ After ___ Hrs. ft

Description	Elev.	DEPTH (ft)	BLOWS	UCS Qu (tsf)	MOIST (%)
Stiff Grey, Moist CLAY PI > 12 (Est. based on visual ID and historical data) *(continued)*					
M. Stiff Grey, Moist SILTY CLAY LOAM PI > 12 (Est. based on visual ID and historical data)	373.00		WOH		
		-45	WOH	0.6	28
			WOH	S	
Stiff Grey, Moist SILTY CLAY LOAM PI > 12 (Est. based on visual ID and historical data)	368.00		2		
		-50	5	1.9	20
			7	B	
Hard Brown, Dry weathered SANDSTONE	363.00		100/4"		
		-55			
		-60			

Bottom of hole at 54.3 ft

Elevation referenced to BM 8, Sawed Square at NW Corner of SN 028-0013; EL. 417.62

To convert "N" values to "N60", multiply by 1.5

DEPTH (ft)
-65
-70
-75
-80

The Unconfined Compressive Strength (UCS) Failure Mode is indicated by (B-Bulge, S-Shear, P-Penetrometer, E-Estimated)
Abbreviations W.O.H - Sampler Advanced By Weight of Hammer, W.O.P - Advanced by Weight of Pipe, B.S. - Before Seating
The SPT (N value) is the sum of the last two blow values in each sampling zone (AASHTO T206) BBS, from 137 (Rev. 8-99)

File Name S:\MATERIALS GEOTECHNICAL\INTBORING LOGS USING GINT\STATE STRUCTURES\FRANKLIN\028.0013 & 14 I57 OVER GUN CREEK 2019 GPJ Data Template DISTEMPLT.GDT Date Printed 11/19/19
Latitude 38.099947 Longitude -88.911814 Datum NAD83 Job Number

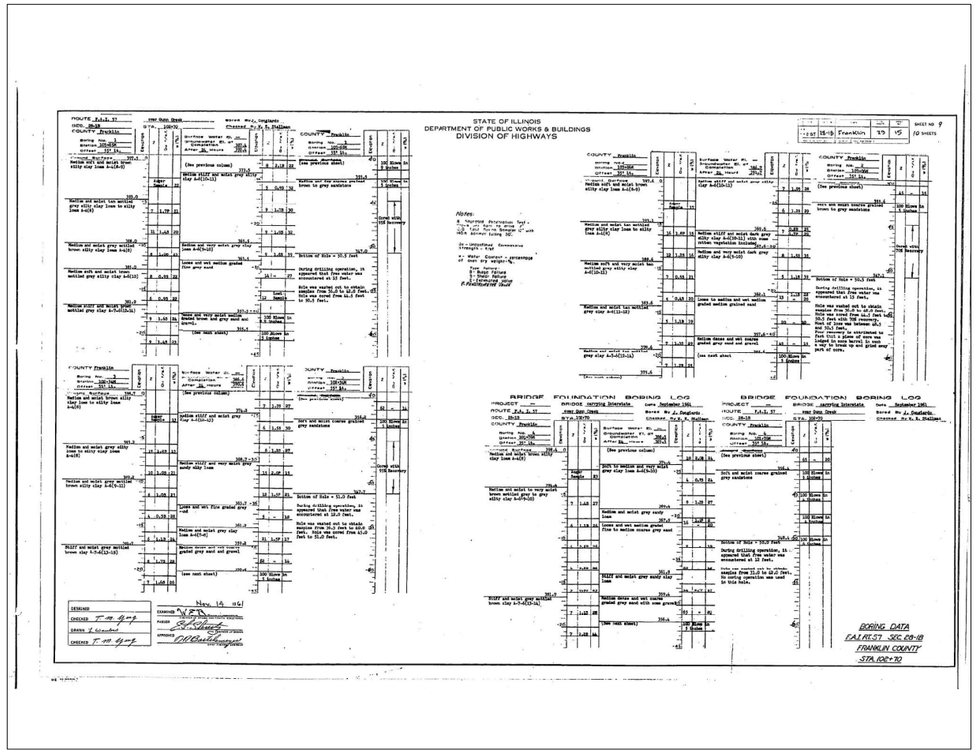

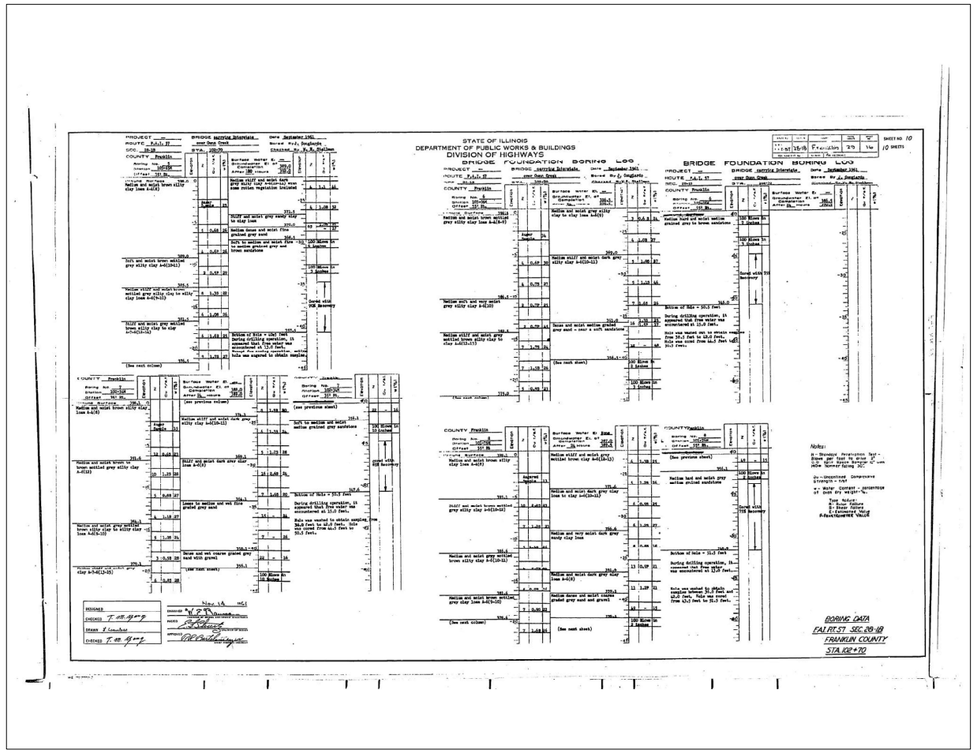

FILE NAME: H:\P\222064 - IDOT PTB 203 Item 49 District 9 V-V\222064.011 - I57 over Gun\Microstation\0280093_0094-78884-039- Soil Boring Logs.dgn

OATES ASSOCIATES
www.oatesassociates.com
ILLINOIS DESIGN FIRM LICENSE NO.: 184.001115

USER NAME =	DESIGNED -	REVISED -	
	CHECKED -	REVISED -	
PLOT SCALE =	DRAWN -	REVISED -	
PLOT DATE = 12/13/2024	CHECKED -	REVISED -	

STATE OF ILLINOIS
DEPARTMENT OF TRANSPORTATION

SOIL BORING LOGS
STRUCTURE NO. 028-0093 & 028-0094

SHEET 39 OF 39 SHEETS

F.A.I. RTE.	SECTION	COUNTY	TOTAL SHEETS	SHEET NO.
57	(28-1)B-2	FRANKLIN	598	340
		CONTRACT NO. 78884		
		ILLINOIS	FED. AID PROJECT	

Bench Mark: Chiseled square on the northwest wingwall of SN 028-0012, Sta. 303+40, 23' LT., Elev. 421.77.

Existing Structure: SN 028-0011 (S.B.) and 028-0012 (N.B.) were originally built in 1962 as F.A.I. 57, Section 28-2B. The deck and bearings were replaced in 1993 for SN 028-0012 (N.B.) as Section (28-2B)D and 1994 for SN 028-0011 (S.B.) as Section (28-2B)D-1. The back to back abutment length is 127'-6" and the out to out deck width is 43'-2". Each structure consists of a three span steel 27WF superstructure (composite in positive bending areas) supported by concrete stub abutments founded on steel H-piles and solid wall piers on steel H-pile supported footings.

Traffic Control: Two traffic lanes will be maintained in each direction by utilizing staged construction.

Salvage: None.

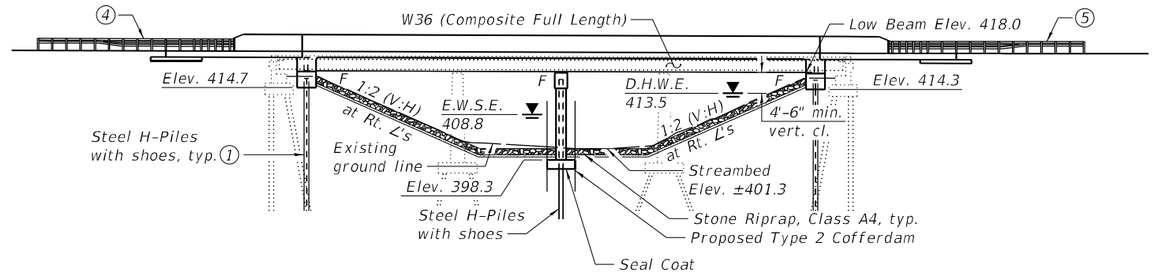

ELEVATION

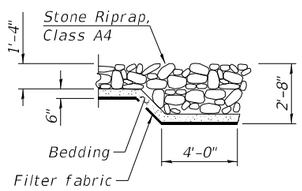

SECTION A-A

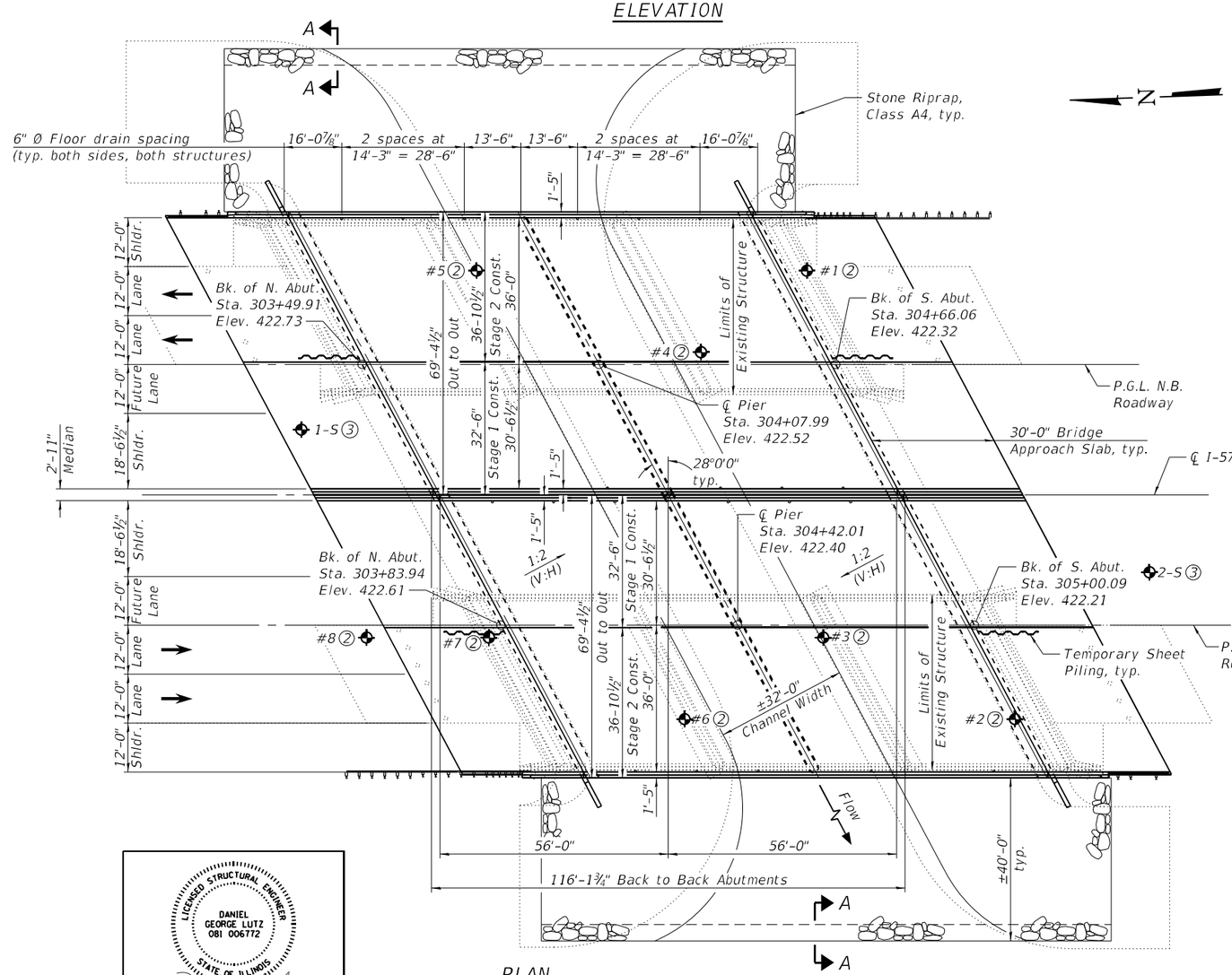

PLAN

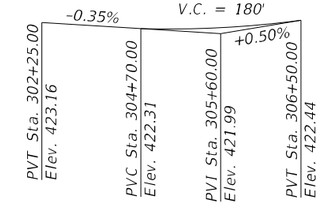

PROFILE GRADE

(Along P.G.L of N.B roadway, shows final grade after grinding)

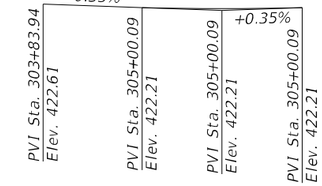

PROFILE GRADE

(Along P.G.L of S.B roadway, shows final grade after grinding)

LOADING HL-93

Allow 50#/sq. ft. for future wearing surface.

DESIGN SPECIFICATIONS

2020 AASHTO LRFD Bridge Design Specifications, 9th Edition

DESIGN STRESSES

FIELD UNITS

f'c = 3,500 psi (Substructure)
f'c = 4,000 psi (Superstructure)
fy = 60,000 psi (Reinforcement)
fy = 50,000 psi (M270 Grade 50)
fy = 36,000 psi (M270 Grade 36)

SEISMIC DATA

Seismic Performance Zone (SPZ) = 3
Design Spectral Acceleration at 1.0 sec. (SD1) = 0.320g
Design Spectral Acceleration at 0.2 sec. (SDS) = 0.753g
Soil Site Class = D

STA. 304+07.99
BUILT 20__ BY
STATE OF ILLINOIS
F.A.I. RT. 57
SEC. (28-2)B-2;(28-1)B-2
LOADING HL-93
STR. NO. 028-0091

STA. 304+42.01
BUILT 20__ BY
STATE OF ILLINOIS
F.A.I. RT. 57
SEC. (28-2)B-2;(28-1)B-2
LOADING HL-93
STR. NO. 028-0090

NAME PLATE
See Std. 515001

Notes:
① Space piles to miss existing battered piles.
② 1961 Boring
③ 2019 Boring
④ Traffic Barrier Terminal
Type 5, Std. 631026 (N.B. Structure)
Type 6, Std. 631031 (S.B. Structure)
⑤ Traffic Barrier Terminal
Type 5, Std. 631026 (S.B. Structure)
Type 6, Std. 631031 (N.B. Structure)
⑥ Up to ¼ inch may be ground off the bridge deck and the bridge approach slabs.
⑦ Elevations shown in plan represent elevations after grinding.

LICENSED STRUCTURAL ENGINEER
DANIEL GEORGE LUTZ
081 006772
STATE OF ILLINOIS

DATE: 10/11/2024
EXPIRATION: 11/30/2024

APPROVED
For Structural Adequacy Only
Engineer of Bridges & Structures

3rd P.M.

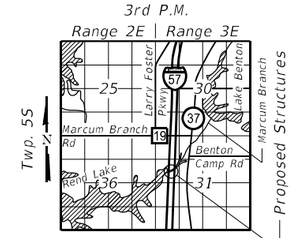

LOCATION SKETCH

I-57 OVER MARCUM BRANCH
F.A.I. RTE. 57 - SEC. (28-2)B-2
FRANKLIN COUNTY
STA. 304+25.00
STRUCTURE NO. 028-0090 (S.B.)
STRUCTURE NO. 028-0091 (N.B.)

OATES ASSOCIATES
www.oatesassociates.com
ILLINOIS DESIGN FIRM LICENSE NO.: 184.001115

USER NAME =	DESIGNED -	REVISED -
	CHECKED -	REVISED -
PLOT SCALE =	DRAWN - KP	REVISED -
PLOT DATE = 12/13/2024	CHECKED -	REVISED -

STATE OF ILLINOIS
DEPARTMENT OF TRANSPORTATION

GENERAL PLAN & ELEVATION
STRUCTURE NO. 028-0090 (S.B.) & 028-0091 (N.B.)
SHEET 1 OF 41 SHEETS

F.A.I. RTE.	SECTION	COUNTY	TOTAL SHEETS	SHEET NO.
57	(28-2)B-2	FRANKLIN	598	341
		CONTRACT NO. 78884		
		ILLINOIS	FED. AID PROJECT	

FILE NAME: H:\PL221053 - D9 Various Various PTB 199-038.221053.017-I-57 over Marcum\Microstation\0280090_0091-78884-001-General Plan & Elevation.dgn

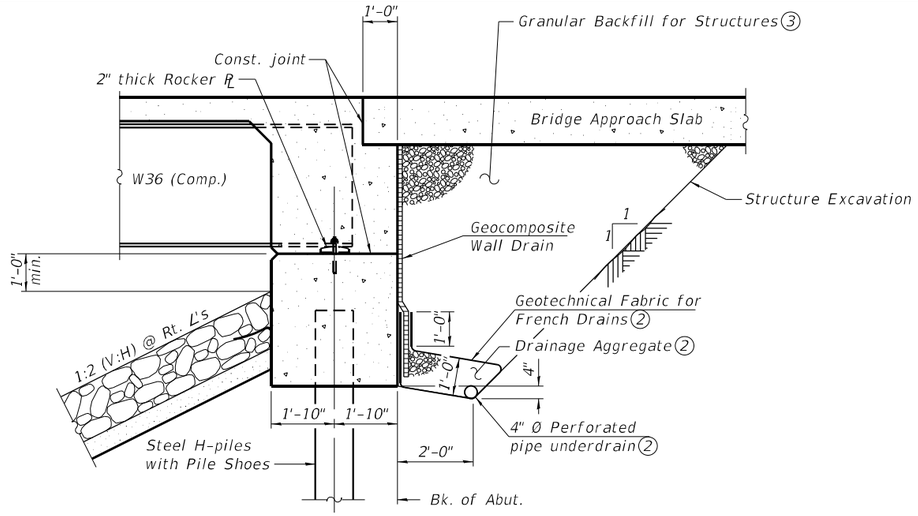

SECTION THRU INTEGRAL ABUTMENT ①

Notes:

① All drainage system components shall extend to 2'-0" from the end of each wingwall except an outlet pipe shall extend until intersecting with the side slopes. The pipes shall drain into concrete headwalls. See Article 601.05 of the Standard Specifications and Highway Standard 601101.

② Included in the cost of Pipe Underdrains for Structures.

③ Granular Backfill for Structures shall follow Article 586 of the Standard Specifications, and the Coarse Aggregate shall be Grade CA 7, CA 11, or CA 14. Granular backfill behind the abutments shall be compacted according to Article 205.06 of the Standard Specifications.

GENERAL NOTES

Fasteners shall be ASTM F 3125 Grade A325 Type 1, hot dip galvanized bolts in metallized areas. Bolts ⅞ in. diameter, holes 15/16 in. diameter, unless otherwise noted. See special provision for "Metalizing of Structural Steel".

Calculated weight of Structural Steel = AASHTO M 270 Grade 50 = 262,480 pounds
AASHTO M 270 Grade 36 = 40,920 pounds

All structural steel shall be metallized. See Special Provision for "Metallizing of Structural Steel."

No field welding is permitted except as specified in the contract documents.

Reinforcement bars designated (E) shall be epoxy coated.

Slipforming of the parapets is not allowed.

Bearing seat surfaces shall be constructed or adjusted to the designated elevations within a tolerance of ⅛ in. (0.01 ft.). Adjustment shall be made either by grinding the surface or by shimming the bearings.

The Seal coat design thickness is based on the Cofferdam Design Water Elevation (CDWE) shown. Final cofferdam design, details and seal coat thickness shall be submitted to the Engineer for approval. The CDWE is equal to the Estimated Water Surface Elevation (EWSE) plus 3 feet.

Layout of the slope protection system may be varied to suit ground conditions in the field as directed by the Engineer.

The existing structural steel coating contains lead. The Contractor shall take appropriate precautions to address the presence of lead on this project.

INDEX OF SHEETS

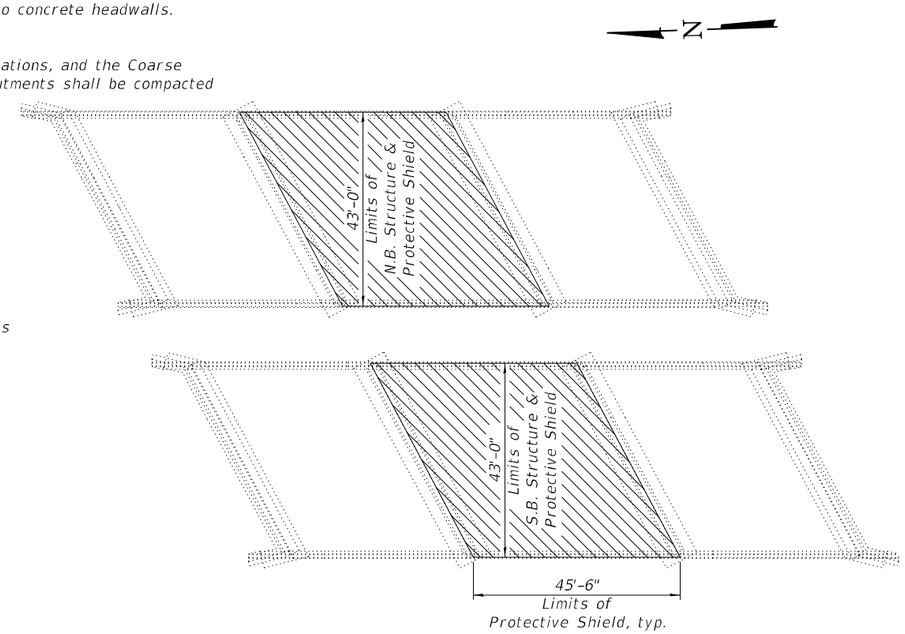

PROTECTIVE SHIELD DETAILS

DESIGN SCOUR ELEVATION TABLE

Event / Limit State	Design Scour Elevations (ft.)			
	N. Abut.	Pier	S. Abut.	Item 113
Q100	414.7	396.3	414.3	8
Q200	414.7	396.1	414.3	
Design	414.7	396.3	414.3	
Check	414.7	396.1	414.3	

WATERWAY INFORMATION

Drainage Area = 3.4 sq. mi.

Exist. Overtopping Elev. = 421.51 at Sta. 305+17
Prop. Overtopping Elev. = 422.18 at Sta. 305+60

Flood	Freq. Yr.	Q C.F.S.	Opening Ft² Exist.	Opening Ft² Prop.	Nat. H.W.E.	Head - Ft. Exist.	Head - Ft. Prop.	Headwater El. Exist.	Headwater El. Prop.
Ten-Year	10	829	611	663	413.5	0.1	0.1	413.6	413.6
Design	50	1,330	611	663	413.5	0.1	0.1	413.6	413.6
	100	1,550	611	663	413.5	0.2	0.2	413.7	413.7
	200	1,790	611	663	413.5	0.2	0.2	413.7	413.7
Max. Calc.	500	2,120	611	663	413.5	0.2	0.3	413.7	413.8

Existing 10 Year Average Velocity = 1.4 ft/s
Proposed 10 Year Average Velocity = 1.3 ft/s

TOTAL BILL OF MATERIAL

ITEM	UNIT	SUPER	SUB	TOTAL
Stone Riprap, Class A4	Sq. Yd.	-	3,123	3,123
Filter Fabric	Sq. Yd.	-	3,123	3,123
Removal of Existing Structure No. 1	Each	-	-	1
Removal of Existing Structure No. 2	Each	-	-	1
Protective Shield	Sq. Yd.	-	-	435
Structure Excavation	Cu. Yd.	-	232	232
Cofferdam Excavation	Cu. Yd.	-	390	390
Cofferdam (Type 2) (Location - 1)	Each	-	1	1
Cofferdam (Type 2) (Location - 2)	Each	-	1	1
Cofferdam (Type 2) (Location - 3)	Each	-	1	1
Floor Drains	Each	24	-	24
Concrete Structures	Cu. Yd.	-	600.2	600.2
Concrete Superstructure	Cu. Yd.	626.1	-	626.1
Seal Coat Concrete	Cu. Yd.	-	194.8	194.8
Protective Coat	Sq. Yd.	2,890	-	2,890
Concrete Superstructure (Approach Slab)	Cu. Yd.	385.8	-	385.8
Furnishing and Erecting Structural Steel	L Sum	0.37	-	0.37
Stud Shear Connectors	Each	11,712	-	11,712
Reinforcement Bars, Epoxy Coated	Pound	286,670	70,350	357,020
Bar Splicers	Each	1,282	312	1,594
Furnishing Steel Piles HP14X89	Foot	-	3,882	3,882
Driving Piles	Foot	-	3,882	3,882
Test Pile Steel HP14X89	Each	-	6	6
Pile Shoes	Each	-	82	82
Name Plates	Each	2	-	2
Anchor Bolts, 1"	Each	-	96	96
Temporary Sheet Piling	Sq. Ft.	-	237	237
Granular Backfill for Structures	Cu. Yd.	-	438	438
Geocomposite Wall Drain	Sq. Yd.	-	237	237
Pipe Underdrains for Structures 4"	Foot	-	377	377
Diamond Grinding (Bridge Section)	Sq. Yd.	2,415	-	2,415
Bridge Deck Grooving (Longitudinal)	Sq. Yd.	1,390	-	1,390
Bar Terminator	Each	776	1,496	2,272

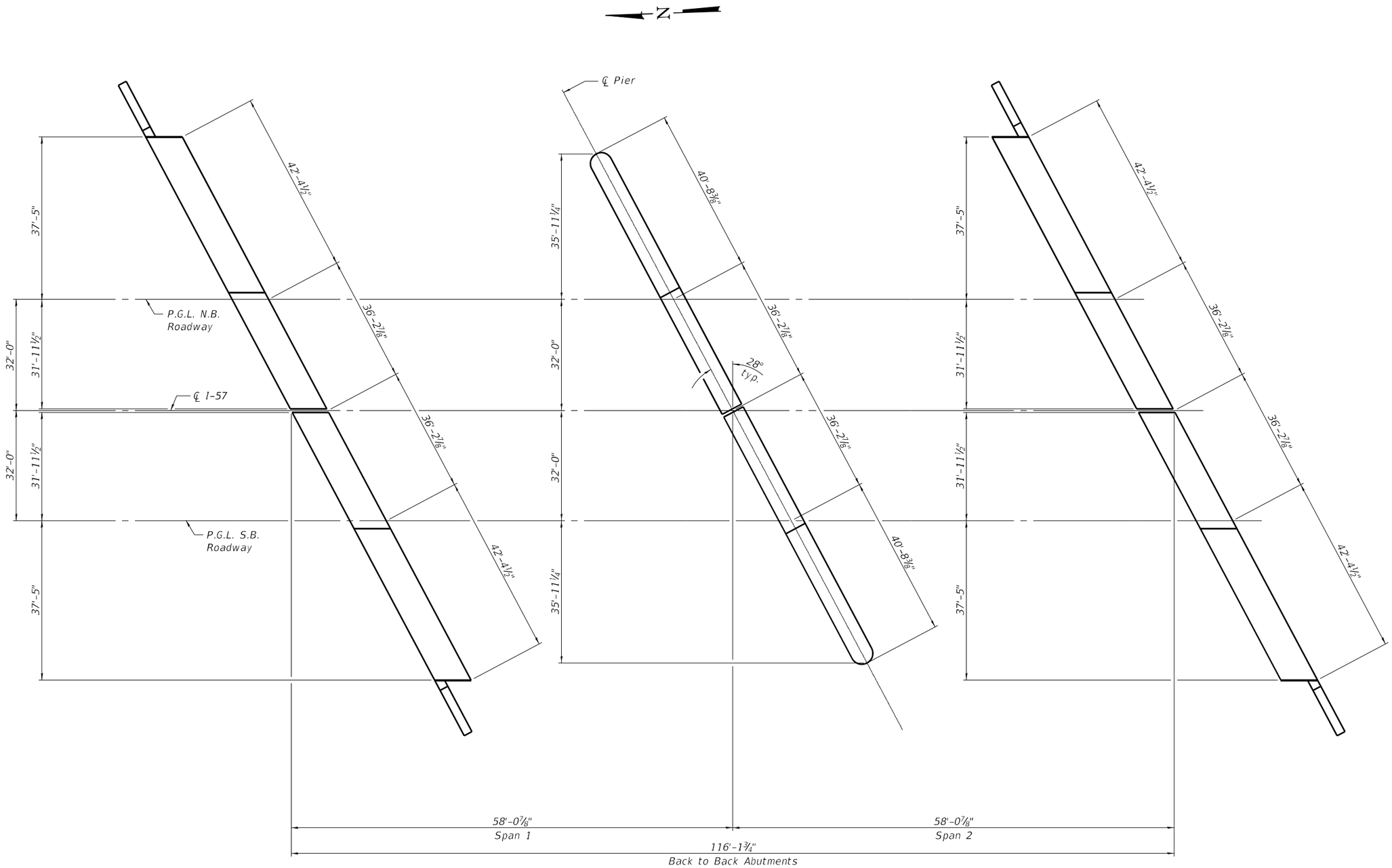

Notes:
1. Pier dimensions are to the end of the Pier cap.

FILE NAME: H:\P\221053 - D9 Various Various PTB 199-038\221053.017-I-57 over Marcum\Microstation\0280090_0091-78884-003-Substructure Layout.dgn

OATES ASSOCIATES www.oatesassociates.com ILLINOIS DESIGN FIRM LICENSE NO.: 184.001115	USER NAME =	DESIGNED - KBC	REVISED -	STATE OF ILLINOIS DEPARTMENT OF TRANSPORTATION	SUBSTRUCTURE LAYOUT STRUCTURE NO. 028-0090 (S.B.) & 028-0091 (N.B.)
		CHECKED - KP	REVISED -		
	PLOT SCALE =	DRAWN - KP	REVISED -		
	PLOT DATE = 12/13/2024	CHECKED - KBC	REVISED -		SHEET 3 OF 41 SHEETS

F.A.I. RTE.	SECTION	COUNTY	TOTAL SHEETS	SHEET NO.
57	(28-2)B-2	FRANKLIN	598	343
		CONTRACT NO. 78884		
		ILLINOIS	FED. AID PROJECT	

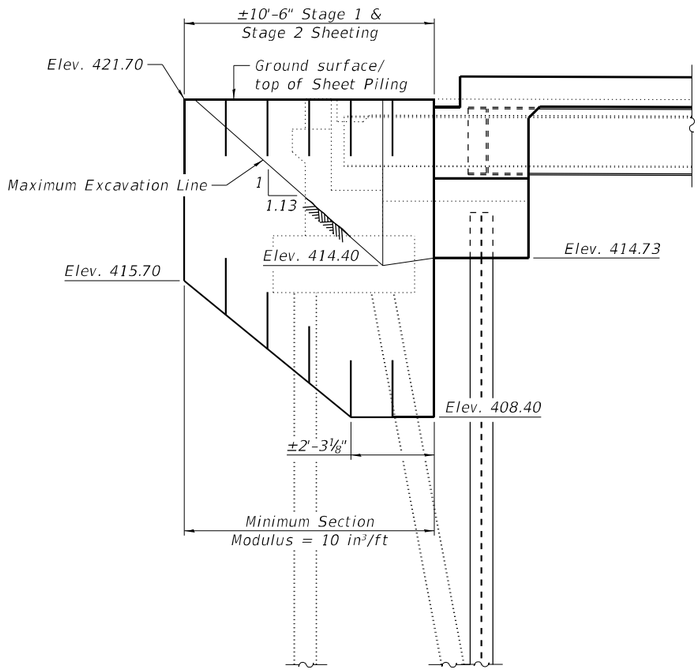

NORTH ABUTMENT ①②

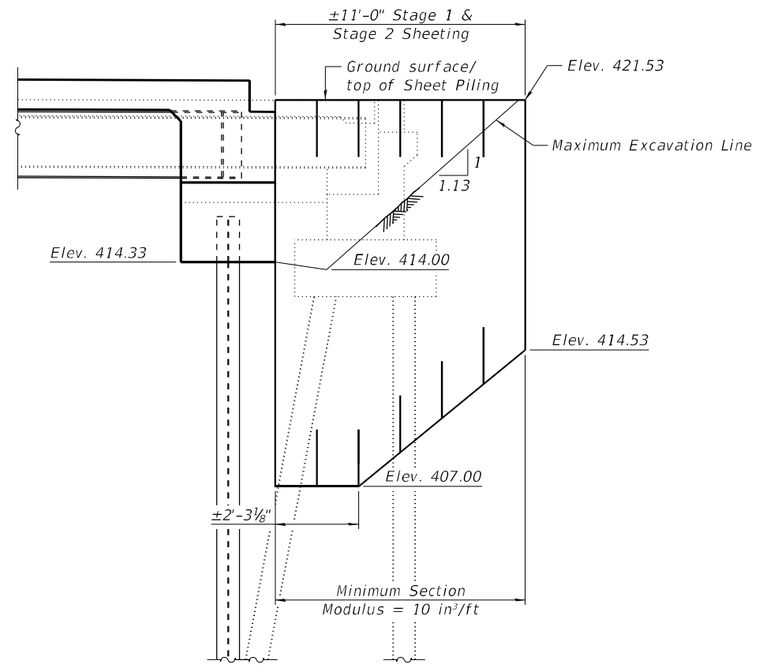

SOUTH ABUTMENT ①②

Notes:

① If the Contractor chooses to alter the temporary cantilevered sheet piling design requirements shown, a design submittal including plan details and calculations will be required for review and acceptance by the Engineer.

② The Contractor shall connect the first sheet to the existing abutment wall to ensure stability of sheets driven to the top of the existing footing. This connection shall be reviewed and accepted by the engineer and included in the cost for Temporary Sheet Piling.

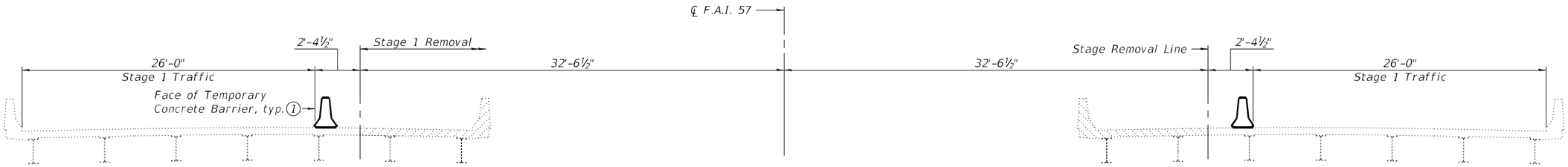

STAGE 1 REMOVAL

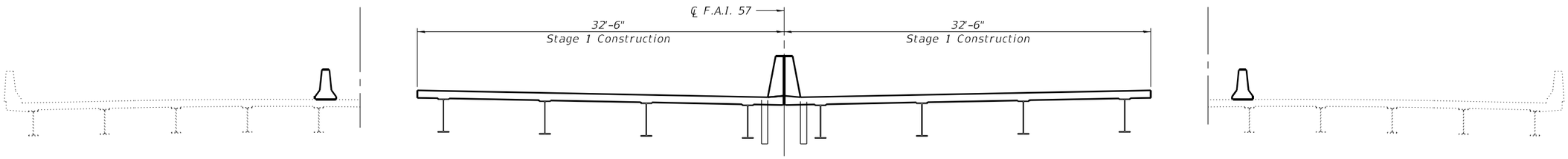

STAGE 1 CONSTRUCTION

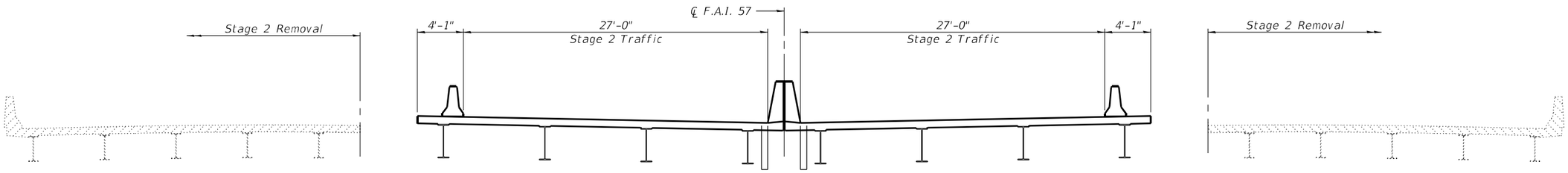

STAGE 2 REMOVAL

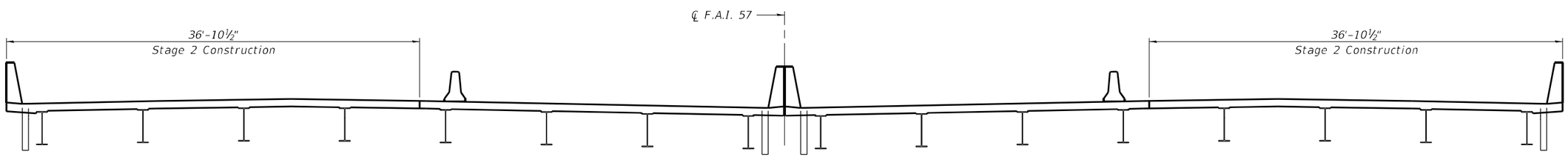

STAGE 2 CONSTRUCTION

Notes:

1. For details of Temporary Concrete Barrier, see sheet 6 of 41. For quantity of Temporary Concrete Barrier and related traffic control, see roadway plans.

FILE NAME: H:\P221053 - D9 Various Various PTB 199-038\221053.017-I-57 over Marcum\Microstation\0280090_0091-78884-005-Stage Construction Details.dgn

OATES ASSOCIATES www.oatesassociates.com ILLINOIS DESIGN FIRM LICENSE NO.: 184.001115	USER NAME =	DESIGNED - KP	REVISED -	STATE OF ILLINOIS DEPARTMENT OF TRANSPORTATION	STAGE CONSTRUCTION DETAILS STRUCTURE NO. 028-0090 (S.B.) & 028-0091 (N.B.)	F.A.I. RTE.	SECTION	COUNTY	TOTAL SHEETS	SHEET NO.
		CHECKED - KBC	REVISED -			57	(28-2)B-2	FRANKLIN	598	345
	PLOT SCALE =	DRAWN - KP	REVISED -			CONTRACT NO. 78884				
	PLOT DATE = 12/13/2024	CHECKED - KBC	REVISED -		SHEET 5 OF 41 SHEETS	ILLINOIS	FED. AID PROJECT			

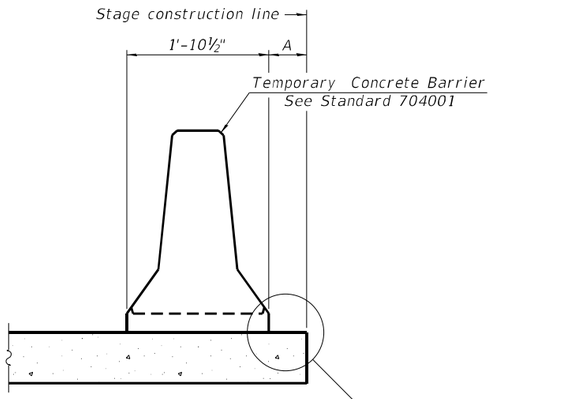

When "A" is 3'-1" or less, the temporary concrete barrier shall be restrained to the new slab according to Detail I, II or III. No restraint is required when "A" is greater than 3'-1".

NEW SLAB OR NEW DECK BEAM

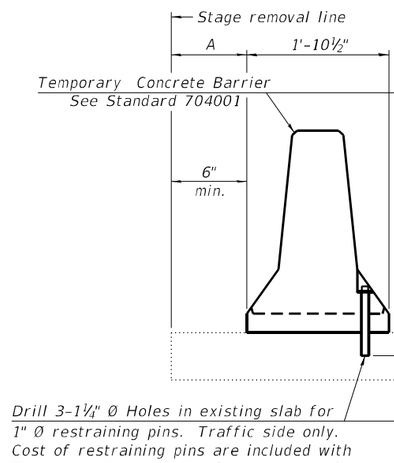

Drill 3-1¼" Ø Holes in existing slab for 1" Ø restraining pins. Traffic side only. Cost of restraining pins are included with Temporary Concrete Barrier. No restraint is required when "A" is greater than 3'-1".

EXISTING SLAB

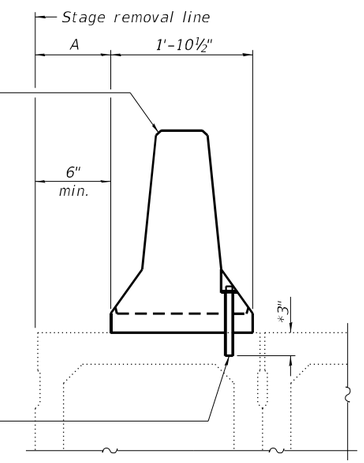

* When hot-mix asphalt wearing surface is present, embedment shall be 3" plus the wearing surface depth.

EXISTING DECK BEAM

SECTIONS THRU SLAB OR DECK BEAM

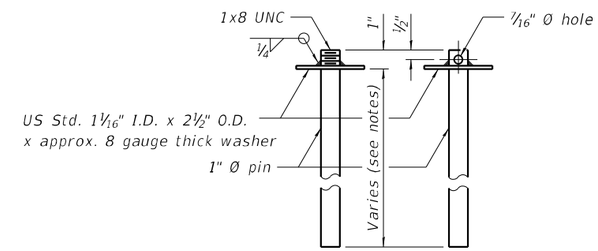

RESTRAINING PIN

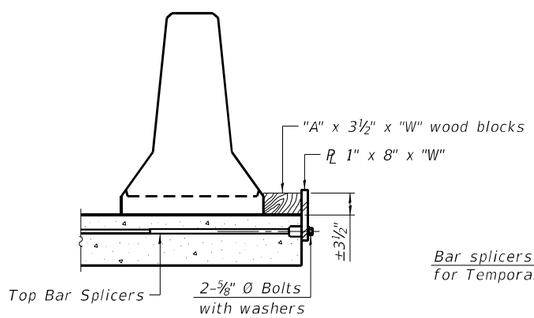

DETAIL I

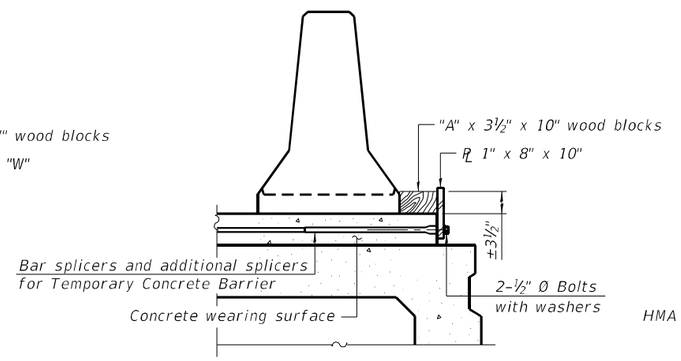

DETAIL II

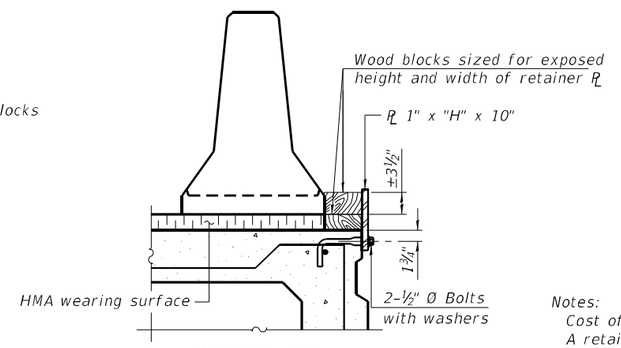

DETAIL III

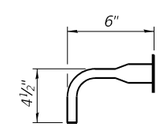

BAR SPLICER FOR #4 BAR - DETAIL III

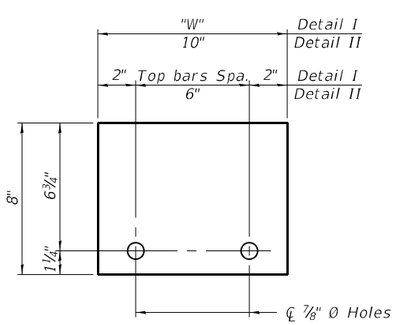

STEEL RETAINER PL 1" x 8" x "W"

(Detail I and II)

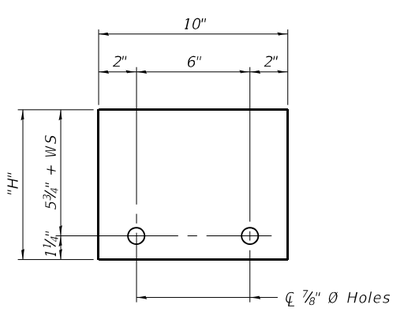

STEEL RETAINER PL 1" x "H" x 10"

(Detail III)

Notes:

Cost of retainer assembly is included with Temporary Concrete Barrier.

A retainer assembly shall be located at the approximate ℄ of each temporary concrete barrier.

The retainer plate shall not be removed until the concrete on the adjacent stage is ready to be poured. For Detail III applications the retainer plate shall not be removed until just prior to placing the adjacent beam.

When the 'A' dimension is less than 1½", the wood block shall be omitted and the barrier shall be placed in direct contact with the steel retainer plate. For deck beam applications the minimum required 'A' distance is 6" to accommodate the shear key clamping device.

Detail I - Installation for a new bridge deck or bridge slab.

Detail II - Installation for a new deck beam with an initial concrete wearing surface. Additional bar splicers shall be provided at 6'-0" centers and paired with the bar splicers of the concrete wearing surface reinforcement to accommodate the installation of the retainer assemblies. The cost of the additional bar splicers is included with the concrete wearing surface.

Detail III - Installation for a new deck beam with no initial wearing surface or with an initial hot-mix asphalt (HMA) wearing surface present. The deck beam directly beneath the temporary concrete barrier shall be fabricated with bar splicer inserts in the side of the beam, as detailed, to accommodate the installation of the retainer assemblies. A pair of bar splicers, 6" apart, shall be placed at 6'-0" centers along the length of the beam. The cost of the bar splicers is included with the deck beam.

RAILING CRITERIA

NCHRP 350 Test Level	3
Railing Weight (plf)	440

R-27

5-15-2023

FILE NAME: H:\P221053 - D9 Various Various PTB 199-038:221053.017-I-57 over Marcum\Microstation\0280090_0091-78884-006-Temporary Concrete Barrier.dgn

OATES ASSOCIATES
www.oatesassociates.com
ILLINOIS DESIGN FIRM LICENSE NO.: 184.001115

USER NAME =	DESIGNED -	REVISED -	
	CHECKED -	REVISED -	
PLOT SCALE =	DRAWN -	REVISED -	
PLOT DATE = 12/13/2024	CHECKED -	REVISED -	

STATE OF ILLINOIS
DEPARTMENT OF TRANSPORTATION

TEMPORARY CONCRETE BARRIER
STRUCTURE NO. 028-0090 (S.B.) & 028-0091 (N.B.)

SHEET 6 OF 41 SHEETS

F.A.I. RTE.	SECTION	COUNTY	TOTAL SHEETS	SHEET NO.
57	(28-2)B-2	FRANKLIN	598	346
		CONTRACT NO. 78884		
		ILLINOIS	FED. AID PROJECT	

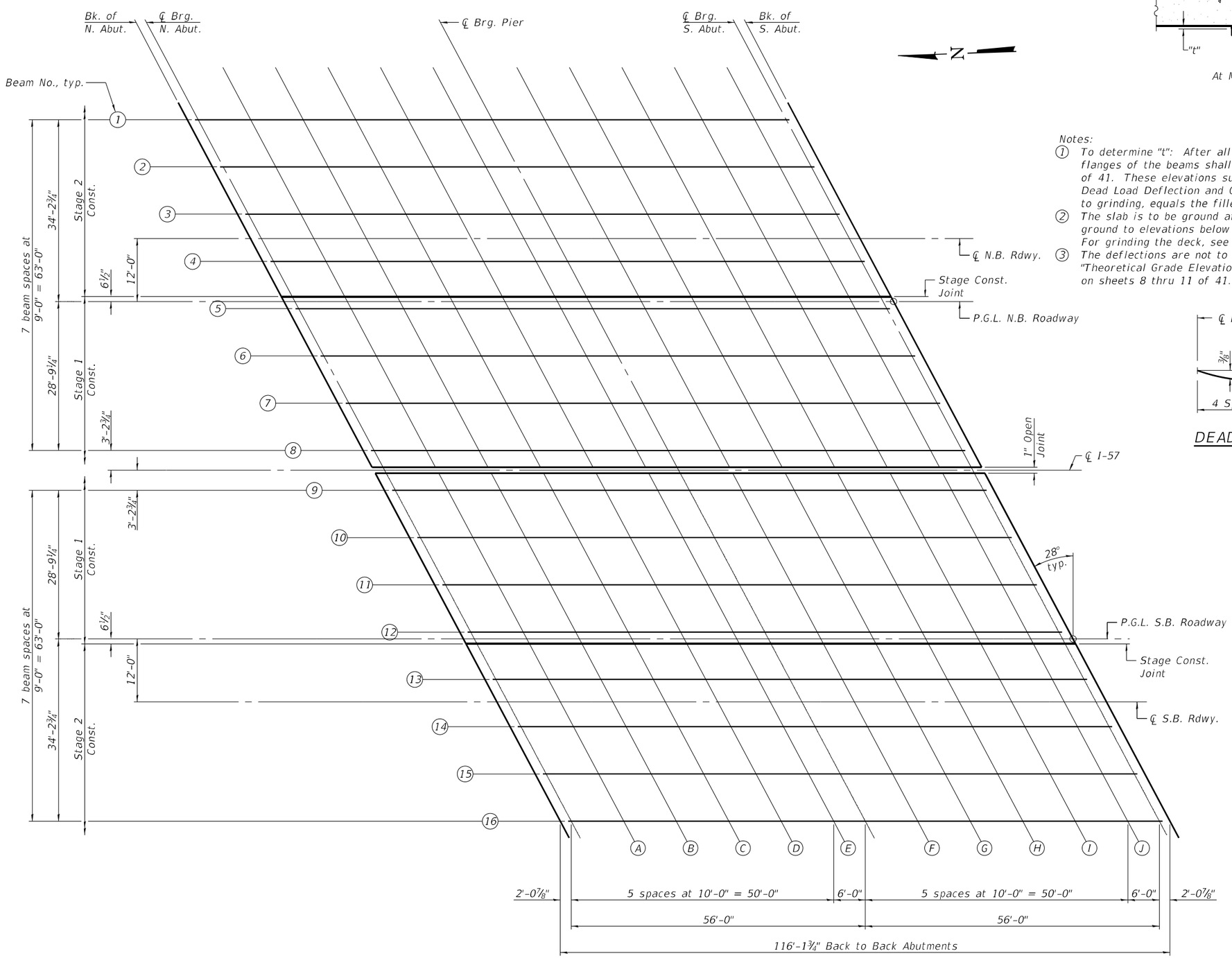

PLAN

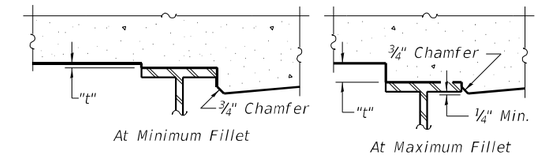

FILLET HEIGHTS ①

Notes:

① To determine "t": After all structural steel has been erected, elevations of the top flanges of the beams shall be taken at intervals shown in Plan and on sheets 8 thru 11 of 41. These elevations subtracted from the "Theoretical Grade Elevations Adjusted for Dead Load Deflection and Grinding" shown below, minus the initial slab thickness prior to grinding, equals the fillet heights "t" above top flange of beams.

② The slab is to be ground after curing to achieve smoothness, but the slab is not to be ground to elevations below the "Theoretical Grade Elevations" shown on 8 thru 11 of 41. For grinding the deck, see Special Provisions.

③ The deflections are not to be used in the field if the engineer is working from the "Theoretical Grade Elevations Adjusted for Dead Load Deflection and Grinding" as shown on sheets 8 thru 11 of 41.

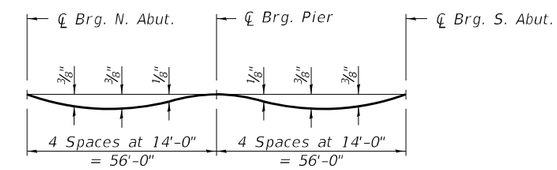

DEAD LOAD DEFLECTION DIAGRAM ③

(Includes weight of concrete only.)

FILE NAME: H:\P221053 - D9 Various Various PTB 199-038:221053.017-I-57 over Marcum\Microstation\0280090_0091-78884-007-Top of Slab Elevations.dgn

OATES ASSOCIATES www.oatesassociates.com ILLINOIS DESIGN FIRM LICENSE NO.: 184.001115	USER NAME =	DESIGNED - KP	REVISED -	STATE OF ILLINOIS DEPARTMENT OF TRANSPORTATION	TOP OF SLAB ELEVATIONS STRUCTURE NO. 028-0090 (S.B.) & 028-0091 (N.B.)	F.A.I. RTE.	SECTION	COUNTY	TOTAL SHEETS / SHEET NO.
		CHECKED - KBC	REVISED -			57	(28-2)B-2	FRANKLIN	598 / 347
	PLOT SCALE =	DRAWN - KP	REVISED -			CONTRACT NO. 78884			
	PLOT DATE = 12/13/2024	CHECKED - KBC	REVISED -		SHEET 7 OF 41 SHEETS	ILLINOIS	FED. AID PROJECT		

BEAM 1

Location	Station	Offset	Theoretical Grade Elevations	Theoretical Grade Elevations Adjusted For Dead Load Deflection and Grinding
Bk of N. Abut.	303+31.71	-66.23	422.59	422.61
℄ Brg. N. Abut.	303+33.79	-66.23	422.58	422.60
A	303+43.79	-66.23	422.54	422.58
B	303+53.79	-66.23	422.51	422.56
C	303+63.79	-66.23	422.47	422.52
D	303+73.79	-66.23	422.44	422.48
E	303+83.79	-66.23	422.40	422.43
℄ Brg. Pier	303+89.79	-66.23	422.38	422.40
F	303+99.79	-66.23	422.35	422.38
G	304+09.79	-66.23	422.31	422.36
H	304+19.79	-66.23	422.28	422.33
I	304+29.79	-66.23	422.24	422.29
J	304+39.79	-66.23	422.21	422.24
℄ Brg. S. Abut.	304+45.79	-66.23	422.19	422.21
Bk of S. Abut.	304+47.86	-66.23	422.18	422.20

BEAM 2

Location	Station	Offset	Theoretical Grade Elevations	Theoretical Grade Elevations Adjusted For Dead Load Deflection and Grinding
Bk of N. Abut.	303+36.49	-57.23	422.75	422.77
℄ Brg. N. Abut.	303+38.57	-57.23	422.74	422.76
A	303+48.57	-57.23	422.71	422.75
B	303+58.57	-57.23	422.67	422.72
C	303+68.57	-57.23	422.64	422.69
D	303+78.57	-57.23	422.60	422.64
E	303+88.57	-57.23	422.57	422.59
℄ Brg. Pier	303+94.57	-57.23	422.55	422.57
F	304+04.57	-57.23	422.51	422.54
G	304+14.57	-57.23	422.48	422.52
H	304+24.57	-57.23	422.44	422.49
I	304+34.57	-57.23	422.41	422.45
J	304+44.57	-57.23	422.37	422.40
℄ Brg. S. Abut.	304+50.57	-57.23	422.35	422.37
Bk of S. Abut.	304+52.65	-57.23	422.34	422.36

BEAM 3

Location	Station	Offset	Theoretical Grade Elevations	Theoretical Grade Elevations Adjusted For Dead Load Deflection and Grinding
Bk of N. Abut.	303+41.28	-4.23	422.87	422.89
℄ Brg. N. Abut.	303+43.36	-4.23	422.87	422.89
A	303+53.36	-4.23	422.83	422.87
B	303+63.36	-4.23	422.80	422.85
C	303+73.36	-4.23	422.76	422.81
D	303+83.36	-4.23	422.73	422.76
E	303+93.36	-4.23	422.69	422.71
℄ Brg. Pier	303+99.36	-4.23	422.67	422.69
F	304+09.36	-4.23	422.64	422.66
G	304+19.36	-4.23	422.60	422.64
H	304+29.36	-4.23	422.57	422.62
I	304+39.36	-4.23	422.53	422.58
J	304+49.36	-4.23	422.50	422.53
℄ Brg. S. Abut.	304+55.36	-4.23	422.47	422.49
Bk of S. Abut.	304+57.43	-4.23	422.47	422.49

℄ N.B. Roadway

Location	Station	Offset	Theoretical Grade Elevations	Theoretical Grade Elevations Adjusted For Dead Load Deflection and Grinding
Bk of N. Abut.	303+43.53	-44.00	422.93	422.95
℄ Brg. N. Abut.	303+45.60	-44.00	422.92	422.94
A	303+55.60	-44.00	422.89	422.93
B	303+65.60	-44.00	422.85	422.90
C	303+75.60	-44.00	422.82	422.87
D	303+85.60	-44.00	422.78	422.82
E	303+95.60	-44.00	422.75	422.77
℄ Brg. Pier	304+11.60	-44.00	422.69	422.72
F	304+01.60	-44.00	422.73	422.75
G	304+21.60	-44.00	422.66	422.70
H	304+31.60	-44.00	422.62	422.67
I	304+41.60	-44.00	422.59	422.63
J	304+51.60	-44.00	422.55	422.58
℄ Brg. S. Abut.	304+57.60	-44.00	422.53	422.55
Bk of S. Abut.	304+59.68	-44.00	422.52	422.54

BEAM 4

Location	Station	Offset	Theoretical Grade Elevations	Theoretical Grade Elevations Adjusted For Dead Load Deflection and Grinding
Bk of N. Abut.	303+46.07	-39.23	422.85	422.87
℄ Brg. N. Abut.	303+48.14	-39.23	422.84	422.86
A	303+58.14	-39.23	422.81	422.85
B	303+68.14	-39.23	422.77	422.82
C	303+78.14	-39.23	422.74	422.79
D	303+88.14	-39.23	422.70	422.74
E	303+98.14	-39.23	422.67	422.69
℄ Brg. Pier	304+04.14	-39.23	422.65	422.67
F	304+14.14	-39.23	422.61	422.64
G	304+24.14	-39.23	422.58	422.62
H	304+34.14	-39.23	422.54	422.59
I	304+44.14	-39.23	422.51	422.55
J	304+54.14	-39.23	422.47	422.50
℄ Brg. S. Abut.	304+60.14	-39.23	422.45	422.47
Bk of S. Abut.	304+62.22	-39.23	422.44	422.46

STAGE CONSTRUCTION JOINT

Location	Station	Offset	Theoretical Grade Elevations	Theoretical Grade Elevations Adjusted For Dead Load Deflection and Grinding
Bk of N. Abut.	303+49.62	-32.54	422.74	422.76
℄ Brg. N. Abut.	303+51.70	-32.54	422.73	422.75
A	303+61.70	-32.54	422.69	422.73
B	303+71.70	-32.54	422.66	422.71
C	303+81.70	-32.54	422.62	422.67
D	303+91.70	-32.54	422.59	422.63
E	304+01.70	-32.54	422.55	422.58
℄ Brg. Pier	304+07.70	-32.54	422.53	422.55
F	304+17.70	-32.54	422.50	422.53
G	304+27.70	-32.54	422.46	422.51
H	304+37.70	-32.54	422.43	422.48
I	304+47.70	-32.54	422.39	422.44
J	304+57.70	-32.54	422.36	422.39
℄ Brg. S. Abut.	304+63.70	-32.54	422.34	422.36
Bk of S. Abut.	304+65.77	-32.54	422.33	422.35

PROFILE GRADE - N.B.

Location	Station	Offset	Theoretical Grade Elevations	Theoretical Grade Elevations Adjusted For Dead Load Deflection and Grinding
Bk of N. Abut.	303+49.91	-32.00	422.73	422.75
℄ Brg. N. Abut.	303+51.99	-32.00	422.72	422.74
A	303+61.99	-32.00	422.68	422.73
B	303+71.99	-32.00	422.65	422.70
C	303+81.99	-32.00	422.61	422.66
D	303+91.99	-32.00	422.58	422.62
E	304+01.99	-32.00	422.54	422.57
℄ Brg. Pier	304+07.99	-32.00	422.52	422.54
F	304+17.99	-32.00	422.49	422.52
G	304+27.99	-32.00	422.45	422.50
H	304+37.99	-32.00	422.42	422.47
I	304+47.99	-32.00	422.38	422.43
J	304+57.99	-32.00	422.35	422.38
℄ Brg. S. Abut.	304+63.99	-32.00	422.33	422.35
Bk of S. Abut.	304+66.06	-32.00	422.32	422.34

BEAM 5

Location	Station	Offset	Theoretical Grade Elevations	Theoretical Grade Elevations Adjusted For Dead Load Deflection and Grinding
Bk of N. Abut.	303+50.85	-30.23	422.69	422.71
℄ Brg. N. Abut.	303+52.93	-30.23	422.68	422.70
A	303+62.93	-30.23	422.65	422.69
B	303+72.93	-30.23	422.61	422.66
C	303+82.93	-30.23	422.58	422.63
D	303+92.93	-30.23	422.54	422.58
E	304+02.93	-30.23	422.51	422.53
℄ Brg. Pier	304+08.93	-30.23	422.48	422.50
F	304+18.93	-30.23	422.45	422.48
G	304+28.93	-30.23	422.41	422.46
H	304+38.93	-30.23	422.38	422.43
I	304+48.93	-30.23	422.34	422.39
J	304+58.93	-30.23	422.31	422.34
℄ Brg. S. Abut.	304+64.93	-30.23	422.29	422.31
Bk of S. Abut.	304+67.00	-30.23	422.28	422.30

BEAM 6

Location	Station	Offset	Theoretical Grade Elevations	Theoretical Grade Elevations Adjusted For Dead Load Deflection and Grinding
Bk of N. Abut.	303+55.64	-21.23	422.49	422.51
℄ Brg. N. Abut.	303+57.71	-21.23	422.48	422.50
A	303+67.71	-21.23	422.45	422.49
B	303+77.71	-21.23	422.41	422.47
C	303+87.71	-21.23	422.38	422.43
D	303+97.71	-21.23	422.34	422.38
E	304+07.71	-21.23	422.31	422.33
℄ Brg. Pier	304+13.71	-21.23	422.29	422.31
F	304+23.71	-21.23	422.25	422.28
G	304+33.71	-21.23	422.22	422.26
H	304+43.71	-21.23	422.18	422.24
I	304+53.71	-21.23	422.15	422.20
J	304+63.71	-21.23	422.11	422.15
℄ Brg. S. Abut.	304+69.71	-21.23	422.09	422.11
Bk of S. Abut.	304+71.79	-21.23	422.08	422.10

BEAM 7

Location	Station	Offset	Theoretical Grade Elevations	Theoretical Grade Elevations Adjusted For Dead Load Deflection and Grinding
Bk of N. Abut.	303+60.42	-12.23	422.29	422.31
℄ Brg. N. Abut.	303+62.50	-12.23	422.29	422.31
A	303+72.50	-12.23	422.25	422.29
B	303+82.50	-12.23	422.22	422.27
C	303+92.50	-12.23	422.18	422.23
D	304+02.50	-12.23	422.15	422.19
E	304+12.50	-12.23	422.11	422.14
℄ Brg. Pier	304+18.50	-12.23	422.09	422.11
F	304+28.50	-12.23	422.06	422.09
G	304+38.50	-12.23	422.02	422.06
H	304+48.50	-12.23	421.99	422.04
I	304+58.50	-12.23	421.95	422.00
J	304+68.50	-12.23	421.92	421.95
℄ Brg. S. Abut.	304+74.50	-12.23	421.90	421.92
Bk of S. Abut.	304+76.57	-12.23	421.89	421.91

BEAM 8

Location	Station	Offset	Theoretical Grade Elevations	Theoretical Grade Elevations Adjusted For Dead Load Deflection and Grinding
Bk of N. Abut.	303+65.21	-3.23	422.10	422.12
℄ Brg. N. Abut.	303+67.28	-3.23	422.09	422.11
A	303+77.28	-3.23	422.06	422.10
B	303+87.28	-3.23	422.02	422.07
C	303+97.28	-3.23	421.99	422.04
D	304+07.28	-3.23	421.95	421.99
E	304+17.28	-3.23	421.92	421.94
℄ Brg. Pier	304+23.28	-3.23	421.89	421.91
F	304+33.28	-3.23	421.86	421.89
G	304+43.28	-3.23	421.82	421.87
H	304+53.28	-3.23	421.79	421.84
I	304+63.28	-3.23	421.75	421.80
J	304+73.28	-3.23	421.72	421.75
℄ Brg. S. Abut.	304+79.28	-3.23	421.70	421.72
Bk of S. Abut.	304+81.36	-3.23	421.69	421.71

BEAM 9

Location	Station	Offset	Theoretical Grade Elevations	Theoretical Grade Elevations Adjusted For Dead Load Deflection and Grinding
Bk of N. Abut.	303+68.64	3.23	422.08	422.10
℄ Brg. N. Abut.	303+70.72	3.23	422.08	422.10
A	303+80.72	3.23	422.04	422.08
B	303+90.72	3.23	422.01	422.06
C	304+00.72	3.23	421.97	422.02
D	304+10.72	3.23	421.94	421.98
E	304+20.72	3.23	421.90	421.93
℄ Brg. Pier	304+26.72	3.23	421.88	421.90
F	304+36.72	3.23	421.85	421.88
G	304+46.72	3.23	421.81	421.85
H	304+56.72	3.23	421.78	421.83
I	304+66.72	3.23	421.74	421.79
J	304+76.72	3.23	421.71	421.74
℄ Brg. S. Abut.	304+82.72	3.23	421.69	421.71
Bk of S. Abut.	304+84.79	3.23	421.68	421.70

BEAM 10

Location	Station	Offset	Theoretical Grade Elevations	Theoretical Grade Elevations Adjusted For Dead Load Deflection and Grinding
Bk of N. Abut.	303+73.43	12.23	422.25	422.27
℄ Brg. N. Abut.	303+75.50	12.23	422.24	422.26
A	303+85.50	12.23	422.21	422.25
B	303+95.50	12.23	422.17	422.22
C	304+05.50	12.23	422.14	422.19
D	304+15.50	12.23	422.10	422.14
E	304+25.50	12.23	422.07	422.09
℄ Brg. Pier	304+31.50	12.23	422.04	422.06
F	304+41.50	12.23	422.01	422.04
G	304+51.50	12.23	421.97	422.02
H	304+61.50	12.23	421.94	421.99
I	304+71.50	12.23	421.90	421.95
J	304+81.50	12.23	421.87	421.90
℄ Brg. S. Abut.	304+87.50	12.23	421.85	421.87
Bk of S. Abut.	304+89.58	12.23	421.84	421.86

BEAM 11

Location	Station	Offset	Theoretical Grade Elevations	Theoretical Grade Elevations Adjusted For Dead Load Deflection and Grinding
Bk of N. Abut.	303+78.21	21.23	422.41	422.43
℄ Brg. N. Abut.	303+80.29	21.23	422.40	422.42
A	303+90.29	21.23	422.37	422.41
B	304+00.29	21.23	422.33	422.39
C	304+10.29	21.23	422.30	422.35
D	304+20.29	21.23	422.26	422.30
E	304+30.29	21.23	422.23	422.25
℄ Brg. Pier	304+36.29	21.23	422.21	422.23
F	304+46.29	21.23	422.17	422.20
G	304+56.29	21.23	422.14	422.18
H	304+66.29	21.23	422.10	422.16
I	304+76.29	21.23	422.07	422.12
J	304+86.29	21.23	422.03	422.07
℄ Brg. S. Abut.	304+92.29	21.23	422.01	422.03
Bk of S. Abut.	304+94.36	21.23	422.01	422.03

BEAM 12

Location	Station	Offset	Theoretical Grade Elevations	Theoretical Grade Elevations Adjusted For Dead Load Deflection and Grinding
Bk of N. Abut.	303+83.00	30.23	422.57	422.59
℄ Brg. N. Abut.	303+85.07	30.23	422.57	422.59
A	303+95.07	30.23	422.53	422.57
B	304+05.07	30.23	422.50	422.55
C	304+15.07	30.23	422.46	422.51
D	304+25.07	30.23	422.43	422.47
E	304+35.07	30.23	422.39	422.42
℄ Brg. Pier	304+41.07	30.23	422.37	422.39
F	304+51.07	30.23	422.34	422.36
G	304+61.07	30.23	422.30	422.34
H	304+71.07	30.23	422.27	422.32
I	304+81.07	30.23	422.23	422.28
J	304+91.07	30.23	422.20	422.23
℄ Brg. S. Abut.	304+97.07	30.23	422.18	422.20
Bk of S. Abut.	304+99.15	30.23	422.17	422.19

PROFILE GRADE - S.B.

Location	Station	Offset	Theoretical Grade Elevations	Theoretical Grade Elevations Adjusted For Dead Load Deflection and Grinding
Bk of N. Abut.	303+83.94	32.00	422.61	422.63
℄ Brg. N. Abut.	303+86.01	32.00	422.60	422.62
A	303+96.01	32.00	422.56	422.60
B	304+06.01	32.00	422.53	422.58
C	304+16.01	32.00	422.49	422.54
D	304+26.01	32.00	422.46	422.50
E	304+36.01	32.00	422.42	422.45
℄ Brg. Pier	304+42.01	32.00	422.40	422.42
F	304+52.01	32.00	422.37	422.40
G	304+62.01	32.00	422.33	422.38
H	304+72.01	32.00	422.30	422.35
I	304+82.01	32.00	422.26	422.31
J	304+92.01	32.00	422.23	422.26
℄ Brg. S. Abut.	304+98.01	32.00	422.21	422.23
Bk of S. Abut.	305+00.09	32.00	422.21	422.23

STAGE CONSTRUCTION JOINT

Location	Station	Offset	Theoretical Grade Elevations	Theoretical Grade Elevations Adjusted For Dead Load Deflection and Grinding
Bk of N. Abut.	303+84.23	32.54	422.61	422.63
℄ Brg. N. Abut.	303+86.30	32.54	422.61	422.63
A	303+96.30	32.54	422.57	422.61
B	304+06.30	32.54	422.54	422.59
C	304+16.30	32.54	422.50	422.55
D	304+26.30	32.54	422.47	422.50
E	304+36.30	32.54	422.43	422.45
℄ Brg. Pier	304+42.30	32.54	422.41	422.43
F	304+52.30	32.54	422.38	422.40
G	304+62.30	32.54	422.34	422.38
H	304+72.30	32.54	422.31	422.36
I	304+82.30	32.54	422.27	422.32
J	304+92.30	32.54	422.24	422.27
℄ Brg. S. Abut.	304+98.30	32.54	422.22	422.24
Bk of S. Abut.	305+00.38	32.54	422.21	422.23

BEAM 13

Location	Station	Offset	Theoretical Grade Elevations	Theoretical Grade Elevations Adjusted For Dead Load Deflection and Grinding
Bk of N. Abut.	303+87.78	39.23	422.70	422.72
℄ Brg. N. Abut.	303+89.86	39.23	422.69	422.71
A	303+99.86	39.23	422.66	422.70
B	304+09.86	39.23	422.62	422.68
C	304+19.86	39.23	422.59	422.64
D	304+29.86	39.23	422.55	422.59
E	304+39.86	39.23	422.52	422.54
℄ Brg. Pier	304+45.86	39.23	422.50	422.52
F	304+55.86	39.23	422.46	422.49
G	304+65.86	39.23	422.43	422.47
H	304+75.86	39.23	422.39	422.45
I	304+85.86	39.23	422.36	422.41
J	304+95.86	39.23	422.33	422.36
℄ Brg. S. Abut.	305+01.86	39.23	422.31	422.33
Bk of S. Abut.	305+03.93	39.23	422.30	422.32

℄ S.B. Roadway

Location	Station	Offset	Theoretical Grade Elevations	Theoretical Grade Elevations Adjusted For Dead Load Deflection and Grinding
Bk of N. Abut.	303+90.32	44.00	422.76	422.78
℄ Brg. N. Abut.	303+92.40	44.00	422.76	422.78
A	304+02.40	44.00	422.72	422.76
B	304+12.40	44.00	422.69	422.74
C	304+22.40	44.00	422.65	422.70
D	304+32.40	44.00	422.62	422.65
E	304+42.40	44.00	422.58	422.61
℄ Brg. Pier	304+58.40	44.00	422.53	422.55
F	304+48.40	44.00	422.56	422.58
G	304+68.40	44.00	422.49	422.53
H	304+78.40	44.00	422.46	422.51
I	304+88.40	44.00	422.42	422.47
J	304+98.40	44.00	422.39	422.42
℄ Brg. S. Abut.	305+04.40	44.00	422.37	422.39
Bk of S. Abut.	305+06.47	44.00	422.37	422.39

BEAM 14

Location	Station	Offset	Theoretical Grade Elevations	Theoretical Grade Elevations Adjusted For Dead Load Deflection and Grinding
Bk of N. Abut.	303+92.57	48.23	422.69	422.71
℄ Brg. N. Abut.	303+94.64	48.23	422.69	422.71
A	304+04.64	48.23	422.65	422.69
B	304+14.64	48.23	422.62	422.67
C	304+24.64	48.23	422.58	422.63
D	304+34.64	48.23	422.55	422.58
E	304+44.64	48.23	422.51	422.53
℄ Brg. Pier	304+50.64	48.23	422.49	422.51
F	304+60.64	48.23	422.45	422.48
G	304+70.64	48.23	422.42	422.46
H	304+80.64	48.23	422.38	422.44
I	304+90.64	48.23	422.35	422.40
J	305+00.64	48.23	422.32	422.35
℄ Brg. S. Abut.	305+06.64	48.23	422.30	422.32
Bk of S. Abut.	305+08.72	48.23	422.30	422.32

BEAM 15

Location	Station	Offset	Theoretical Grade Elevations	Theoretical Grade Elevations Adjusted For Dead Load Deflection and Grinding
Bk of N. Abut.	303+97.35	57.23	422.53	422.55
℄ Brg. N. Abut.	303+99.43	57.23	422.53	422.55
A	304+09.43	57.23	422.49	422.53
B	304+19.43	57.23	422.46	422.51
C	304+29.43	57.23	422.42	422.47
D	304+39.43	57.23	422.39	422.43
E	304+49.43	57.23	422.35	422.38
℄ Brg. Pier	304+55.43	57.23	422.33	422.35
F	304+65.43	57.23	422.30	422.33
G	304+75.43	57.23	422.26	422.31
H	304+85.43	57.23	422.23	422.28
I	304+95.43	57.23	422.19	422.24
J	305+05.43	57.23	422.17	422.20
℄ Brg. S. Abut.	305+11.43	57.23	422.15	422.17
Bk of S. Abut.	305+13.51	57.23	422.15	422.17

BEAM 16

Location	Station	Offset	Theoretical Grade Elevations	Theoretical Grade Elevations Adjusted For Dead Load Deflection and Grinding
Bk of N. Abut.	304+02.14	66.23	422.34	422.36
℄ Brg. N. Abut.	304+04.21	66.23	422.33	422.35
A	304+14.21	66.23	422.30	422.34
B	304+24.21	66.23	422.26	422.31
C	304+34.21	66.23	422.23	422.28
D	304+44.21	66.23	422.19	422.23
E	304+54.21	66.23	422.16	422.18
℄ Brg. Pier	304+60.21	66.23	422.13	422.15
F	304+70.21	66.23	422.10	422.13
G	304+80.21	66.23	422.06	422.11
H	304+90.21	66.23	422.03	422.08
I	305+00.21	66.23	422.00	422.05
J	305+10.21	66.23	421.97	422.01
℄ Brg. S. Abut.	305+16.21	66.23	421.96	421.98
Bk of S. Abut.	305+18.29	66.23	421.96	421.98

EAST EDGE OF SHOULDER

Location	Station	Offset	Theoretical Grade Elevations	Theoretical Grade Elevations Adjusted For Grinding
N. End of Appr. Slab	303+01.90	-68.00	422.65	422.67
A1	303+11.90	-68.00	422.62	422.64
A2	303+21.90	-68.00	422.58	422.60
S. End of Appr. Slab	303+31.90	-68.00	422.55	422.57

EAST EDGE OF PAVEMENT

Location	Station	Offset	Theoretical Grade Elevations	Theoretical Grade Elevations Adjusted For Grinding
N. End of Appr. Slab	303+08.28	-56.00	422.87	422.89
A1	303+18.28	-56.00	422.84	422.86
A2	303+28.28	-56.00	422.80	422.82
S. End of Appr. Slab	303+38.28	-56.00	422.77	422.79

℄ ROADWAY (N.B.)

Location	Station	Offset	Theoretical Grade Elevations	Theoretical Grade Elevations Adjusted For Grinding
N. End of Appr. Slab	303+14.66	-44.00	423.03	423.05
A1	303+24.66	-44.00	422.99	423.01
A2	303+34.66	-44.00	422.96	422.98
S. End of Appr. Slab	303+44.66	-44.00	422.92	422.94

STAGE CONSTRUCTION JOINT (N.B.)

Location	Station	Offset	Theoretical Grade Elevations	Theoretical Grade Elevations Adjusted For Grinding
N. End of Appr. Slab	303+20.75	-32.54	422.84	422.86
A1	303+30.75	-32.54	422.80	422.82
A2	303+40.75	-32.54	422.77	422.79
S. End of Appr. Slab	303+50.75	-32.54	422.73	422.75

WEST EDGE OF PAVEMENT & P.G.L. (N.B.)

Location	Station	Offset	Theoretical Grade Elevations	Theoretical Grade Elevations Adjusted For Grinding
N. End of Appr. Slab	303+21.04	-32.00	422.83	422.85
A1	303+31.04	-32.00	422.79	422.81
A2	303+41.04	-32.00	422.76	422.78
S. End of Appr. Slab	303+51.04	-32.00	422.72	422.74

WEST EDGE OF FUTURE LANE

Location	Station	Offset	Theoretical Grade Elevations	Theoretical Grade Elevations Adjusted For Grinding
N. End of Appr. Slab	303+27.42	-20.00	422.57	422.59
A1	303+37.42	-20.00	422.53	422.55
A2	303+47.42	-20.00	422.50	422.52
S. End of Appr. Slab	303+57.42	-20.00	422.46	422.48

WEST EDGE OF SHOULDER

Location	Station	Offset	Theoretical Grade Elevations	Theoretical Grade Elevations Adjusted For Grinding
N. End of Appr. Slab	303+37.28	-1.46	422.16	422.18
A1	303+47.28	-1.46	422.12	422.14
A2	303+57.28	-1.46	422.09	422.11
S. End of Appr. Slab	303+67.28	-1.46	422.05	422.07

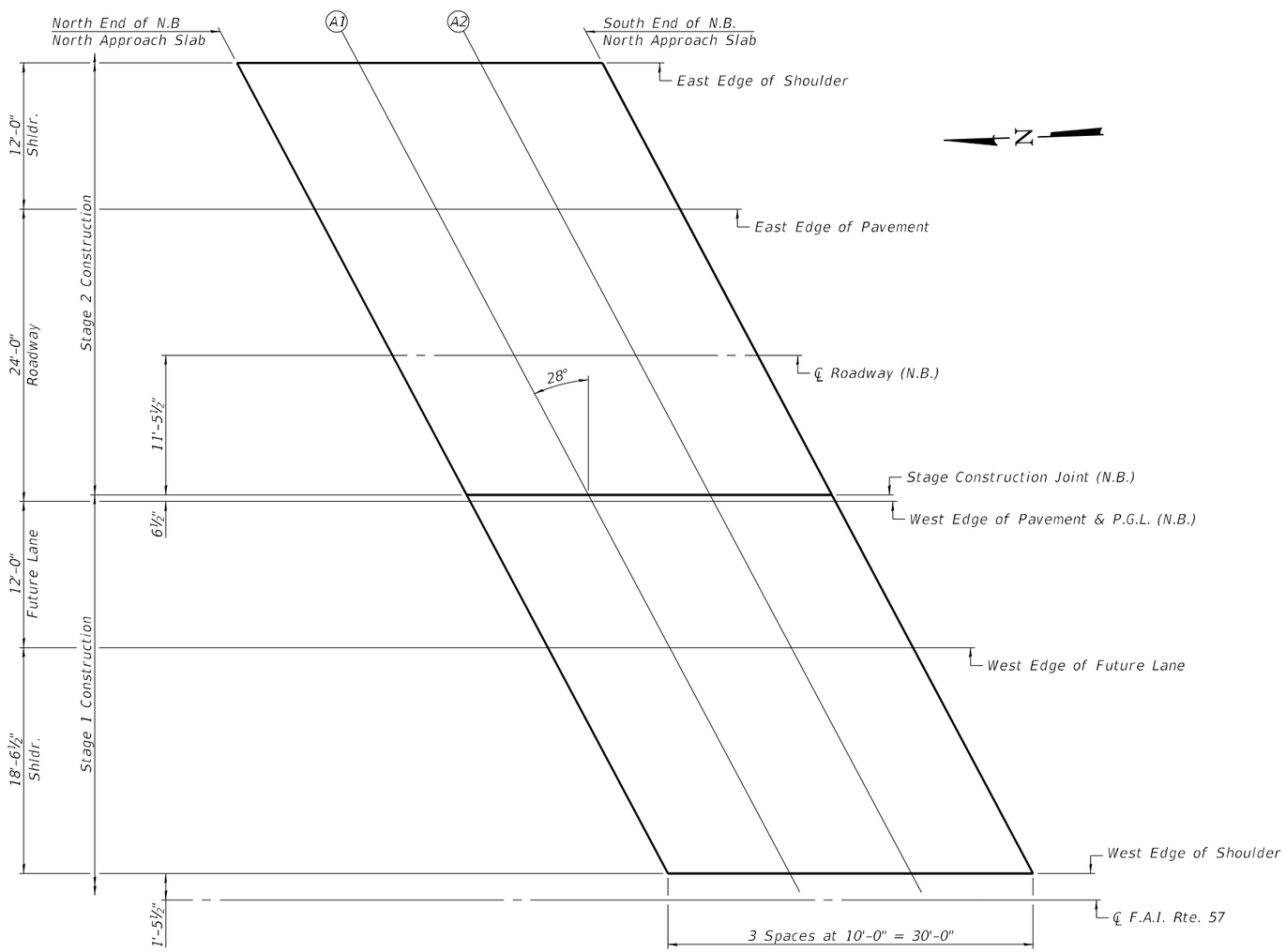

PLAN

FILE NAME: H:\P\221053 - D9 Various Various PTB 199-038\221053.017-I-57 over Marcum\Microstation\028090_0091-78884-012-Top of Approach Slab Elevations - N.B.dgn

OATES ASSOCIATES
www.oatesassociates.com
ILLINOIS DESIGN FIRM LICENSE NO.: 184.001115

USER NAME =	DESIGNED - KP	REVISED -	
	CHECKED - KBC	REVISED -	
PLOT SCALE =	DRAWN - KP	REVISED -	
PLOT DATE = 12/13/2024	CHECKED - KBC	REVISED -	

STATE OF ILLINOIS
DEPARTMENT OF TRANSPORTATION

TOP OF APPROACH SLAB ELEVATIONS
STRUCTURE NO. 028-0091 (N.B.)

SHEET 12 OF 41 SHEETS

F.A.I. RTE.	SECTION	COUNTY	TOTAL SHEETS	SHEET NO.
57	(28-2)B-2	FRANKLIN	598	352

CONTRACT NO. 78884

ILLINOIS | FED. AID PROJECT

EAST EDGE OF SHOULDER

Location	Station	Offset	Theoretical Grade Elevations	Theoretical Grade Elevations Adjusted For Grinding
N. End of Appr. Slab	304+45.79	-68.00	422.15	422.17
A3	304+55.79	-68.00	422.12	422.14
A4	304+65.79	-68.00	422.08	422.10
S. End of Appr. Slab	304+75.79	-68.00	422.05	422.07

EAST EDGE OF PAVEMENT

Location	Station	Offset	Theoretical Grade Elevations	Theoretical Grade Elevations Adjusted For Grinding
N. End of Appr. Slab	304+52.17	-56.00	422.37	422.39
A3	304+62.17	-56.00	422.33	422.35
A4	304+72.17	-56.00	422.30	422.32
S. End of Appr. Slab	304+82.17	-56.00	422.27	422.29

℄ ROADWAY (N.B.)

Location	Station	Offset	Theoretical Grade Elevations	Theoretical Grade Elevations Adjusted For Grinding
N. End of Appr. Slab	304+58.55	-44.00	422.53	422.55
A3	304+68.55	-44.00	422.49	422.51
A4	304+78.55	-44.00	422.46	422.48
S. End of Appr. Slab	304+88.55	-44.00	422.43	422.45

STAGE CONSTRUCTION JOINT (N.B.)

Location	Station	Offset	Theoretical Grade Elevations	Theoretical Grade Elevations Adjusted For Grinding
N. End of Appr. Slab	304+64.64	-32.54	422.33	422.35
A3	304+74.64	-32.54	422.30	422.32
A4	304+84.64	-32.54	422.27	422.29
S. End of Appr. Slab	304+94.64	-32.54	422.24	422.26

WEST EDGE OF PAVEMENT & P.G.L. (N.B.)

Location	Station	Offset	Theoretical Grade Elevations	Theoretical Grade Elevations Adjusted For Grinding
N. End of Appr. Slab	304+64.93	-32.00	422.32	422.34
A3	304+74.93	-32.00	422.29	422.31
A4	304+84.93	-32.00	422.26	422.28
S. End of Appr. Slab	304+94.93	-32.00	422.23	422.25

WEST EDGE OF FUTURE LANE

Location	Station	Offset	Theoretical Grade Elevations	Theoretical Grade Elevations Adjusted For Grinding
N. End of Appr. Slab	304+71.31	-20.00	422.06	422.08
A3	304+81.31	-20.00	422.03	422.05
A4	304+91.31	-20.00	422.00	422.02
S. End of Appr. Slab	305+01.31	-20.00	421.98	422.00

WEST EDGE OF SHOULDER

Location	Station	Offset	Theoretical Grade Elevations	Theoretical Grade Elevations Adjusted For Grinding
N. End of Appr. Slab	304+81.17	-1.46	421.66	421.68
A3	304+91.17	-1.46	421.63	421.65
A4	305+01.17	-1.46	421.61	421.63
S. End of Appr. Slab	305+11.17	-1.46	421.59	421.61

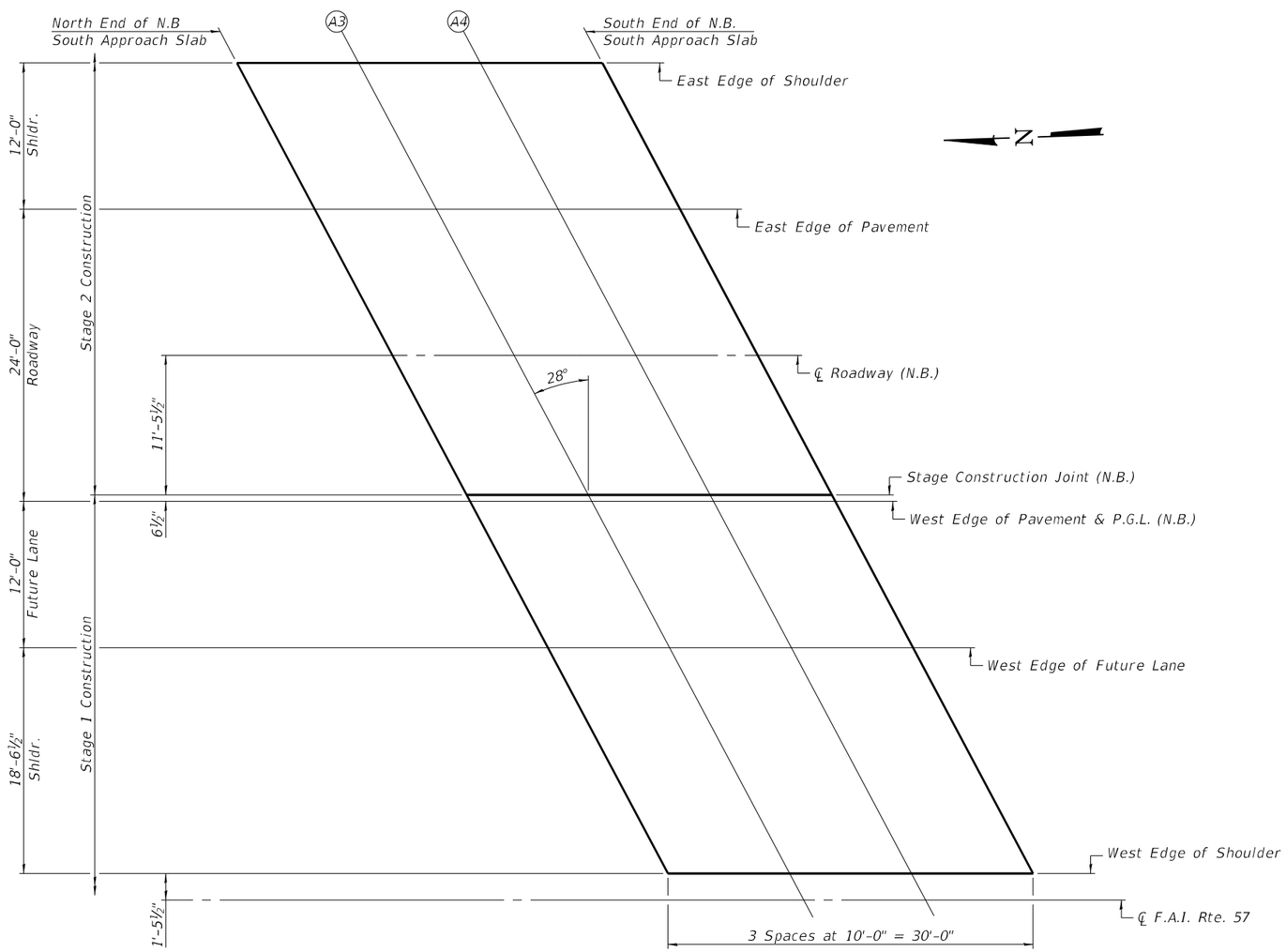

PLAN

FILE NAME: H:\P\221053 - D9 Various Various PTB 199-038\221053.017-I-57 over Marcum\Microstation\028090_0091-78884-013-Top of Approach Slab Elevations - N.B.dgn

OATES ASSOCIATES
www.oatesassociates.com
ILLINOIS DESIGN FIRM LICENSE NO.: 184.001115

USER NAME =	DESIGNED - KP	REVISED -	
	CHECKED - KBC	REVISED -	
PLOT SCALE =	DRAWN - KP	REVISED -	
PLOT DATE = 12/13/2024	CHECKED - KBC	REVISED -	

STATE OF ILLINOIS
DEPARTMENT OF TRANSPORTATION

TOP OF APPROACH SLAB ELEVATIONS
STRUCTURE NO. 028-0091 (N.B.)

SHEET 13 OF 41 SHEETS

F.A.I. RTE.	SECTION	COUNTY	TOTAL SHEETS	SHEET NO.
57	(28-2)B-2	FRANKLIN	598	353

CONTRACT NO. 78884

ILLINOIS | FED. AID PROJECT

EAST EDGE OF SHOULDER

Location	Station	Offset	Theoretical Grade Elevations	Theoretical Grade Elevations Adjusted For Grinding
N. End of Appr. Slab	303+38.83	1.46	422.15	422.17
A1	303+48.83	1.46	422.12	422.14
A2	303+58.83	1.46	422.08	422.10
S. End of Appr. Slab	303+68.83	1.46	422.05	422.07

EAST EDGE OF FUTURE LANE

Location	Station	Offset	Theoretical Grade Elevations	Theoretical Grade Elevations Adjusted For Grinding
N. End of Appr. Slab	303+48.69	20.00	422.49	422.51
A1	303+58.69	20.00	422.45	422.47
A2	303+68.69	20.00	422.42	422.44
S. End of Appr. Slab	303+78.69	20.00	422.38	422.40

EAST EDGE OF PAVEMENT & P.G.L. (S.B.)

Location	Station	Offset	Theoretical Grade Elevations	Theoretical Grade Elevations Adjusted For Grinding
N. End of Appr. Slab	303+55.07	32.00	422.71	422.73
A1	303+65.07	32.00	422.67	422.69
A2	303+75.07	32.00	422.64	422.66
S. End of Appr. Slab	303+85.07	32.00	422.60	422.62

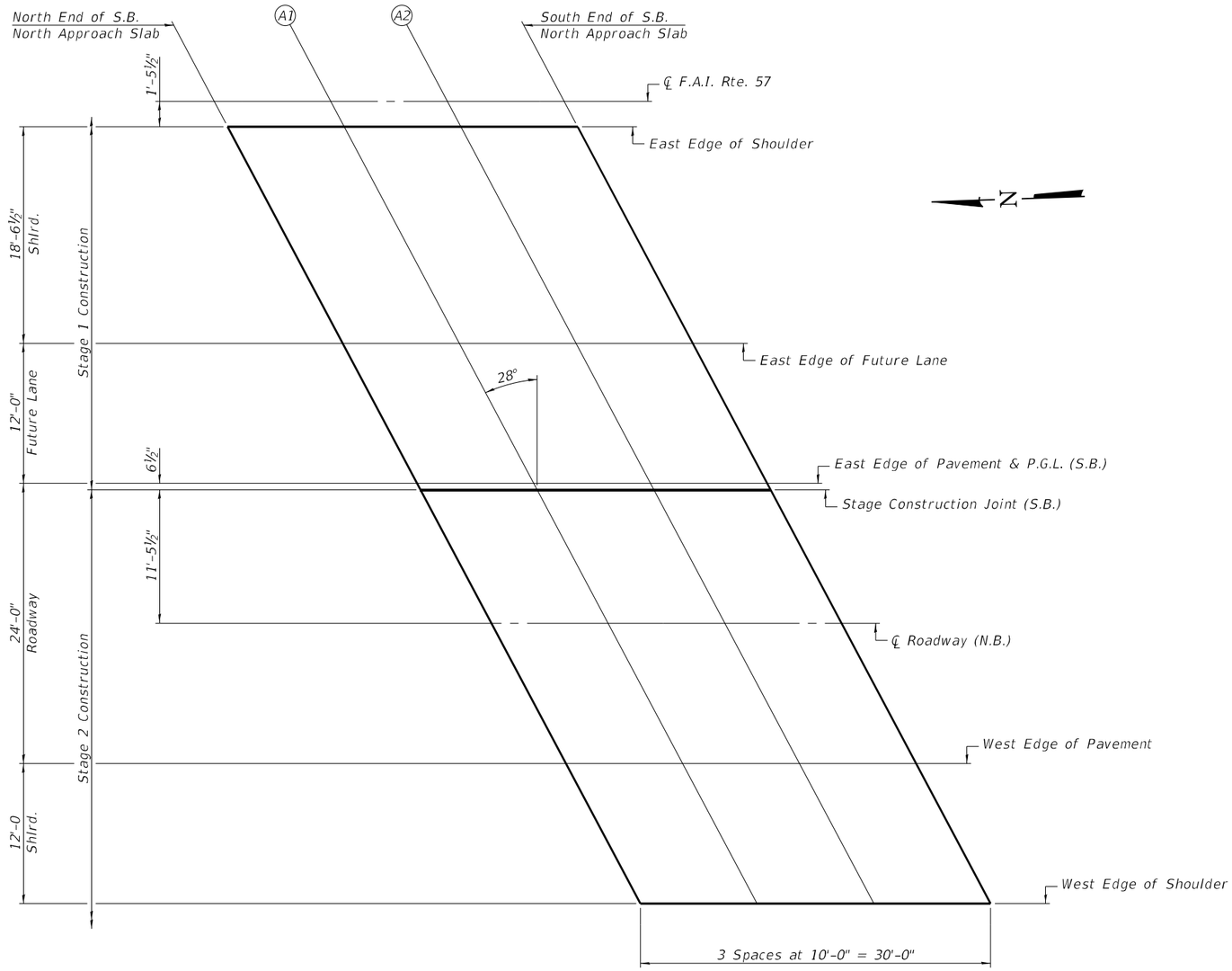

PLAN

STAGE CONSTRUCTION LINE (S.B.)

Location	Station	Offset	Theoretical Grade Elevations	Theoretical Grade Elevations Adjusted For Grinding
N. End of Appr. Slab	303+55.36	32.54	422.71	422.73
A1	303+65.36	32.54	422.68	422.70
A2	303+75.36	32.54	422.64	422.66
S. End of Appr. Slab	303+85.36	32.54	422.61	422.63

℄ ROADWAY (S.B.)

Location	Station	Offset	Theoretical Grade Elevations	Theoretical Grade Elevations Adjusted For Grinding
N. End of Appr. Slab	303+61.45	44.00	422.86	422.88
A1	303+71.45	44.00	422.83	422.85
A2	303+81.45	44.00	422.79	422.81
S. End of Appr. Slab	303+91.45	44.00	422.76	422.78

WEST EDGE OF PAVEMENT

Location	Station	Offset	Theoretical Grade Elevations	Theoretical Grade Elevations Adjusted For Grinding
N. End of Appr. Slab	303+67.83	56.00	422.66	422.68
A1	303+77.83	56.00	422.63	422.65
A2	303+87.83	56.00	422.59	422.61
S. End of Appr. Slab	303+97.83	56.00	422.56	422.58

WEST EDGE OF SHOULDER

Location	Station	Offset	Theoretical Grade Elevations	Theoretical Grade Elevations Adjusted For Grinding
N. End of Appr. Slab	303+74.21	68.00	422.40	422.42
A1	303+84.21	68.00	422.37	422.39
A2	303+94.21	68.00	422.33	422.35
S. End of Appr. Slab	304+04.21	68.00	422.30	422.32

EAST EDGE OF SHOULDER

Location	Station	Offset	Theoretical Grade Elevations	Theoretical Grade Elevations Adjusted For Grinding
N. End of Appr. Slab	304+82.72	1.46	421.65	421.67
A3	304+92.72	1.46	421.62	421.64
A4	305+02.72	1.46	421.59	421.61
S. End of Appr. Slab	305+12.72	1.46	421.56	421.58

EAST EDGE OF FUTURE LANE

Location	Station	Offset	Theoretical Grade Elevations	Theoretical Grade Elevations Adjusted For Grinding
N. End of Appr. Slab	304+92.58	20.00	421.99	422.01
A3	305+02.58	20.00	421.96	421.98
A4	305+12.58	20.00	421.93	421.95
S. End of Appr. Slab	305+22.58	20.00	421.91	421.93

EAST EDGE OF PAVEMENT & P.G.L. (S.B.)

Location	Station	Offset	Theoretical Grade Elevations	Theoretical Grade Elevations Adjusted For Grinding
N. End of Appr. Slab	304+98.96	32.00	422.21	422.23
A3	305+08.96	32.00	422.18	422.20
A4	305+18.96	32.00	422.16	422.18
S. End of Appr. Slab	305+28.96	32.00	422.14	422.16

STAGE CONSTRUCTION LINE (S.B.)

Location	Station	Offset	Theoretical Grade Elevations	Theoretical Grade Elevations Adjusted For Grinding
N. End of Appr. Slab	304+99.25	32.54	422.22	422.24
A3	305+09.25	32.54	422.19	422.21
A4	305+19.25	32.54	422.17	422.19
S. End of Appr. Slab	305+29.25	32.54	422.15	422.17

℄ ROADWAY (S.B.)

Location	Station	Offset	Theoretical Grade Elevations	Theoretical Grade Elevations Adjusted For Grinding
N. End of Appr. Slab	305+05.34	44.00	422.37	422.39
A3	305+15.34	44.00	422.35	422.37
A4	305+25.34	44.00	422.33	422.35
S. End of Appr. Slab	305+35.34	44.00	422.32	422.34

WEST EDGE OF PAVEMENT

Location	Station	Offset	Theoretical Grade Elevations	Theoretical Grade Elevations Adjusted For Grinding
N. End of Appr. Slab	305+11.72	56.00	422.18	422.20
A3	305+21.72	56.00	422.16	422.18
A4	305+31.72	56.00	422.14	422.16
S. End of Appr. Slab	305+41.72	56.00	422.13	422.15

WEST EDGE OF SHOULDER

Location	Station	Offset	Theoretical Grade Elevations	Theoretical Grade Elevations Adjusted For Grinding
N. End of Appr. Slab	305+18.10	68.00	421.92	421.94
A3	305+28.10	68.00	421.91	421.93
A4	305+38.10	68.00	421.89	421.91
S. End of Appr. Slab	305+48.10	68.00	421.89	421.91

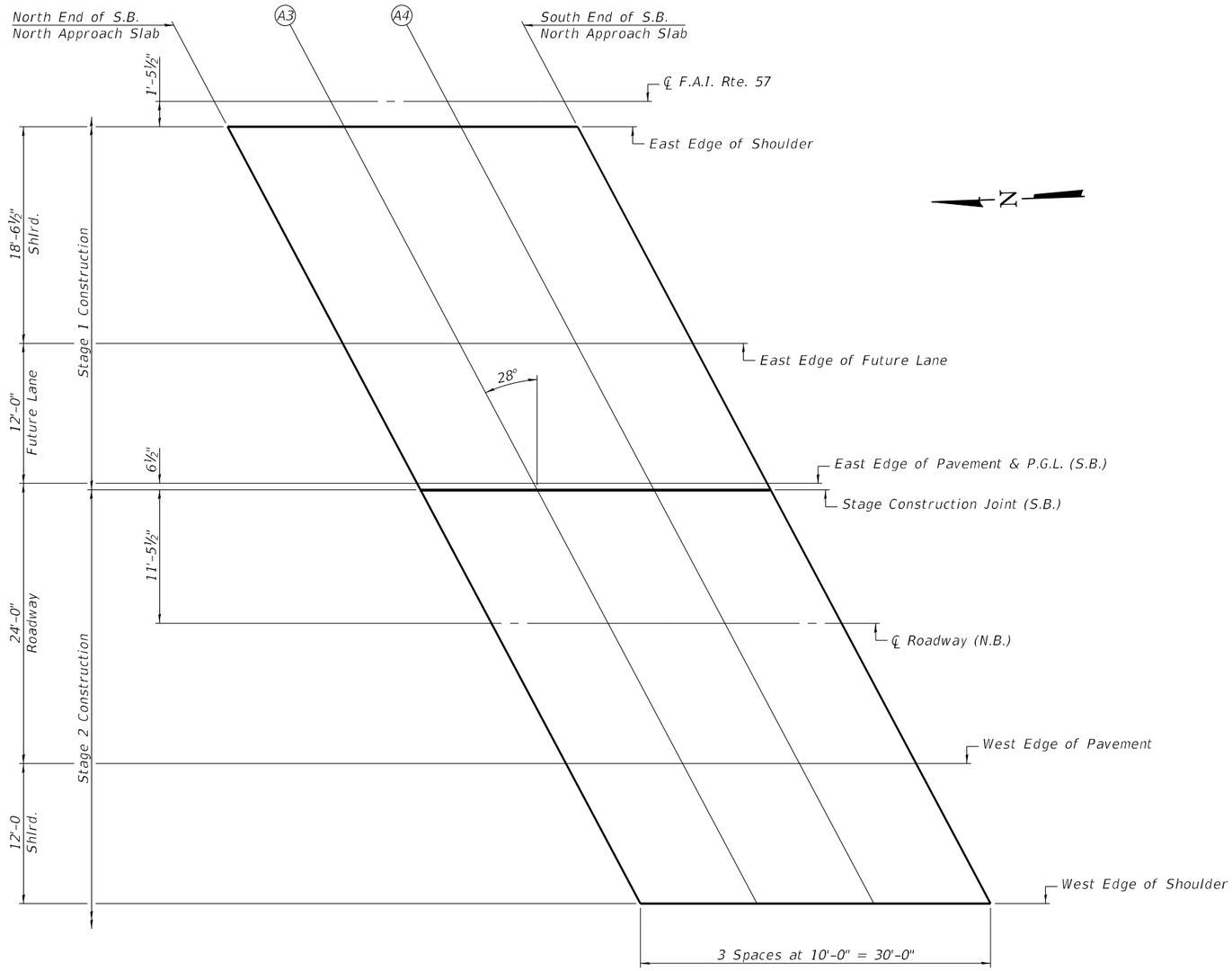

PLAN

FILE NAME: H:\PL21053 - D9 Various Various PTB 199-038 221053.017-I-57 over Marcum\Microsiation\0280090_0091-78884-015-Top of Approach Slab Elevations - S.B.dgn

OATES ASSOCIATES
www.oatesassociates.com
ILLINOIS DESIGN FIRM LICENSE NO.: 184.001115

USER NAME =	DESIGNED - KP	REVISED -	
	CHECKED - KBC	REVISED -	
PLOT SCALE =	DRAWN - KP	REVISED -	
PLOT DATE = 12/13/2024	CHECKED - KBC	REVISED -	

STATE OF ILLINOIS
DEPARTMENT OF TRANSPORTATION

TOP OF APPROACH SLAB ELEVATIONS
STRUCTURE NO. 028-0090 (S.B.)

SHEET 15 OF 41 SHEETS

F.A.I. RTE.	SECTION	COUNTY	TOTAL SHEETS	SHEET NO.
57	(28-2)B-2	FRANKLIN	598	355
		CONTRACT NO. 78884		
	ILLINOIS	FED. AID PROJECT		

Notes:
1. For Section A-A, see sheet 20 of 41.
2. See sheets 18 & 19 of 41 for Superstructure Details and Bill of Material.
3. Bars indicated thus 66 x 4-#5 etc. indicates 66 lines of bars with 4 lengths per line.
4. See Field Cutting Diagram on Sheet 19 of 41.
5. For details of Bar Splicers, see sheet 37 of 41.
6. For location of floor drains, see sheet 1 of 41.
7. Prior to grinding.
8. After grinding.

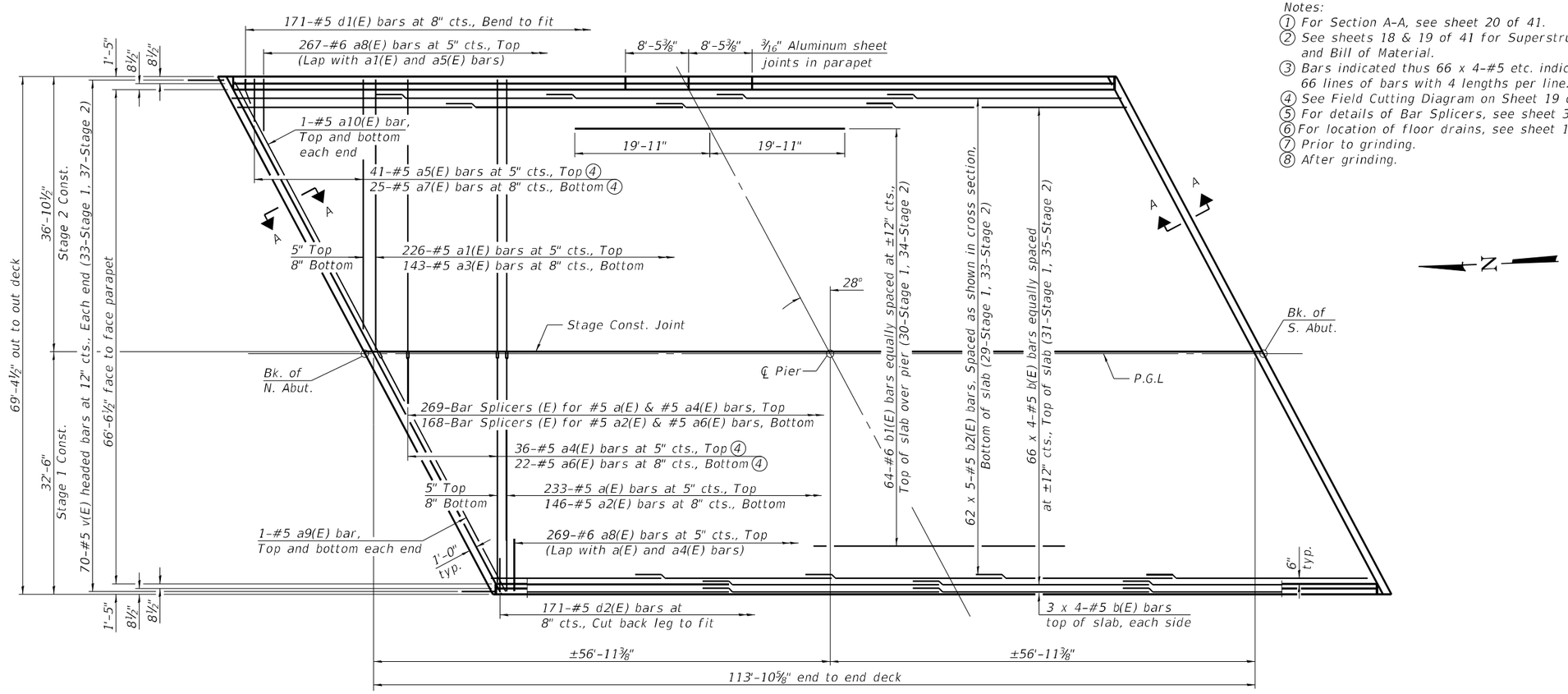

PLAN

MINIMUM BAR LAP

#5 bar = 3'-6"
#6 bar = 3'-7"

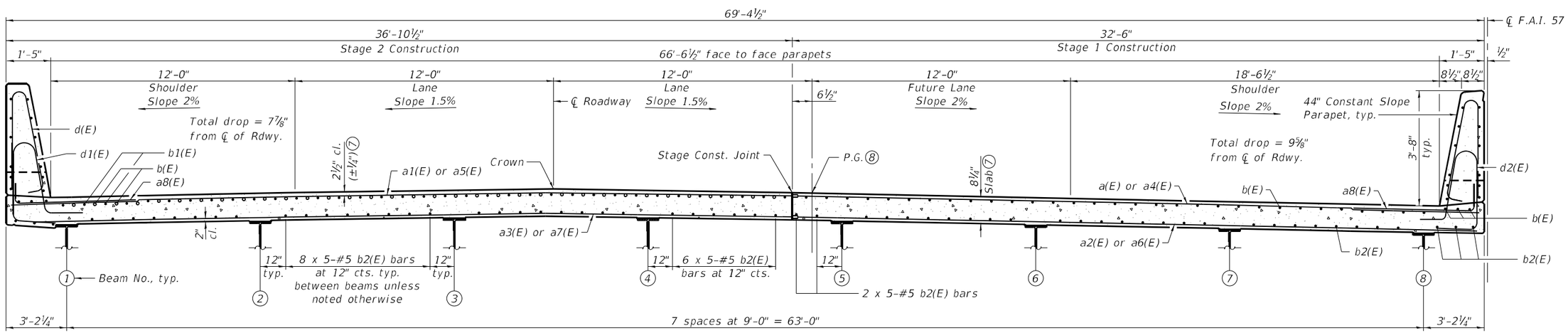

CROSS SECTION

(Looking South)

NEAR PIER

NEAR MIDSPAN

Notes:
1. For Section A-A, see sheet 20 of 41.
2. See sheet 18 & 19 of 41 for Superstructure Details and Bill of Material.
3. Bars indicated thus 66 x 4-#5 etc. indicates 66 lines of bars with 4 lengths per line.
4. See Field Cutting Diagram on Sheet 19 of 41.
5. For details of Bar Splicers, see sheet 37 of 41.
6. For location of floor drains, see sheet 1 of 41.
7. Prior to grinding.
8. After grinding.

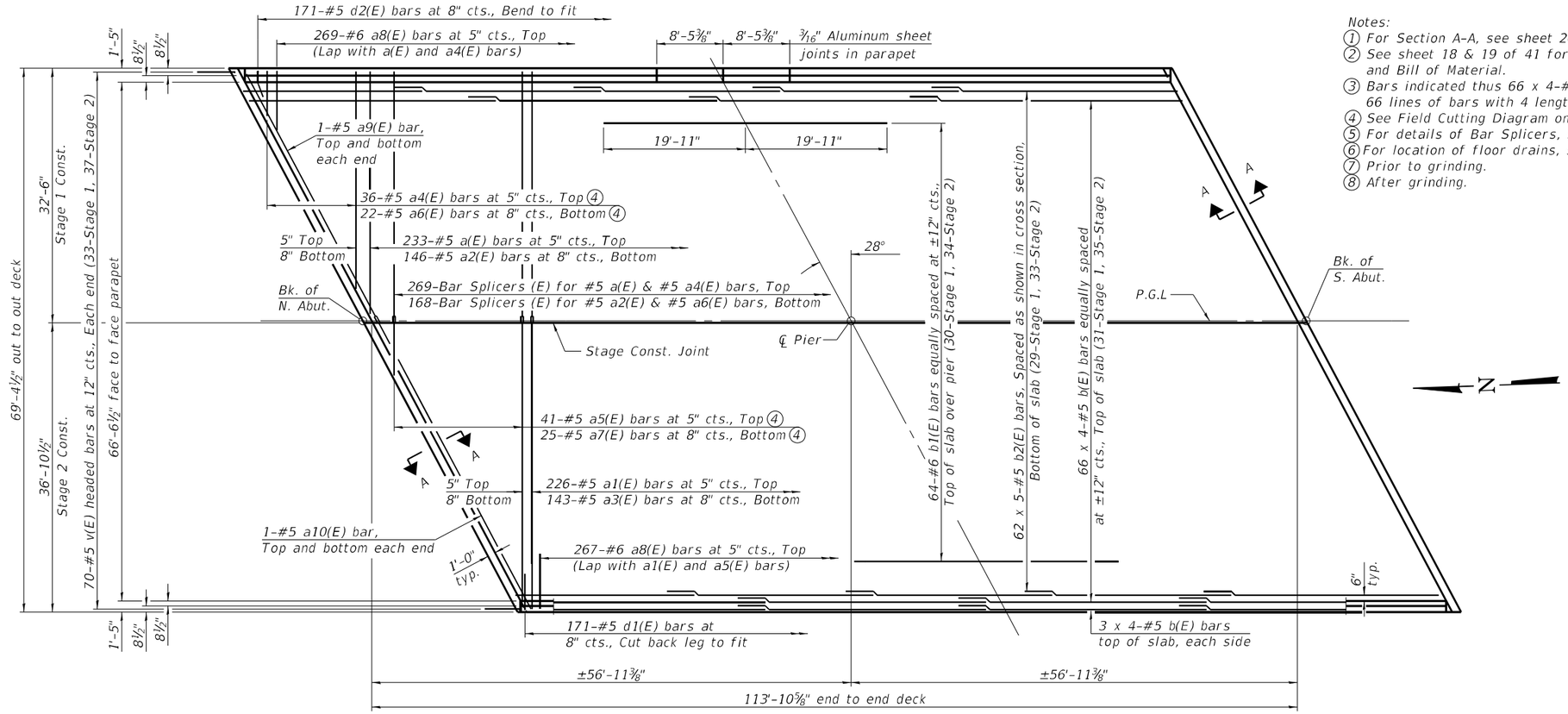

PLAN

MINIMUM BAR LAP

#5 bar = 3'-6"
#6 bar = 3'-7"

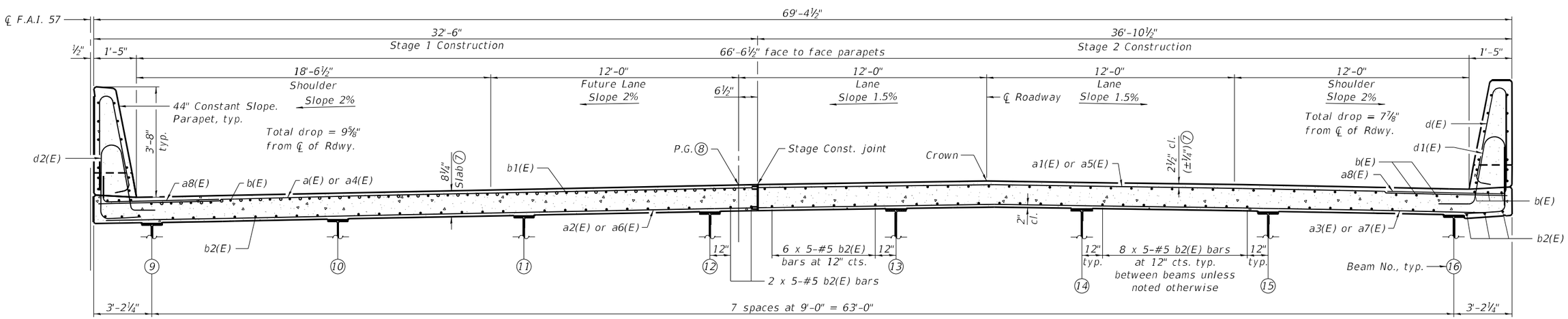

NEAR PIER

CROSS SECTION
(Looking South)

NEAR MIDSPAN

OATES ASSOCIATES www.oatesassociates.com ILLINOIS DESIGN FIRM LICENSE NO.: 184.001115	USER NAME =	DESIGNED - KP	REVISED -	STATE OF ILLINOIS DEPARTMENT OF TRANSPORTATION	SUPERSTRUCTURE STRUCTURE NO. 028-0090 (S.B.)
		CHECKED - KBC	REVISED -		
	PLOT SCALE =	DRAWN - KP	REVISED -		
	PLOT DATE = 12/13/2024	CHECKED - KBC	REVISED -		SHEET 17 OF 41 SHEETS

F.A.I. RTE.	SECTION	COUNTY	TOTAL SHEETS	SHEET NO.
57	(28-2)B-2	FRANKLIN	598	357
		CONTRACT NO. 78884		
		ILLINOIS	FED. AID PROJECT	

FILE NAME: H:\P\221053 - D9 Various Various PTB 199-038\221053.017-I-57 over Marcum\Microstation\0280090_0091-78884-017-Superstructure - S.B.dgn

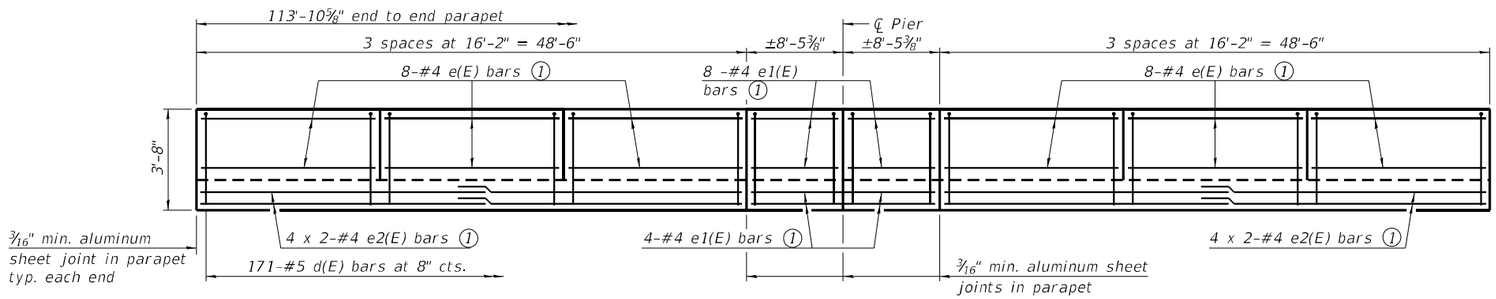

INSIDE ELEVATION OF PARAPET

MINIMUM BAR LAP

#4 bar = 2'-5"

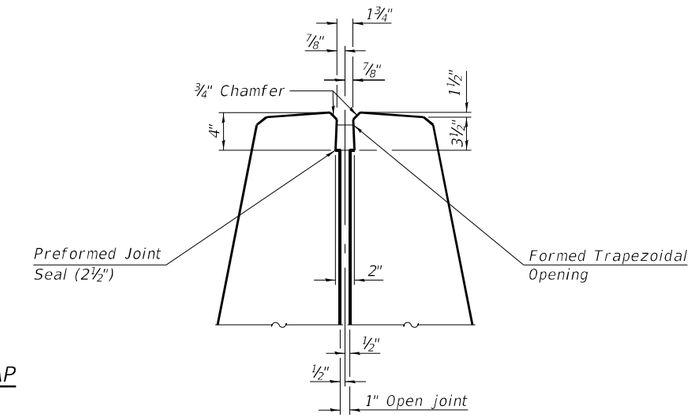

DETAIL A

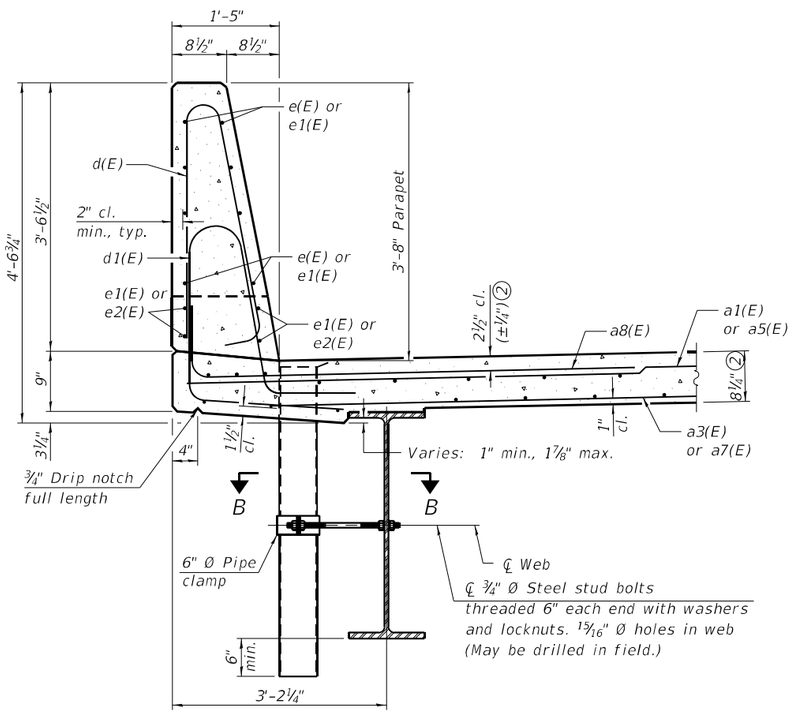

SECTION THRU EAST PARAPET - NORTHBOUND

(Southbound West Parapet Similar)

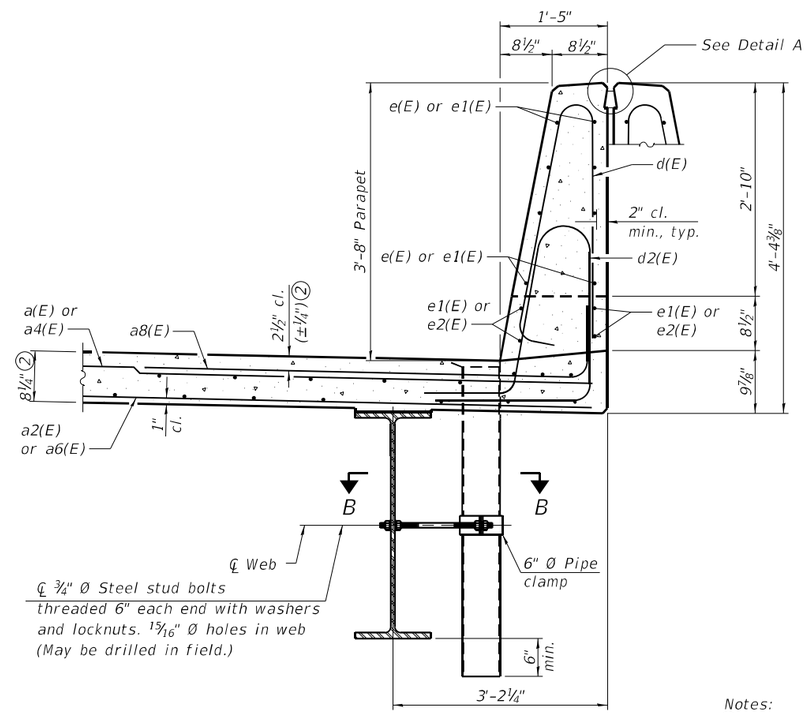

SECTION THRU WEST PARAPET - NORTHBOUND

(Southbound East Parapet Similar)

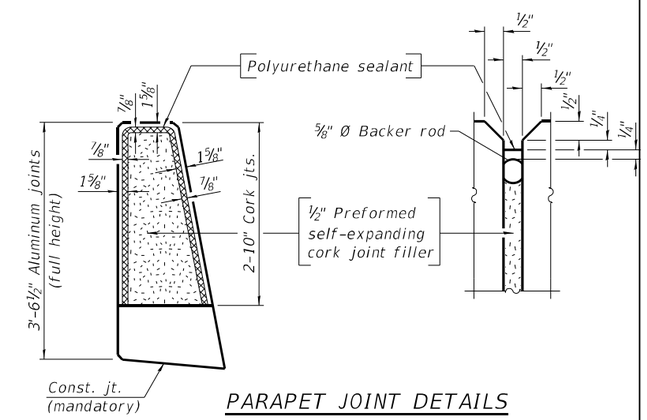

PARAPET JOINT DETAILS

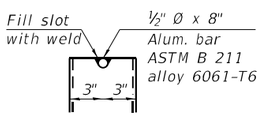

ALUMINUM TUBE

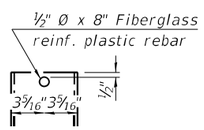

FIBERGLASS PIPE

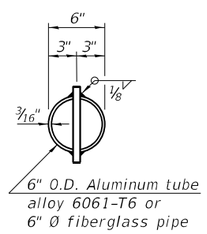

TOP PLAN

(Showing aluminum tube)

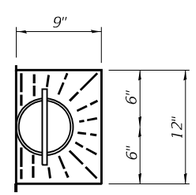

TOP PLAN

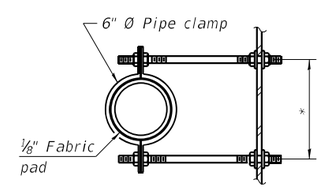

SECTION B-B

*Dimension as required by pipe clamp

Notes:

1. See Sections Thru Parapet.
2. Prior to grinding.
3. Bars indicated thus 4 x 2-#4 etc. indicates 4 lines of bars with 2 lengths per line.
4. The 3/16" aluminum sheet shall be ASTM B 209 alloy 3003-H14 and coated with 5 mils of either bitumen paint or epoxy paint to minimize reaction with wet concrete. Cost included with Concrete Superstructure.
5. The polyurethane sealant shall be according to Article 1050.04 of the Standard Specifications and the color shall be gray.
6. Fiberglass pipe shall conform to ASTM D2996, with short-time rupture strength hoop tensile stress of 30,000 p.s.i. minimum.
7. The Inorganic Zinc Rich Primer / Acrylic / Acrylic Paint System shall be used for shop and field painting of the exterior surfaces of the floor drains according to Article 506. The color of the final finish coat shall be gray, Munsell No 5B 7/1. The exterior surfaces of the drains shall be cleaned according to the Society of Protective Coating's Spec. SSPC-SP1 prior to painting. Cost shall be included with Floor Drains.
8. The top portion of aluminum floor drains shall be coated with 5 mils of either bitumen paint or epoxy paint to minimize reaction with wet concrete.
9. The clamping device shall be galvanized according to AASHTO M 232. Cost of clamping device included with Floor Drains.

Notes:
(1) Bar terminators paid for separately. See Total Bill of Material.

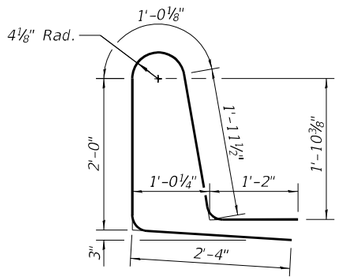

BAR d1(E)

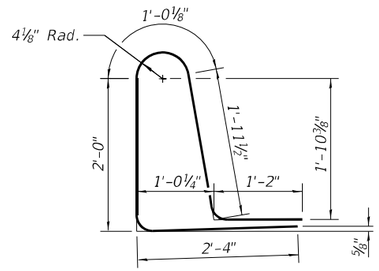

BAR d2(E)

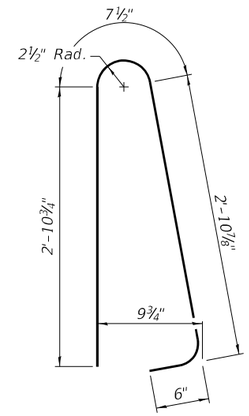

BAR d(E)

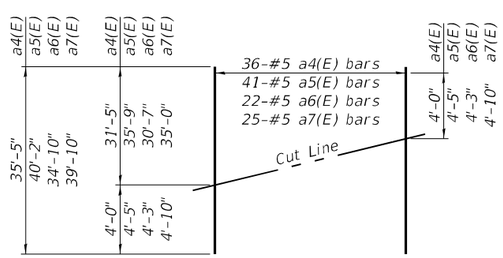

FIELD CUTTING DIAGRAM

Order a4(E), a5(E), a6(E) and a7(E) bars full length. Cut as shown and use remainder of bars in opposite end of deck.

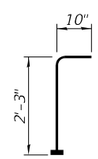

BAR v(E)
(Headed)
(280-#5 Bar Terminators)

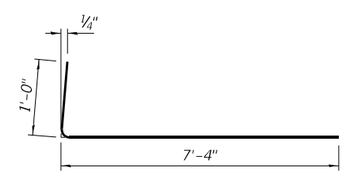

BAR a8(E)

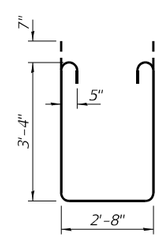

BAR s1(E)

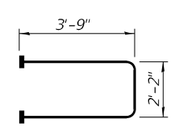

BAR s(E)
(Headed)
(496-#5 Bar Terminators)

NORTHBOUND & SOUTHBOUND SUPERSTRUCTURE BILL OF MATERIAL

Bar	No.	Size	Length	Shape
a(E)	466	#5	32'-2"	
a1(E)	452	#5	36'-7"	
a2(E)	292	#5	31'-10"	
a3(E)	286	#5	36'-3"	
a4(E)	72	#5	35'-5"	
a5(E)	82	#5	40'-2"	
a6(E)	44	#5	34'-10"	
a7(E)	50	#5	39'-10"	
a8(E)	1,072	#6	8'-4"	
a9(E)	8	#5	36'-1"	
a10(E)	8	#5	41'-0"	
b(E)	576	#5	31'-0"	
b1(E)	128	#6	39'-10"	
b2(E)	620	#5	25'-6"	
d(E)	684	#5	7'-0"	
d1(E)	342	#5	8'-6"	
d2(E)	342	#5	8'-6"	
e(E)	192	#4	15'-10'	
e1(E)	96	#4	8'-1"	
e2(E)	64	#4	25'-5"	
m(E)	16	#6	36'-5"	
m1(E)	16	#6	41'-4"	
m2(E)	96	#6	9'-9"	
m3(E)	32	#6	2'-10"	
m4(E)	16	#6	7'-2"	
s(E)	248	#5	9'-8"	
s1(E)	248	#5	10'-6"	
v(E)	280	#5	3'-1"	
Reinforcement Bars, Epoxy Coated			Lbs.	144,390
Concrete Superstructure			Cu. Yds.	600.8

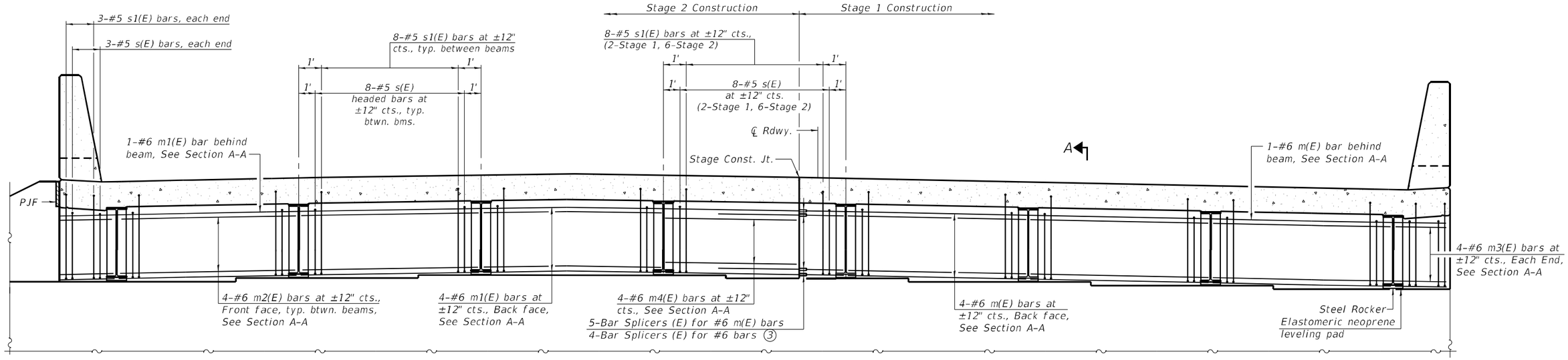

DIAPHRAGM AT ABUTMENT

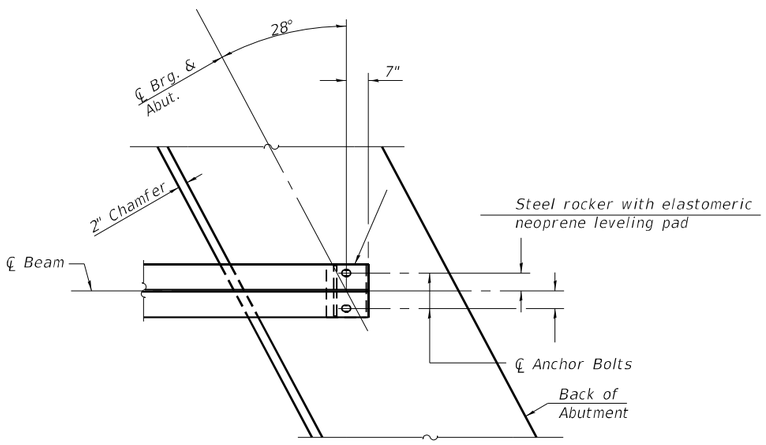

PLAN AT ABUTMENT

(Showing bottom flange of beam)

Notes:

1. See sheet 19 of 41 for superstructure details and Bill of Material.
2. See sheets 22 & 24 of 41 for PJF details.
3. Use Bar Splicers in place of m2(E) bars between beam and stage construction joint. Cut Bar Splicers as required to provide adequate clearance to beam.
4. For details of Bar Splicers, see sheet 37 of 41.
5. Control point elevations are taken at top of approach slab seat as shown in View B-B.
6. The approach slab seat shall have a constant slope determined from the control points shown.
7. For details of bars s(E) and s1(E), see sheet 19 of 41.
8. For Bearing details, see sheet 28 of 41.
9. Prior to grinding.
10. The s(E) and s1(E) bars shall be placed parallel to the beams. Spacing for these bars shall be at right angles to the beams.

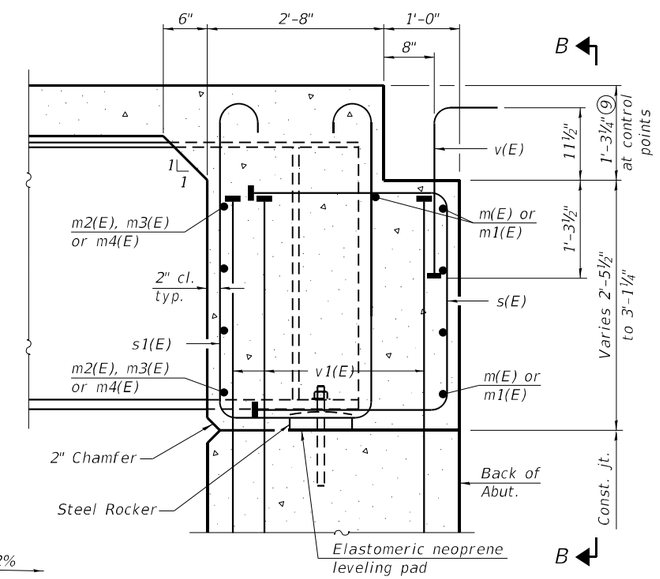

SECTION A-A

(at Rt. ∠'s)

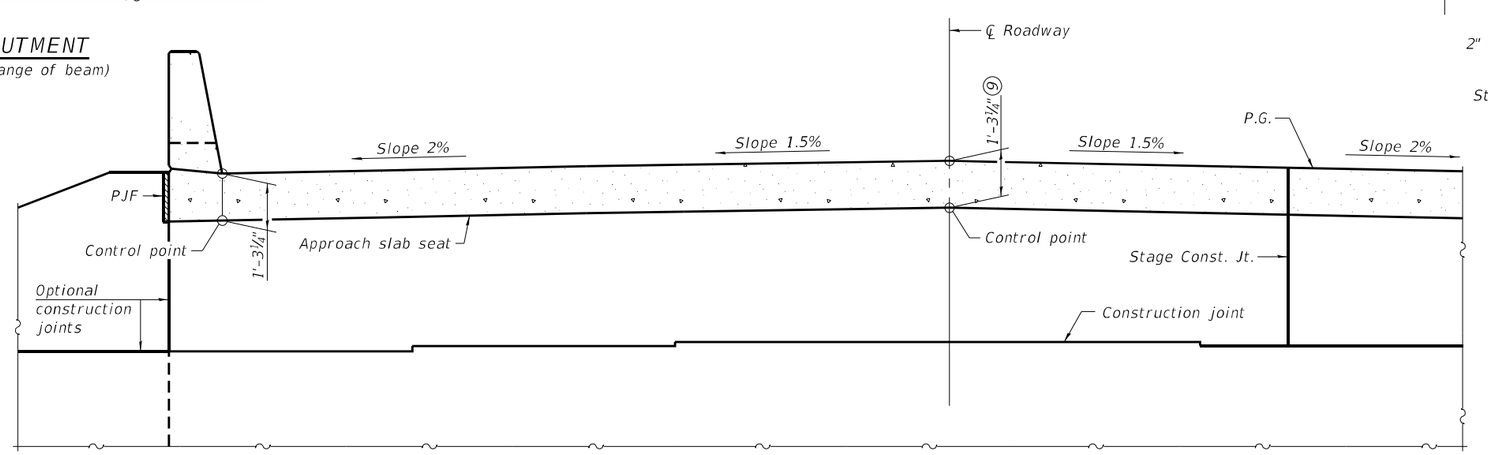

VIEW B-B

OATES ASSOCIATES www.oatesassociates.com ILLINOIS DESIGN FIRM LICENSE NO.: 184.001115	USER NAME =	DESIGNED - KP	REVISED -	STATE OF ILLINOIS DEPARTMENT OF TRANSPORTATION	DIAPHRAGM DETAILS STRUCTURE NO. 028-0090 (S.B.) & 028-0091 (N.B.)	F.A.I. RTE. 57	SECTION (28-2)B-2	COUNTY FRANKLIN	TOTAL SHEETS 598	SHEET NO. 360
		CHECKED - KBC	REVISED -							
	PLOT SCALE =	DRAWN - KP	REVISED -				CONTRACT NO. 78884			
	PLOT DATE = 12/13/2024	CHECKED - KBC	REVISED -		SHEET 20 OF 41 SHEETS		ILLINOIS	FED. AID PROJECT		

FILE NAME: H:\P221053 - D9 Various Various PTB 199-038\221053.017-I-57 over Marcum\Microstation\0280090_0091-78884-020-Abutment Diaphragm Details.dgn

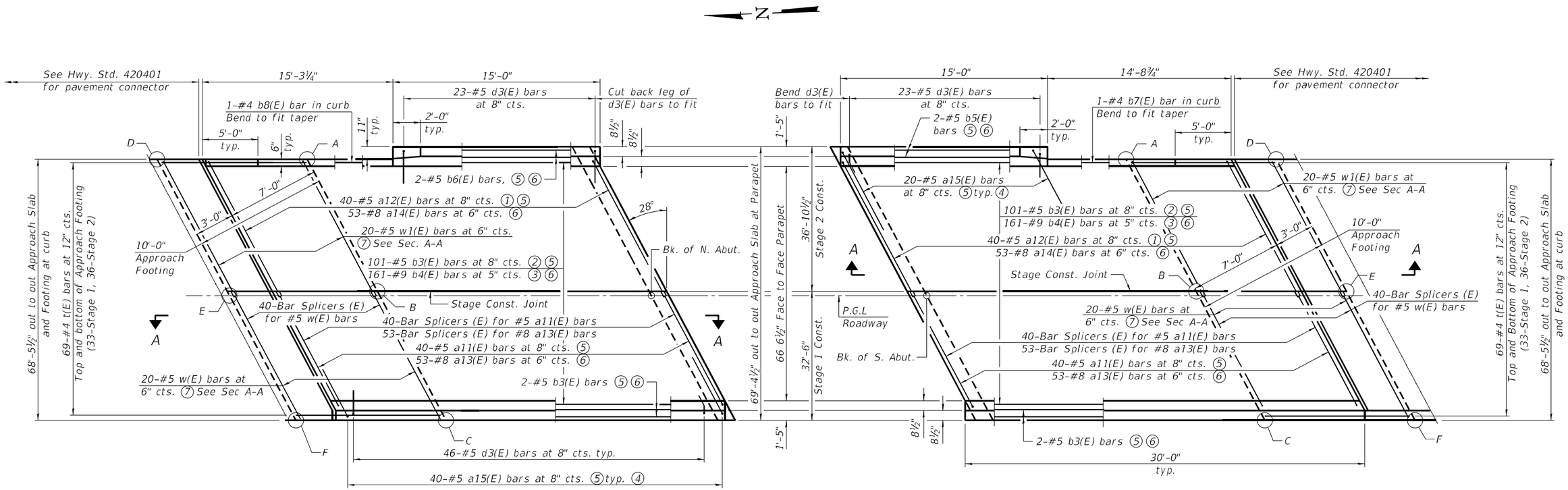

NORTH APPROACH

SOUTH APPROACH

PLAN

Notes:
① Tilt as necessary to fit curb.
② 47-Stage 1, 54-Stage 2.
③ 75-Stage 1, 86-Stage 2.
④ Lap with each a11(E) or a12(E) bar.
⑤ Top of Slab.
⑥ Bottom of Slab.
⑦ Top and Bottom of Approach Footing.
⑧ For Section A-A, see sheet 25 of 41.
⑨ For details of Bar Splicers, see sheet 37 of 41.

TOP AND BOTTOM ELEVATIONS FOR APPROACH FOOTING

North Approach			South Approach		
Point/ Location	Top	Bottom	Point/ Location	Top	Bottom
A	421.35	420.51	A	420.79	420.06
B	421.55	420.71	B	421.01	420.26
C	420.88	420.05	C	420.36	419.60
D	421.39	420.55	D	420.76	420.02
E	421.59	420.75	E	420.98	420.22
F	420.92	420.08	F	420.34	419.57

FILE NAME: H:\P221053 - D9 Various Various PTB 199-038\221053.017-4-57 over Marcum\Microstation\0280090_0091-78884-021-Bridge Approach Slab Details - N.B. Plan.dgn

OATES ASSOCIATES
www.oatesassociates.com
ILLINOIS DESIGN FIRM LICENSE NO.: 184.001115

USER NAME =	DESIGNED - KP	REVISED -	
	CHECKED - KBC	REVISED -	
PLOT SCALE =	DRAWN - KP	REVISED -	
PLOT DATE = 12/13/2024	CHECKED - KBC	REVISED -	

STATE OF ILLINOIS
DEPARTMENT OF TRANSPORTATION

BRIDGE APPROACH SLAB DETAILS
STRUCTURE NO. 028-0091 (N.B.)

SHEET 21 OF 41 SHEETS

F.A.I. RTE.	SECTION	COUNTY	TOTAL SHEETS	SHEET NO.
57	(28-2)B-2	FRANKLIN	598	361
		CONTRACT NO. 78884		
	ILLINOIS	FED. AID PROJECT		

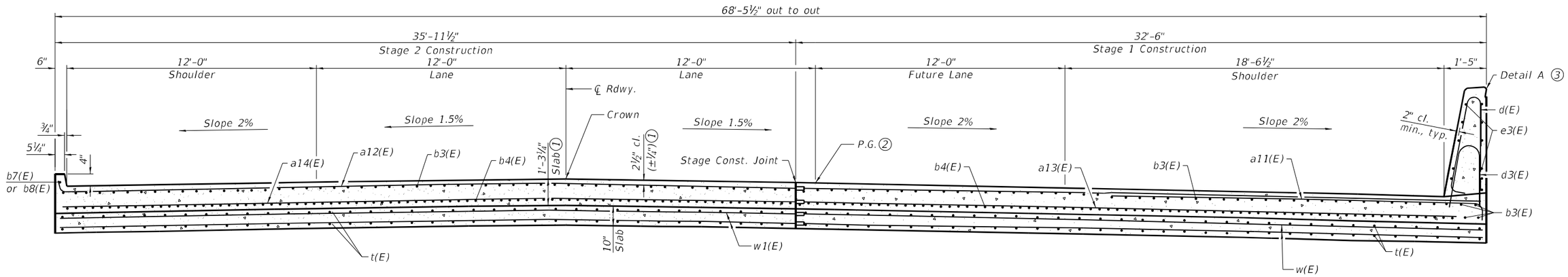

AT APPROACH FOOTING

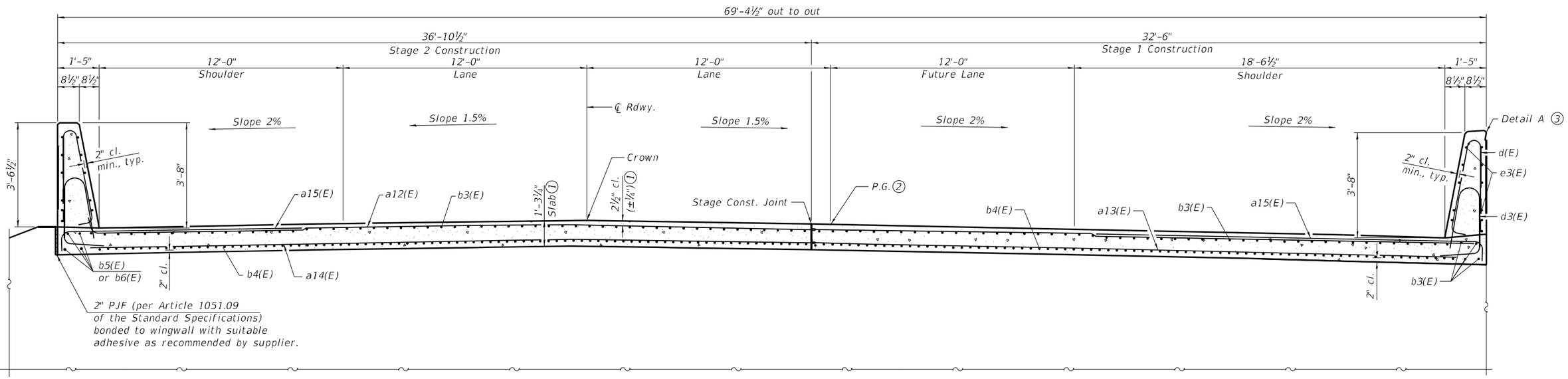

NEAR ABUTMENT

CROSS SECTION

(Looking South)

Notes:
① Prior to grinding.
② After grinding.
③ See page 18 of 41.

FILE NAME: H:\P221053 - D9 Various Various PTB 199-038 221053.017-57 over Marcum\Microstation\0280090_0091-78884-022-Bridge Approach Slab Details - N.B. Cross Section.dgn

OATES ASSOCIATES
www.oatesassociates.com
ILLINOIS DESIGN FIRM LICENSE NO.: 184.001115

USER NAME =	DESIGNED - KP	REVISED -	
	CHECKED - KBC	REVISED -	
PLOT SCALE =	DRAWN - KP	REVISED -	
PLOT DATE = 12/13/2024	CHECKED - KBC	REVISED -	

STATE OF ILLINOIS
DEPARTMENT OF TRANSPORTATION

BRIDGE APPROACH SLAB DETAILS
STRUCTURE NO. 028-0091 (N.B.)

SHEET 22 OF 41 SHEETS

F.A.I. RTE.	SECTION	COUNTY	TOTAL SHEETS	SHEET NO.
57	(28-2)B-2	FRANKLIN	598	362
		CONTRACT NO. 78884		
		ILLINOIS	FED. AID PROJECT	

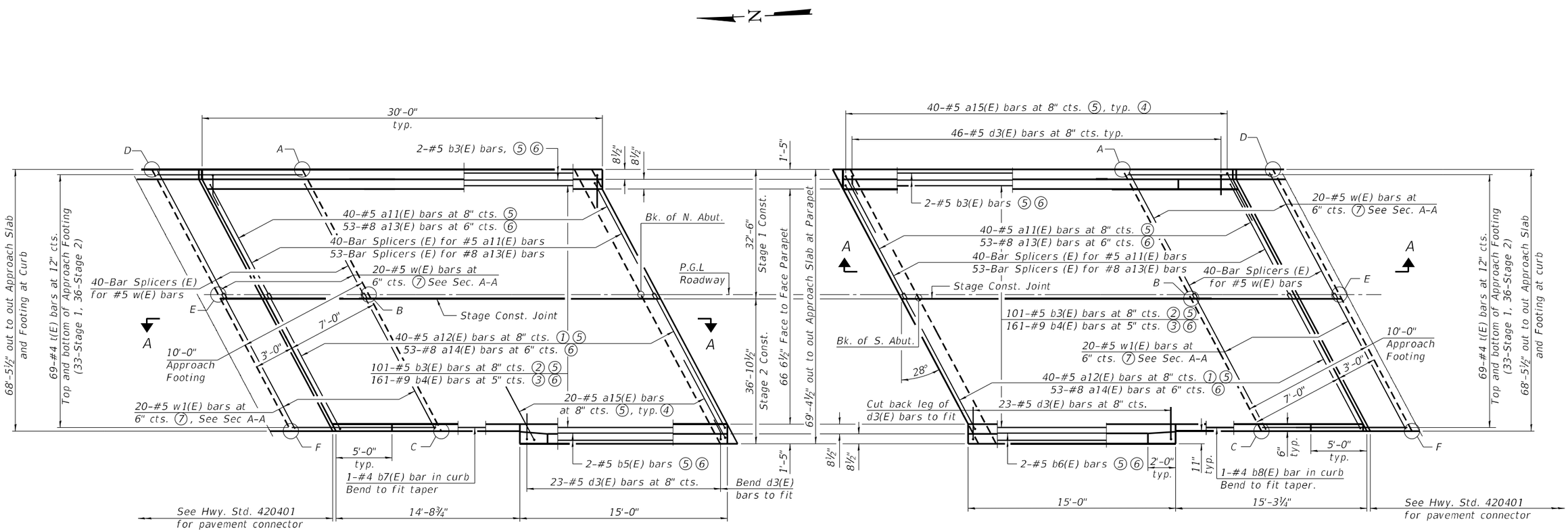

PLAN

Notes:

1. Tilt as necessary to fit curb.
2. 47-Stage 1, 54-Stage 2.
3. 75-Stage 1, 86-Stage 2.
4. Lap with each a11(E) or a12(E) bar.
5. Top of Slab.
6. Bottom of Slab.
7. Top and Bottom of Approach Footing.
8. For Section A-A, see sheet 25 of 41.
9. For details of Bar Splicers, see sheet 37 of 41.

TOP AND BOTTOM ELEVATIONS FOR APPROACH FOOTING

North Approach			South Approach		
Point/ Location	Top	Bottom	Point/ Location	Top	Bottom
A	420.88	420.04	A	420.33	419.50
B	421.43	420.60	B	420.90	420.07
C	421.09	420.26	C	420.61	419.78
D	420.92	420.08	D	420.30	419.47
E	421.47	420.64	E	420.89	420.05
F	421.13	420.30	F	420.60	419.77

FILE NAME: H:\PI\221053 - D9 Various Various PTB 199-038\221053.017-1-57 over Marcum\Microstation\0280090_0091-78884-023-Bridge Approach Slab Details - S.B. Plan.dgn

OATES ASSOCIATES
www.oatesassociates.com
ILLINOIS DESIGN FIRM LICENSE NO.: 184.001115

USER NAME =	DESIGNED - KP	REVISED -	
	CHECKED - KBC	REVISED -	
PLOT SCALE =	DRAWN - KP	REVISED -	
PLOT DATE = 12/13/2024	CHECKED - KBC	REVISED -	

STATE OF ILLINOIS
DEPARTMENT OF TRANSPORTATION

BRIDGE APPROACH SLAB DETAILS
STRUCTURE NO. 028-0090 (S.B.)

SHEET 23 OF 41 SHEETS

F.A.I. RTE.	SECTION	COUNTY	TOTAL SHEETS	SHEET NO.
57	(28-2)B-2	FRANKLIN	598	363
		CONTRACT NO. 78884		
		ILLINOIS	FED. AID PROJECT	

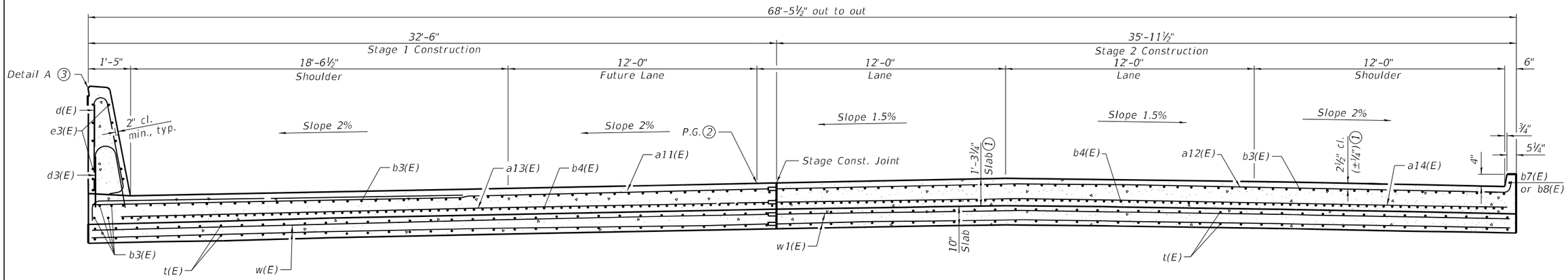

AT APPROACH FOOTING

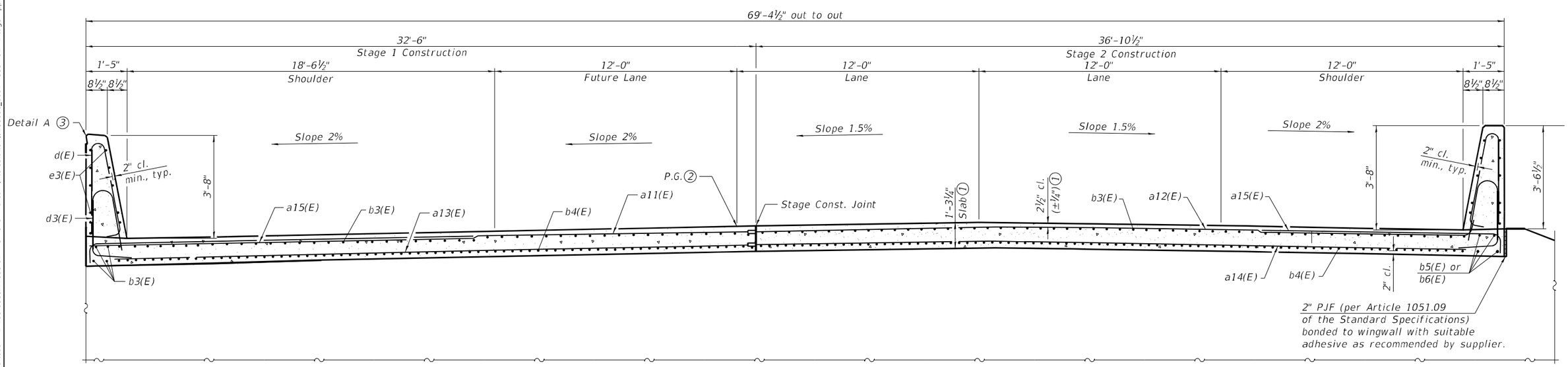

NEAR ABUTMENT

CROSS SECTION

(Looking South)

Notes:
(1) Prior to grinding.
(2) After grinding.
(3) See page 18 of 41.

FILE NAME: H:\P\221053 - D9 Various Various PTB 199-038\221053.017-57 over Marcum\Microstation\0280090_0091-78884-024-Bridge Approach Slab Details - S.B. Cross Section.dgn

OATES ASSOCIATES www.oatesassociates.com ILLINOIS DESIGN FIRM LICENSE NO.: 184.001115	USER NAME =	DESIGNED - KP	REVISED -	STATE OF ILLINOIS DEPARTMENT OF TRANSPORTATION	BRIDGE APPROACH SLAB DETAILS STRUCTURE NO. 028-0090 (S.B.)	F.A.I. RTE.	SECTION	COUNTY	TOTAL SHEETS / SHEET NO.
		CHECKED - KBC	REVISED -			57	(28-2)B-2	FRANKLIN	598 / 364
	PLOT SCALE =	DRAWN - KP	REVISED -					CONTRACT NO. 78884	
	PLOT DATE = 12/13/2024	CHECKED - KBC	REVISED -		SHEET 24 OF 41 SHEETS		ILLINOIS	FED. AID PROJECT	

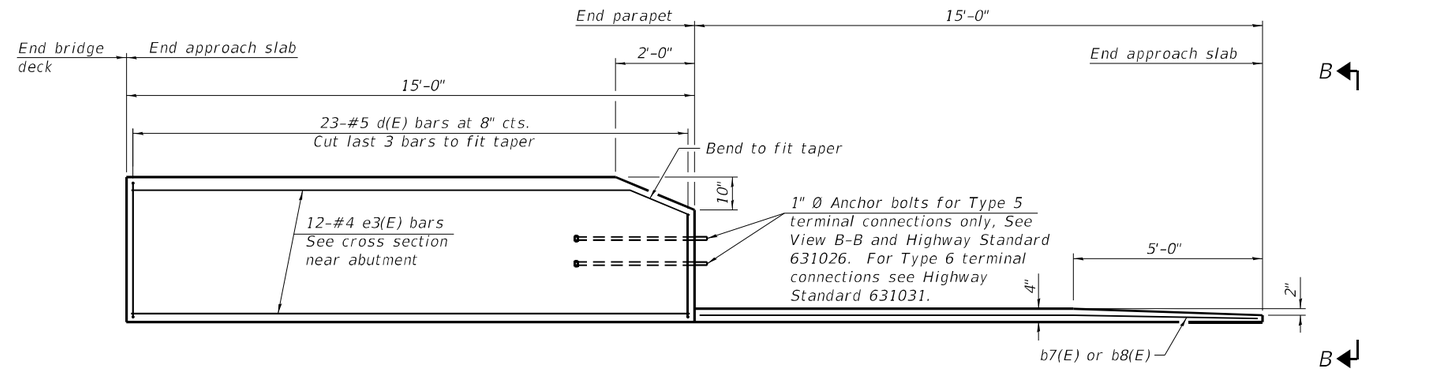

INSIDE ELEVATION OF PARAPET AND CURB

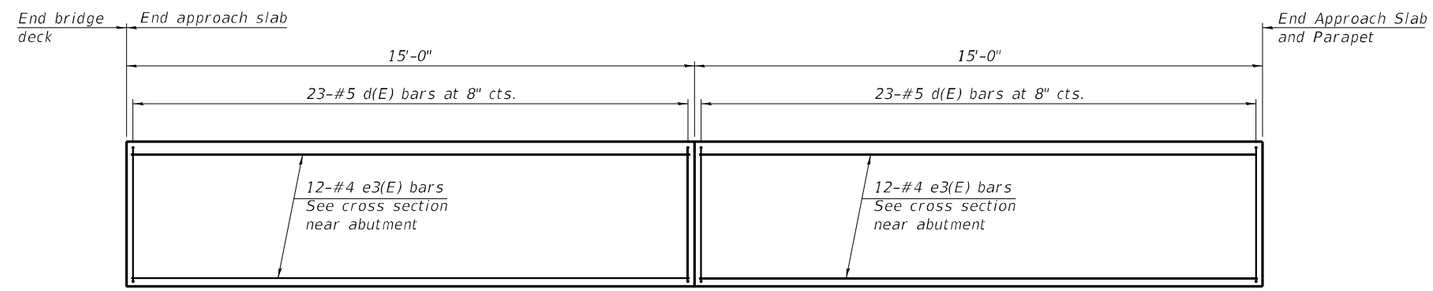

INSIDE ELEVATION OF PARAPET AND CURB ON MEDIAN

Notes:

1. The joint opening shall be adjusted for temperature per Article 520.04 of the Standard Specifications. However, since this detail is for jointless structures, the length of bridge used to calculate the adjustment shall be equal to half the total bridge length plus the length of the bridge approach slab.
2. Parapet concrete shall be paid for as Concrete Superstructure.
3. Approach slab shall be paid for as Concrete Superstructure (Approach Slab).
4. Approach footing concrete shall be paid for as Concrete Structures.
5. The approach footing maximum applied service bearing pressure (Qmax) = 2.0 ksf.
6. Cost of excavation for approach footing included with Concrete Structures.
7. For Granular Backfill for Structures and drainage treatment details, see sheet 2 of 41.
8. Cost included with Concrete Superstructure (Approach Slab).
9. Per manufacturer recommendations.
10. Prior to grinding.
11. Calculated weight of Reinforcement Bars, Epoxy Coated = 16,830 (Substructure)
    142,280 (Superstructure)

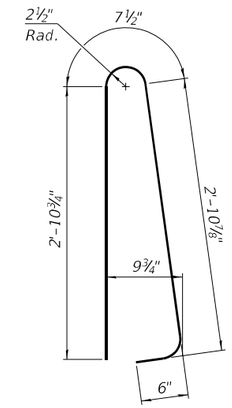

BAR d(E)

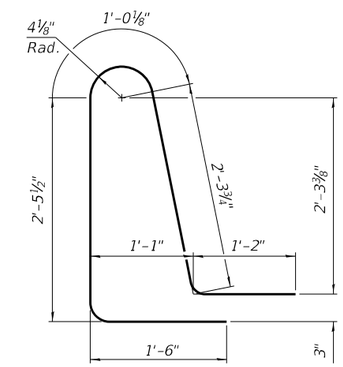

BAR d3(E)

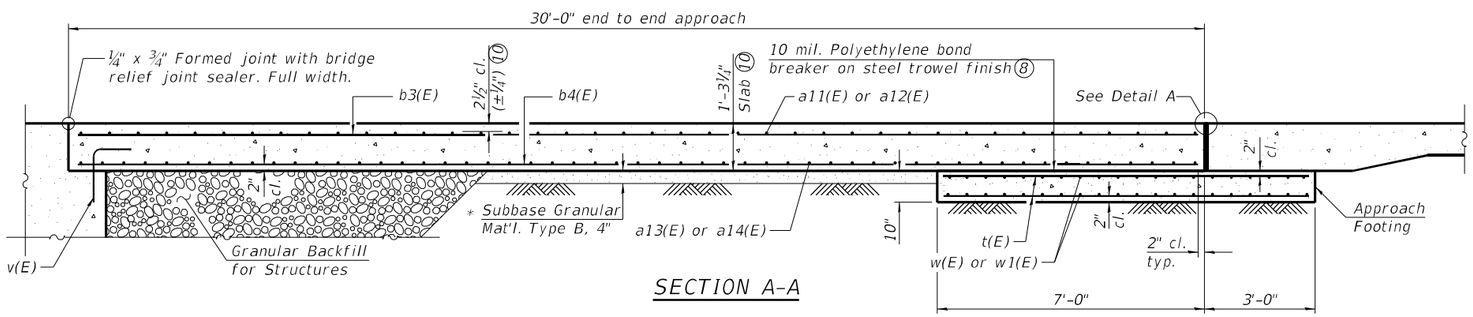

SECTION A-A

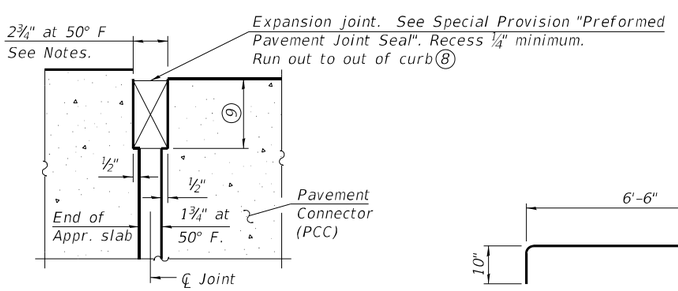

DETAIL A

(at Rt. ∠'s)

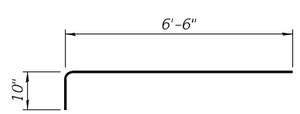

BAR a15(E)

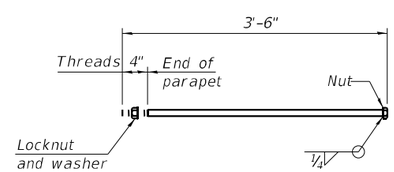

1" Ø ANCHOR BOLT (8)

(Anchor bolt assemblies shall be galvanized according to Article 1006.09 of the Standard Specifications)

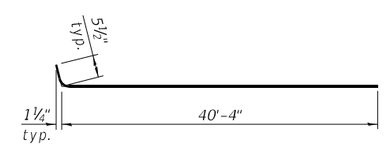

BAR a12(E)

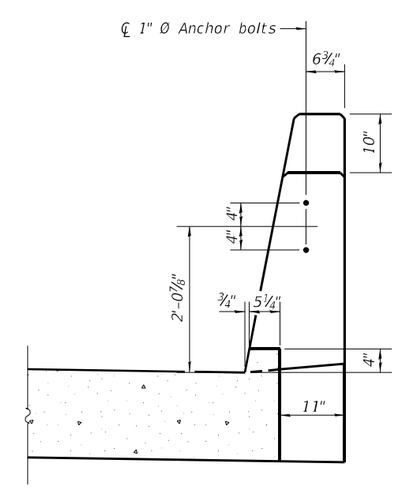

VIEW B-B

FOUR APPROACHES
BILL OF MATERIAL

Bar	No.	Size	Length	Shape
a11(E)	160	#5	36'-5"	
a12(E)	160	#5	40'-10"	
a13(E)	212	#8	36'-5"	
a14(E)	212	#8	40'-4"	
a15(E)	240	#5	7'-4"	
b3(E)	420	#5	29'-8"	
b4(E)	644	#9	29'-8"	
b5(E)	8	#5	14'-7"	
b6(E)	8	#5	13'-10"	
b7(E)	2	#4	14'-4"	
b8(E)	2	#4	14'-7"	
d(E)	276	#5	7'-0"	
d3(E)	276	#5	8'-6"	
e3(E)	144	#4	14'-8"	
t(E)	552	#4	10'-11"	
w(E)	160	#5	36'-5"	
w1(E)	160	#5	40'-4"	
Concrete Superstructure			Cu. Yd.	25.3
Concrete Superstructure (Approach Slab)			Cu. Yd.	385.8
Concrete Structures			Cu. Yd.	97.0
Reinforcement Bars, Epoxy Coated			Pound	159,110

FILE NAME: H:\P\221053 - D9 Various Various PTB 199-038\221053.017-1-57 over Marcum\Microstation\0280090_0091-78884-025-Bridge Approach Slab Details.dgn

OATES ASSOCIATES
www.oatesassociates.com
ILLINOIS DESIGN FIRM LICENSE NO.: 184.001115

USER NAME =	DESIGNED - KP	REVISED -	
	CHECKED - KBC	REVISED -	
PLOT SCALE =	DRAWN - KP	REVISED -	
PLOT DATE = 12/13/2024	CHECKED - KBC	REVISED -	

STATE OF ILLINOIS
DEPARTMENT OF TRANSPORTATION

BRIDGE APPROACH SLAB DETAILS
STRUCTURE NO. 028-0090 (S.B.) & 028-0091 (N.B.)

SHEET 25 OF 41 SHEETS

F.A.I. RTE.	SECTION	COUNTY	TOTAL SHEETS	SHEET NO.
57	(28-2)B-2	FRANKLIN	598	365
		CONTRACT NO. 78884		
	ILLINOIS	FED. AID PROJECT		

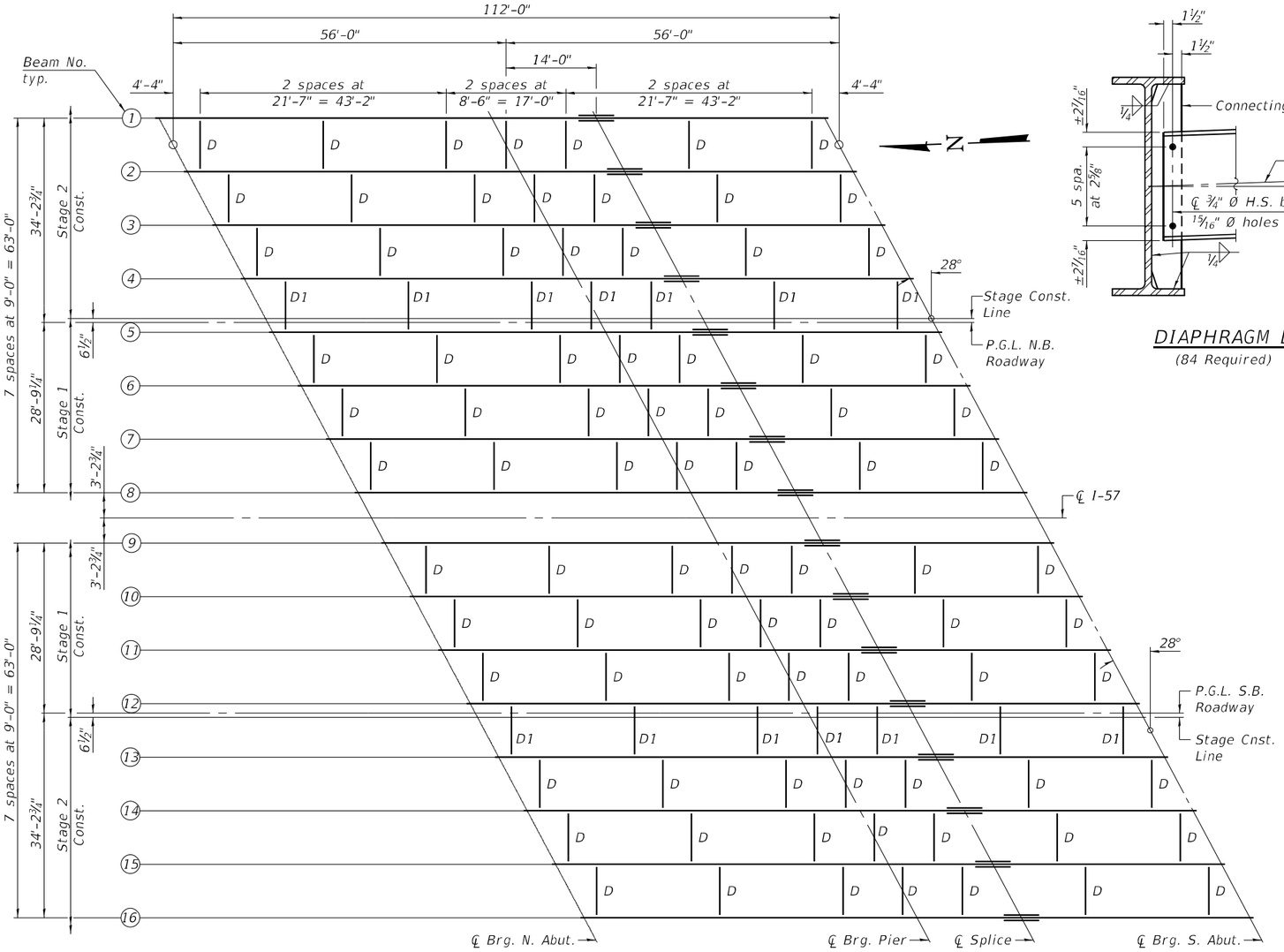

FRAMING PLAN

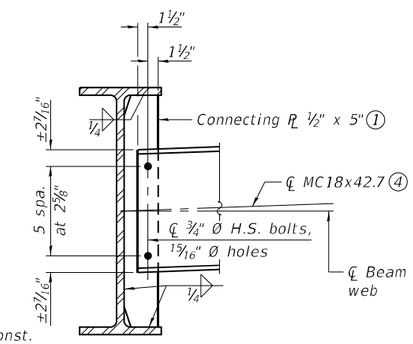

DIAPHRAGM D

(84 Required)

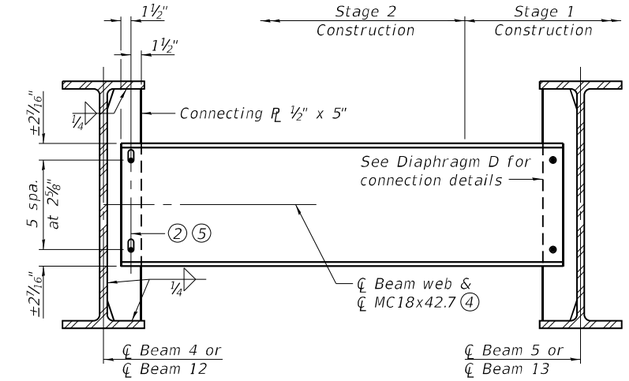

DIAPHRAGM D1 ⑤

(Showing final position)
(14 Required)

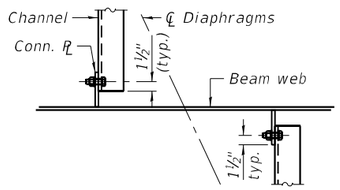

DETAIL A

Notes:

① Do not provide connecting plate on exterior face of fascia beams.

② ℄ ¾" Ø H.S. bolts, 15/16" Ø holes in connecting plate, and 1 3/16" x 1⅞" vertical slotted holes in channel. Two 5/16" structural plate washers required for each set of slotted holes.

③ Two hardened washers required for each set of oversized holes.

④ Alternate channels of equal depth and larger weight are permitted to facilitate material acquisition. Alternate channels, if utilized, shall be provided at no additional cost to the Department.

⑤ The Fabricator shall detail slotted hole locations on channel to allow for differential deflection during Stage 2 deck and parapet pour. The bolts shall be finger tight until the Stage 2 deck and parapet concrete is poured, allowing the Stage 2 beams to deflect vertically without stressing the diaphragm or Stage 1 beams. The diaphragm connection shall be detailed so that the centerline of beam web and centerline of diaphragm channel align in their final position.

⑥ All diaphragms shall be installed as steel is erected and secured with erection pins and bolts except as otherwise noted. Individual diaphragms at support may be temporarily disconnected to install bearing anchor bolts.

⑦ Load carrying components designated "CVN" shall conform to the Charpy-V-Notch Impact Energy Requirement, Zone 2.

⑧ AASHTO M 270 Grade 50 Steel.

⑨ Bearing Stiffeners, PL 1" x 5" (One each side).

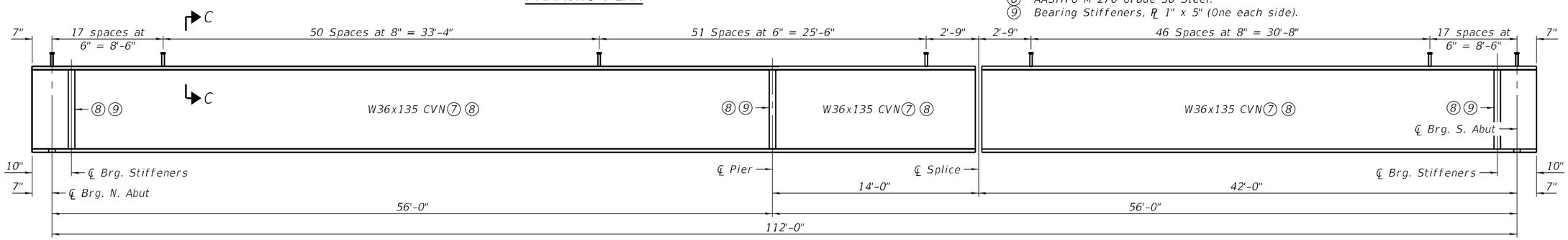

BEAM ELEVATION

(16 Required)

FILE NAME: H:\P\221053 - D9 Various Various PTB 199-038\221053.017-I-57 over Marcum\Microstation\0280090_0091-78884-026-Framing Plan.dgn

OATES ASSOCIATES
www.oatesassociates.com
ILLINOIS DESIGN FIRM LICENSE NO.: 184.001115

USER NAME =	DESIGNED - KP	REVISED -	
	CHECKED - KBC	REVISED -	
PLOT SCALE =	DRAWN - KP	REVISED -	
PLOT DATE = 12/13/2024	CHECKED - KBC	REVISED -	

STATE OF ILLINOIS
DEPARTMENT OF TRANSPORTATION

FRAMING PLAN
STRUCTURE NO. 028-0090 (S.B.) & 028-0091 (N.B.)

SHEET 26 OF 41 SHEETS

F.A.I. RTE.	SECTION	COUNTY	TOTAL SHEETS	SHEET NO.
57	(28-2)B-2	FRANKLIN	598	366

CONTRACT NO. 78884

ILLINOIS | FED. AID PROJECT

INTERIOR GIRDER MOMENT TABLE			
		0.4 Sp. 1 or 0.6 Sp. 2	Pier
I_s	(in^4)	7,800	7,800
$I_c(n)$	(in^4)	22,630	22,630
$I_c(3n)$	(in^4)	17,458	17,458
$I_c(cr)$	(in^4)	——	11,329
S_s	(in^3)	439	439
$S_c(n)$	(in^3)	663	663
$S_c(3n)$	(in^3)	609	609
$S_c(cr)$	(in^3)	——	518
S_x	(in^3)		
DC1	(k/')	1.068	1.068
M_{DC1}	('k)	234.5	418.7
DC2	(k/')	0.19	0.19
M_{DC2}	('k)	41.7	74.5
DW	(k/')	0.416	0.416
M_{DW}	('k)	91.3	163.1
LLDF		0.709	0.709
M_{LL+IM}	('k)	688.9	680.8
f_l (Strength I)	(ksi)	——	——
$M_u + \frac{1}{3} f_l S_x$	('k)	1,687.8	——
$\phi_f M_n$	('k)	3,375.1	——
Service Stresses:			
f_s DC1	(ksi)	6.41	11.44
f_s DC2	(ksi)	0.82	1.47
f_s DW	(ksi)	1.80	3.21
f_s (LL+IM)	(ksi)	12.47	12.32
f_l (Service II)	(ksi)	——	——
$f_s + {}^{f_l}/_2$ (Service II)	(ksi)	25.24	32.14
Service II Resistance	(ksi)	47.50	47.50
Strength Stresses:			
f_s DC1	(ksi)	6.41	11.44
f_s DC2	(ksi)	0.82	1.73
f_s DW	(ksi)	1.80	3.78
f_s (LL+IM)	(ksi)	12.47	15.77
f_l (Strength I)	(ksi)	——	——
$f_s + {}^{f_l}/_3$ (Strength I)	(ksi)	——	49.73
$\phi_f F_n$	(ksi)	——	50.00
V_f	(k)	66.9	76.2

I_s, S_s : Non-composite moment of inertia and section modulus of the steel section used for computing f_s(Total-Strength I, and Service II) due to non-composite dead loads ($in.^4$ and $in.^3$).

$I_c(n)$, $S_c(n)$: Composite moment of inertia and section modulus of the steel and deck based upon the modular ratio, "n", used for computing f_s(Total-Strength I, and Service II) in uncracked sections due to short-term composite live loads ($in.^4$ and $in.^3$).

$I_c(3n)$, $S_c(3n)$: Composite moment of inertia and section modulus of the steel and deck based upon 3 times the modular ratio, "3n", used for computing f_s(Total-Strength I, and Service II) in uncracked sections, due to long-term composite (superimposed) dead loads ($in.^4$ and $in.^3$).

$I_c(cr)$, $S_c(cr)$: Composite moment of inertia and section modulus of the steel and longitudinal deck reinforcement, used for computing f_s (Total-Strength I and Service II) in cracked sections, due to both short-term composite live loads and long-term composite (superimposed) dead loads ($in.^4$ and $in.^3$).

S_x : Section modulus about the major axis of a section to the controlling flange, tension or compression, taken as yield moment with respect to the controlling flange over the yield strength of the controlling flange ($in.^3$).

DC1: Un-factored non-composite dead load (kips/ft.).

M_{DC1} : Un-factored moment due to non-composite dead load (kip-ft.).

DC2: Un-factored long-term composite (superimposed excluding future wearing surface) dead load (kips/ft.).

M_{DC2} : Un-factored moment due to long-term composite (superimposed excluding future wearing surface) dead load (kip-ft.).

DW: Un-factored long-term composite (superimposed future wearing surface only) dead load (kips/ft.).

M_{DW} : Un-factored moment due to long-term composite (superimposed future wearing surface only) dead load (kip-ft.).

LLDF: Live Load Distribution Factor for moment and shear computed according to Article 4.6.2.2 and further IDOT provisions.

M_{LL+IM}: Un-factored live load moment plus dynamic load allowance (impact) (kip-ft.).

M_u : Strength I load combination of factored design moments (kip-ft.). $1.25 (M_{DC1} + M_{DC2}) + 1.5 M_{DW} + 1.75 M_{LL+IM}$

f_l : Factored calculated flange lateral bending stress as calculated using Article 6.10.1.6 and as further simplified by IDOT provisions (ksi).

$\phi_f M_n$: Factored nominal flexural resistance of the section determined as specified in Article 6.10.7.1 or A6 as applicable (kip-ft.).

f_s DC1: Un-factored stress at edge of flange for controlling steel flange due to vertical non-composite dead loads as calculated below (ksi).
M_{DC1} / S_s

f_s DC2: Un-factored stress at edge of flange for controlling steel flange due to vertical composite dead loads as calculated below (ksi).
$M_{DC2} / S_c(3n)$ or $M_{DC2} / S_c(cr)$ as applicable.

f_s DW: Un-factored stress at edge of flange for controlling steel flange due to vertical composite future wearing surface loads as calculated below (ksi).
$M_{DW} / S_c(3n)$ or $M_{DW} / S_c(cr)$ as applicable.

f_s (LL + IM): Un-factored stress at edge of flange for controlling steel flange due to vertical composite live load plus impact loads as calculated below (ksi).
$M_{LL+IM} / S_c(n)$ or $M_{LL+IM} / S_c(cr)$ as applicable.

$f_s + f_l/2$ (Service II): Sum of stresses as computed below (ksi).
f_s DC1 + f_s DC2 + f_s DW + 1.3 f_s (LL + IM) + $f_l/2$

Service II Resistance: Composite ($0.95R_hF_{yf}$) or noncomposite ($0.80R_hF_{yf}$) stress capacity according to Article 6.10.4.2 (ksi).

$f_s + f_l/3$ (Strength I): Sum of stresses as computed below on non-compact sections (ksi).
1.25 (f_s DC1 + f_s DC2) + 1.5 f_s DW + 1.75 f_s (LL + IM) + $f_l/3$

$\phi_f F_n$: Factored nominal flexural resistance of the section as specified in Article 6.10.7.2 or 6.10.8 as applicable (ksi).

V_f : Maximum factored shear range in span computed according to Article 6.10.10.

OCF: Obtuse Correction Factor according to Article 4.6.2.2.3c or as further simplified by IDOT provisions.

R_{DC1} : Un-factored reaction due to non-composite dead load (kip).

R_{DC2} : Un-factored reaction due to long-term composite (superimposed excluding future wearing surface) dead load (kip).

R_{DW} : Un-factored reaction due to long-term composite (superimposed future wearing surface only) dead load (kip).

R_{LL} : Un-factored live load reaction (kip).

R_{IM} : Un-factored dynamic load allowance (impact) (kip).

R_{Total} (Strength I)(Impact): Strength I load combination of factored design reactions (kip).
$1.25 (R_{DC1} + R_{DC2}) + 1.5R_{DW} + 1.75 (R_{LL} + R_{IM})$

R_{Total} (Strength I)(No Impact): Strength I load combination of factored design reactions, not including dynamic load allowance (Impact) (kip).
$1.25 (R_{DC1} + R_{DC2}) + 1.5R_{DW} + 1.75 (R_{LL})$

Note:
M_{LL} and R_{LL} include the effects of centrifugal force and superelevation.

GIRDER REACTION TABLE			
		Abut.	Pier
LLDF		0.884	0.884
OCF		1.126	1.126
R_{DC1}	(k)	22.4	74.8
R_{DC2}	(k)	4.0	13.3
R_{DW}	(k)	8.7	29.1
R_{LL}	(k)	72.7	134.2
R_{IM}	(k)	18.8	29.6
R_{Total} (Strength I)(Impact)	(k)	206.2	440.4
R_{Total} (Strength I)(No Impact)	(k)	173.3	388.6

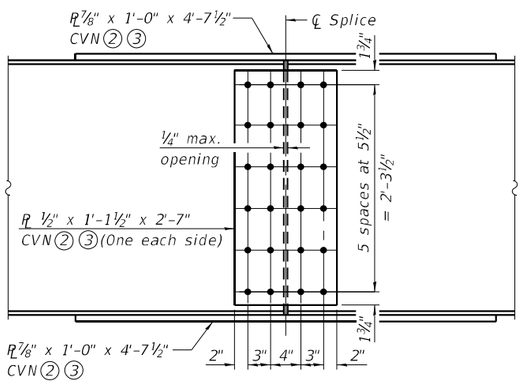

ELEVATION

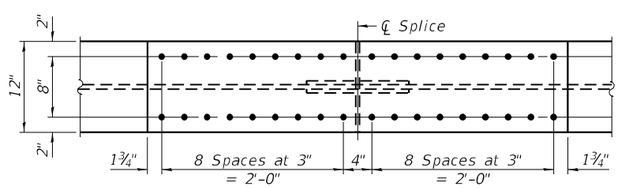

TOP AND BOTTOM PLAN

SPLICE DETAIL

(32 Required)

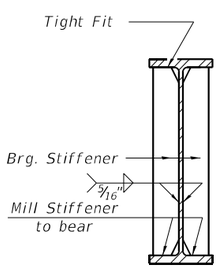

SECTION AT ABUTMENT

BEARING STIFFENER DETAILS

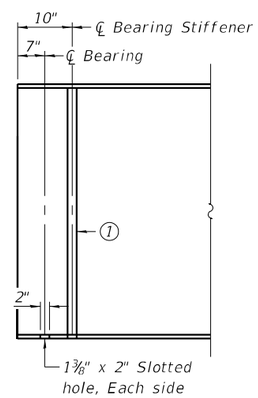

TYPICAL END OF BEAM ELEVATION

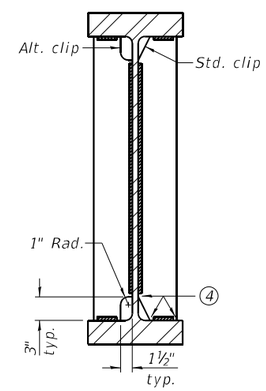

WELD LIMITS & CLIP DETAILS

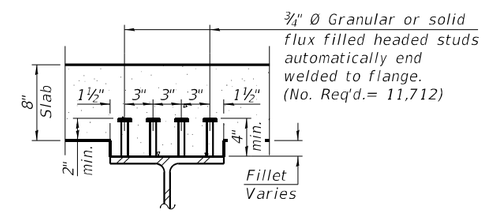

SECTION C-C

Notes:
1. Bearing Stiffeners, PL 1" x 5" (One each side).
2. AASHTO M 270 Grade 50 Steel.
3. Load carrying components designated "CVN" shall conform to the Charpy-V-Notch Impact Energy Requirement, Zone 2.
4. Stop welds 1/4" (±1/8") from edges as shown, typical.
5. For fabrication only.

TOP OF BEAM ELEVATIONS 5

	Beam 1	Beam 2	Beam 3	Beam 4	Beam 5	Beam 6	Beam 7	Beam 8	Beam 9	Beam 10	Beam 11	Beam 12	Beam 13	Beam 14	Beam 15	Beam 16
℄ Brg. N. Abut.	421.87	422.03	422.16	422.13	421.97	421.78	421.58	421.38	421.37	421.53	421.70	421.86	421.99	421.98	421.82	421.62
℄ Pier 1	421.63	421.79	421.92	421.89	421.73	421.53	421.34	421.14	421.13	421.29	421.45	421.62	421.74	421.74	421.58	421.38
℄ Splice	421.57	421.73	421.86	421.83	421.67	421.47	421.28	421.08	421.07	421.23	421.39	421.56	421.68	421.68	421.52	421.32
℄ Brg. S. Abut.	421.48	421.64	421.77	421.74	421.58	421.38	421.19	420.99	420.98	421.14	421.30	421.47	421.60	421.60	421.44	421.25

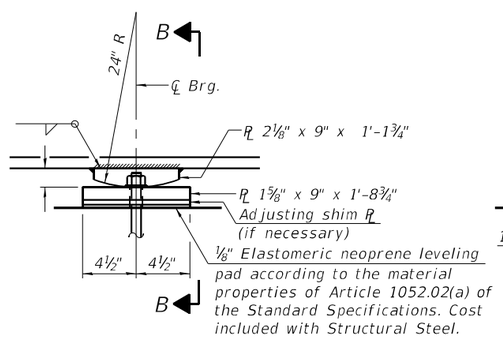

ELEVATION AT PIER

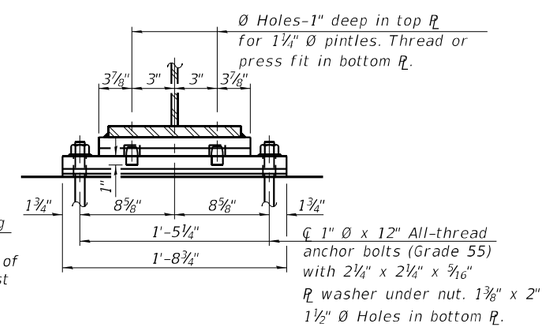

SECTION B-B

FIXED BEARING

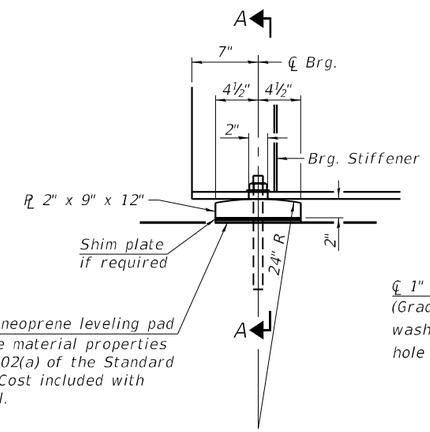

ELEVATION AT ABUTMENT

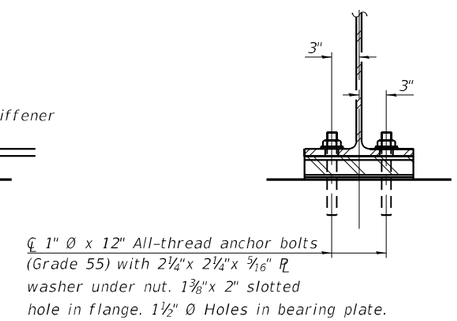

SECTION A-A

FIXED BEARING

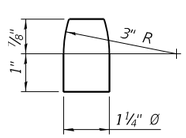

PINTLE

Notes:

1. Anchor bolts and side retainers at all supports shall be installed as each member is erected unless an equivalent temporary means of lateral restraint is used.
2. All (embedded and separate) bearing plates, anchor bolts, nuts, washers and pintles shall be galvanized according to AASHTO M111 or M232 as applicable.
3. The anchor bolt sizes and grades shown constitute a calculated seismic structural fuse. Substitution of higher diameter and/or grade anchor bolts will not be allowed.
4. Two ⅛" adjusting shims shall be provided for each bearing in addition to all other plates or shims and placed as shown on bearing details.
5. The structural steel plates of the bearing assemblies shall conform to the requirements of AASHTO M 270 Grade 50.

BEARING SHIM PLATES

	Beam 3	Beam 13
℄ Brg. N. Abut.	¼"	⅛"
℄ Brg. Pier	⅜"	⅛"
℄ Brg. S. Abut.	¼"	⅛"

BILL OF MATERIAL

Item	Unit	Total
Anchor Bolts, 1"	Each	96

FILE NAME: H:\PL221053 - D9 Various Various PTB 199-038\221053.017-I-57 over Marcum\Microstation\0280090_0091-78884-028-Bearing Details.dgn

OATES ASSOCIATES
www.oatesassociates.com
ILLINOIS DESIGN FIRM LICENSE NO.: 184.001115

USER NAME =	DESIGNED - KP	REVISED -	
	CHECKED - KBC	REVISED -	
PLOT SCALE =	DRAWN - KBC	REVISED -	
PLOT DATE = 12/13/2024	CHECKED - KP	REVISED -	

STATE OF ILLINOIS
DEPARTMENT OF TRANSPORTATION

BEARING DETAILS
STRUCTURE NO. 028-0090 (S.B.) & 028-0091 (N.B.)
SHEET 28 OF 41 SHEETS

F.A.I. RTE.	SECTION	COUNTY	TOTAL SHEETS	SHEET NO.
57	(28-2)B-2	FRANKLIN	598	368
		CONTRACT NO. 78884		
		ILLINOIS	FED. AID PROJECT	

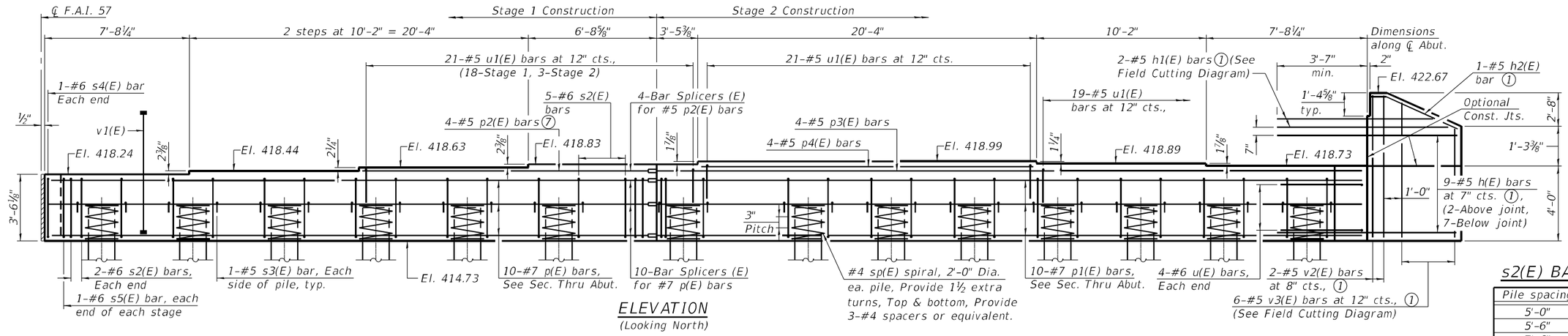

ELEVATION
(Looking North)

s2(E) BAR SPACING

Pile spacing	#6 s2(E) bars
5'-0"	4 at ±12"
5'-6"	5 at ±11"
7'-6"	7 at ±11"

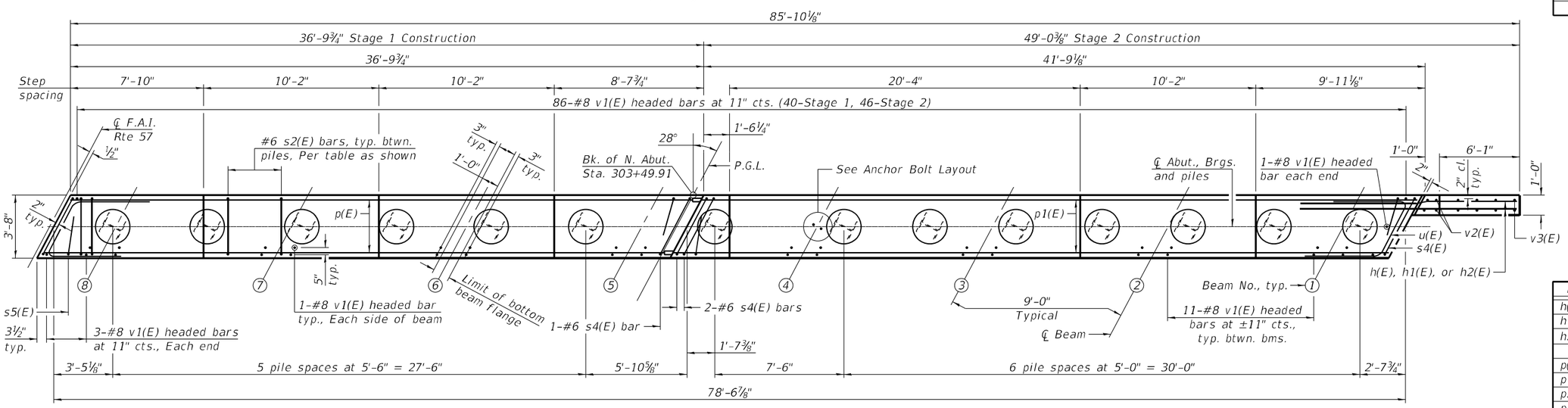

PLAN

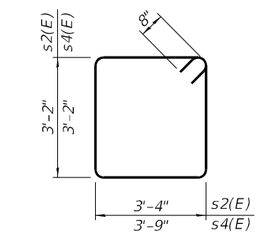

BAR s2(E) & s4(E)

BILL OF MATERIAL

	Bar	No.	Size	Length	Shape
	h(E)	18	#5	10'-8"	
	h1(E)	2	#5	18'-8"	
	h2(E)	2	#5	7'-4"	
	p(E)	10	#7	36'-5"	
	p1(E)	10	#7	41'-4"	
	p2(E)	4	#5	18'-5"	
	p3(E)	4	#5	41'-4"	
	p4(E)	4	#5	20'-0"	
	s2(E)	67	#6	14'-4"	
	s3(E)	28	#5	4'-4"	
	s4(E)	5	#6	15'-2"	
	s5(E)	4	#6	7'-8"	
②	sp(E)	14	#4	2'-0"	
	u(E)	8	#6	12'-3"	
	u1(E)	61	#5	7'-4"	
	v1(E)	187	#8	5'-7"	
	v2(E)	4	#5	7'-4"	
	v3(E)	6	#5	11'-8"	
	Structure Excavation		Cu. Yd.	58	
	Concrete Structures		Cu. Yd.	44.4	
	Reinforcement Bars, Epoxy Coated		Pound	8,060	
	Furnishing Steel Piles HP 14x89		Foot	559	
	Driving Piles		Foot	559	
	Test Pile Steel HP 14x89		Each	1	
	Pile Shoes		Each	14	

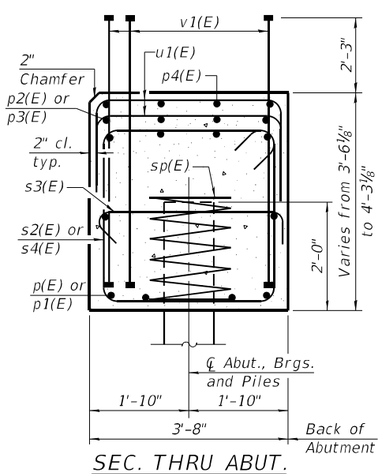

SEC. THRU ABUT.
Dimensions at right angles to abutment.

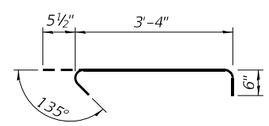

BAR s3(E)

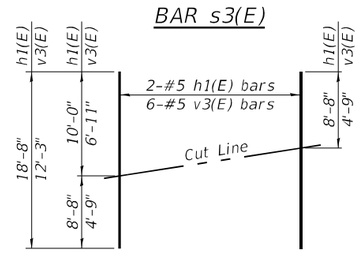

FIELD CUTTING DIAGRAM
Order h1(E) & v3(E) full length. Cut as shown and use remainder of bars in opposite face.

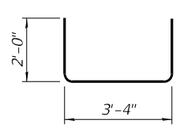

BAR u1(E)

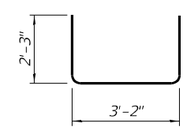

BAR s5(E)

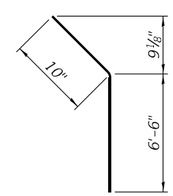

BAR h2(E)

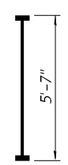

BAR v(E)
(Headed)
(374-#8 Bar Terminators)

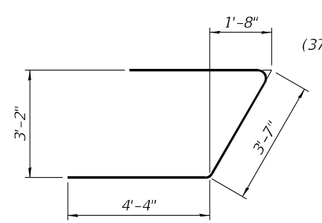

BAR u(E)

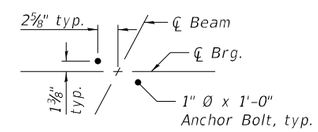

ANCHOR BOLT LAYOUT

PILE DATA
Type: HP14x89 with Pile Shoes
Nominal Required Bearing: 705 kips
Factored Resistance Available: 388 kips
Est. Length: 43 ft
No. Production Piles: 13
No. Test Piles: 1

Notes:
① Each face.
② Length is height of spiral.
③ Pour steps monolithically with cap.
④ Bar Terminators paid for separately. See Total Bill of Material.
⑤ For details of piles, see sheet 36 of 41.
⑥ For details of Bar Splicers, see sheet 37 of 41.
⑦ Cut p2(E) bars as necessary to fit.

FILE NAME: H:\P221053 - D9 Various Various PTB 199-038\221053.017-I-57 over Marcum\Microstation\0280090_0091-78884-029-Abutment Details - N.B. North Abutment.dgn

OATES ASSOCIATES
www.oatesassociates.com
ILLINOIS DESIGN FIRM LICENSE NO.: 184.001115

USER NAME =	DESIGNED - KBC	REVISED -	
	CHECKED - KBC	REVISED -	
PLOT SCALE =	DRAWN - KP	REVISED -	
PLOT DATE = 12/13/2024	CHECKED - KBC	REVISED -	

STATE OF ILLINOIS
DEPARTMENT OF TRANSPORTATION

NORTH ABUTMENT DETAILS
STRUCTURE NO. 028-0091 (N.B.)
SHEET 29 OF 41 SHEETS

F.A.I. RTE.	SECTION	COUNTY	TOTAL SHEETS	SHEET NO.
57	(28-2)B-2	FRANKLIN	598	369
		CONTRACT NO. 78884		
		ILLINOIS	FED. AID PROJECT	

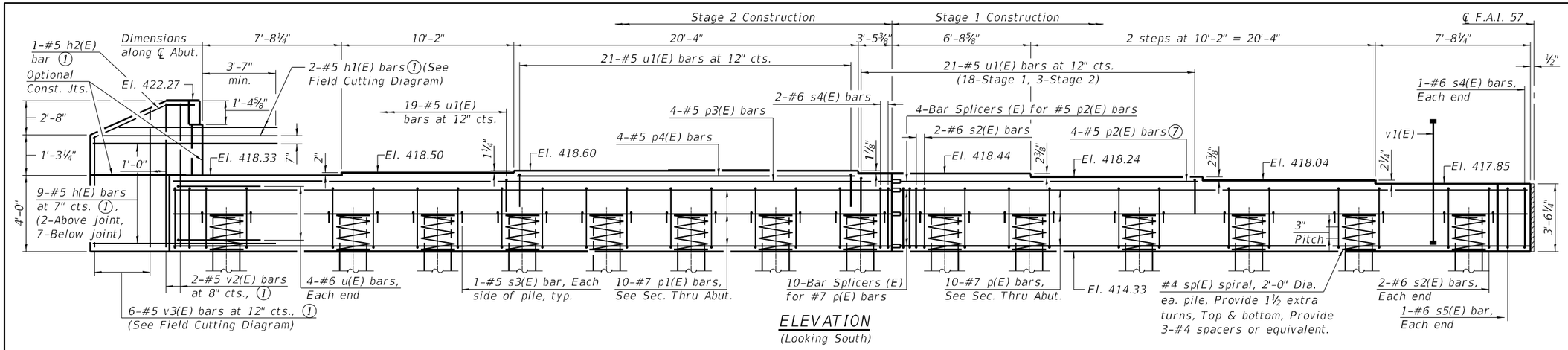

ELEVATION
(Looking South)

s2(E) BAR SPACING

Pile spacing	#6 s2(E) bars
5'-0"	4 at ±12"
6'-6"	6 at ±11"
7'-6"	7 at ±11"

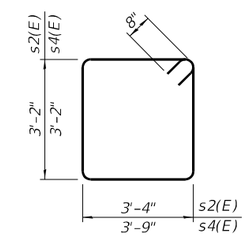

BAR s2(E) & s4(E)

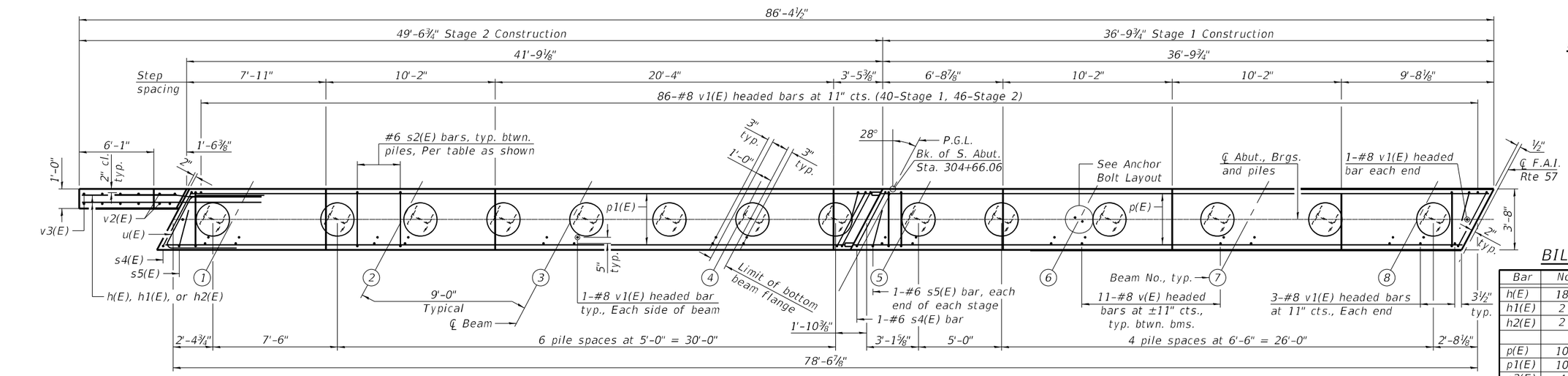

PLAN

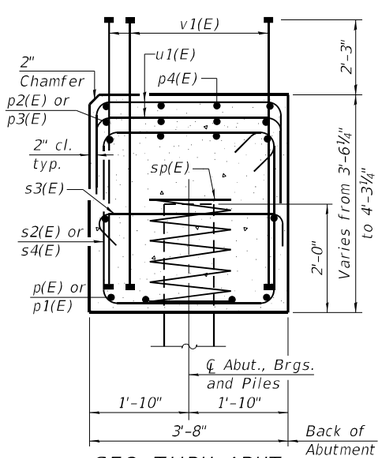

SEC. THRU ABUT.
Dimensions at right angles to abutment.

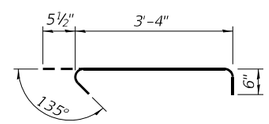

BAR s3(E)

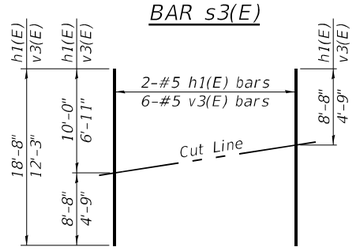

FIELD CUTTING DIAGRAM
Order h1(E) & v3(E) full length. Cut as shown and use remainder of bars in opposite face.

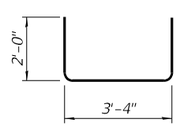

BAR u1(E)

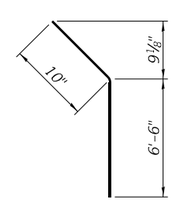

BAR h2(E)

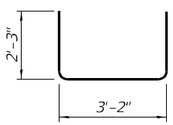

BAR s5(E)

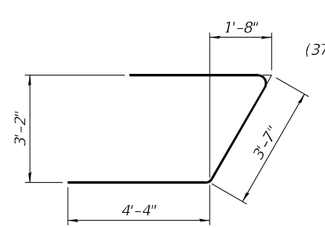

BAR u(E)

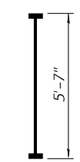

BAR v(E)
(Headed)
(374-#8 Bar Terminators)

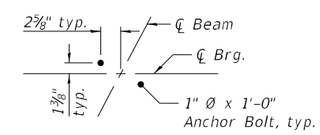

ANCHOR BOLT LAYOUT

PILE DATA
Type: HP14x89 with Pile Shoes
Nominal Required Bearing: 705 kips
Factored Resistance Available: 388 kips
Est. Length: 57 ft
No. Production Piles: 13
No. Test Piles: 1

Notes:
1. Each face.
2. Length is height of spiral.
3. Pour steps monolithically with cap.
4. Bar Terminators paid for separately. See Total Bill of Material.
5. For details of piles, see sheet 36 of 41.
6. For details of Bar Splicers, see sheet 37 of 41.
7. Cut p2(E) bars as necessary to fit.

BILL OF MATERIAL

	Bar	No.	Size	Length	Shape
	h(E)	18	#5	10'-8"	
	h1(E)	2	#5	18'-8"	
	h2(E)	2	#5	7'-4"	
	p(E)	10	#7	36'-5"	
	p1(E)	10	#7	41'-4"	
	p2(E)	4	#5	18'-5"	
	p3(E)	4	#5	41'-4"	
	p4(E)	4	#5	20'-0"	
	s2(E)	67	#6	14'-4"	
	s3(E)	28	#5	4'-4"	
	s4(E)	5	#6	15'-2"	
	s5(E)	4	#6	7'-8"	
2	sp(E)	14	#4	2'-0"	
	u(E)	8	#6	12'-3"	
	u1(E)	61	#5	7'-4"	
	v1(E)	187	#8	5'-7"	
	v2(E)	4	#5	7'-4"	
	v3(E)	6	#5	11'-8"	
	Structure Excavation	Cu. Yd.		58	
	Concrete Structures	Cu. Yd.		44.4	
	Reinforcement Bars, Epoxy Coated	Pound		8,060	
	Furnishing Steel Piles HP 14x89	Foot		741	
	Driving Piles	Foot		741	
	Test Pile Steel HP 14x89	Each		1	
	Pile Shoes	Each		14	

FILE NAME: H:\P\221053 - D9 Various Various PTB 199-038\221053.017-I-57 over Marcum\Microstation\0280090_0091-78884-030-Abutment Details - N.B. South Abutment.dgn

OATES ASSOCIATES
www.oatesassociates.com
ILLINOIS DESIGN FIRM LICENSE NO.: 184.001115

USER NAME =	DESIGNED - KBC	REVISED -	
	CHECKED - KBC	REVISED -	
PLOT SCALE =	DRAWN - KP	REVISED -	
PLOT DATE = 12/13/2024	CHECKED - KBC	REVISED -	

STATE OF ILLINOIS
DEPARTMENT OF TRANSPORTATION

SOUTH ABUTMENT DETAILS
STRUCTURE NO. 028-0091 (N.B.)

SHEET 30 OF 41 SHEETS

F.A.I. RTE.	SECTION	COUNTY	TOTAL SHEETS	SHEET NO.
57	(28-2)B-2	FRANKLIN	598	370
		CONTRACT NO. 78884		
		ILLINOIS	FED. AID PROJECT	

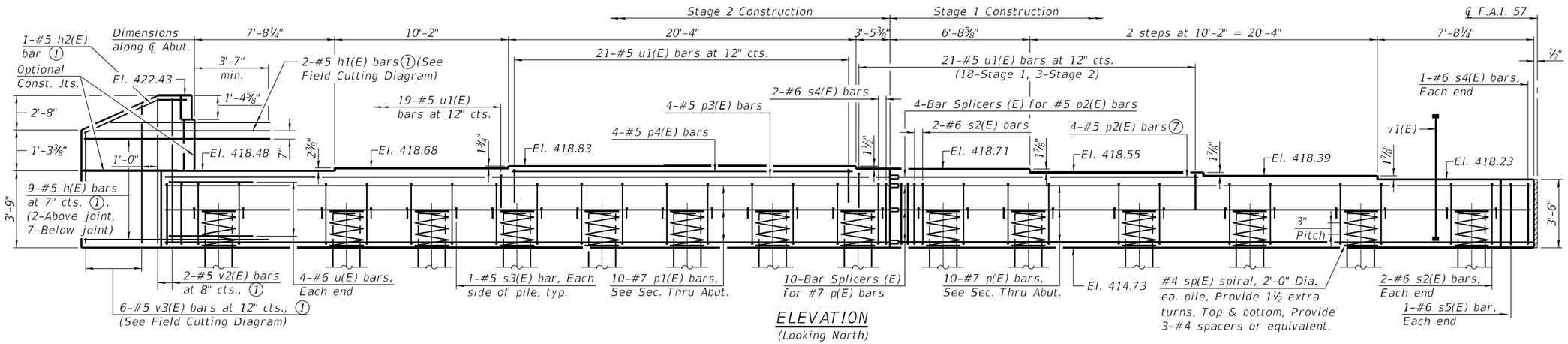

ELEVATION
(Looking North)

s2(E) BAR SPACING

Pile spacing	#6 s2(E) bars
5'-0"	4 at ±12"
6'-6"	6 at ±11"
7'-6"	7 at ±11"

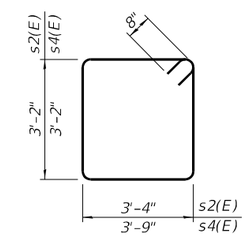

BAR s2(E) & s4(E)

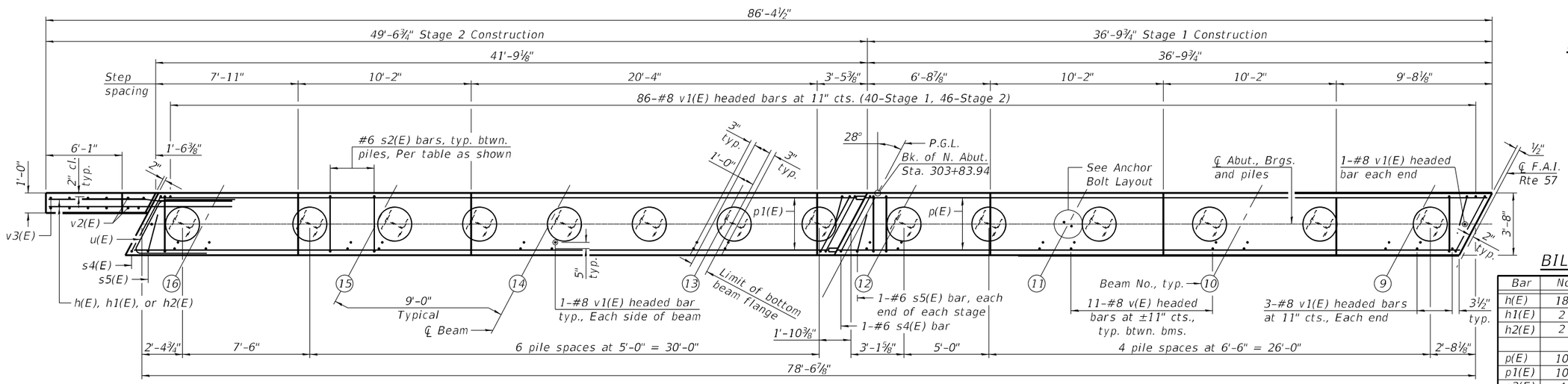

PLAN

BILL OF MATERIAL

	Bar	No.	Size	Length	Shape
	h(E)	18	#5	10'-8"	
	h1(E)	2	#5	18'-8"	
	h2(E)	2	#5	7'-4"	
	p(E)	10	#7	36'-5"	
	p1(E)	10	#7	41'-4"	
	p2(E)	4	#5	18'-5"	
	p3(E)	4	#5	41'-4"	
	p4(E)	4	#5	20'-0"	
	s2(E)	67	#6	14'-4"	
	s3(E)	28	#5	4'-4"	
	s4(E)	5	#6	15'-2"	
	s5(E)	4	#6	7'-8"	
②	sp(E)	14	#4	2'-0"	
	u(E)	8	#6	12'-3"	
	u1(E)	61	#5	7'-4"	
	v1(E)	187	#8	5'-7"	
	v2(E)	4	#5	7'-4"	
	v3(E)	6	#5	11'-8"	
	Structure Excavation	Cu. Yd.		58	
	Concrete Structures	Cu. Yd.		42.7	
	Reinforcement Bars, Epoxy Coated	Pound		8,060	
	Furnishing Steel Piles HP 14x89	Foot		572	
	Driving Piles	Foot		572	
	Test Pile Steel HP 14x89	Each		1	
	Pile Shoes	Each		14	

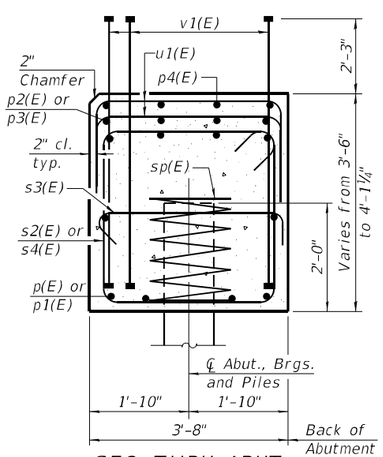

SEC. THRU ABUT.
Dimensions at right angles to abutment.

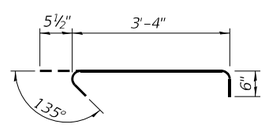

BAR s3(E)

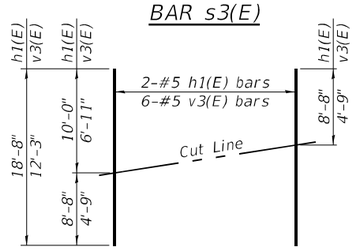

FIELD CUTTING DIAGRAM
Order h1(E) & v3(E) full length. Cut as shown and use remainder of bars in opposite face.

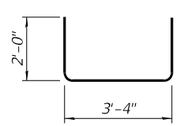

BAR u1(E)

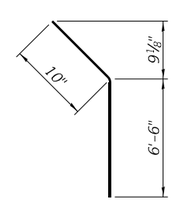

BAR h2(E)

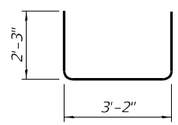

BAR s5(E)

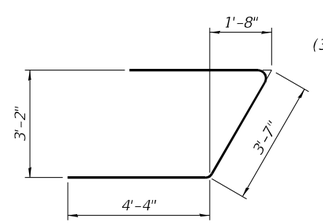

BAR u(E)

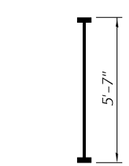

BAR v(E)
(Headed)
(374-#8 Bar Terminators)

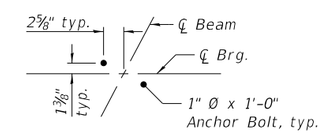

ANCHOR BOLT LAYOUT

PILE DATA
Type: HP14x89 with Pile Shoes
Nominal Required Bearing: 705 kips
Factored Resistance Available: 388 kips
Est. Length: 44 ft
No. Production Piles: 13
No. Test Piles: 1

Notes:
① Each face.
② Length is height of spiral.
③ Pour steps monolithically with cap.
④ Bar Terminators paid for separately. See Total Bill of Material.
⑤ For details of piles, see sheet 36 of 41.
⑥ For details of Bar Splicers, see sheet 37 of 41.
⑦ Cut p2(E) bars as necessary to fit.

OATES ASSOCIATES
www.oatesassociates.com
ILLINOIS DESIGN FIRM LICENSE NO.: 184.001115

USER NAME =	DESIGNED - KBC	REVISED -	
	CHECKED - KBC	REVISED -	
PLOT SCALE =	DRAWN - KP	REVISED -	
PLOT DATE = 12/13/2024	CHECKED - KBC	REVISED -	

STATE OF ILLINOIS
DEPARTMENT OF TRANSPORTATION

NORTH ABUTMENT DETAILS
STRUCTURE NO. 028-0090 (S.B.)

SHEET 31 OF 41 SHEETS

F.A.I. RTE.	SECTION	COUNTY	TOTAL SHEETS	SHEET NO.
57	(28-2)B-2	FRANKLIN	598	371
		CONTRACT NO. 78884		
		ILLINOIS	FED. AID PROJECT	

FILE NAME: H:\P\221053 - D9 Various Various PTB 199-038\221053.017-I-57 over Marcum\Microstation\0280090_0091-78884-031-Abutment Details - S.B. North Abutment.dgn

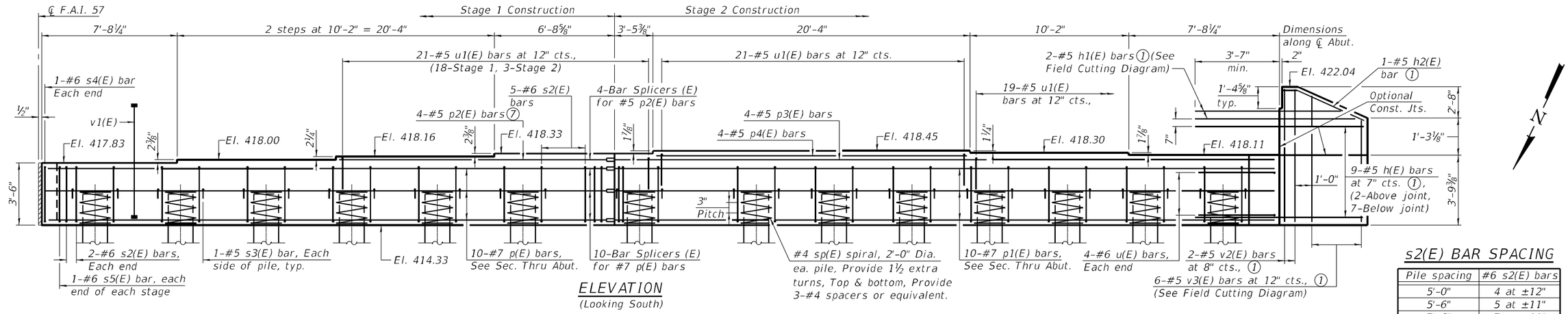

ELEVATION
(Looking South)

s2(E) BAR SPACING

Pile spacing	#6 s2(E) bars
5'-0"	4 at ±12"
5'-6"	5 at ±11"
7'-6"	7 at ±11"

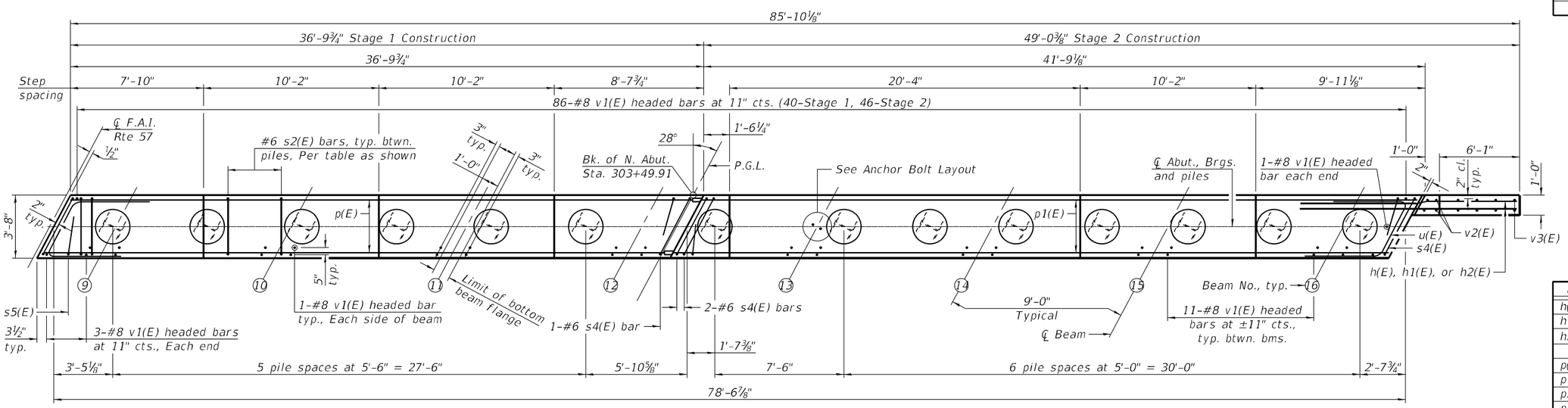

PLAN

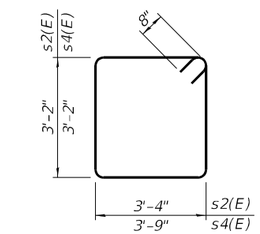

BAR s2(E) & s4(E)

BILL OF MATERIAL

	Bar	No.	Size	Length	Shape
	h(E)	18	#5	10'-8"	
	h1(E)	2	#5	18'-8"	
	h2(E)	2	#5	7'-4"	
	p(E)	10	#7	36'-5"	
	p1(E)	10	#7	41'-4"	
	p2(E)	4	#5	18'-5"	
	p3(E)	4	#5	41'-4"	
	p4(E)	4	#5	20'-0"	
	s2(E)	67	#6	14'-4"	
	s3(E)	28	#5	4'-4"	
	s4(E)	5	#6	15'-2"	
	s5(E)	4	#6	7'-8"	
②	sp(E)	14	#4	2'-0"	
	u(E)	8	#6	12'-3"	
	u1(E)	61	#5	7'-4"	
	v1(E)	187	#8	5'-7"	
	v2(E)	4	#5	7'-4"	
	v3(E)	6	#5	11'-8"	
	Structure Excavation		Cu. Yd.	58	
	Concrete Structures		Cu. Yd.	42.7	
	Reinforcement Bars, Epoxy Coated		Pound	8,060	
	Furnishing Steel Piles HP 14x89		Foot	702	
	Driving Piles		Foot	702	
	Test Pile Steel HP 14x89		Each	1	
	Pile Shoes		Each	14	

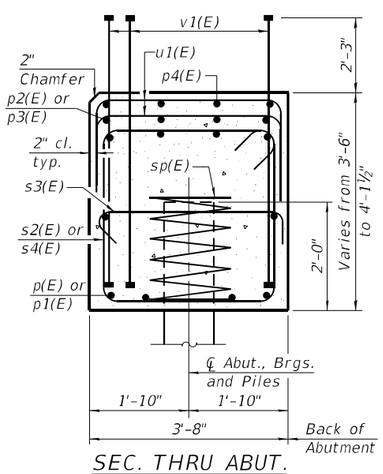

SEC. THRU ABUT.
Dimensions at right angles to abutment.

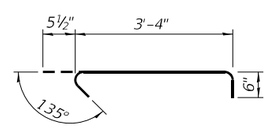

BAR s3(E)

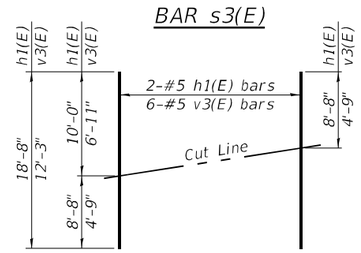

FIELD CUTTING DIAGRAM
Order h1(E) & v3(E) full length. Cut as shown and use remainder of bars in opposite face.

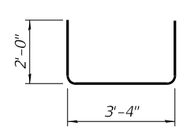

BAR u1(E)

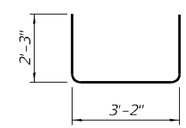

BAR s5(E)

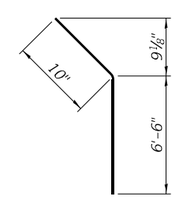

BAR h2(E)

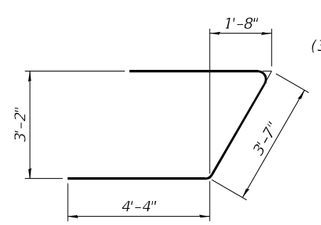

BAR u(E)

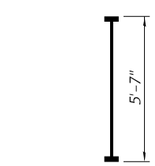

BAR v(E)
(Headed)
(374-#8 Bar Terminators)

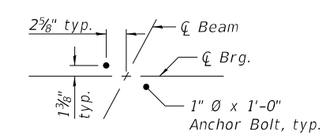

ANCHOR BOLT LAYOUT

PILE DATA
Type: HP14x89 with Pile Shoes
Nominal Required Bearing: 705 kips
Factored Resistance Available: 388 kips
Est. Length: 54 ft
No. Production Piles: 13
No. Test Piles: 1

Notes:
① Each face.
② Length is height of spiral.
③ Pour steps monolithically with cap.
④ Bar Terminators paid for separately. See Total Bill of Material.
⑤ For details of piles, see sheet 36 of 41.
⑥ For details of Bar Splicers, see sheet 37 of 41.
⑦ Cut p2(E) bars as necessary to fit.

FILE NAME: H:\P221053 - D9 Various Various PTB 199-038\221053.017-4-57 over Marcum\Microstation\0280090_0091-78884-032-Abutment Details - S.B. South Abutment.dgn

OATES ASSOCIATES
www.oatesassociates.com
ILLINOIS DESIGN FIRM LICENSE NO.: 184.001115

USER NAME =	DESIGNED - KBC	REVISED -	
	CHECKED - KBC	REVISED -	
PLOT SCALE =	DRAWN - KP	REVISED -	
PLOT DATE = 12/13/2024	CHECKED - KBC	REVISED -	

STATE OF ILLINOIS
DEPARTMENT OF TRANSPORTATION

SOUTH ABUTMENT DETAILS
STRUCTURE NO. 028-0090 (S.B.)

SHEET 32 OF 41 SHEETS

F.A.I. RTE.	SECTION	COUNTY	TOTAL SHEETS	SHEET NO.
57	(28-2)B-2	FRANKLIN	598	372

CONTRACT NO. 78884
ILLINOIS | FED. AID PROJECT

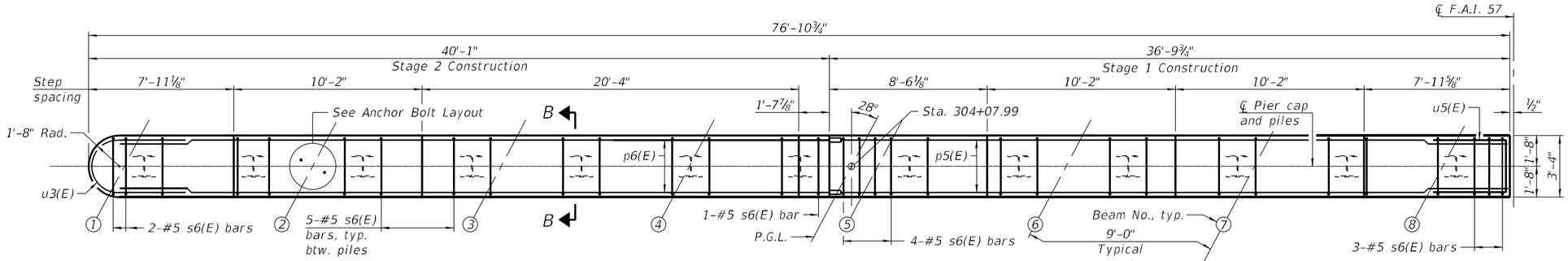

TOP PLAN

PILE DATA

Type: HP14x89 with Pile Shoes
Nominal Required Bearing: 705 kips
Factored Resistance Available: 388 kips
Est. Length: 55 ft
No. Production Piles: 12
No. Test Piles: 1

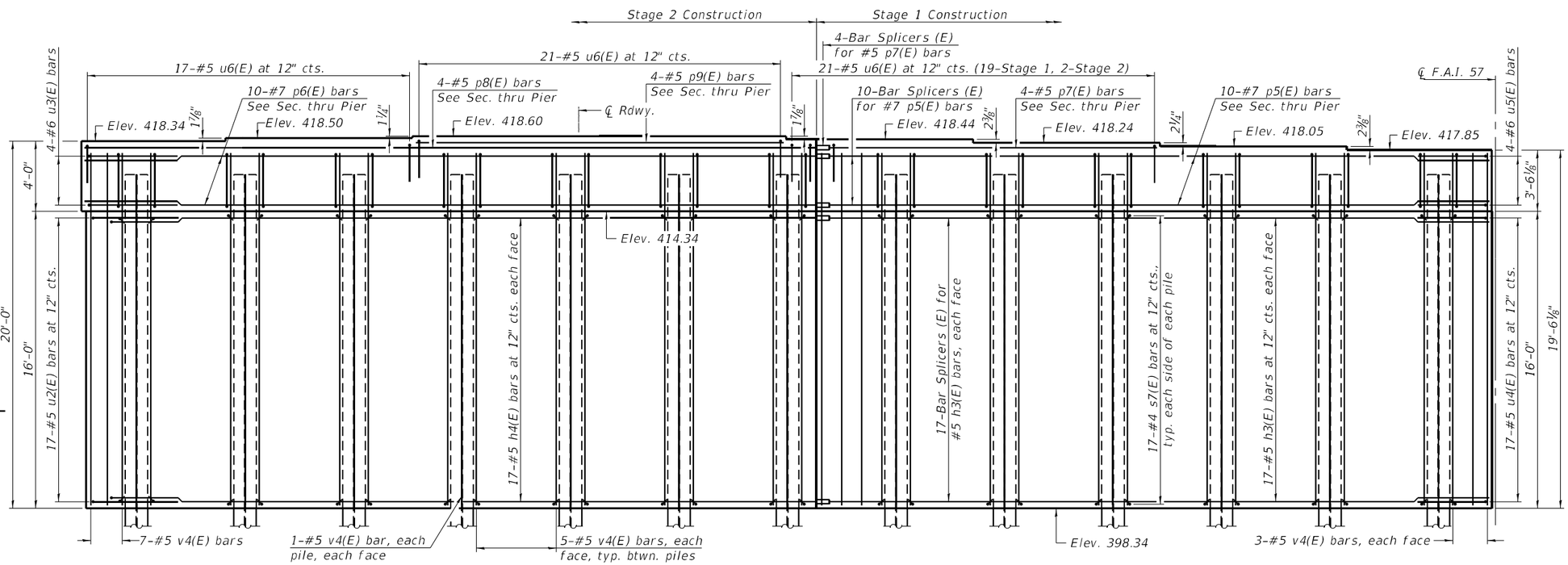

ELEVATION
(Looking South)

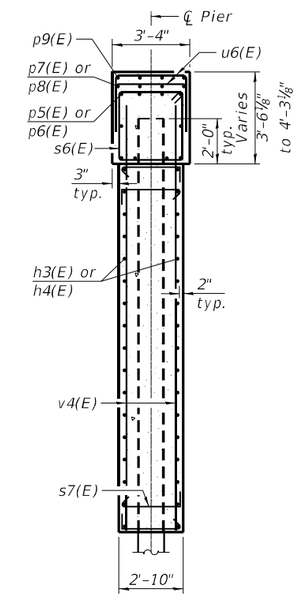

SECTION THRU PIER

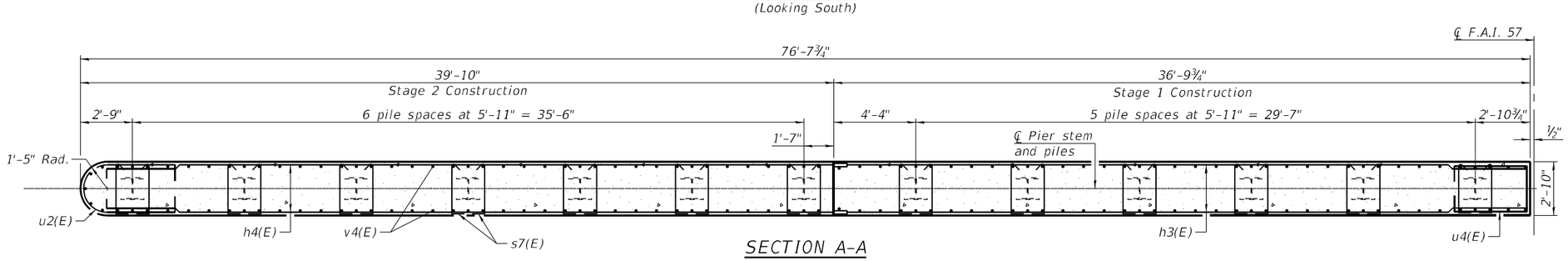

SECTION A-A

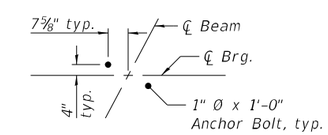

ANCHOR BOLT LAYOUT

Notes:
1. Pour steps monolithically with cap.
2. See sheet 35 of 41 for additional pier details and Bill of Material.
3. For details of piles, see sheet 36 of 41.
4. For bar splicer details, see sheet 37 of 41.
5. See sheet 35 of 41 for Section B-B.

FILE NAME: H:\P\221053 - D9 Various Various PTB 199-038\221053.017-I-57 over Marcum\Microstation\0280090_0091-78884-033-Pier Details - N.B.dgn

OATES ASSOCIATES www.oatesassociates.com ILLINOIS DESIGN FIRM LICENSE NO.: 184.001115	USER NAME =	DESIGNED - KBC	REVISED -	STATE OF ILLINOIS DEPARTMENT OF TRANSPORTATION	PIER STRUCTURE NO. 028-0091 (N.B.)
		CHECKED - KP	REVISED -		
	PLOT SCALE =	DRAWN - KP	REVISED -		
	PLOT DATE = 12/13/2024	CHECKED - KBC	REVISED -		SHEET 33 OF 41 SHEETS

F.A.I. RTE.	SECTION	COUNTY	TOTAL SHEETS	SHEET NO.
57	(28-2)B-2	FRANKLIN	598	373
		CONTRACT NO. 78884		
	ILLINOIS	FED. AID PROJECT		

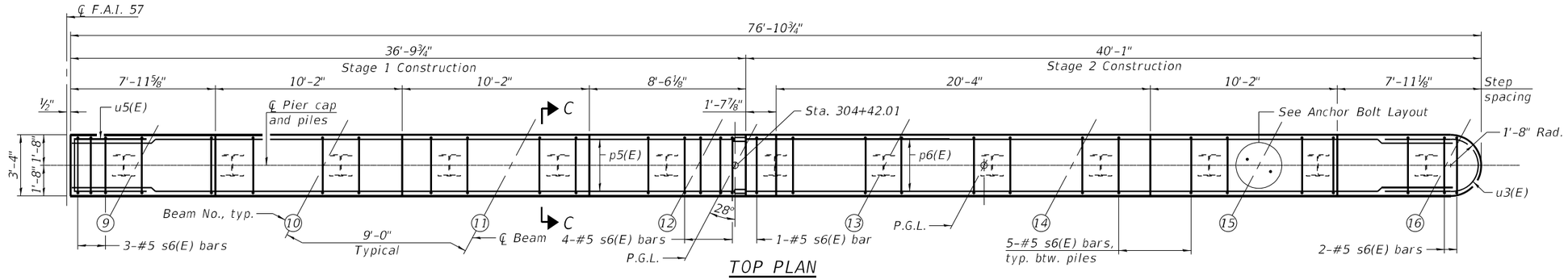

TOP PLAN

PILE DATA

Type: HP14x89 with Pile Shoes
Nominal Required Bearing: 705 kips
Factored Resistance Available: 388 kips
Est. Length: 54 ft
No. Production Piles: 12
No. Test Piles: 1

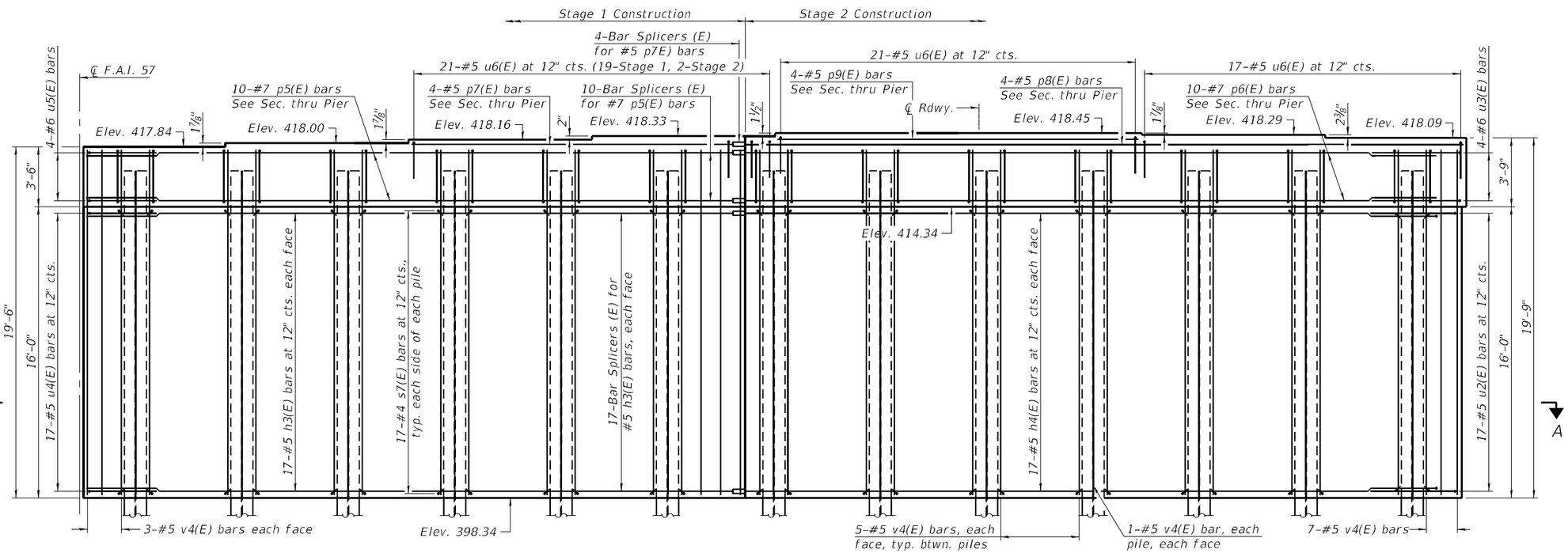

ELEVATION
(Looking South)

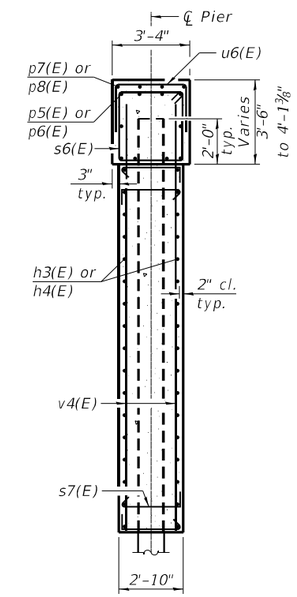

SECTION THRU PIER

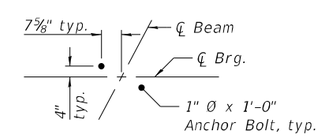

ANCHOR BOLT LAYOUT

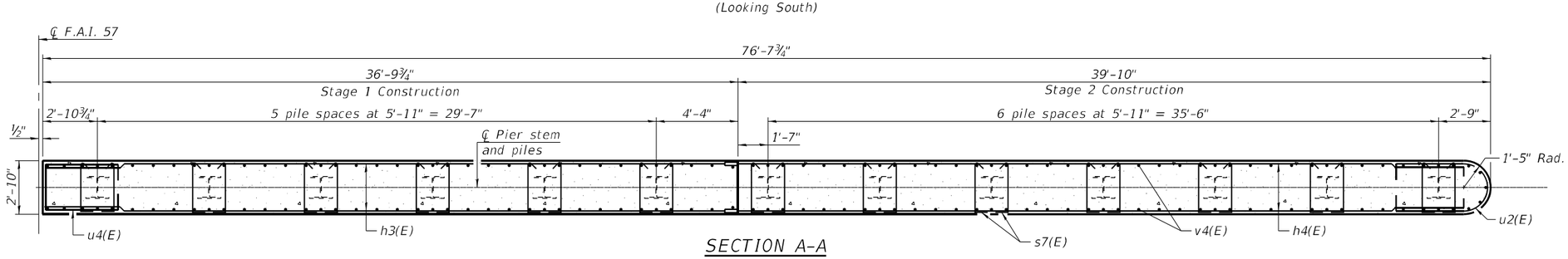

SECTION A-A

Notes:
1. Pour steps monolithically with cap.
2. See sheet 35 of 41 for additional pier details and Bill of Material.
3. For details of piles, see sheet 36 of 41.
4. For bar splicer details, see sheet 37 of 50.
5. See sheet 35 of 41 for Section C-C.

FILE NAME: H:\PB\221053 - D9 Various Various PTB 199-038\221053.017-I-57 over Marcum\Microstation\0280090_0091-78884-034-Pier Details - S.B.dgn

OATES ASSOCIATES www.oatesassociates.com ILLINOIS DESIGN FIRM LICENSE NO.: 184.001115	USER NAME =	DESIGNED - KBC	REVISED -	STATE OF ILLINOIS DEPARTMENT OF TRANSPORTATION	PIER STRUCTURE NO. 028-0090 (S.B.)	F.A.I. RTE.	SECTION	COUNTY	TOTAL SHEETS / SHEET NO.
		CHECKED - KP	REVISED -			57	(28-2)B-2	FRANKLIN	598 / 374
	PLOT SCALE =	DRAWN - KP	REVISED -			CONTRACT NO. 78884			
	PLOT DATE = 12/13/2024	CHECKED - KBC	REVISED -		SHEET 34 OF 41 SHEETS	ILLINOIS	FED. AID PROJECT		

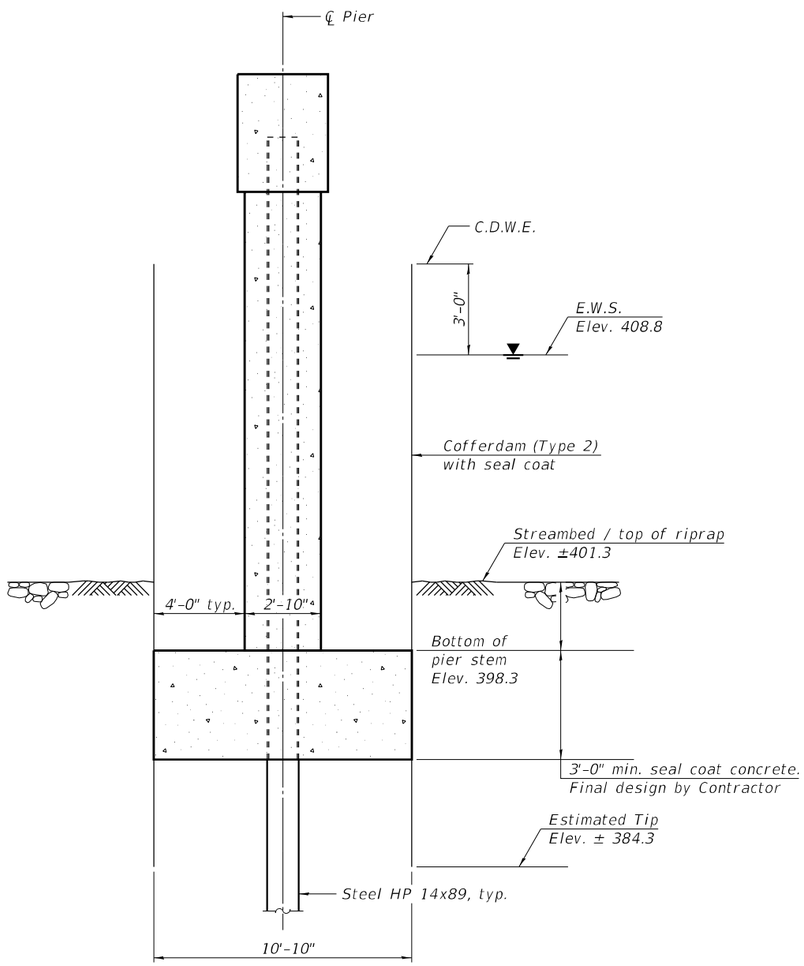

Cofferdam and Seal Coat

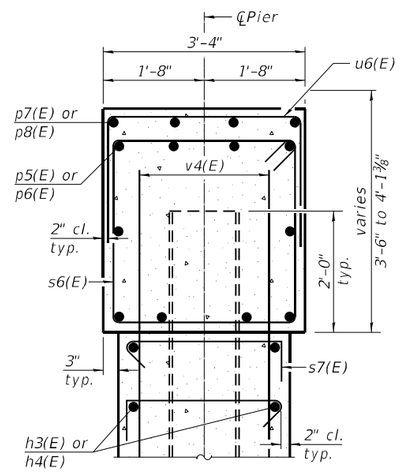

SECTION C-C

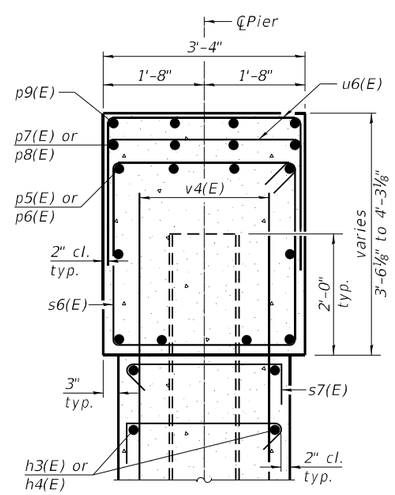

SECTION B-B

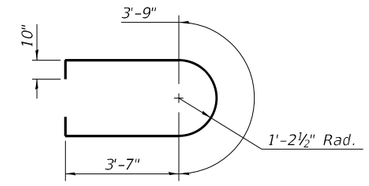

BAR u2(E)

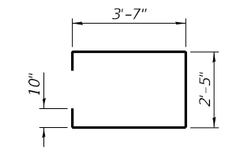

BAR u4(E)

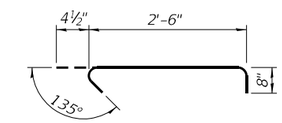

BAR s7(E)

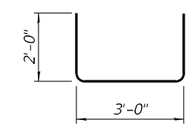

BAR u6(E)

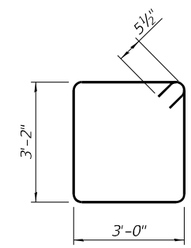

BAR s6(E)

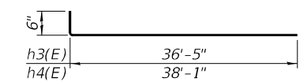

BAR h3(E) & h4(E)

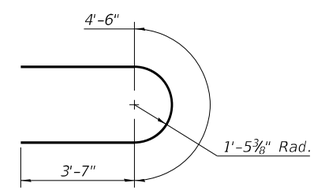

BAR u3(E)

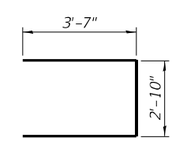

BAR u5(E)

NORTHBOUND & SOUTHBOUND PIERS - BILL OF MATERIAL

Bar	No.	Size	Length	Shape
h3(E)	68	#5	36'-11"	
h4(E)	68	#5	38'-7"	
p5(E)	20	#7	36'-5"	
p6(E)	20	#7	38'-1"	
p7(E)	8	#5	18'-4"	
p8(E)	8	#5	38'-1"	
p9(E)	8	#5	20'-0"	
s6(E)	130	#5	13'-3"	
s7(E)	884	#4	3'-7"	
u2(E)	34	#5	12'-7"	
u3(E)	8	#6	11'-8"	
u4(E)	34	#5	11'-3"	
u5(E)	8	#6	10'-0"	
u6(E)	118	#5	7'-0"	
v4(E)	318	#5	19'-2"	
Cofferdam Excavation			Cu. Yd.	390
Concrete Structures			Cu. Yd.	329.0
Reinforcement Bars, Epoxy Coated			Pound	21,280
Furnishing Steel Piles HP 14x89			Foot	1,308
Driving Piles			Foot	1,308
Test Pile Steel HP 14x89			Each	2
Pile Shoes			Each	26
Seal Coat Concrete			Cu. Yd.	194.8
Cofferdam (Type 2) (Location - 1)			Each	1
Cofferdam (Type 2) (Location - 2)			Each	1
Cofferdam (Type 2) (Location - 3)			Each	1

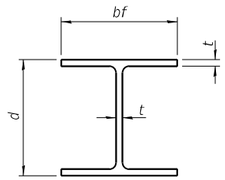

STEEL PILE TABLE

Designation	Depth d	Flange width bf	Web and Flange thickness t	Encasement diameter A
HP 14x117	14¼"	14⅞"	13/16"	30"
x102	14"	14¾"	11/16"	30"
x89	13⅞"	14¾"	⅝"	30"
x73	13⅝"	14⅝"	½"	30"
HP 12x84	12¼"	12¼"	11/16"	24"
x74	12⅛"	12¼"	⅝"	24"
x63	12"	12⅛"	½"	24"
x53	11¾"	12"	7/16"	24"
HP 10x57	10"	10¼"	9/16"	24"
x42	9¾"	10⅛"	7/16"	24"
HP 8x36	8"	8⅛"	7/16"	18"

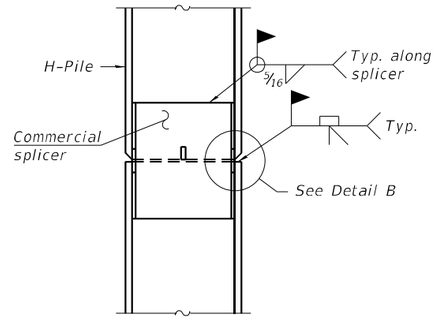

ELEVATION

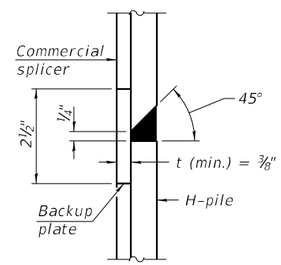

DETAIL "B"

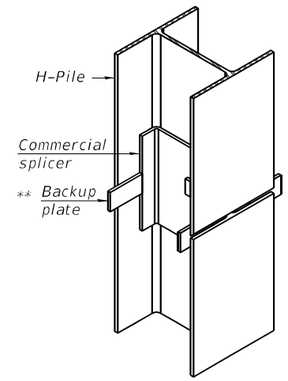

ISOMETRIC VIEW

WELDED COMMERCIAL SPLICE

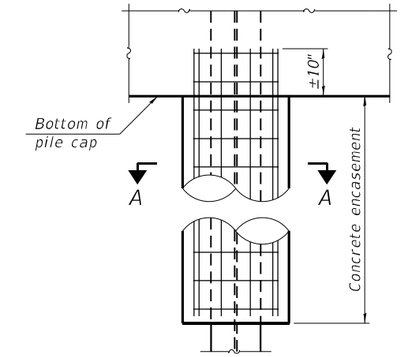

ELEVATION

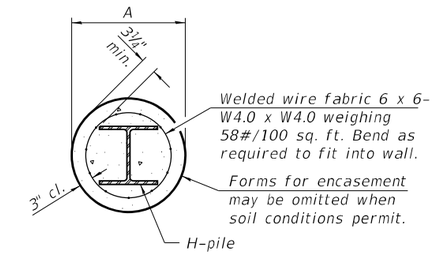

SECTION A-A

INDIVIDUAL PILE CONCRETE ENCASEMENT

(when specified)

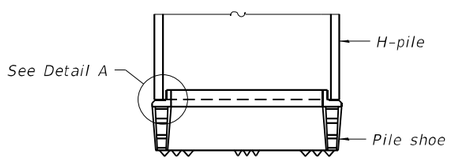

ELEVATION

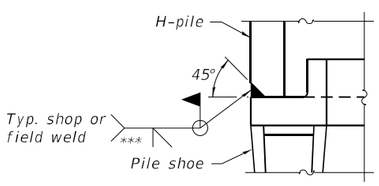

DETAIL A

SHOE ATTACHMENT

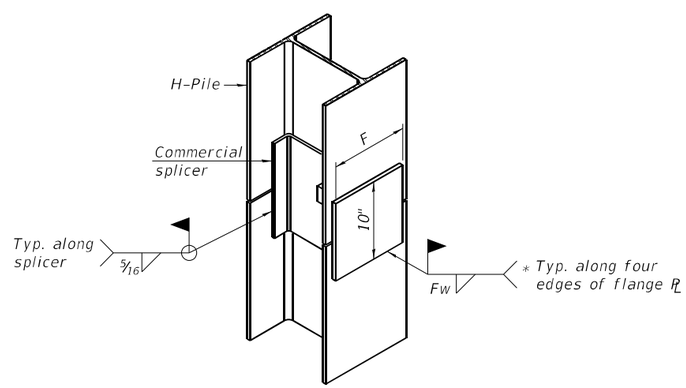

ISOMETRIC VIEW

WELDED COMMERCIAL SPLICE ALTERNATE

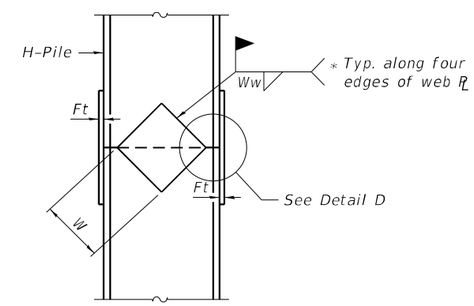

ELEVATION

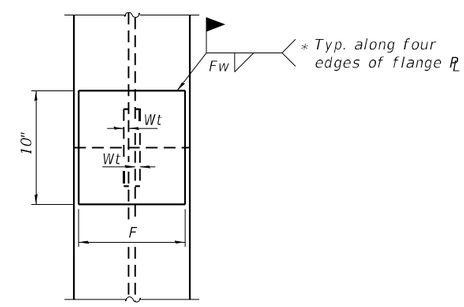

END VIEW

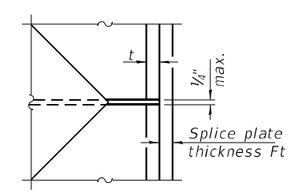

DETAIL D

Designation	F	Ft	Fw	W	Wt	Ww
HP 14x117	12½"	1¼"	⅞"	7¾"	⅝"	½"
x102	12½"	1"	¾"	7¾"	⅝"	½"
x89	12½"	⅞"	11/16"	7¾"	⅝"	½"
x73	12½"	¾"	9/16"	7¾"	⅝"	½"
HP 12x84	10"	1"	11/16"	6½"	⅝"	½"
x74	10"	⅞"	11/16"	6½"	⅝"	½"
x63	10"	¾"	½"	6½"	½"	⅜"
x53	10"	¾"	½"	6½"	½"	⅜"
HP 10x57	8"	⅞"	9/16"	5¼"	½"	⅜"
x42	8"	¾"	9/16"	5¼"	½"	⅜"
HP 8x36	6¾"	⅝"	7/16"	4"	½"	⅜"

WELDED PLATE FIELD SPLICE

Note:
The steel H-piles shall be according to AASHTO M270 Grade 50.

* Interrupt welds ¼" from end of web and/or each flange.

** Remove portions of backup plates that extend outside the flanges.

*** Weld size per pile shoe manufacturer (5/16" min.).

F-HP 10-27-2023

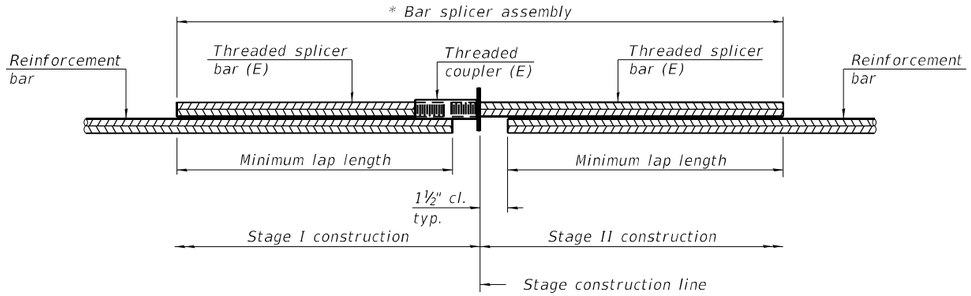

STANDARD BAR SPLICER ASSEMBLY PLAN

Only bar splicer assemblies as presented on the approved QPL list may be used.

Threaded splicer bar length = min. lap length + 1½" + thread length

* Epoxy not required on Bar Splicer Assembly components used in conjunction with black bars.

Location	Bar size	No. assemblies required	Minimum lap length
Abutment Cap	#7	40	5'-0"
Abutment Cap Steps	#5	16	3'-7"
Approach Footing	#5	160	3'-2"
Approach Slab Top	#5	160	3'-4"
Approach Slab Bottom	#9	212	4'-9"
Deck	#5	874	3'-6"
Integral Diaphragms, Back Face	#6	20	4'-0"
Integral Diaphragms, Front Face	#6	16	4'-0"
Pier Wall	#5	68	3'-7"
Pier Cap	#7	20	5'-0"
Pier Cap Steps	#5	8	3'-7"

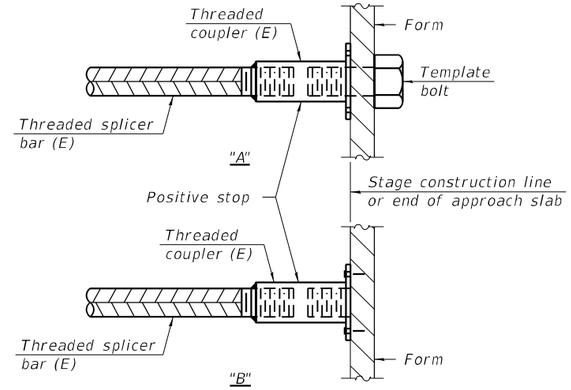

INSTALLATION AND SETTING METHODS

"A" : Set bar splicer assembly by means of a template bolt.
"B" : Set bar splicer assembly by nailing to wood forms or cementing to steel forms.
(E) : Indicates epoxy coating.

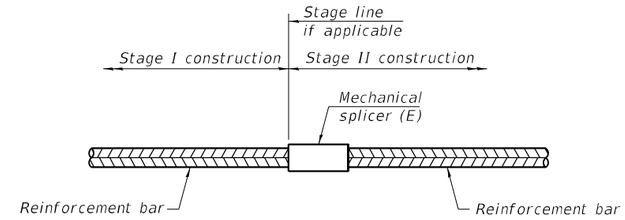

STANDARD MECHANICAL SPLICER

Location	Bar size	No. assemblies required

Notes:
Splicer bars shall be deformed with threaded ends and have a minimum 60 ksi yield strength.
All reinforcement shall be lapped and tied to the splicer bars.
Bar splicer assemblies shall be epoxy coated according to the requirements for reinforcement bars. See Section 508 of the Standard Specifications.
See approved list of bar splicer assemblies and mechanical splicers for alternatives.

BSD-1 5-15-2023

FILE NAME: H:\P221053 - D9 Various Various PTB 199-038:221053.017-57 over Marcum\Microstation\0280090_0091-78884-037-Bar Splicer Assembly.dgn

OATES ASSOCIATES
www.oatesassociates.com
ILLINOIS DESIGN FIRM LICENSE NO.: 184.001115

USER NAME =	DESIGNED - KP	REVISED -	
	CHECKED - KBC	REVISED -	
PLOT SCALE =	DRAWN - KP	REVISED -	
PLOT DATE = 12/13/2024	CHECKED - KBC	REVISED -	

STATE OF ILLINOIS
DEPARTMENT OF TRANSPORTATION

BAR SPLICER ASSEMBLY AND MECHANICAL SPLICER DETAILS
STRUCTURE NO. 028-0090 (S.B.) & 028-0091 (N.B.)

SHEET 37 OF 41 SHEETS

F.A.I. RTE.	SECTION	COUNTY	TOTAL SHEETS	SHEET NO.
57	(28-2)B-2	FRANKLIN	598	377

CONTRACT NO. 78884

ILLINOIS | FED. AID PROJECT

Illinois Department of Transportation
Division of Highways
District 9

SOIL BORING LOG

Date 4/10/19

ROUTE I-57 DESCRIPTION Bridge over Marcum Branch LOGGED BY L. Estel

SECTION (28-2)B-2 LOCATION Mile Post 75.1, SEC. 31, TWP. 5S, RNG. 3E, PM

COUNTY Franklin DRILLING METHOD Hollow stem auger (8" O.D., 3.25" I.D.) HAMMER TYPE Auto SPT 140 lbs

STRUCT. NO. 028-0011 & -0012
Station 304+39

BORING NO. 1-S
Station 303+35
Offset 28.0ft LT of CL NB Lanes
Ground Surface Elev. 421.7 ft

Surface Water Elev. 409.4 ft
Stream Bed Elev. 405.8 ft

Groundwater Elev.:
First Encounter 417.7 ft
Upon Completion ft
After Hrs. ft

Description	Elev.	DEPTH (ft)	BLOWS	UCS Qu (tsf)	MOIST (%)
Stiff Brown, Moist SILTY CLAY with ORGANICS	418.70		1 2 3	1 E	12
Soft Brown, Moist to Wet SILTY CLAY with GRAVEL	416.20	-5	WOH WOH WOH	.3 E	22
Stiff Brown, Moist SILTY CLAY	408.70	-10	WOH WOH 1 1 2 3 1 3 3	1 B 1.8 B 1.9 B	28 20 19
V. Stiff Brown, Moist SILTY CLAY	406.20	-15	1 4 4	2.9 B	16
Soft Grey, Moist SANDY LOAM Lab #20: 5% Fine GRAVEL, 49% SAND, 35% SILT, and 10% CLAY	403.70		1 2 2	.5 B	24
		-20	WOH WOH	.6	35
M. Stiff Grey, Moist to Wet SANDY LOAM with ORGANICS % Fines < #200: 40% (est.) *(continued)*	401.20		WOH	B	
Soft Grey, Damp to Moist SANDY LOAM Lab #21: 69% SAND, 17% SILT, and 15% CLAY	398.70		WOH 1 WOH	.5 B	22
V. Loose Grey and Brown, Fine SAND	396.20	-25	1 1 WOH	.3 B	24
Stiff Brown and Grey, Moist SILTY CLAY	393.70	-30	1 2 3	1.6 B	26
Stiff Brown and Grey with specks of dark Brown, Moist SILTY CLAY	391.20	-35	1 2 3	1.2 B	25
M. Stiff Grey, Damp to Moist SILTY LOAM % Fines < #200: 75% (est.), PI = 11 (est.), LL = 27 (est.) Based on historical data	388.70		WOH WOH WOH	.6 B	23
Stiff Grey, Moist SILTY LOAM with a CLAY layer % Fines < #200: 75% (est.), PI = 11 (est.), LL = 27 (est.) Based on historical data	386.20	-40	WOH 1 2	1.2 B	26
M. Stiff Grey, Moist SILTY CLAY LOAM			WOH WOH WOH WOH WOH	.8 B .8	23 19

The Unconfined Compressive Strength (UCS) Failure Mode is indicated by (B-Bulge, S-Shear, P-Penetrometer, E-Estimated)
Abbreviations W.O.H - Sampler Advanced By Weight of Hammer, W.O.P - Advanced by Weight of Pipe, B.S. - Before Seating
The SPT (N value) is the sum of the last two blow values in each sampling zone (AASHTO T206) BBS, from 137 (Rev. 8-99)

File Name: S:\MATERIALS GEOTECH\ROCK_LIB\TBORING LOGS USING GINT\STATE STRUCTURES\FRANKLIN\028-0011-12.GPJ Data Template
Latitude 38.0466868 Longitude -88.9247182 Datum NAD83 Job Number

Illinois Department of Transportation
Division of Highways
District 9

SOIL BORING LOG

Date 4/10/19

ROUTE I-57 DESCRIPTION Bridge over Marcum Branch LOGGED BY L. Estel

SECTION (28-2)B-2 LOCATION Mile Post 75.1, SEC. 31, TWP. 5S, RNG. 3E, PM

COUNTY Franklin DRILLING METHOD Hollow stem auger (8" O.D., 3.25" I.D.) HAMMER TYPE Auto SPT 140 lbs

STRUCT. NO. 028-0011 & -0012
Station 304+39

BORING NO. 1-S
Station 303+35
Offset 28.0ft LT of CL NB Lanes
Ground Surface Elev. 421.7 ft

Surface Water Elev. 409.4 ft
Stream Bed Elev. 405.8 ft

Groundwater Elev.:
First Encounter 417.7 ft
Upon Completion ft
After Hrs. ft

Description	Elev.	DEPTH (ft)	BLOWS	UCS Qu (tsf)	MOIST (%)
M. Stiff Grey, Moist SILTY CLAY LOAM *(continued)*	377.70		WOH	B	
Hard Grey, Damp SANDSTONE			100		16
Bottom of hole @ 54.5 ft Elevation referenced to BM 14, Chiseled Square at NW corner of SN 028-0012; EL. 421.91 To convert "N" values to "N60" multiply by 1.5 Borehole continued with rock coring.		-45 -50 -55 -60			

The Unconfined Compressive Strength (UCS) Failure Mode is indicated by (B-Bulge, S-Shear, P-Penetrometer, E-Estimated)
Abbreviations W.O.H - Sampler Advanced By Weight of Hammer, W.O.P - Advanced by Weight of Pipe, B.S. - Before Seating
The SPT (N value) is the sum of the last two blow values in each sampling zone (AASHTO T206) BBS, from 137 (Rev. 8-99)

File Name: S:\MATERIALS GEOTECH\ROCK_LIB\TBORING LOGS USING GINT\STATE STRUCTURES\FRANKLIN\028-0011-12.GPJ Data Template
Latitude 38.0466868 Longitude -88.9247182 Datum NAD83 Job Number

Illinois Department of Transportation
Division of Highways
District 9

ROCK CORE LOG

Date 4/10/19

ROUTE I-57 DESCRIPTION Bridge over Marcum Branch LOGGED BY L. Estel

SECTION (28-2)B-2 LOCATION Mile Post 75.1, SEC. 31, TWP. 5S, RNG. 3E, PM

COUNTY Franklin CORING METHOD Conventional rotary with water

STRUCT. NO. 028-0011 & -0012
Station 304+39

CORING BARREL TYPE & SIZE NV3 5FT NWJ
Core Diameter 2 in
Top of Rock Elev. 377.70 ft
Begin Core Elev. 377.20 ft

BORING NO. 1-S
Station 303+35
Offset 28.0ft LT of CL NB Lanes
Ground Surface Elev. 421.7 ft

Description	Elev.	DEPTH (ft)	CORE (#)	RECOVERY (%)	R.Q.D. (%)	CORE TIME (min/ft)	STRENGTH (tsf)
Hard Grey, Dry SANDSTONE with COAL seams		-45	1	90	33	3.2	173.2
Hard Grey, Dry SANDSTONE with a COAL layer and Grey CLAY SHALE bottom	367.20	-50	1	58	29	4.0	376.3
Bottom of hole @ 54.5 ft Elevation referenced to BM 14, Chiseled Square at NW corner of SN 028-0012; EL. 421.91		-55 -60					

Color pictures of the cores Yes, in file
Cores will be stored for examination until 5 Years after Construction
The "Strength" column represents the uniaxial compressive strength of the core sample (ASTM D-2938)
RQD is the ratio of the total length of sound core specimens >4" to total length of core run BBS, form 138 (Rev. 8-99)

ROCK CORE 028-0011-12.GPJ DISTSMPLT.GDT 7/12/19

FILE NAME: H:\PL221053 - D9 Various Various PTB 199-038:221053.017-I-57 over Marcum\Microstation\0280090_0091-78884-038-Soil Boring Log 1.dgn

OATES ASSOCIATES
www.oatesassociates.com
ILLINOIS DESIGN FIRM LICENSE NO.: 184.001115

USER NAME =	DESIGNED -	REVISED -
	CHECKED -	REVISED -
PLOT SCALE =	DRAWN -	REVISED -
PLOT DATE = 12/13/2024	CHECKED -	REVISED -

STATE OF ILLINOIS
DEPARTMENT OF TRANSPORTATION

SOIL BORING LOGS
STRUCTURE NO. 028-0090 (S.B.) & 028-0091 (N.B.)
SHEET 38 OF 41 SHEETS

F.A.I. RTE.	SECTION	COUNTY	TOTAL SHEETS	SHEET NO.
57	(28-2)B-2	FRANKLIN	598	378

CONTRACT NO. 78884
ILLINOIS FED. AID PROJECT

Illinois Department of Transportation
Division of Highways
District 8

SOIL BORING LOG

Date 4/11/19

ROUTE I-57 DESCRIPTION Bridge over Marcum Branch LOGGED BY L. Estel

SECTION (28-2)B-2 LOCATION Mile Post 75.1, SEC. 31, TWP. 5S, RNG. 3E, PM

COUNTY Franklin DRILLING METHOD Hollow stem auger (8" O.D., 3.25" I.D.) HAMMER TYPE Auto SPT 140 lbs

STRUCT. NO. 028-0011 & -0012
Station 304+39

BORING NO. 2-S
Station 305+43
Offset 25.0ft LT of CL SB Lanes
Ground Surface Elev. 421.4 ft

Surface Water Elev. 409.4 ft
Stream Bed Elev. 405.8 ft

Groundwater Elev.:
First Encounter 402.9 ft
Upon Completion ft
After Hrs. ft

Description	Elev.	DEPTH (ft)	BLOWS	UCS Qu (tsf)	MOIST (%)
Stiff Brown, Moist SILTY CLAY LOAM	418.90		1 2 3	1.5 B	21
Soft Brown, Moist SILTY CLAY LOAM	413.90	-5	WOH WOH 1 2	.4 B	20
			WOH WOH WOH	.25 B	21
M. Stiff Brown, Moist SILTY CLAY LOAM with rotten WOOD	411.40	-10	WOH 1 2	.75 B	18
M. Stiff Blue/Grey, Moist CLAY	408.90		1 2 3	.78 B	24
V. Stiff Blue/Grey, Moist CLAY	406.40	-15	1 2 3	3.7 B	19
M. Stiff Blue/Grey, Moist SILT	403.90		WOH 3 3	.78 B	22
V. Loose Blue/Grey, Damp to Wet SANDY LOAM Lab #25: 64% SAND, 28% SILT, and 8% CLAY	401.40	-20	WOH		
V. Loose Grey to Brown, Damp to Wet SANDY LOAM 64% SAND, 28% SILT, and 8% CLAY (double sample)	398.90		WOH WOH WOH WOH 1		21
M. Stiff Brown, Moist SANDY LOAM % Fines < #200: 40% (est.)	396.40	-25	1 2 4	.82 B	21
M. Stiff Brown and mottled Grey, Moist CLAY LOAM	393.90		1 1 2	.82 B	26
Stiff Brown and mottled Grey, Moist CLAY LOAM	391.40	-30	1 2 4	1.5 B	26
Stiff Brown, Moist CLAY	388.00		WOH 1 3	1.2 B	29
M. Stiff Grey, Moist SILTY CLAY	386.40	-35	WOH 1 2	.66 B	22
M. Stiff Grey, Moist SILTY LOAM % Fines < #200: 75% (est.), PI = 11 (est.), LL = 27 (est.) Based on historical data	383.90		WOH WOH WOH	.7 B	23
Stiff Grey, Moist SILTY LOAM % Fines < #200: 75% (est.), PI = 11 (est.), LL = 27 (est.) Based on historical data	381.40	-40	1 4 4	1 B	20

The Unconfined Compressive Strength (UCS) Failure Mode is indicated by (B-Bulge, S-Shear, P-Penetrometer, E-Estimated)
Abbreviations W.O.H - Sampler Advanced By Weight of Hammer, W.O.P - Advanced by Weight of Pipe, B.S. - Before Seating
The SPT (N value) is the sum of the last two blow values in each sampling zone (AASHTO T206) BBS, from 137 (Rev. 8-99)

File Name S:\MATERIALS GEOTECHNICAL UNIT\BORING LOGS USING GINT\STATE STRUCTURES\FRANKLIN\028-0011-12.GPJ Date Template DOTEMPLT.GDT Date Printed 7/12/19
Latitude 38.045040 Longitude -89.904211 Datum NAD83 Unit Number

Illinois Department of Transportation
Division of Highways
District 8

SOIL BORING LOG

Date 4/11/19

ROUTE I-57 DESCRIPTION Bridge over Marcum Branch LOGGED BY L. Estel

SECTION (28-2)B-2 LOCATION Mile Post 75.1, SEC. 31, TWP. 5S, RNG. 3E, PM

COUNTY Franklin DRILLING METHOD Hollow stem auger (8" O.D., 3.25" I.D.) HAMMER TYPE Auto SPT 140 lbs

STRUCT. NO. 028-0011 & -0012
Station 304+39

BORING NO. 2-S
Station 305+43
Offset 25.0ft LT of CL SB Lanes
Ground Surface Elev. 421.4 ft

Surface Water Elev. 409.4 ft
Stream Bed Elev. 405.8 ft

Groundwater Elev.:
First Encounter 402.9 ft
Upon Completion ft
After Hrs. ft

Description	Elev.	DEPTH (ft)	BLOWS	UCS Qu (tsf)	MOIST (%)
historical data					
Stiff Grey, Moist SILTY CLAY LOAM	376.40	-45	4 20	1.5	25
Stiff Gray, Damp weathered CLAY SHALE	375.90		25	S	
Hard dark Grey, Dry CLAYSHALE			100		
Bottom of hole @ 46 ft. 1 in.		-50			
Elevation referenced to BM 14, Chiseled Square at NW corner of SN 028-0012; EL. 421.91		-55			
To convert "N" values to "N60", multiply by 1.5		-60			

The Unconfined Compressive Strength (UCS) Failure Mode is indicated by (B-Bulge, S-Shear, P-Penetrometer, E-Estimated)
Abbreviations W.O.H - Sampler Advanced By Weight of Hammer, W.O.P - Advanced by Weight of Pipe, B.S. - Before Seating
The SPT (N value) is the sum of the last two blow values in each sampling zone (AASHTO T206) BBS, from 137 (Rev. 8-99)

File Name S:\MATERIALS GEOTECHNICAL UNIT\BORING LOGS USING GINT\STATE STRUCTURES\FRANKLIN\028-0011-12.GPJ Date Template DOTEMPLT.GDT Date Printed 7/12/19
Latitude 38.045040 Longitude -89.904211 Datum NAD83 Unit Number

STATE OF ILLINOIS
DEPARTMENT OF PUBLIC WORKS & BUILDINGS
DIVISION OF HIGHWAYS

57	28-2B	FRANKLIN	24	14

SHEET NO. 10
11 SHEETS

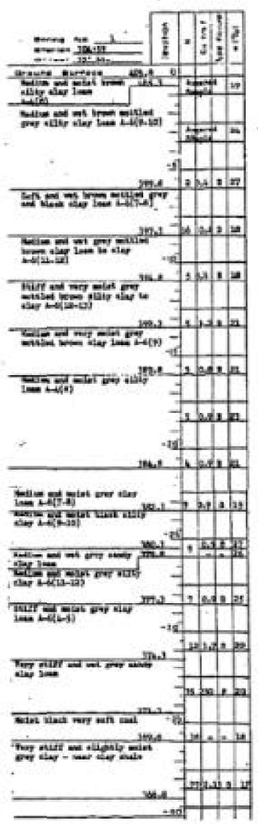

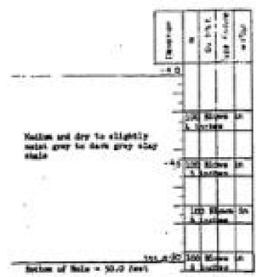

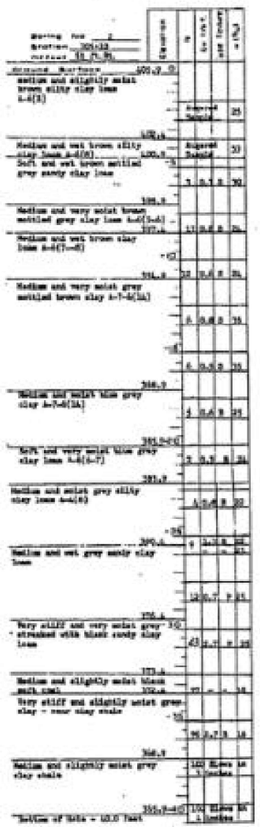

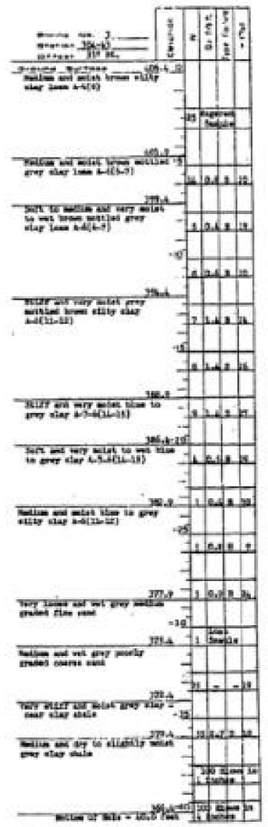

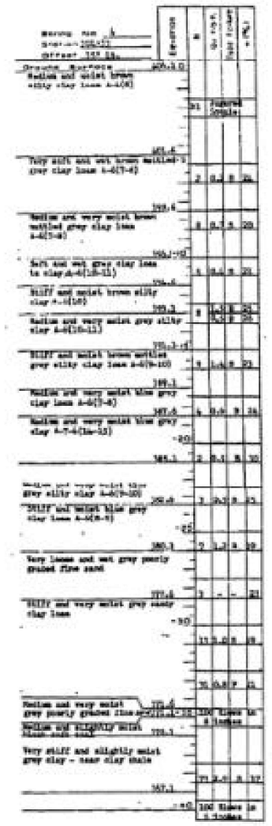

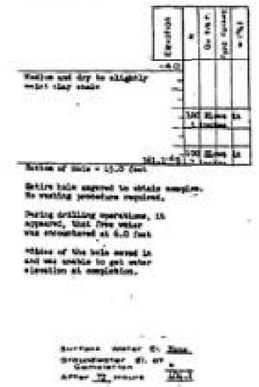

N= Standard Penetration Test Blows per foot to drive 2" O.D. Split Spoon Sampler with 140# hammer falling 30"
Qu= Unconfined Compressive Strength tsf
W= Water Content - percentage of oven dry weight %
Type Failure:
B= Bulge Failure
S= Shear Failure
P= Penetrometer value

DESIGNED
CHECKED
DRAWN
CHECKED

Nov. 10 19 61

BORING DATA
MARCUM BRANCH
F.A.I. RT. 57 SEC. 28-2B
FRANKLIN COUNTY
STA. 304+25

FILE NAME: H:\P221053 - D9 Various Various PTB 199-038\221053.017-I-57 over Marcum\Microstation\0280090_0091-78884-040-Soil Boring Log 3.dgn

OATES ASSOCIATES
www.oatesassociates.com
ILLINOIS DESIGN FIRM LICENSE NO.: 184.001115

USER NAME =	DESIGNED -	REVISED -
	CHECKED -	REVISED -
PLOT SCALE =	DRAWN -	REVISED -
PLOT DATE = 12/13/2024	CHECKED -	REVISED -

STATE OF ILLINOIS
DEPARTMENT OF TRANSPORTATION

SOIL BORING LOGS
STRUCTURE NO. 028-0090 (S.B.) & 028-0091 (N.B.)
SHEET 40 OF 41 SHEETS

F.A.I. RTE.	SECTION	COUNTY	TOTAL SHEETS	SHEET NO.
57	(28-2)B-2	FRANKLIN	598	380
		CONTRACT NO. 78884		
		ILLINOIS	FED. AID PROJECT	

STATE OF ILLINOIS
DEPARTMENT OF PUBLIC WORKS & BUILDINGS
DIVISION OF HIGHWAYS

F.A.I. 57	28-2B	FRANKLIN	22	15

SHEET NO. 11
11 SHEETS

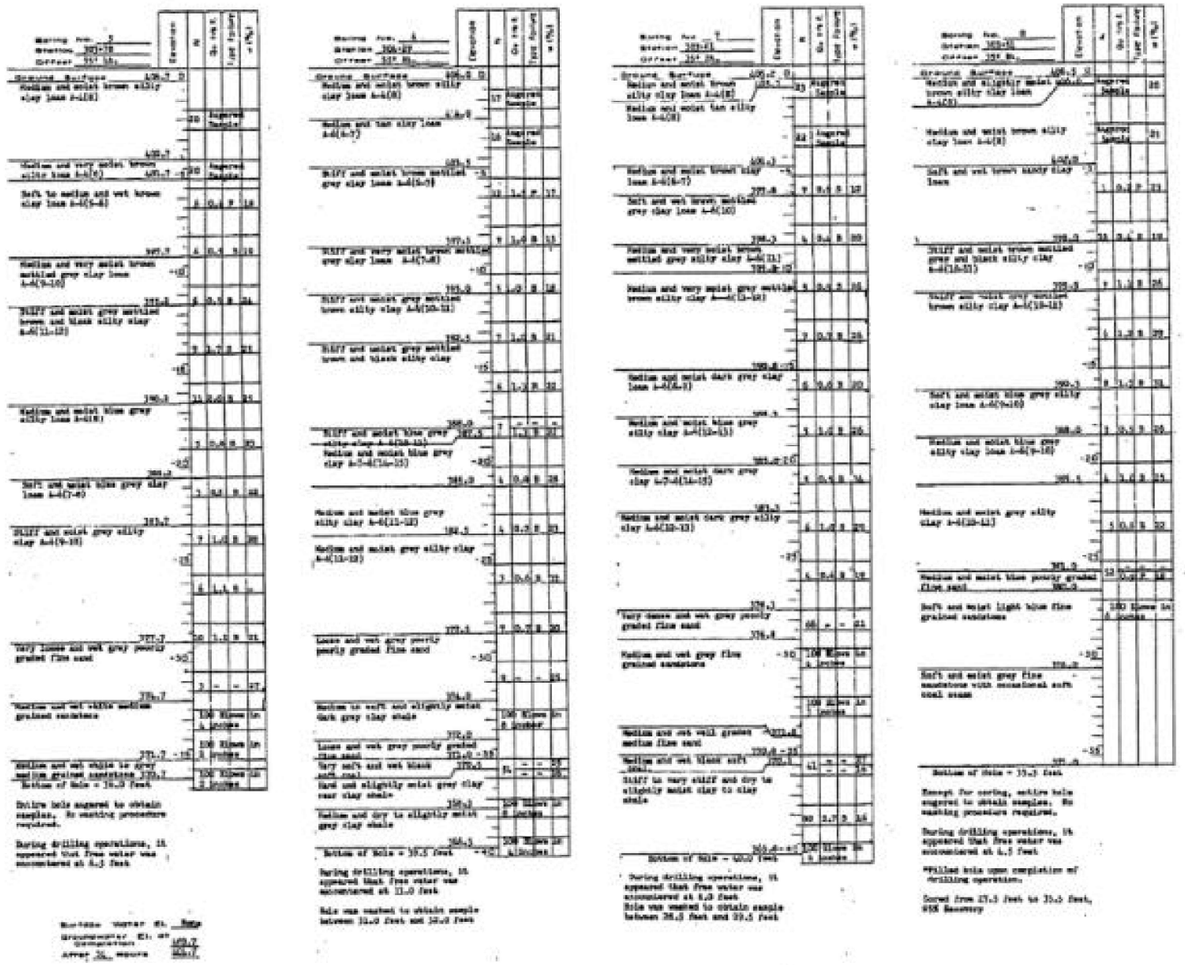

Boring No. 7
Station 303+78
Offset 151 Lt.

Ground Surface 406.3
Medium and moist brown silty clay loam A-4(8)
Medium and very moist brown silty clay loam A-4(9)
Soft to medium and wet brown clay loam A-6(5-8)
Medium and very moist brown mottled gray clay loam A-6(9-10)
Stiff and moist gray mottled brown and black silty clay A-6(11-12)
Medium and moist blue gray silty loam A-6(18)
Soft and moist blue gray clay loam A-6(7-8)
Stiff and moist gray silty clay A-6(9-10)
Very loose and wet gray poorly graded fine sand
Medium and wet white medium grained sandstone
Medium and wet white to gray medium grained sandstone
Bottom of Hole = 30.0 feet

Entire hole augered to obtain samples. No washing procedure required.

During drilling operations, it appeared that free water was encountered at 8.3 feet

Surface Water El. None
Groundwater El. at Completion 409.7
After 24 hours 406.7

Boring No. 4
Station 306+27
Offset 151 Rt.

Ground Surface 406.0
Medium and moist brown silty clay loam A-6(8)
Medium and tan clay loam A-6(6-7)
Stiff and moist brown mottled gray clay loam A-6(5-7)
Stiff and very moist brown mottled gray clay loam A-6(7-8)
Stiff and moist gray mottled brown silty clay A-6(10-11)
Stiff and moist gray mottled brown and black silty clay
Stiff and moist blue gray silty clay A-6(10-11)
Medium and moist blue gray silty clay A-6(11-12)
Medium and moist blue gray clay A-7-6(14-15)
Medium and moist blue gray silty clay A-6(11-12)
Medium and moist gray silty clay A-6(11-12)
Loose and wet gray poorly graded fine sand
Medium to soft and slightly moist dark gray clay shale
Loose and wet gray poorly graded fine sand
Very soft and wet black soft coal
Hard and slightly moist gray clay rear clay shale
Medium and dry to slightly moist gray clay shale
Bottom of Hole = 38.5 feet

During drilling operations, it appeared that free water was encountered at 11.0 feet

Hole was washed to obtain sample between 31.0 feet and 36.0 feet

Surface Water El. None
Groundwater El. at Completion 399.0
After 24 hours 395.0

Boring No. 7
Station 303+21
Offset 151 Rt.

Ground Surface 406.2
Medium and moist brown silty clay loam A-4(8)
Medium and moist tan silty loam A-4(8)
Medium and moist brown clay loam A-6(6-7)
Soft and wet brown mottled gray clay loam A-6(10)
Medium and very moist brown mottled gray silty clay A-6(11)
Medium and very moist gray mottled brown silty clay A-6(12-13)
Medium and moist dark gray clay loam A-6(8-9)
Medium and moist blue gray silty clay A-6(12-13)
Medium and moist dark gray clay A-7-6(14-15)
Medium and moist dark gray silty clay A-6(12-13)
Very loose and wet gray poorly graded fine sand
Medium and wet gray fine grained sandstone
Medium and wet well graded medium fine sand
Medium and wet black soft coal
Stiff to very stiff and dry to slightly moist clay to clay shale
Bottom of Hole = 42.0 feet

During drilling operations, it appeared that free water was encountered at 8.0 feet
Hole was washed to obtain sample between 38.0 feet and 39.5 feet

Surface Water El. None
Groundwater El. at Completion 400.6
After 24 hours 398.0

Boring No. 8
Station 302+32
Offset 151 Rt.

Ground Surface 406.3
Medium and slightly moist dark brown silty clay loam A-4(8)
Medium and moist brown silty clay loam A-6(8)
Soft and wet brown sandy clay loam
Stiff and moist brown mottled gray and black silty clay A-6(10-11)
Stiff and moist gray mottled brown silty clay A-6(10-11)
Soft and moist blue gray silty clay loam A-6(9-10)
Medium and moist blue gray silty clay loam A-6(9-10)
Medium and moist gray silty clay A-6(10-11)
Medium and moist blue poorly graded fine sand
Soft and moist light blue fine grained sandstone
Soft and moist gray fine sandstone with occasional soft coal seam
Bottom of Hole = 35.0 feet

Except for coring, entire hole augered to obtain samples. No washing procedure required.

During drilling operations, it appeared that free water was encountered at 4.5 feet

*Filled hole upon completion of drilling operation.

Cored from 27.5 feet to 35.5 feet, 95% Recovery

Surface Water El. None
Groundwater El. at Completion 400.5
After — hours —

DESIGNED Robert Sandoz
CHECKED J. Ellis
DRAWN RGD
CHECKED J.R.

Nov. 19 96

DRAWING W.E.B.
PLANS
APPROVED

BORING DATA
MARCUM BRANCH
F.A.I. RT. 57 SEC. 28-2B
FRANKLIN COUNTY
STA. 304+25

FILE NAME: H:\P221053 - D9 Various Various PTB 199-038.221053.017-57 over Marcum\Microsiation\0280090_0091-78884-041-Soil Boring Log 4.dgn

OATES ASSOCIATES
www.oatesassociates.com
ILLINOIS DESIGN FIRM LICENSE NO.: 184.001115

USER NAME =	DESIGNED -	REVISED -	
	CHECKED -	REVISED -	
PLOT SCALE =	DRAWN -	REVISED -	
PLOT DATE = 12/13/2024	CHECKED -	REVISED -	

STATE OF ILLINOIS
DEPARTMENT OF TRANSPORTATION

SOIL BORING LOGS
STRUCTURE NO. 028-0090 (S.B.) & 028-0091 (N.B.)

SHEET 41 OF 41 SHEETS

F.A.I. RTE.	SECTION	COUNTY	TOTAL SHEETS	SHEET NO.
57	(28-2)B-2	FRANKLIN	598	381

CONTRACT NO. 78884

ILLINOIS | FED. AID PROJECT

Benchmark: PSM 101+00, Elev. 413.989. IDOT Monument in CL of I-57 at Sta. 101+00, Approx. 0.3 miles S of Ina Overhead Structure.

Existing Structure: SN 041-7024 was originally constructed in 1964 as FAI 57, Section 41-1. The original structure was a single barrel 8'x8' CIP culvert with flared wingwalls, 152'-3" length on a 7 degree skew. The culvert was later lengthened to 174'-6". The structure will be replaced utilizing staged construction.

No Salvage.

Precast option is not allowed.

STA. 97+45.25
BUILT 202X BY
STATE OF ILLINOIS
F.A.I. RT. 57
SEC. (28-2)(B-2); (28-1)(B-2)
LOADING HL-93
STR. NO. 041-7101

NAME PLATE

See Std. 515001

INDEX OF SHEETS

TOTAL BILL OF MATERIAL

ITEM	UNIT	QUANTITY
Porous Granular Embankment	Cu. Yd.	1,010
Stone Riprap, Class A5	Sq. Yd.	128
Filter Fabric	Sq. Yd.	128
Removal of Existing Structures	Each	1
Reinforcement Bars	Pound	61,150
Bar Splicers	Each	140
Name Plates	Each	1
Temporary Soil Retention System	Sq. Ft.	267
Concrete Box Culverts	Cu. Yd.	298.9
Geocomposite Wall Drain	Sq. Yd.	340
Waterproofing Membrane System for Buried Structures	Sq. Yd.	340
Removal and Disposal of Unsuitable Materials for Structures	Cu. Yd.	296
Rock Fill - Foundation	Ton	607

The Contractor shall excavate to the specified depth for placement of the Rock Fill Foundation under the culvert extensions and the wingwall footings (if present) and allow the District inspectors to test and verify that the foundation soils have a minimumQu of at least 2.5 tsf. If the required soil strength is not present, the Contractor shall excavate an additional depth and width as directed by the Engineer to locate suitable strength material. The excavated area shall then be backfilled to the proper elevations using Rockfill capped with 6" of Coarse Aggregate. Cost of excavation and backfill material will be paid for per Art. 109.04 (b) of the Standard Specifications.

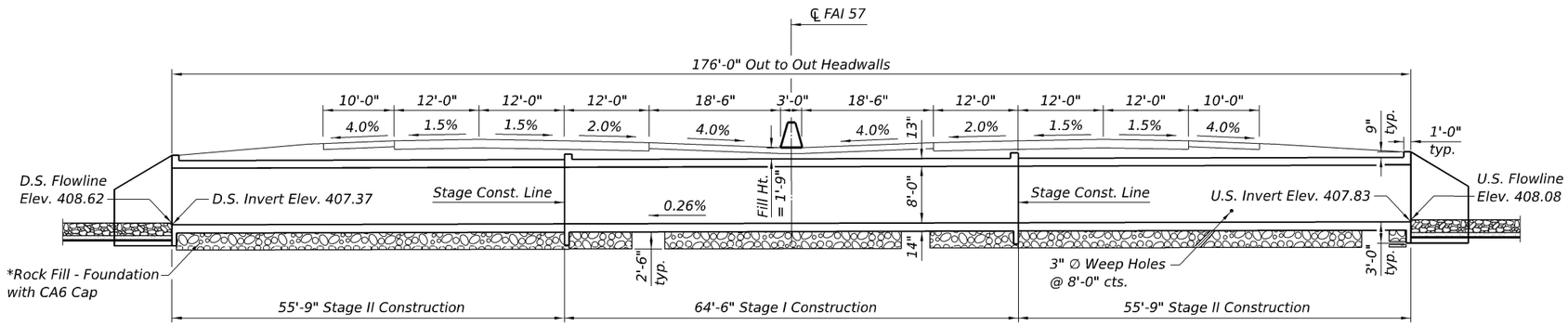

LONGITUDINAL SECTION

(Looking North)

*The Rock Fill - Foundation shall be capped with 6 in of CA6 and satisfy the Standard Specification unless otherwise indicated in the Special Provisions. The cost of capping materials shall be included in the pay item "Rock Fill - Foundation".

N

APPROVED
For Structural Adequacy Only
Engineer of Bridges & Structures

10-9-2024
ILLINOIS STRUCTURAL NO. 081-007505

LICENSED STRUCTURAL ENGINEER
TYLER J. ZIEGLER
081-007505
STATE OF ILLINOIS

Expires 11-30-2024

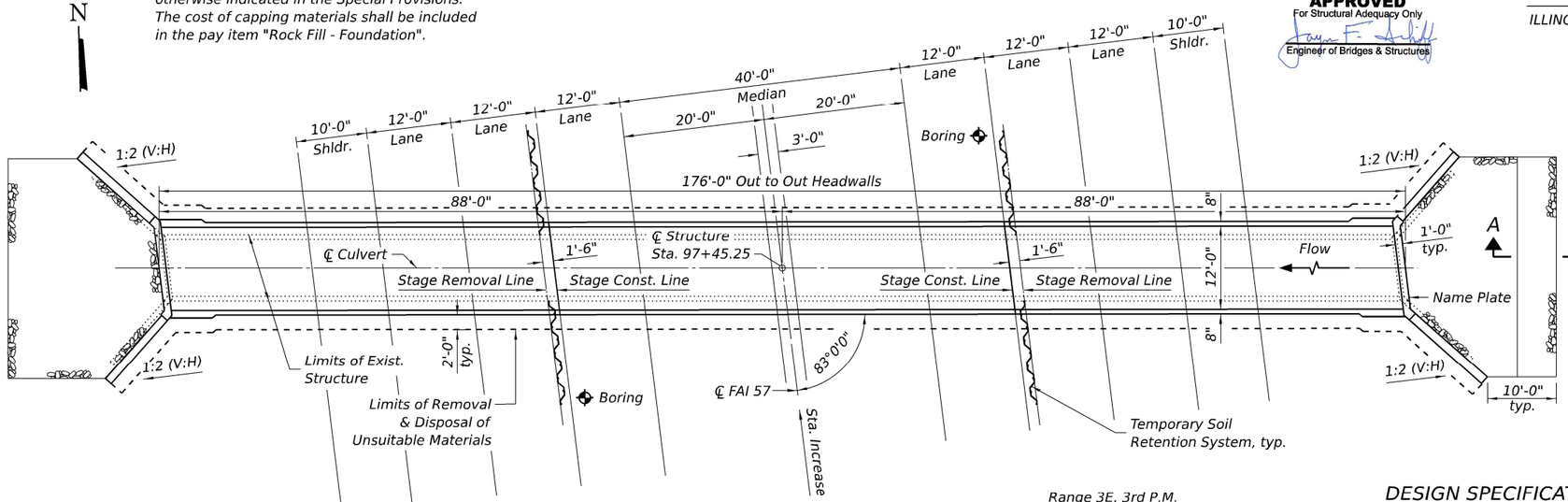

PLAN

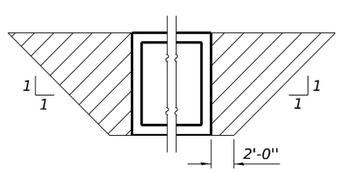

PAY LIMITS FOR POROUS GRANULAR EMBANKMENT

(Hatched area)

HYDRAULIC DATA

Drainage Area = 0.57 sq. mi.
Design Discharge = 748 cfs
Design Headwater Elevation = 416.05
100 Year Discharge = 840 cfs
100 Year Headwater Elevation = 416.72

Range 3E, 3rd P.M.

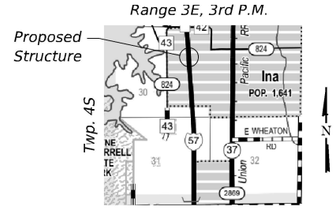

LOCATION SKETCH

DESIGN SPECIFICATIONS

2020 AASHTO LRFD Bridge Design Specifications, 9th Edition

LOADING HL-93

Allow 50#/sq. ft. for future wearing surface.

DESIGN STRESSES

FIELD UNITS

f 'c = 3,500 psi
fy = 60,000 psi (Reinforcement)

GENERAL NOTES

1. See roadway plans for quantities of Temporary Concrete Barrier, Earth Excavation, and Pavement Removal.
2. Layout of the slope protection system may be varied to suit ground conditions in the field as directed by the Engineer.

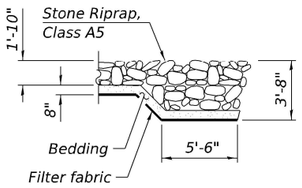

SECTION A-A

GENERAL PLAN AND ELEVATION
I-57 OVER UNNAMED DITCH
F.A.I. 57 - SEC. (28-2)(B-2); (28-1)(B-2)
JEFFERSON COUNTY
STA. 97+45.25
STRUCTURE NO. 041-7101

MODEL: 1 [Sheet]
FILE NAME: P:\Transportation\4858-IDOT 198-34 Dist. 9 VA\ WO32\24-Structures\CAD - ORD\Sheets\SN 041-7024 - 1_GPE.dgn

CDI
CIVIL DESIGN, INC.
WBE / DBE
EFFINGHAM, IL
LICENSE #184.003222

USER NAME = twendt	DESIGNED - TAW	REVISED -	
	DRAWN - TAW	REVISED -	
	CHECKED - TJZ	REVISED -	
PLOT DATE = 10/9/2024	DATE - 7/10/2024	REVISED -	

STATE OF ILLINOIS
DEPARTMENT OF TRANSPORTATION

GENERAL PLAN AND ELEVATION
STRUCTURE NO. 041-7101

SCALE: | SHEET 1 OF 8 SHEETS | STA. | TO STA.

F.A.I. RTE.	SECTION	COUNTY	TOTAL SHEETS	SHEET NO.
57	(28-2)B-2; (28-1)B-2	JEFFERSON	598	382
		CONTRACT NO. 78884		
		ILLINOIS	FED. AID PROJECT	

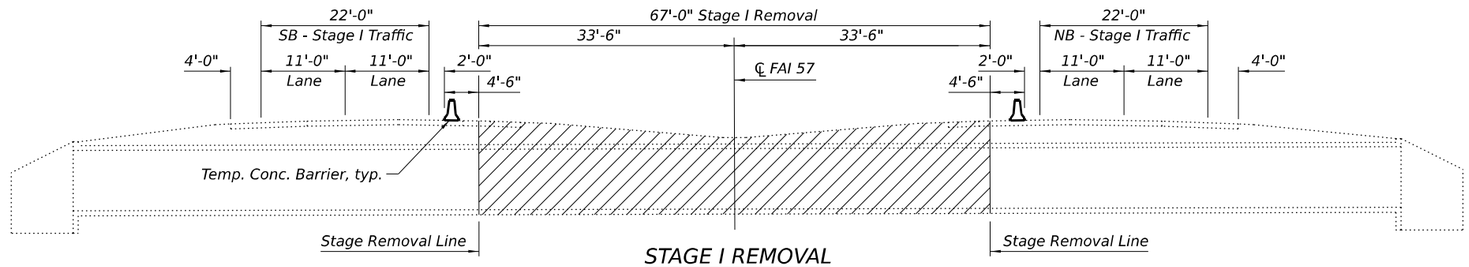

STAGE I REMOVAL

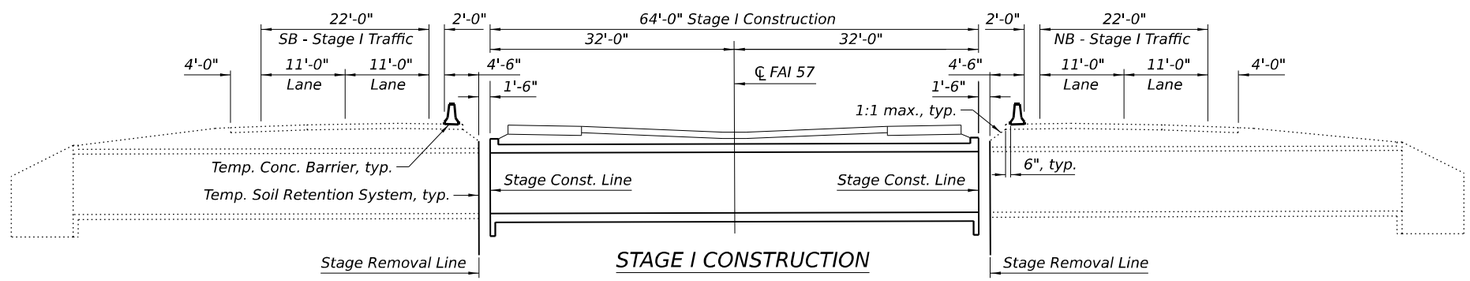

STAGE I CONSTRUCTION

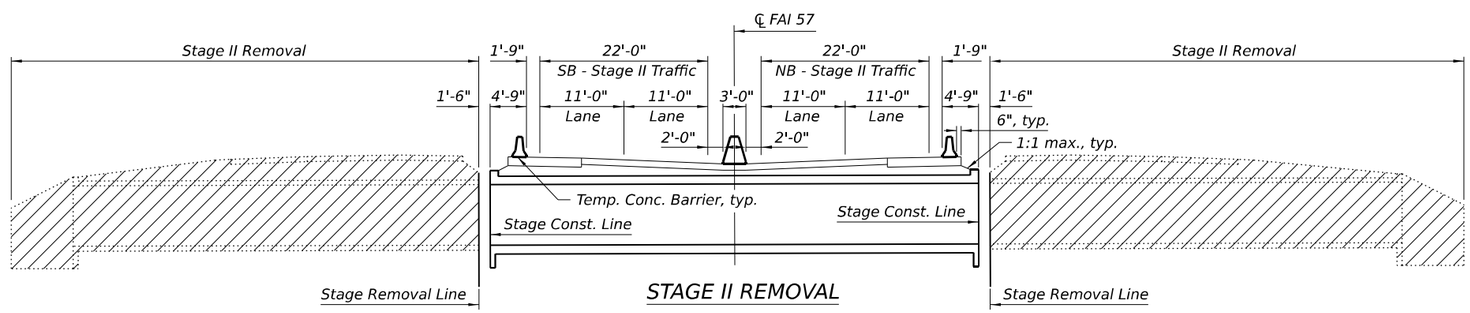

STAGE II REMOVAL

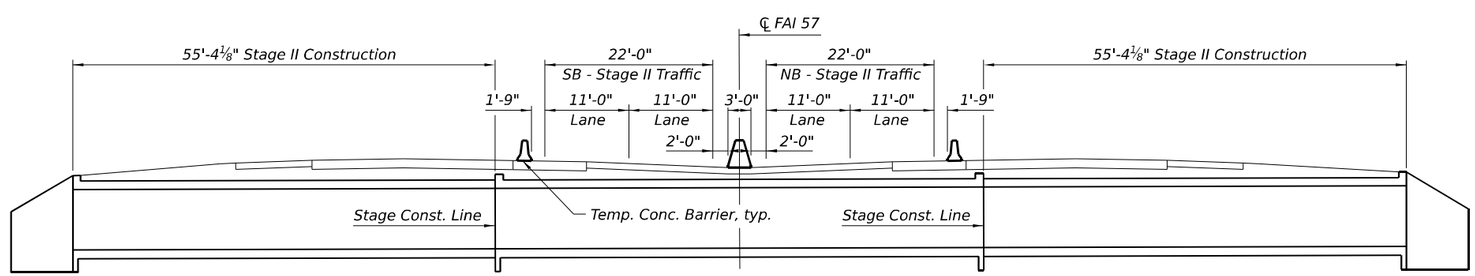

STAGE II CONSTRUCTION

Notes:

1. All staging sections looking north.
2. All dimensions shown are perpendicular to ℄ FAI 57.
3. Hatched areas indicate removal.
4. See roadway plans for quantity of Temporary Concrete Barrier.

MODEL: 3 [Sheet]
FILE NAME: P:\Transportation\4856-IDOT 198-34 Dist. 9 V-V__WO32\24-Structures\CAD - ORD\Sheets\SN 041-7024 - 2. Stage Const. Details.dgn

CDI CIVIL DESIGN, INC. WBE / DBE EFFINGHAM, IL LICENSE #184.003222

USER NAME = tziegler	DESIGNED - TAW	REVISED -	
	DRAWN - TAW	REVISED -	
	CHECKED - TJZ	REVISED -	
PLOT DATE = 7/10/2024	DATE - 7/10/2024	REVISED -	

STATE OF ILLINOIS
DEPARTMENT OF TRANSPORTATION

STAGE CONSTRUCTION DETAILS
STRUCTURE NO. 041-7101

SCALE: SHEET 2 OF 8 SHEETS STA. TO STA.

F.A.I. RTE.	SECTION	COUNTY	TOTAL SHEETS	SHEET NO.
57	(28-2)B-2; (28-1)B-2	JEFFERSON	598	383
		CONTRACT NO. 78884		
		ILLINOIS FED. AID PROJECT		

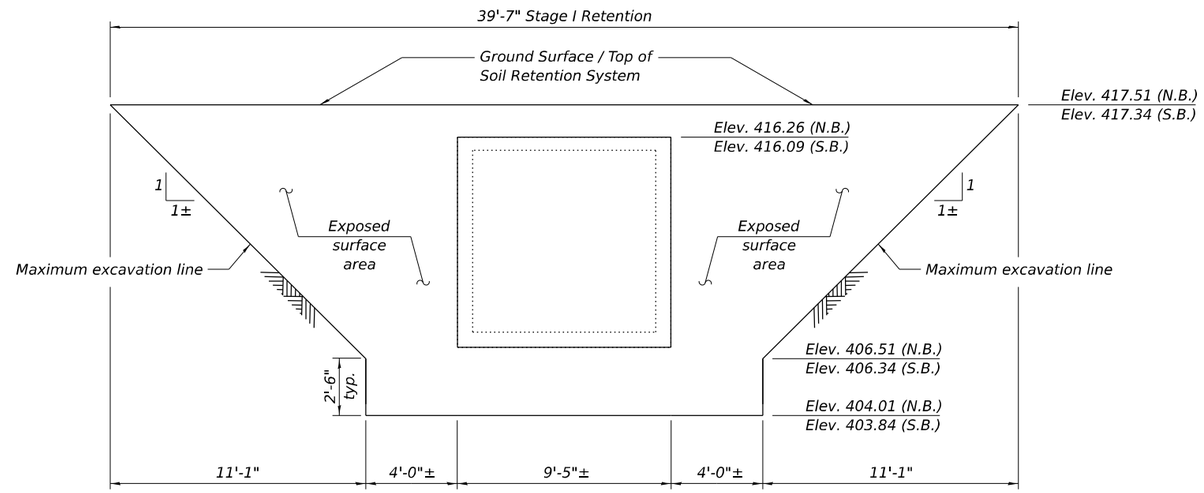

STAGE I CONSTRUCTION

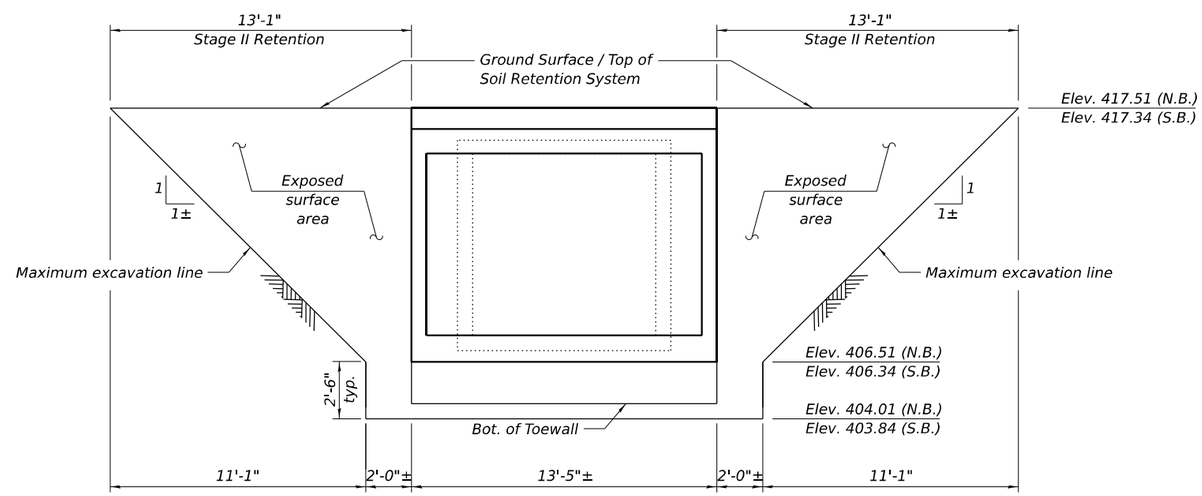

STAGE II CONSTRUCTION

Note:

A cantilevered sheet piling design does not appear feasible and additional members or other retention system may be necessary. The Contractor shall submit a temporary soil retention system design including plan details and calculations for review and acceptance by the Engineer.

MODEL: 4 [Sheet]
FILE NAME: P:\Transportation\4858-IDOT 199-34 Dist. 9 V-\\ WO3224-Structures\CAD - ORD\Sheets\SN 041-7024 - 3. TSRS.dgn

CIVIL DESIGN, INC.
WBE / DBE
EFFINGHAM, IL
LICENSE #184.003222

USER NAME = twendt	DESIGNED - TAW	REVISED -	
	DRAWN - TAW	REVISED -	
	CHECKED - TJZ	REVISED -	
PLOT DATE = 10/8/2024	DATE - 7/10/2024	REVISED -	

STATE OF ILLINOIS
DEPARTMENT OF TRANSPORTATION

TEMPORARY SOIL RETENTION SYSTEM
STRUCTURE NO. 041-7101

SCALE: | SHEET 3 OF 8 SHEETS | STA. | TO STA.

F.A.I. RTE.	SECTION	COUNTY	TOTAL SHEETS	SHEET NO.
57	(28-2)B-2; (28-1)B-2	JEFFERSON	598	384
		CONTRACT NO. 78884		
	ILLINOIS	FED. AID PROJECT		

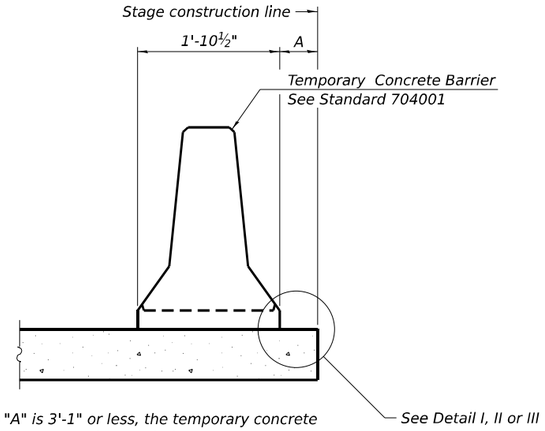

When "A" is 3'-1" or less, the temporary concrete barrier shall be restrained to the new slab according to Detail I, II or III. No restraint is required when "A" is greater than 3'-1".

NEW SLAB OR NEW DECK BEAM

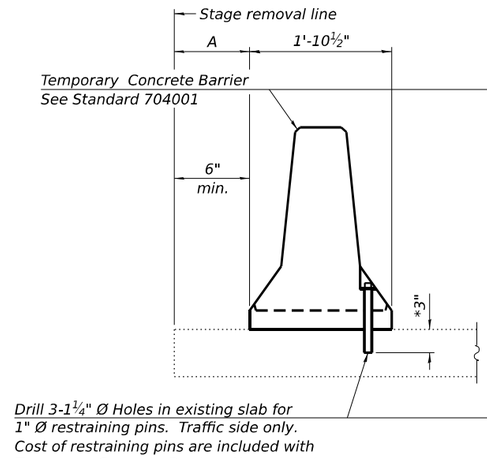

EXISTING SLAB

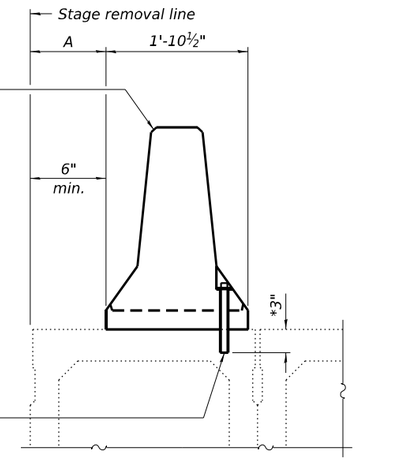

* When hot-mix asphalt wearing surface is present, embedment shall be 3" plus the wearing surface depth.

EXISTING DECK BEAM

SECTIONS THRU SLAB OR DECK BEAM

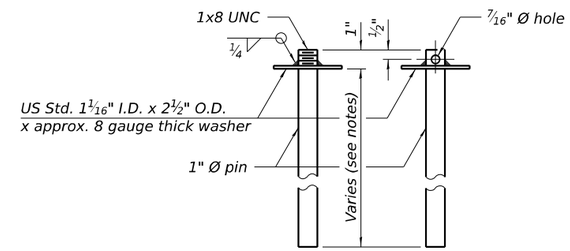

RESTRAINING PIN

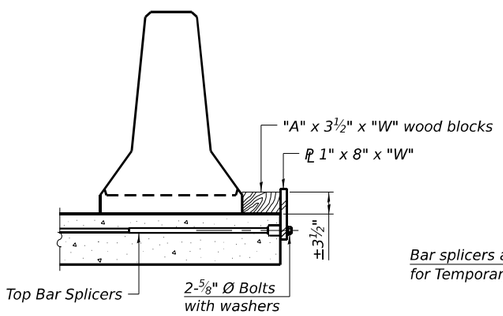

DETAIL I

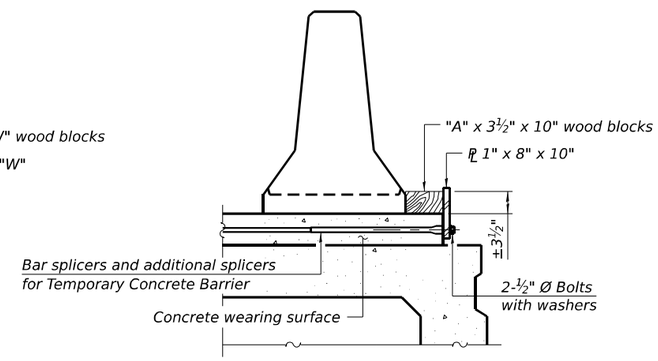

DETAIL II

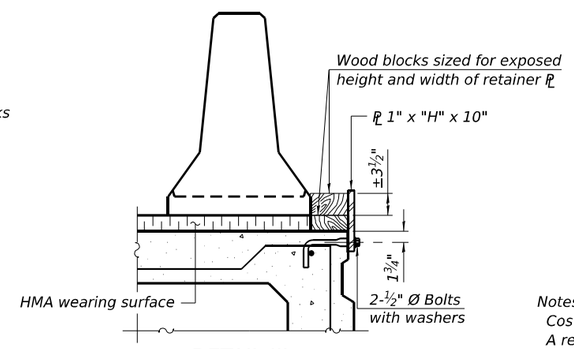

DETAIL III

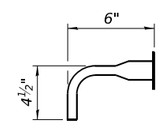

BAR SPLICER FOR #4 BAR - DETAIL III

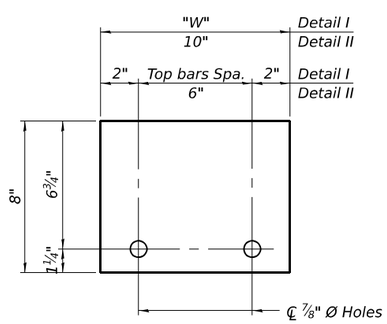

STEEL RETAINER PL 1" x 8" x "W"

(Detail I and II)

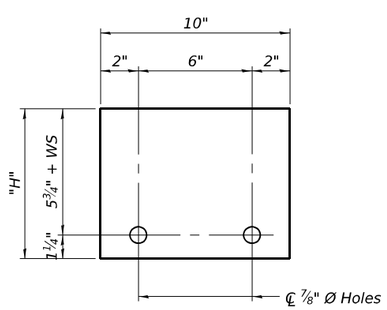

STEEL RETAINER PL 1" x "H" x 10"

(Detail III)

Notes:

Cost of retainer assembly is included with Temporary Concrete Barrier.

A retainer assembly shall be located at the approximate ℄ of each temporary concrete barrier.

The retainer plate shall not be removed until the concrete on the adjacent stage is ready to be poured. For Detail III applications the retainer plate shall not be removed until just prior to placing the adjacent beam.

When the 'A' dimension is less than 1½", the wood block shall be omitted and the barrier shall be placed in direct contact with the steel retainer plate. For deck beam applications the minimum required 'A' distance is 6" to accommodate the shear key clamping device.

Detail I - Installation for a new bridge deck or bridge slab.

Detail II - Installation for a new deck beam with an initial concrete wearing surface. Additional bar splicers shall be provided at 6'-0" centers and paired with the bar splicers of the concrete wearing surface reinforcement to accommodate the installation of the retainer assemblies. The cost of the additional bar splicers is included with the concrete wearing surface.

Detail III - Installation for a new deck beam with no initial wearing surface or with an initial hot-mix asphalt (HMA) wearing surface present. The deck beam directly beneath the temporary concrete barrier shall be fabricated with bar splicer inserts in the side of the beam, as detailed, to accommodate the installation of the retainer assemblies. A pair of bar splicers, 6" apart, shall be placed at 6'-0" centers along the length of the beam. The cost of the bar splicers is included with the deck beam.

RAILING CRITERIA

NCHRP 350 Test Level	3
Railing Weight (plf)	440

R-27

5-15-2023

MODEL: 5 [Sheet]
FILE NAME: P:\Transportation\4858-IDOT 198-34 Dist. 9 V-V_ WO3224-Structures\CAD - ORD\Sheets\SN 041-7024 - 4_Temp Barrier.dgn

CIVIL DESIGN, INC.
WBE / DBE
EFFINGHAM, IL
LICENSE #184.003222

USER NAME = tziegler	DESIGNED - TAW	REVISED -	
	DRAWN - TAW	REVISED -	
	CHECKED - TJZ	REVISED -	
PLOT DATE = 7/10/2024	DATE - 7/10/2024	REVISED -	

STATE OF ILLINOIS
DEPARTMENT OF TRANSPORTATION

TEMPORARY CONCRETE BARRIER
STRUCTURE NO. 041-7101

SCALE: | SHEET 4 OF 8 SHEETS | STA. | TO STA.

F.A.I. RTE.	SECTION	COUNTY	TOTAL SHEETS	SHEET NO.
57	(28-2)B-2; (28-1)B-2	JEFFERSON	598	385
		CONTRACT NO. 78884		
	ILLINOIS	FED. AID PROJECT		

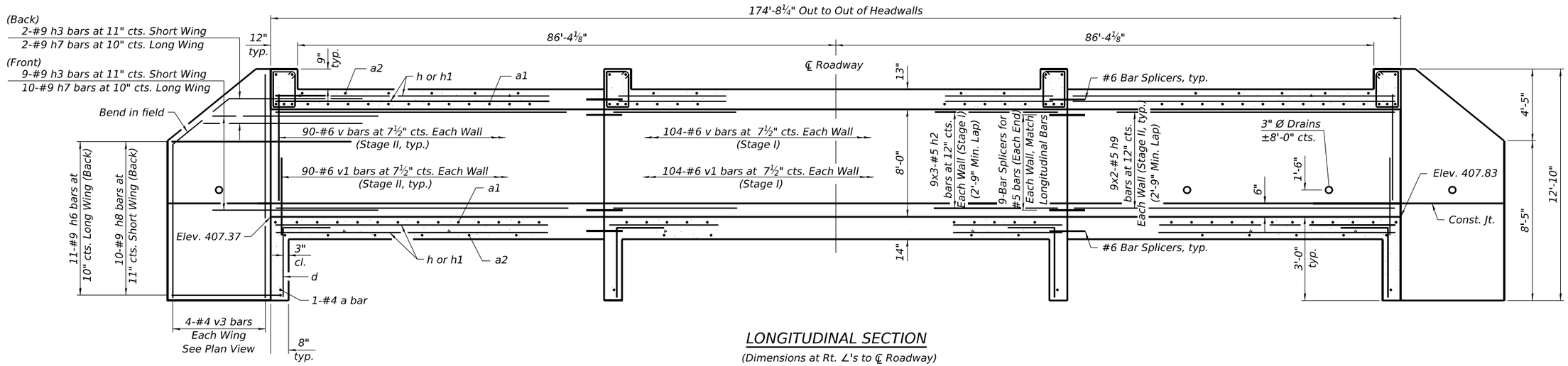

LONGITUDINAL SECTION

(Dimensions at Rt. ∠'s to ℄ Roadway)

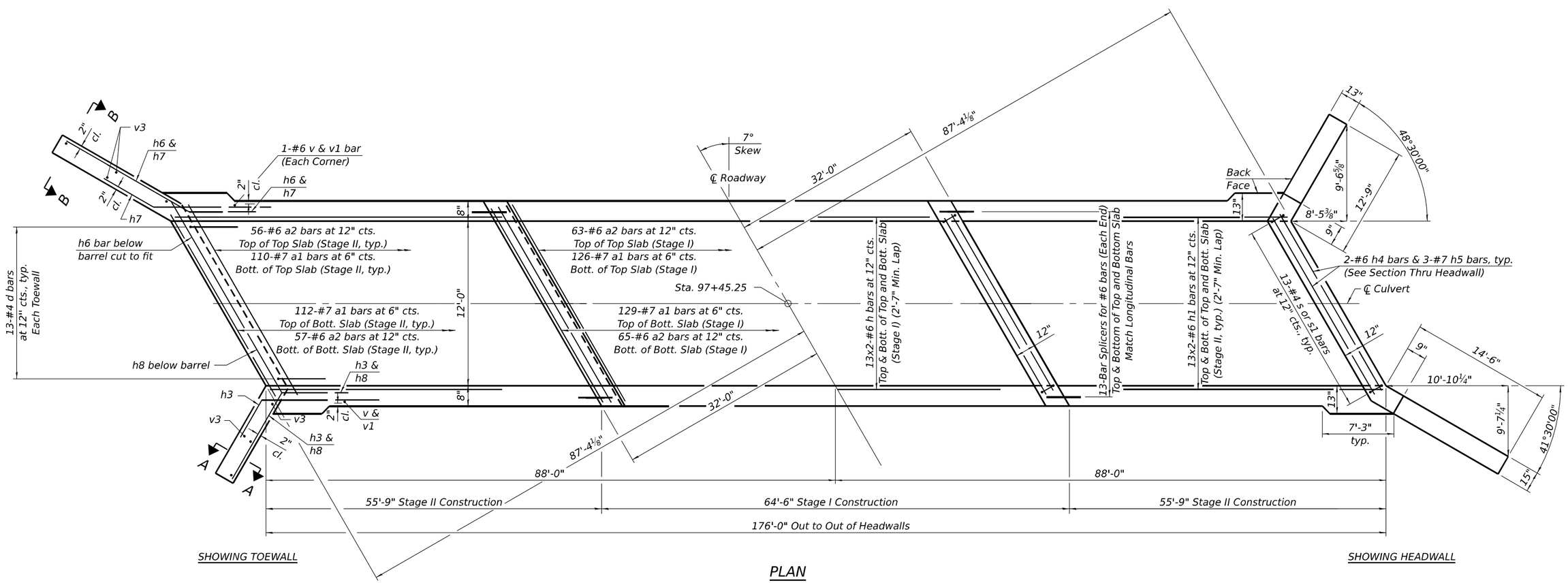

SHOWING TOEWALL

PLAN

SHOWING HEADWALL

MODEL: 6 [Sheet]
FILE NAME: P:\Transportation\4858-IDOT 198-34 Dist. 9 V-V_ WO3224-Structures\CAD - ORD\Sheets\SN 041-7024 - 5. Box Detail 1.dgn

CIVIL DESIGN, INC. WBE / DBE EFFINGHAM, IL LICENSE #184.003222	USER NAME = tziegler	DESIGNED - TAW	REVISED -	STATE OF ILLINOIS DEPARTMENT OF TRANSPORTATION	CULVERT DETAILS STRUCTURE NO. 041-7101
		DRAWN - TAW	REVISED -		
		CHECKED - TJZ	REVISED -		
	PLOT DATE = 7/22/2024	DATE - 7/10/2024	REVISED -		SCALE: SHEET 5 OF 8 SHEETS STA. TO STA.

F.A.I. RTE.	SECTION	COUNTY	TOTAL SHEETS	SHEET NO.
57	(28-2)B-2; (28-1)B-2	JEFFERSON	598	386
		CONTRACT NO. 78884		
	ILLINOIS	FED. AID PROJECT		

* Nonwoven geotextile fabric shall conform to the requirements of Article 1080.01 of the Standard Specifications. The minimum weight of the fabric shall be 6 ounces per square yard.

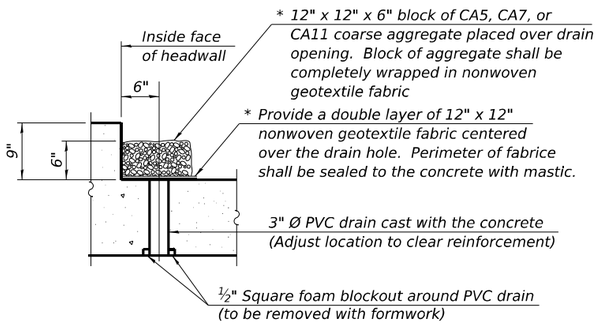

DRAIN DETAIL

(All costs associated with furnishing and constructing the above drain detail will not be measured for payment but shall be included in the contract unit price for the associated work.)

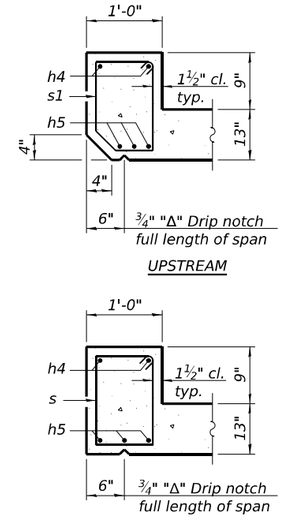

SECTION THRU HEADWALL

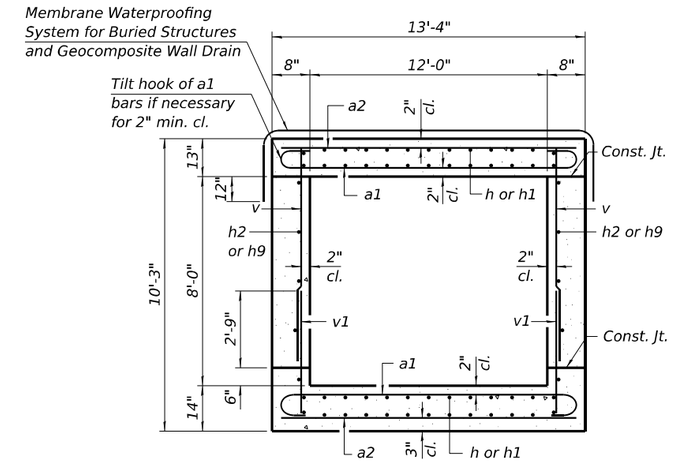

SECTION THRU BARREL

BILL OF MATERIAL

Bar	No.	Size	Length	Shape
a	4	#4	13'-1"	
a1	699	#7	14'-9"	
a2	354	#6	13'-1"	
d	52	#4	4'-5"	
h	104	#6	33'-5"	
h1	208	#6	29'-0"	
h2	54	#5	23'-3"	
h3	22	#9	8'-0"	
h4	8	#6	13'-1"	
h5	12	#7	13'-1"	
h6	22	#9	17'-6"	
h7	24	#9	8'-0"	
h8	20	#9	15'-9"	
h9	72	#5	29'-1"	
s	39	#4	5'-5"	
s1	13	#4	5'-3"	
v	572	#6	8'-3"	
v1	572	#6	4'-2"	
v3	16	#4	12'-5"	
Concrete Box Culverts		Cu. Yd.	298.9	
Reinforcement Bars		Pound	61,150	

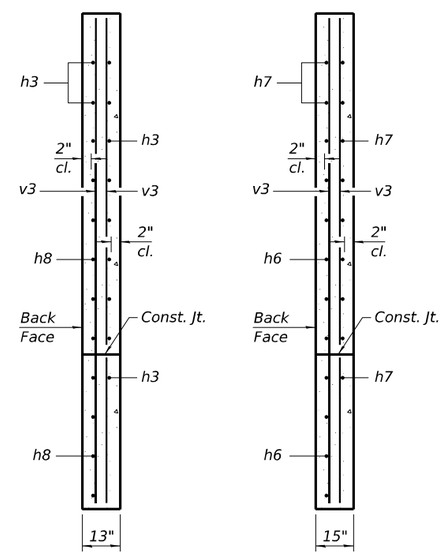

SECTION A-A

SECTION B-B

Notes:

1. A distance of half the length of the wingwall but not less than six feet of the barrel shall be poured monolithically with the wingwalls.

2. Bars indicated thus 12 x 4-#5 etc. indicates 12 lines of bars with 4 lengths per line.

3. At the Contractor's option, a longer v1 bar may be ordered to replace the v bar. No reduction in quantities shall be made for this substitution.

4. Geocomposite Wall Drain shall be according to Section 591 of the Standard Specifications, except that concrete nails shall not be used in areas where it overlaps Membrane Waterproofing System for Buried Structures.

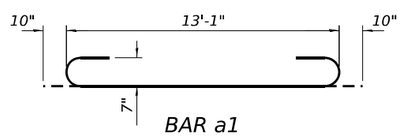

BAR a1

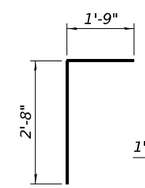

BAR d

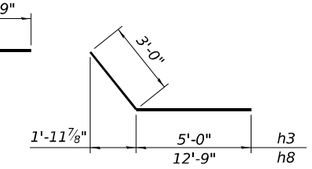

BARS h3 & h8

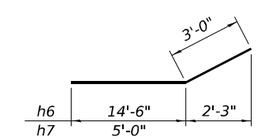

BARS h6 & h7

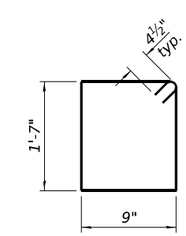

BAR s

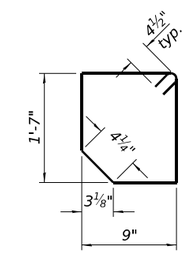

BAR s1

MODEL: 8 [Sheet]
FILE NAME: P:\Transportation\4858-IDOT 198-34 Dist. 9 V-V__WO32\24-Structures\CAD - ORD\Sheets\SN 041-7024 - 6. Box Detail 2.dgn

CDI CIVIL DESIGN, INC. WBE / DBE EFFINGHAM, IL LICENSE #184.003222

USER NAME = twendt	DESIGNED - TAW	REVISED -	
	DRAWN - TAW	REVISED -	
	CHECKED - TJZ	REVISED -	
PLOT DATE = 7/19/2024	DATE - 7/10/2024	REVISED -	

STATE OF ILLINOIS
DEPARTMENT OF TRANSPORTATION

CULVERT DETAILS
STRUCTURE NO. 041-7101

SCALE: | SHEET 6 OF 8 SHEETS | STA. | TO STA.

F.A.I. RTE.	SECTION	COUNTY	TOTAL SHEETS	SHEET NO.
57	(28-2)B-2; (28-1)B-2	JEFFERSON	598	387
		CONTRACT NO. 78884		
		ILLINOIS	FED. AID PROJECT	

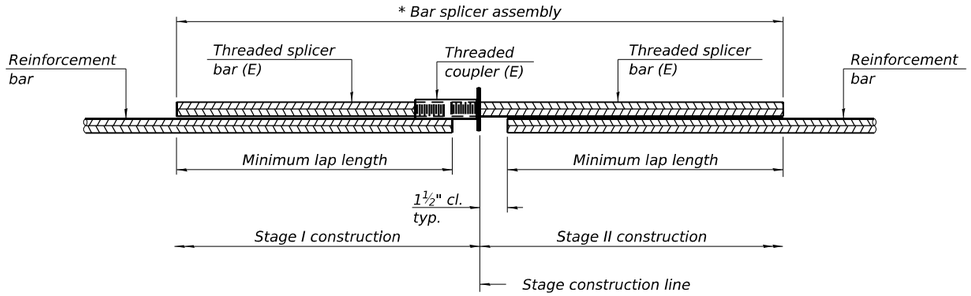

STANDARD BAR SPLICER ASSEMBLY PLAN

Only bar splicer assemblies as presented on the approved QPL list may be used.

Threaded splicer bar length = min. lap length + 1½" + thread length

* Epoxy not required on Bar Splicer Assembly components used in conjunction with black bars.

Location	Bar size	No. assemblies required	Minimum lap length
Walls	#5	36	2'-9"
Top Slab	#6	52	2'-7"
Bottom Slab	#6	52	2'-7"

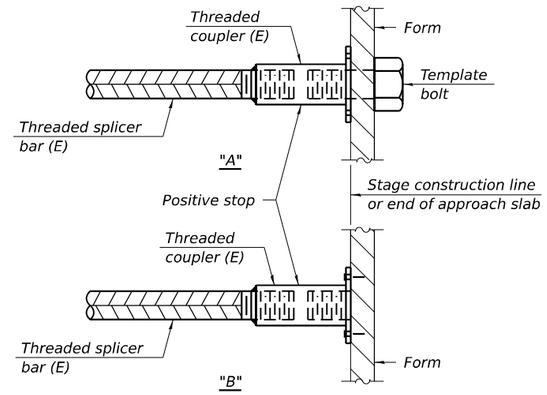

INSTALLATION AND SETTING METHODS

"A" : Set bar splicer assembly by means of a template bolt.
"B" : Set bar splicer assembly by nailing to wood forms or cementing to steel forms.
(E) : Indicates epoxy coating.

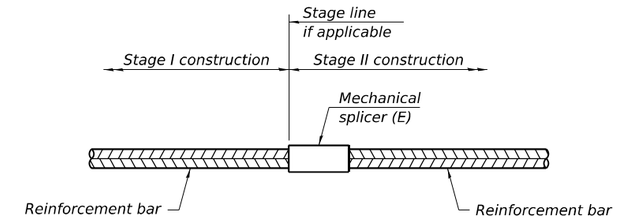

STANDARD MECHANICAL SPLICER

Location	Bar size	No. assemblies required

Notes:
Splicer bars shall be deformed with threaded ends and have a minimum 60 ksi yield strength.
All reinforcement shall be lapped and tied to the splicer bars.
Bar splicer assemblies shall be epoxy coated according to the requirements for reinforcement bars. See Section 508 of the Standard Specifications.
See approved list of bar splicer assemblies and mechanical splicers for alternatives.

BSD-1 5-15-2023

MODEL: 8 [Sheet]
FILE NAME: P:\Transportation\4858-IDOT 198-34 Dist. 9 V-V_ WO32\24-Structures\CAD - ORD\Sheets\SN 041-7024 - 7, Bar Splicers.dgn

CDI CIVIL DESIGN, INC. WBE / DBE EFFINGHAM, IL LICENSE #184.003222

USER NAME = twendt	DESIGNED - TAW	REVISED -	STATE OF ILLINOIS DEPARTMENT OF TRANSPORTATION
	DRAWN - TAW	REVISED -	
	CHECKED - TJZ	REVISED -	
PLOT DATE = 7/18/2024	DATE - 7/10/2024	REVISED -	

BAR SPLICER ASSEMBLY AND MECHANICAL SPLICER DETAILS
STRUCTURE NO. 041-7101

SCALE: SHEET 7 OF 8 SHEETS STA. TO STA.

F.A.I. RTE.	SECTION	COUNTY	TOTAL SHEETS	SHEET NO.
57	(28-2)B-2; (28-1)B-2	JEFFERSON	598	388
		CONTRACT NO. 78884		
	ILLINOIS	FED. AID PROJECT		

MODEL: 9 [Sheet]
FILE NAME: P:\Transportation\4858-IDOT 198-34 Dist. 9 V-V_ WO32\24-Structures\CAD - ORD\Sheets\SN 041-7024 - 8. Borings.dgn

CIVIL DESIGN, INC.
WBE / DBE
EFFINGHAM, IL
LICENSE #184.003222

USER NAME = tziegler	DESIGNED - TAW	REVISED -
	DRAWN - TAW	REVISED -
	CHECKED - TJZ	REVISED -
PLOT DATE = 7/10/2024	DATE - 7/10/2024	REVISED -

STATE OF ILLINOIS
DEPARTMENT OF TRANSPORTATION

BORING LOGS
STRUCTURE NO. 041-7101

SCALE: | SHEET 8 OF 8 SHEETS | STA. | TO STA.

F.A.I. RTE.	SECTION	COUNTY	TOTAL SHEETS	SHEET NO.
57	(28-2)B-2; (28-1)B-2	JEFFERSON	598	389
		CONTRACT NO. 78884		
	ILLINOIS	FED. AID PROJECT		

FINAL SURVEY		BY	DATE
NOTE BOOK	SURVEYED		
	PLOTTED		
	TEMPLATE		
	AREAS		
	AREAS CHECKED		
NO.			

ORIGINAL SURVEY		BY	DATE
NOTE BOOK	SURVEYED		
	PLOTTED		
	TEMPLATE		
	AREAS		
	AREAS CHECKED		
NO.			

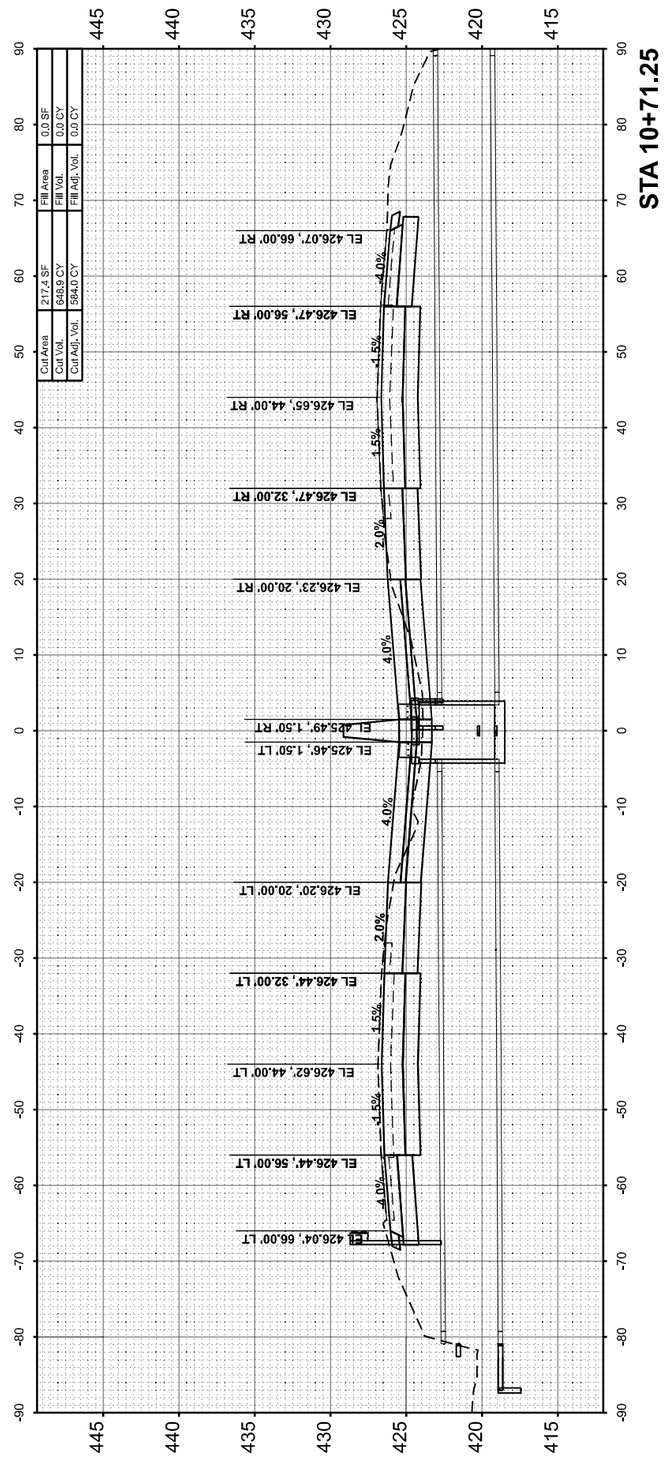

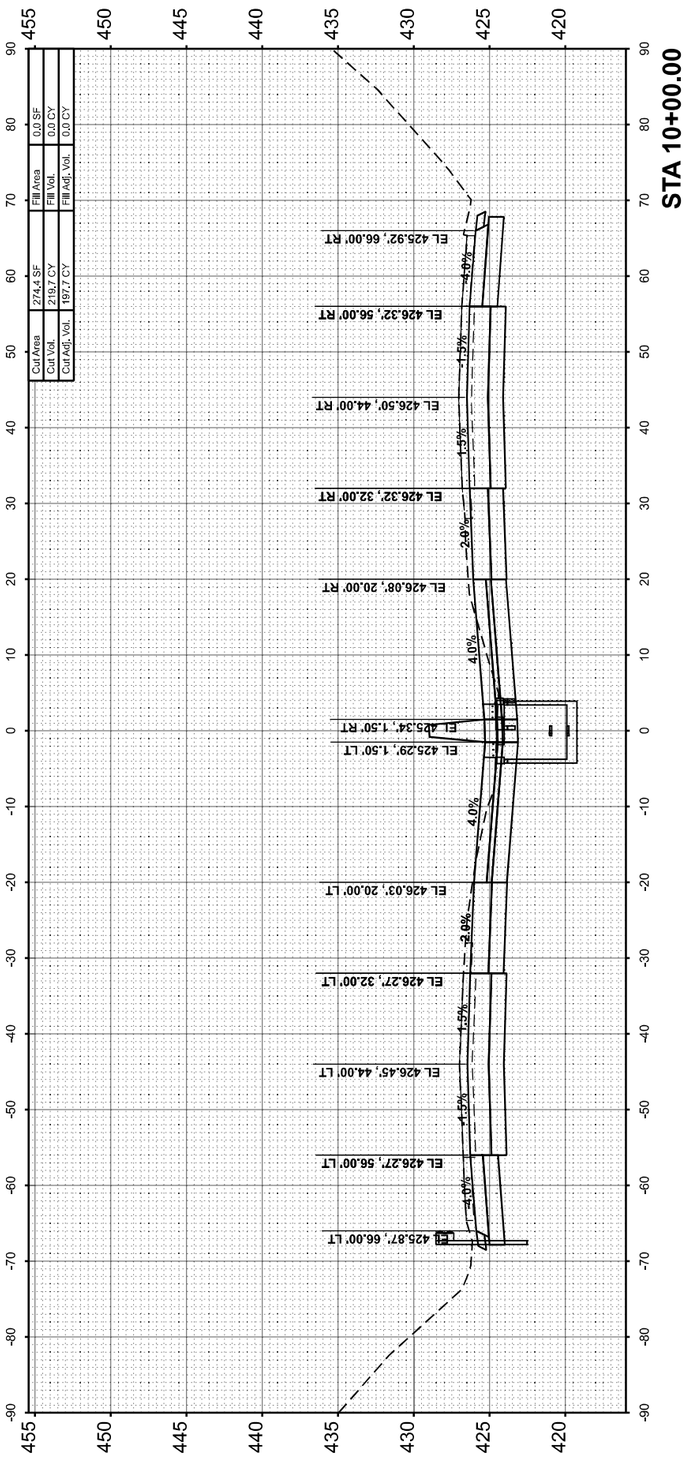

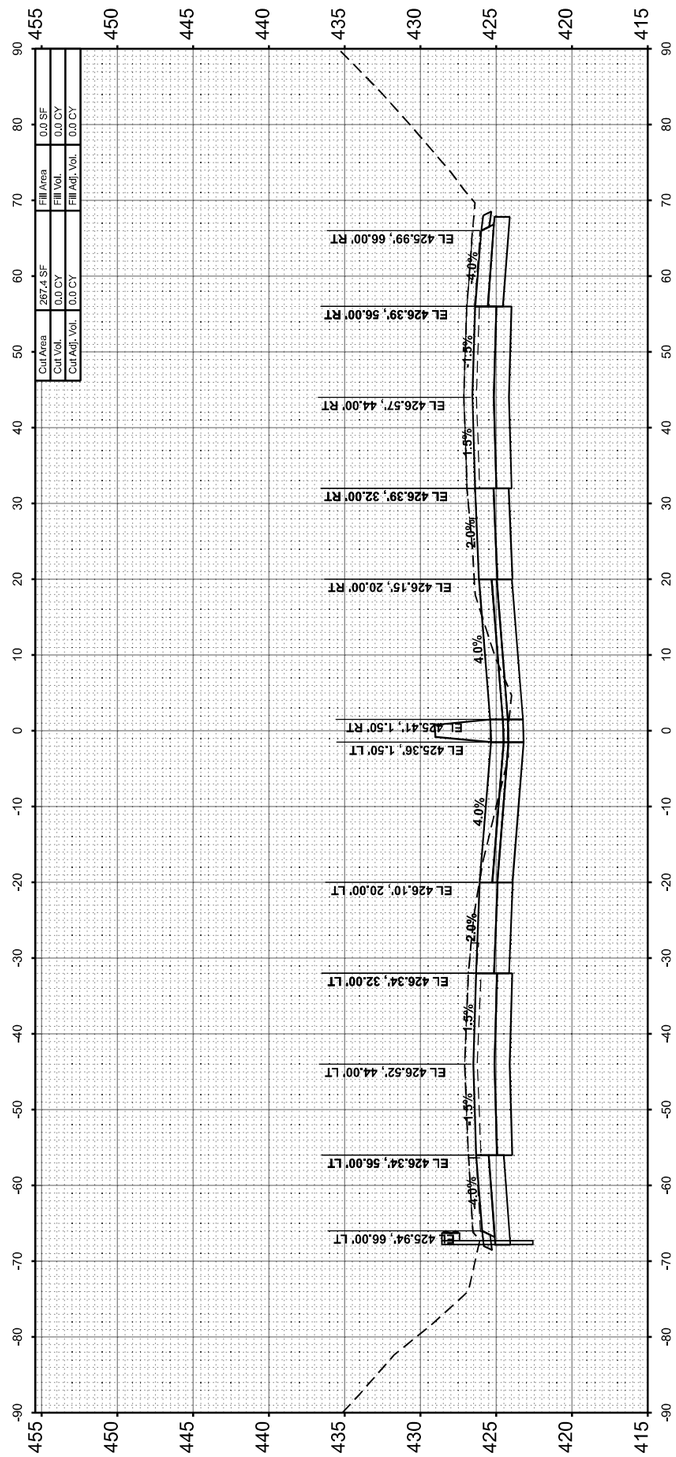

MODEL: I57FRANKLIN-A-9+78.11 [Sheet]
FILE NAME: pw://PW01.hornershifrin.com:IS IDOT/Documents/Z106100\004-PTB198-034_D9VV/Z106102-457-2\ed\Land\Ph2/CAD_Sheets/D978884-ed-lrcsshf-rank8\rudgn

HORNER SHIFRIN WWW.HORNERSHIFRIN.COM	USER NAME = bclimmermann	DESIGNED -	REVISED -
		DRAWN -	REVISED -
	PLOT SCALE = 0.16666633 ' / in.	CHECKED -	REVISED -
	PLOT DATE = 10/16/2024	DATE -	REVISED -

STATE OF ILLINOIS
DEPARTMENT OF TRANSPORTATION

CROSS SECTIONS
FRANKLIN COUNTY

SCALE:10 H : 5 V | SHEET 1 OF 121 SHEETS | STA. TO STA.

F.A.I RTE.	SECTION	COUNTY	TOTAL SHEETS	SHEET NO.
57	(28-2)B-2; (28-1)B-2	*	598	390
		CONTRACT NO. 78884		
		ILLINOIS FED. AID PROJECT		

* FRANKLIN/JEFFERSON

FINAL SURVEY		BY	DATE
NOTE BOOK	SURVEYED		
	PLOTTED		
	TEMPLATE		
	AREAS		
NO.	AREAS CHECKED		

ORIGINAL SURVEY		BY	DATE
NOTE BOOK	SURVEYED		
	PLOTTED		
	TEMPLATE		
	AREAS		
NO.	AREAS CHECKED		

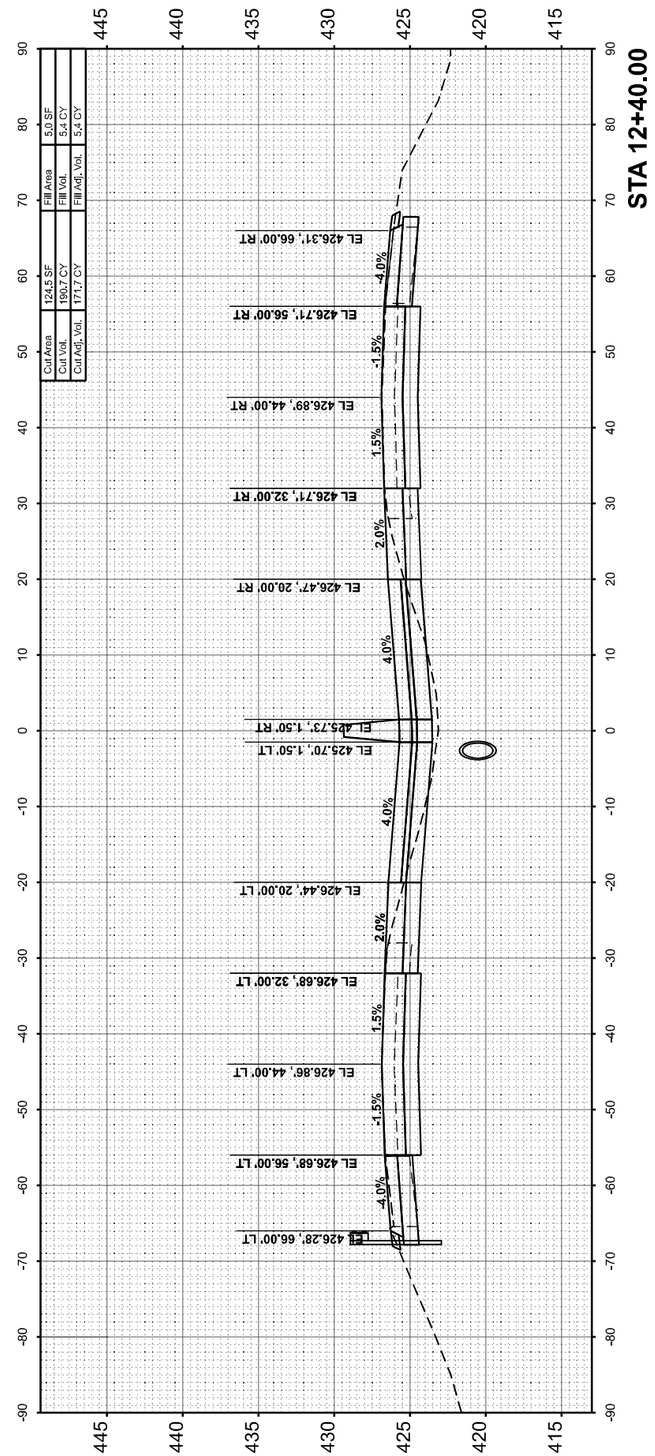

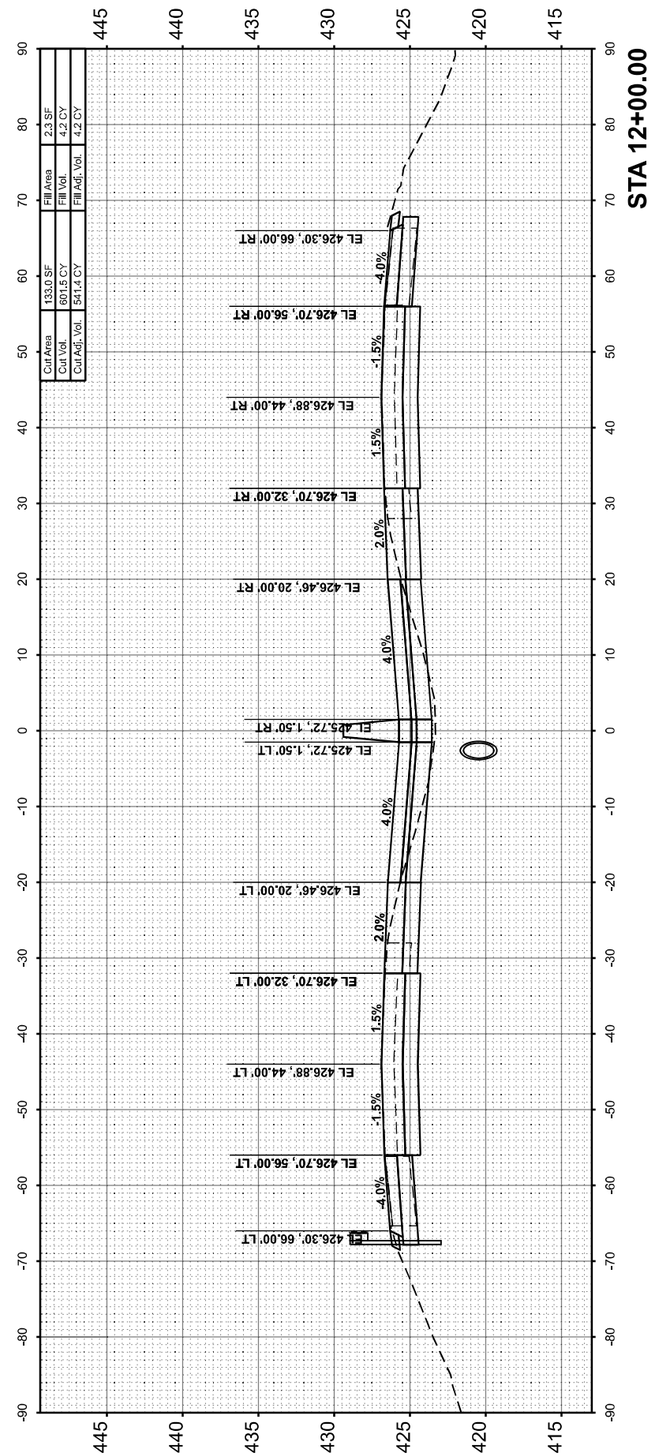

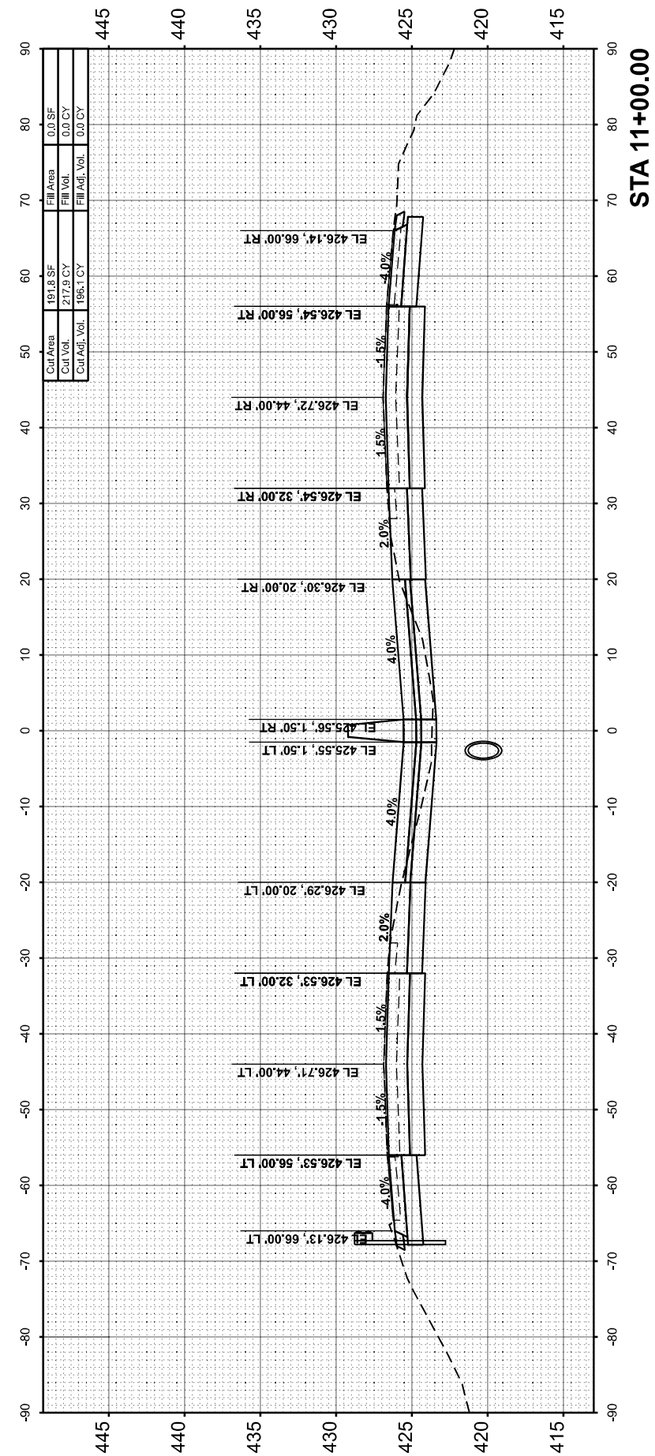

MODEL: IL57FRANKLIN-A - 11+00.00 [Sheet]
FILE NAME: pw://PW01-hornershifrin.com:IS DOT/Documents/21081000\78884\04_DGN/V21081024-57-3rdLanePhy2/CAD_Sheets/D978884-sht\westHrFrankIllu.dgn

HORNER SHIFRIN WWW.HORNERSHIFRIN.COM	USER NAME = bctimmermann	DESIGNED -	REVISED -
		DRAWN -	REVISED -
	PLOT SCALE = 0.16666633 ' / in.	CHECKED -	REVISED -
	PLOT DATE = 10/16/2024	DATE -	REVISED -

STATE OF ILLINOIS
DEPARTMENT OF TRANSPORTATION

CROSS SECTIONS
FRANKLIN COUNTY

SCALE:10 H : 5 V | SHEET 2 OF 121 SHEETS | STA. | TO STA.

F.A.I RTE.	SECTION	COUNTY	TOTAL SHEETS	SHEET NO.
57	(28-2)B-2; (28-1)B-2	*	598	391
		CONTRACT NO. 78884		
		ILLINOIS FED. AID PROJECT		

* FRANKLIN/JEFFERSON

FINAL SURVEY		BY	DATE
NOTE BOOK	SURVEYED		
	PLOTTED		
	TEMPLATE		
	AREAS		
NO.	AREAS CHECKED		

ORIGINAL SURVEY		BY	DATE
NOTE BOOK	SURVEYED		
	PLOTTED		
	TEMPLATE		
	AREAS		
NO.	AREAS CHECKED		

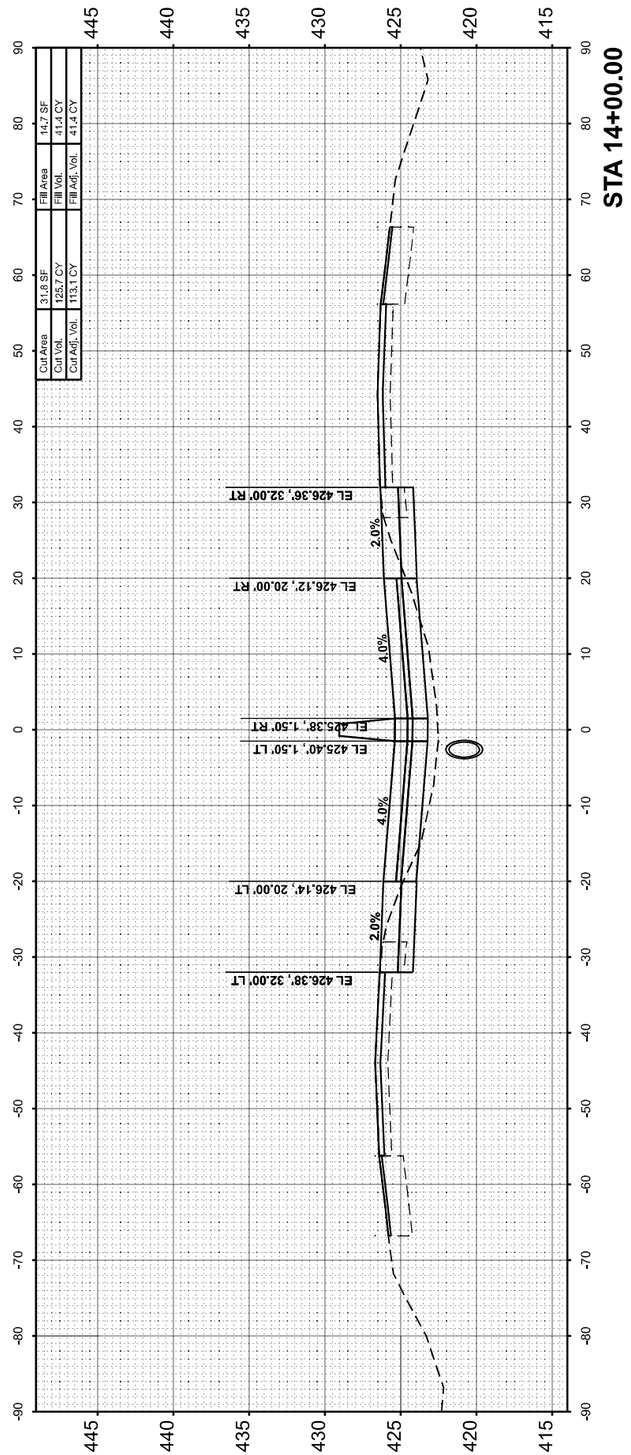

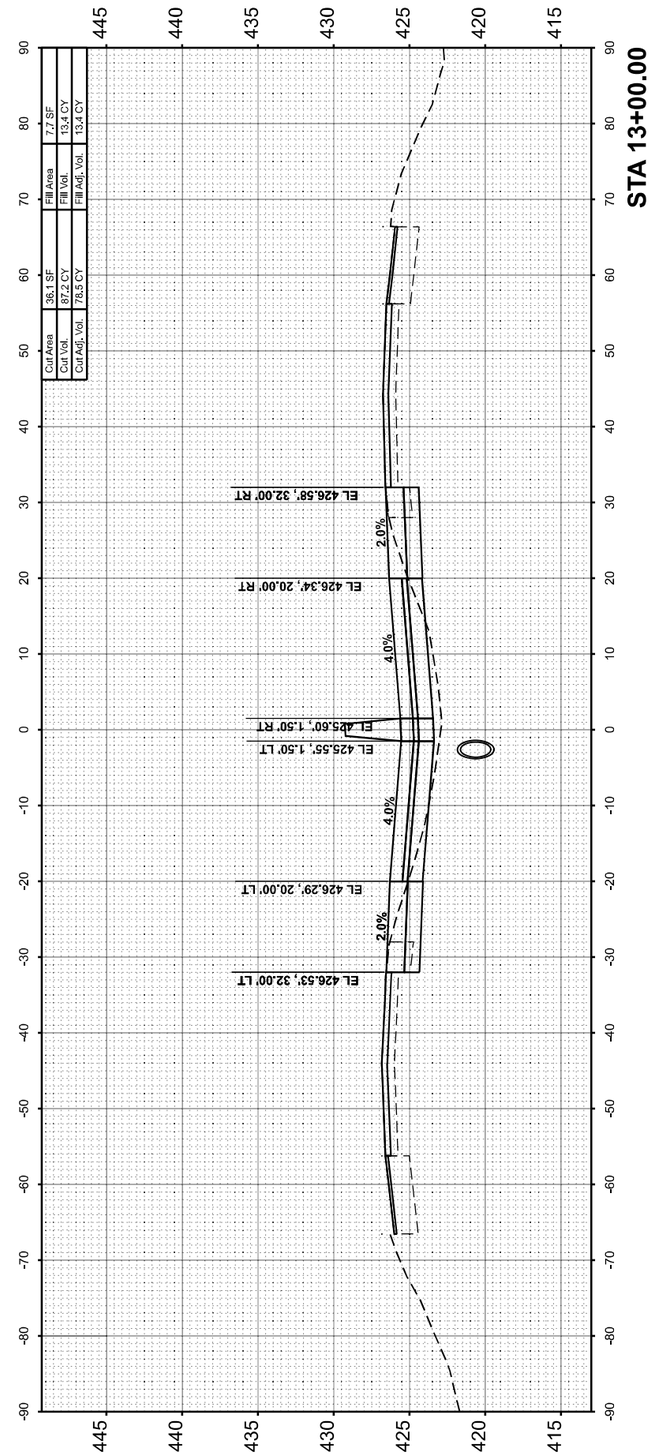

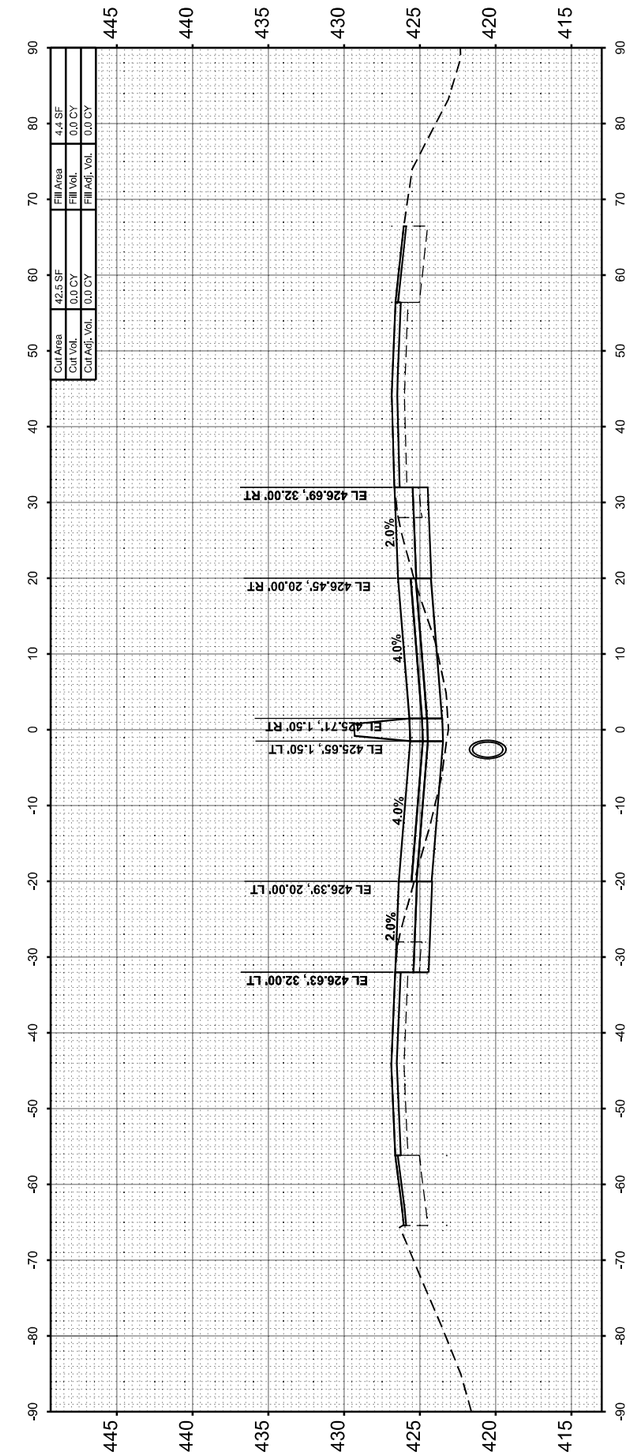

MODEL: I57FRANKLIN - 12+40.01 [Sheet]
FILE NAME: pw://PW01.hornershifrin.com:IS IDOT/Documents/Z10610000-PTB198-034_I57VV/Z10610102-I57-2ndLanePh2/CAD_Sheets/D778884-alt1-xsshfrankfinudgn

HORNER SHIFRIN
WWW. HORNERSHIFRIN .COM

USER NAME = bclimmermann	DESIGNED -	REVISED -
	DRAWN -	REVISED -
PLOT SCALE = 0.16666633 ' / in.	CHECKED -	REVISED -
PLOT DATE = 10/16/2024	DATE -	REVISED -

STATE OF ILLINOIS
DEPARTMENT OF TRANSPORTATION

CROSS SECTIONS
FRANKLIN COUNTY

SCALE:10 H : 5 V | SHEET 3 OF 121 SHEETS | STA. | TO STA.

F.A.I RTE.	SECTION	COUNTY	TOTAL SHEETS	SHEET NO.
57	(28-2)B-2; (28-1)B-2	*	598	392
		CONTRACT NO. 78884		
		ILLINOIS	FED. AID PROJECT	

* FRANKLIN/JEFFERSON

FINAL SURVEY		BY	DATE
NOTE BOOK	SURVEYED		
	PLOTTED		
	TEMPLATE		
	AREAS		
NO.	AREAS CHECKED		

ORIGINAL SURVEY		BY	DATE
NOTE BOOK	SURVEYED		
	PLOTTED		
	TEMPLATE		
	AREAS		
NO.	AREAS CHECKED		

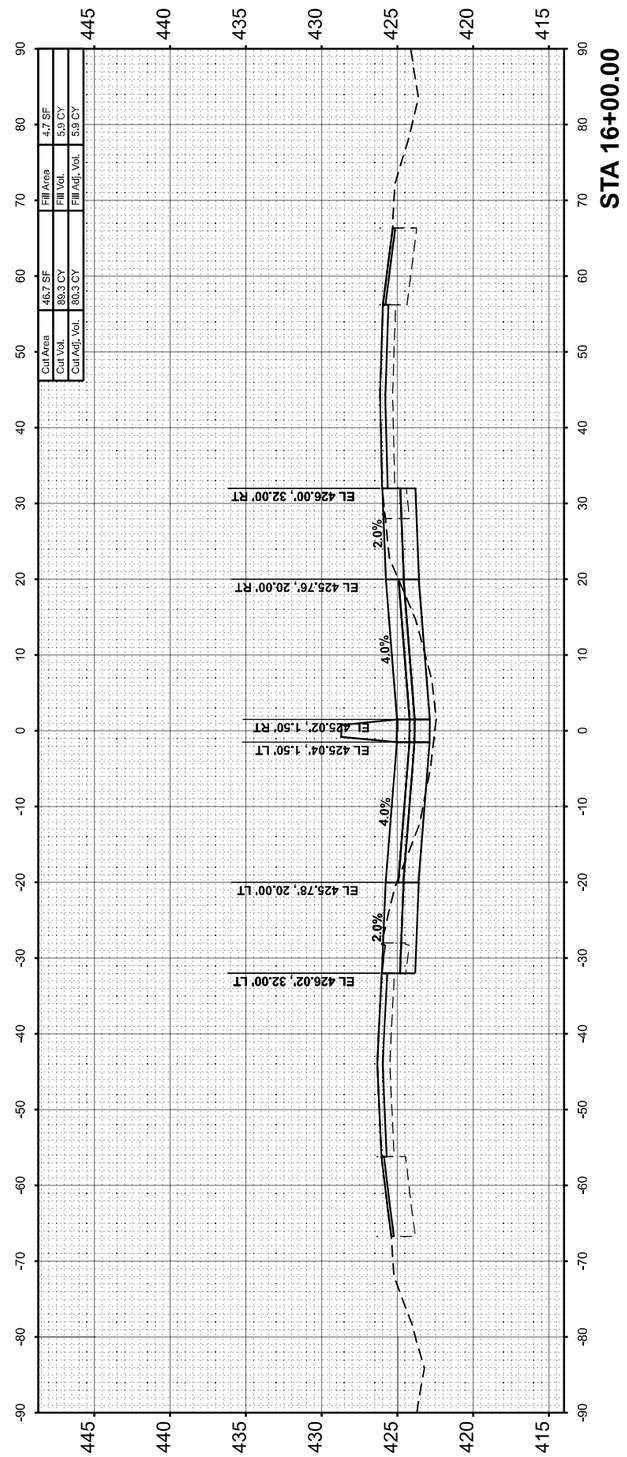

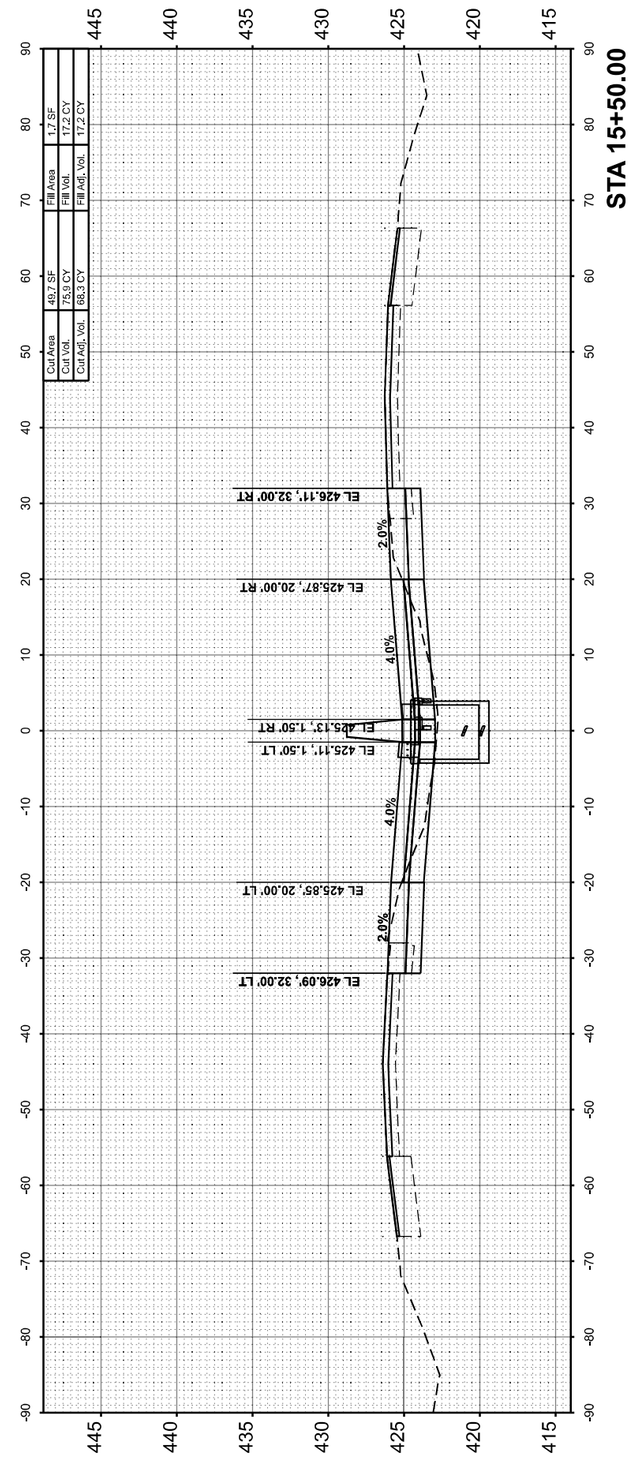

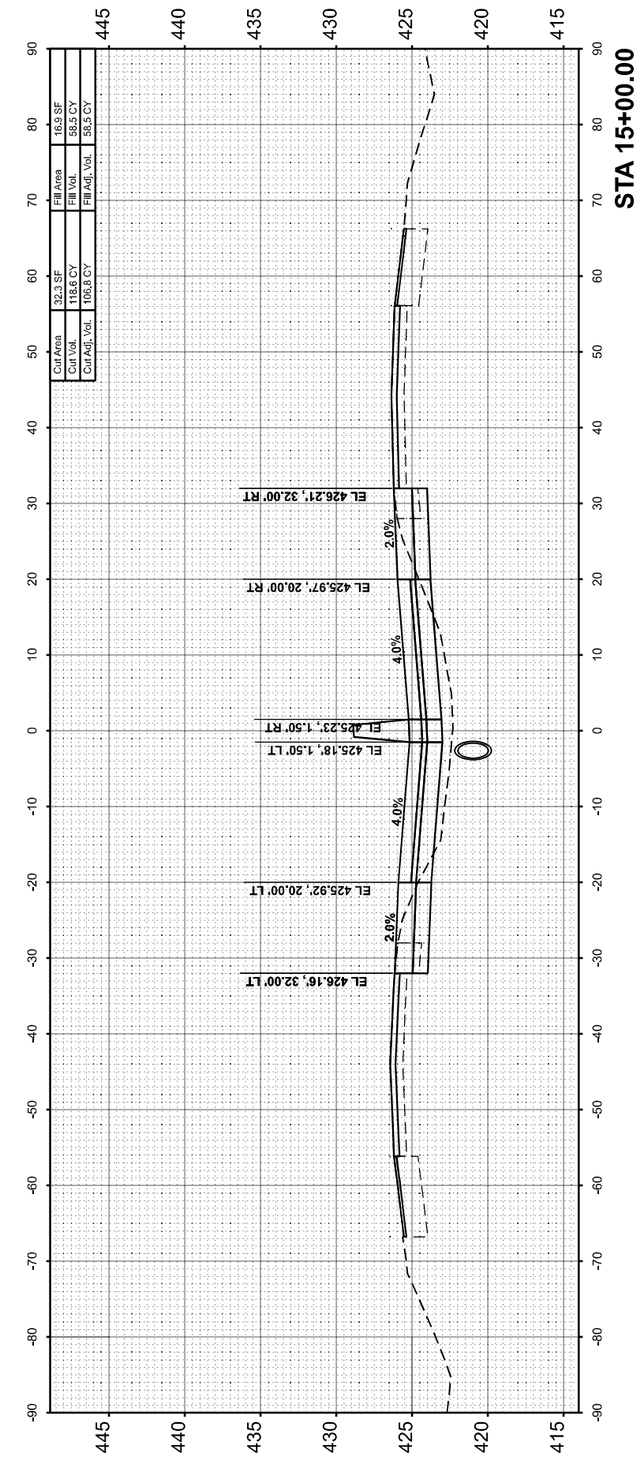

MODEL: IL57FRANKLIN-A - 15+00.00 [Sheet]
FILE NAME: pw://PW01-hornershifrin.com:IS DOT/Documents/21061000\04PTB198-034_D9VV/21061024 57-3rd LanePhy2/CAD_Sheets/D978884-sht\cross sthFranklin.dgn

HORNER SHIFRIN
WWW.HORNERSHIFRIN.COM

USER NAME = bctimmermann	DESIGNED -	REVISED -
	DRAWN -	REVISED -
PLOT SCALE = 0.16666633 ' / in.	CHECKED -	REVISED -
PLOT DATE = 10/16/2024	DATE -	REVISED -

STATE OF ILLINOIS
DEPARTMENT OF TRANSPORTATION

CROSS SECTIONS
FRANKLIN COUNTY

SCALE:10 H : 5 V | SHEET 4 OF 121 SHEETS | STA. | TO STA.

F.A.I RTE.	SECTION	COUNTY	TOTAL SHEETS	SHEET NO.
57	(28-2)B-2; (28-1)B-2	*	598	393
		CONTRACT NO. 78884		
		ILLINOIS FED. AID PROJECT		

* FRANKLIN/JEFFERSON

FINAL SURVEY		BY	DATE
NOTE BOOK	SURVEYED		
	PLOTTED		
	TEMPLATE		
	AREAS		
NO.	AREAS CHECKED		

ORIGINAL SURVEY		BY	DATE
NOTE BOOK	SURVEYED		
	PLOTTED		
	TEMPLATE		
	AREAS		
NO.	AREAS CHECKED		

MODEL: IS7FRANKLIN-A - 17+00.00 [Sheet]
FILE NAME: pw://PW01-hornerspirifrin.com:IS IDOT/Documents/2106100\PTB198\034_D9VV/2108102-57\3rdLanePh2/CAD_Sheets/D978884-sht\westbrFrankBridge.dgn

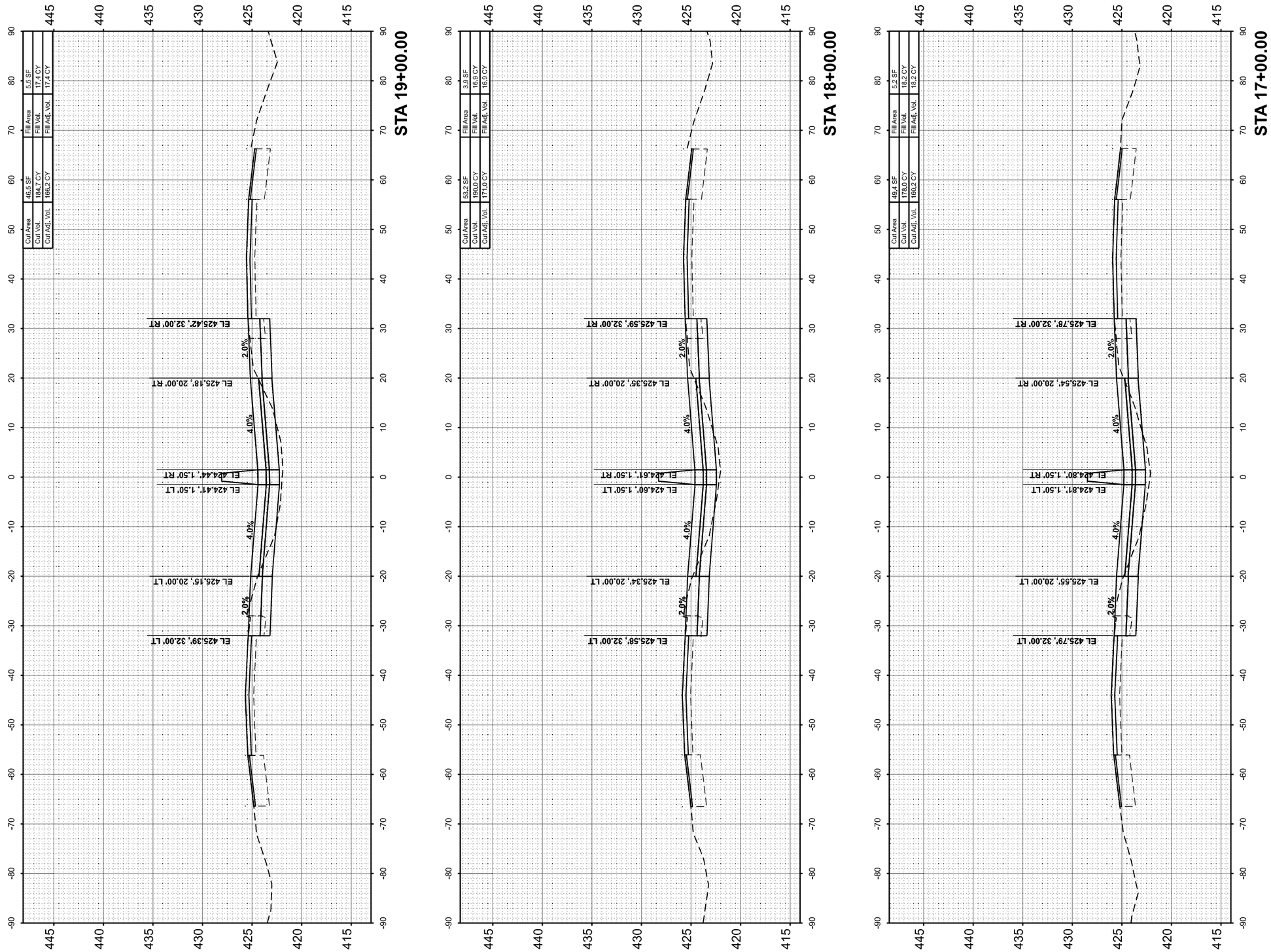

HORNER SHIFRIN
WWW.HORNERSHIFRIN.COM

USER NAME = bclimmermann	DESIGNED -	REVISED -	
	DRAWN -	REVISED -	
PLOT SCALE = 0.16666633 ' / in.	CHECKED -	REVISED -	
PLOT DATE = 10/16/2024	DATE -	REVISED -	

STATE OF ILLINOIS
DEPARTMENT OF TRANSPORTATION

CROSS SECTIONS
FRANKLIN COUNTY

SCALE:10 H : 5 V | SHEET 5 OF 121 SHEETS | STA. TO STA.

F.A.I RTE.	SECTION	COUNTY	TOTAL SHEETS	SHEET NO.
57	(28-2)B-2; (28-1)B-2	*	598	394

CONTRACT NO. 78884

ILLINOIS | FED. AID PROJECT

* FRANKLIN/JEFFERSON

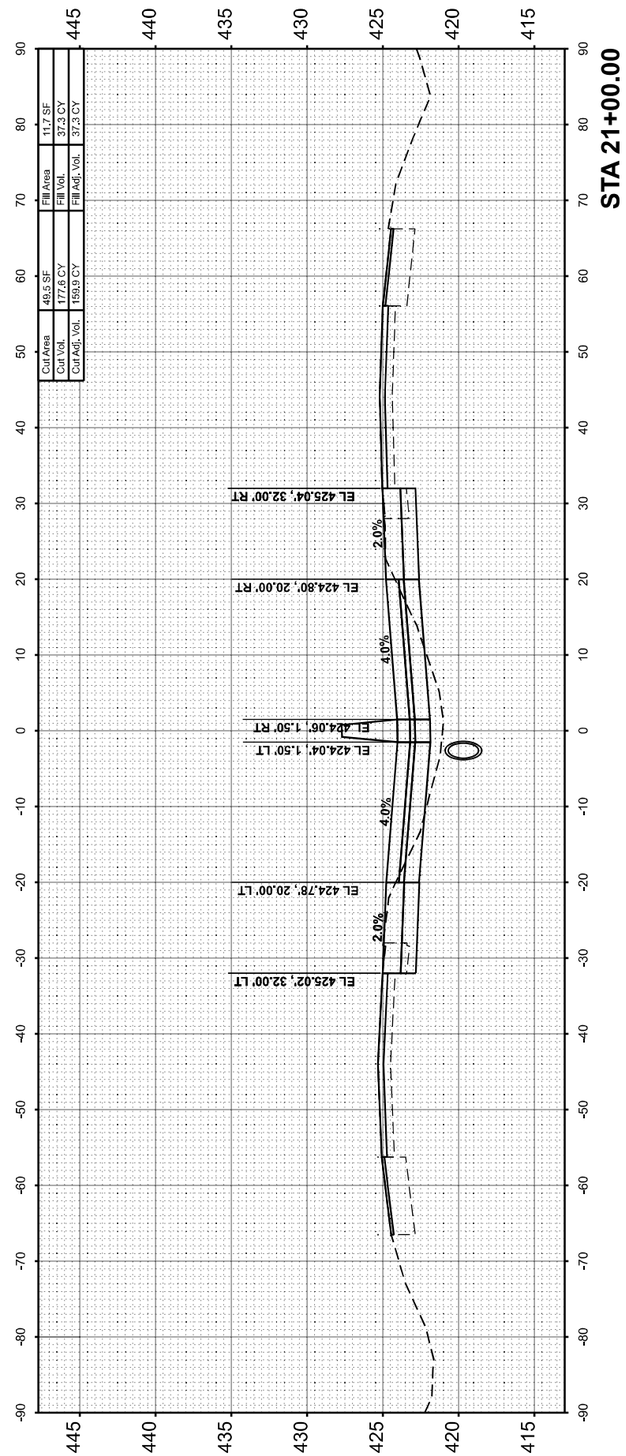

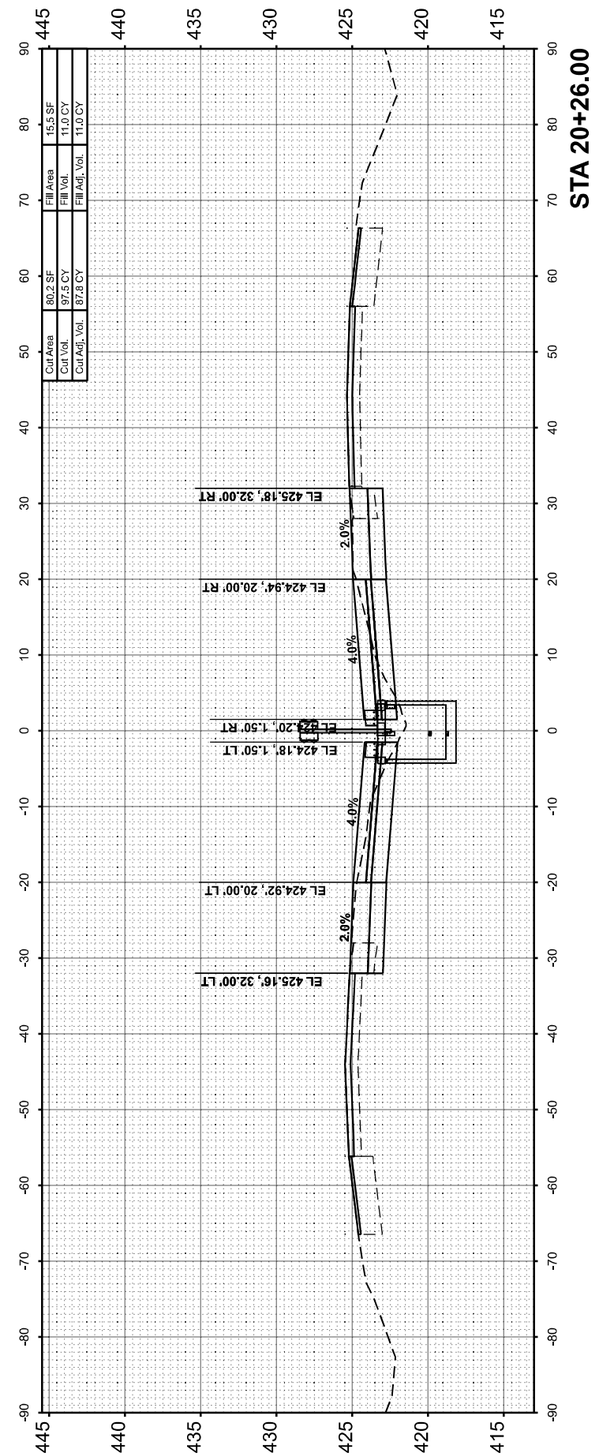

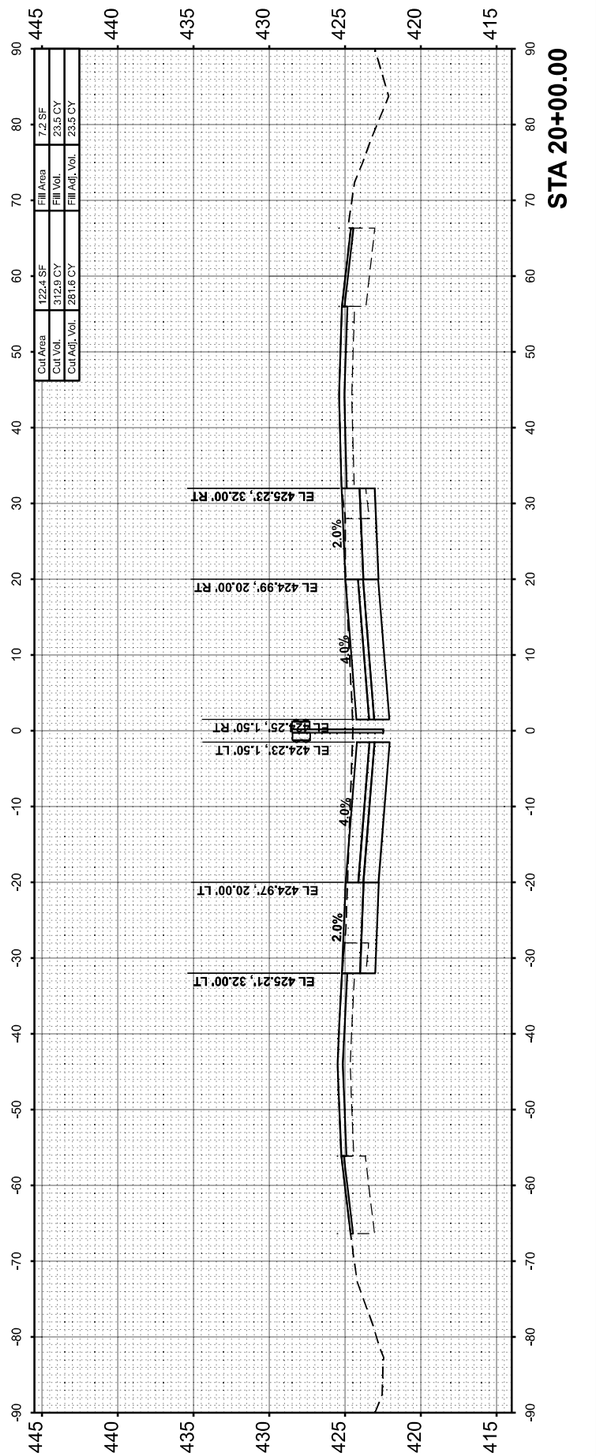

FINAL SURVEY		BY	DATE
NOTE BOOK NO.	SURVEYED		
	PLOTTED		
	TEMPLATE		
	AREAS		
	AREAS CHECKED		

ORIGINAL SURVEY		BY	DATE
NOTE BOOK NO.	SURVEYED		
	PLOTTED		
	TEMPLATE		
	AREAS		
	AREAS CHECKED		

MODEL: IL57FRANKLIN-A - 20+00.00 [Sheet]
FILE NAME: pw://PW01.hornershifrin.com:IS\DOT\Documents\21081000\PTB198-034_D9\W\21081\2-457-3rd\LandPro\2\CAD_Sheets\D978884-sht\westbrFrankIllu.dgn

HORNER SHIFRIN
WWW.HORNERSHIFRIN.COM

USER NAME = bctimmermann	DESIGNED -	REVISED -	
	DRAWN -	REVISED -	
PLOT SCALE = 0.16666633 ' / in.	CHECKED -	REVISED -	
PLOT DATE = 10/16/2024	DATE -	REVISED -	

STATE OF ILLINOIS
DEPARTMENT OF TRANSPORTATION

CROSS SECTIONS
FRANKLIN COUNTY

SCALE:10 H : 5 V | SHEET 6 OF 121 SHEETS | STA. | TO STA.

F.A.I RTE.	SECTION	COUNTY	TOTAL SHEETS	SHEET NO.
57	(28-2)B-2; (28-1)B-2	*	598	395
		CONTRACT NO. 78884		
		ILLINOIS	FED. AID PROJECT	

* FRANKLIN/JEFFERSON

FINAL SURVEY		BY	DATE
NOTE BOOK	SURVEYED		
	PLOTTED		
	TEMPLATE		
	AREAS		
NO.	AREAS CHECKED		

ORIGINAL SURVEY		BY	DATE
NOTE BOOK	SURVEYED		
	PLOTTED		
	TEMPLATE		
	AREAS		
NO.	AREAS CHECKED		

MODEL: I57FRANKLIN-+22+00.00 [Sheet]
FILE NAME: pw://PW01.hornershifrin.com:IS IDOT/Documents/Z108610000-PTB198-034_D97V/Z108102-57-2rdLane/Ph2/CAD_Sheets/D978884-sht-xsects/franklin.dgn

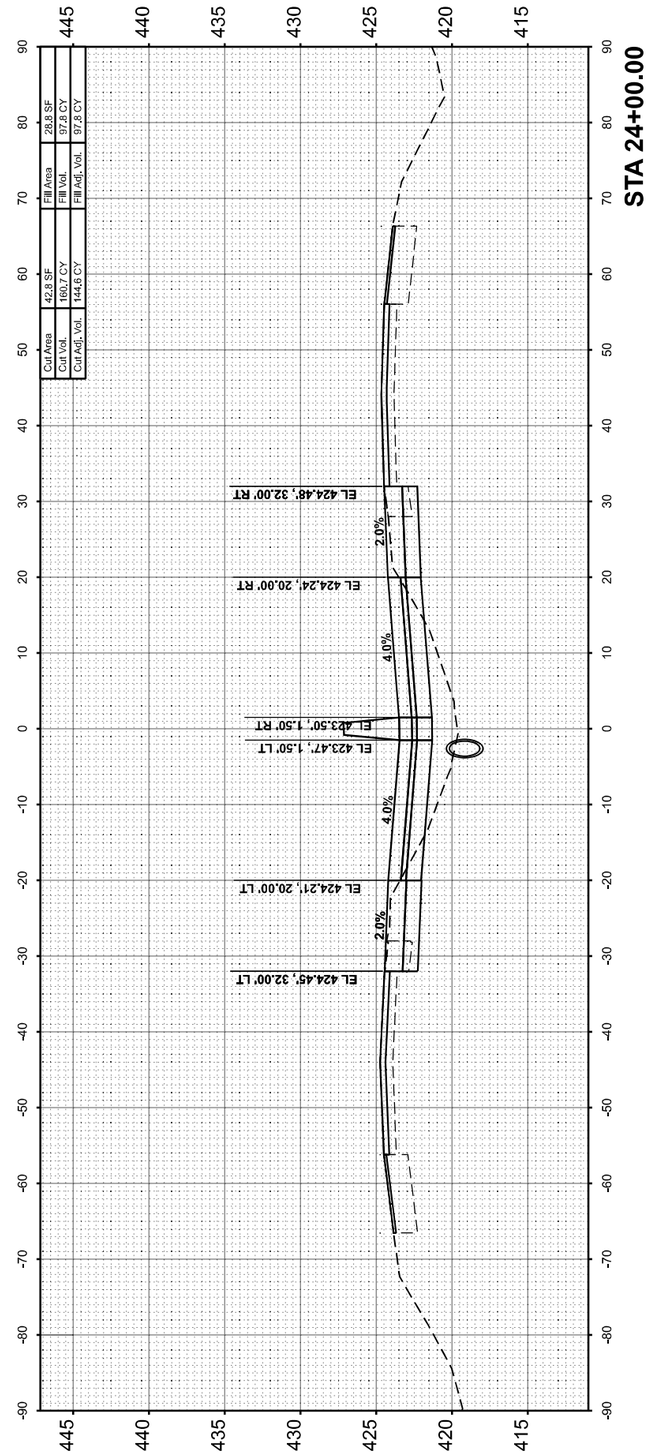

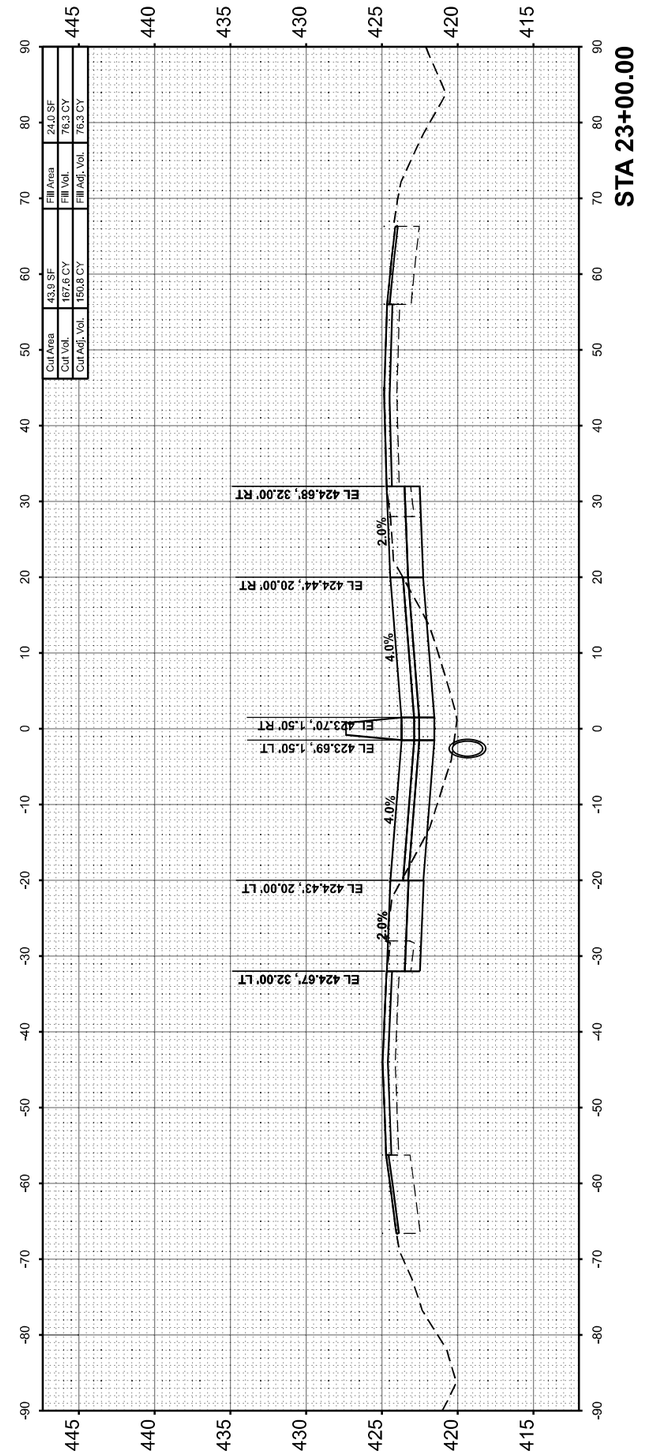

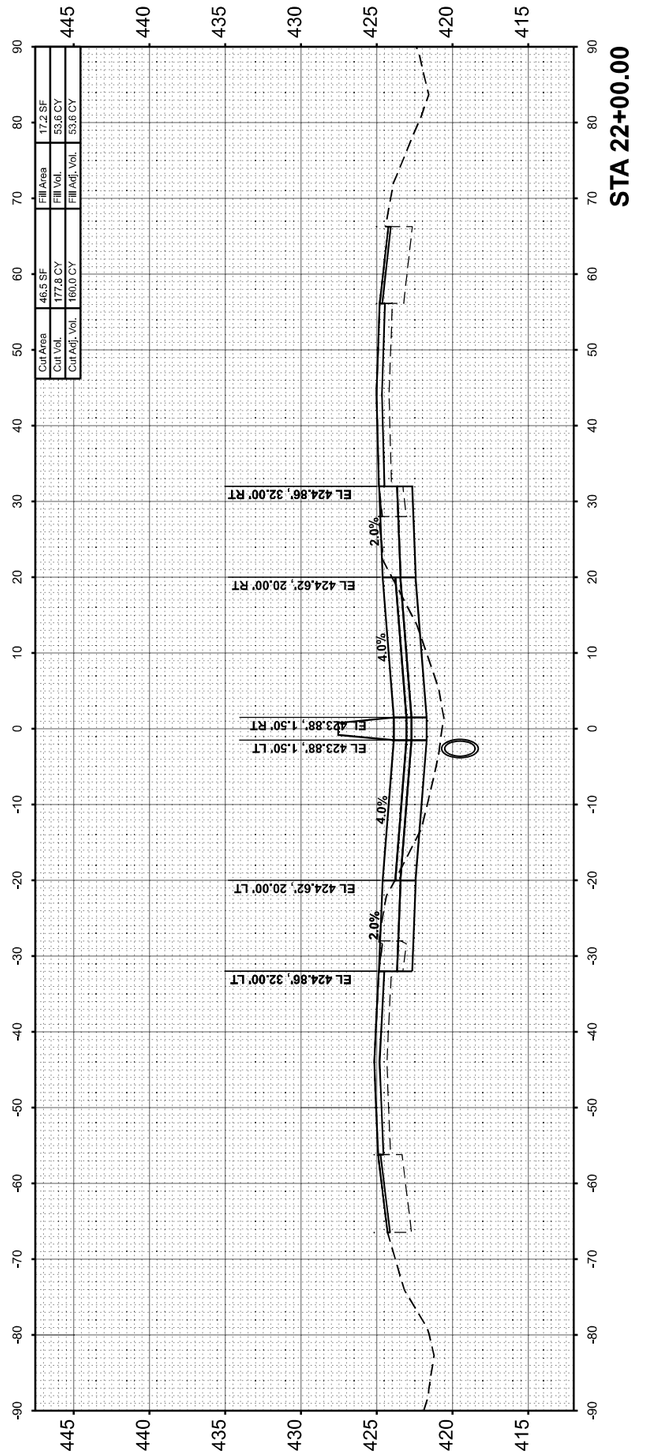

HORNER SHIFRIN
WWW. HORNERSHIFRIN .COM

USER NAME = bclimmermann	DESIGNED -	REVISED -	
	DRAWN -	REVISED -	
PLOT SCALE = 0.16666633 ' / in.	CHECKED -	REVISED -	
PLOT DATE = 10/16/2024	DATE -	REVISED -	

STATE OF ILLINOIS
DEPARTMENT OF TRANSPORTATION

CROSS SECTIONS
FRANKLIN COUNTY

SCALE:10 H : 5 V | SHEET 7 OF 121 SHEETS | STA. TO STA.

F.A.I RTE.	SECTION	COUNTY	TOTAL SHEETS	SHEET NO.
57	(28-2)B-2; (28-1)B-2	*	598	396
		CONTRACT NO. 78884		
	ILLINOIS	FED. AID PROJECT		

* FRANKLIN/JEFFERSON

FINAL SURVEY		BY	DATE
NOTE BOOK NO.	SURVEYED		
	PLOTTED		
	TEMPLATE		
	AREAS		
	AREAS CHECKED		

ORIGINAL SURVEY		BY	DATE
NOTE BOOK NO.	SURVEYED		
	PLOTTED		
	TEMPLATE		
	AREAS		
	AREAS CHECKED		

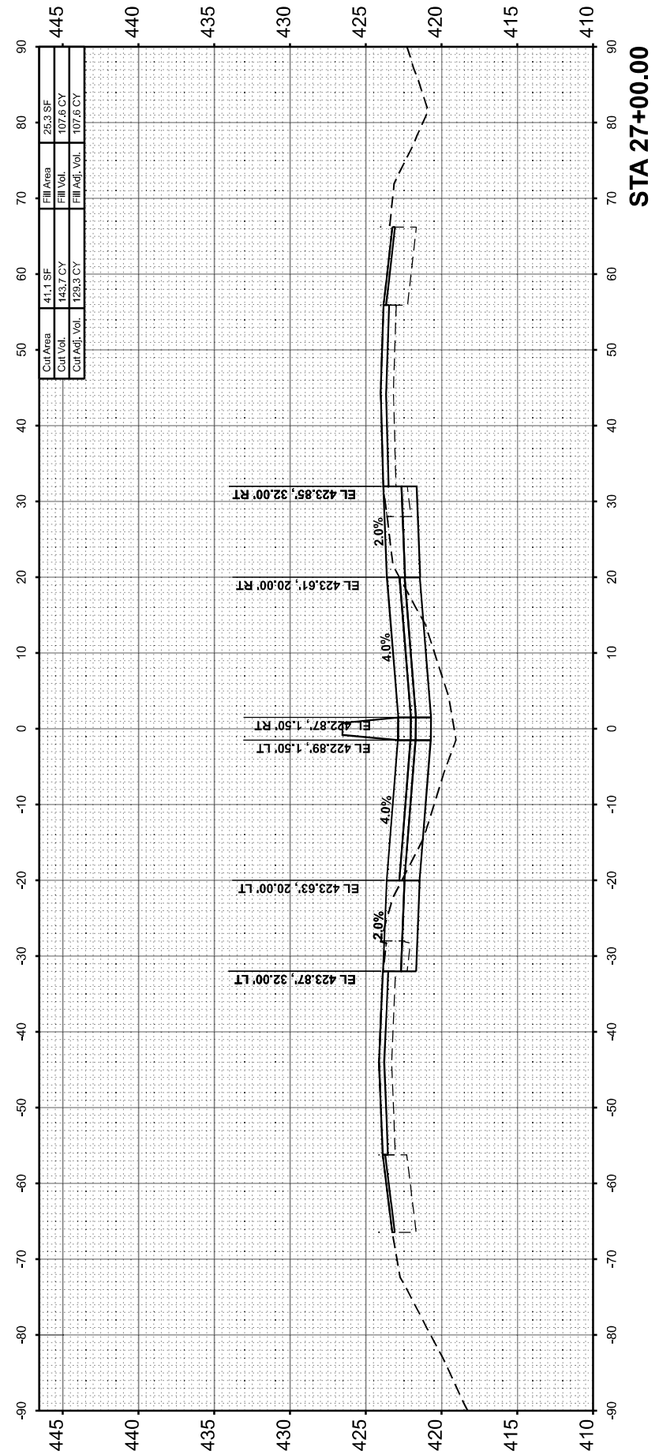

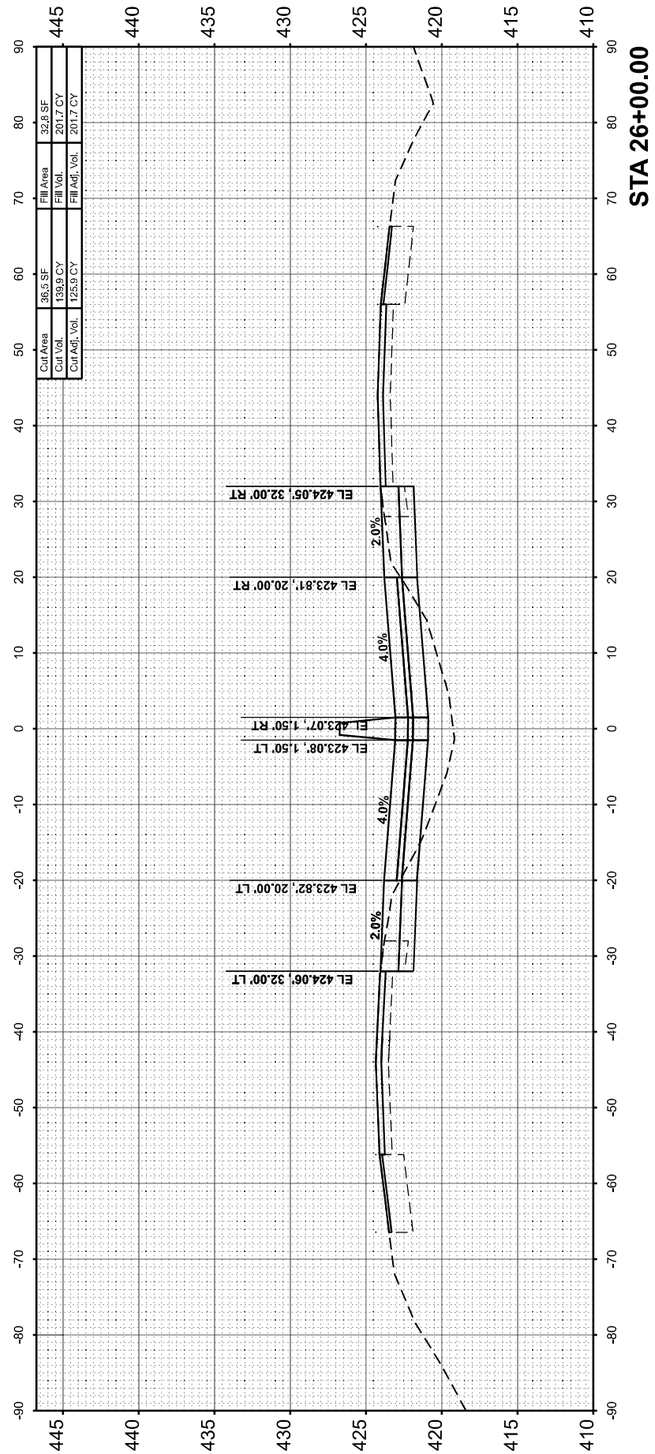

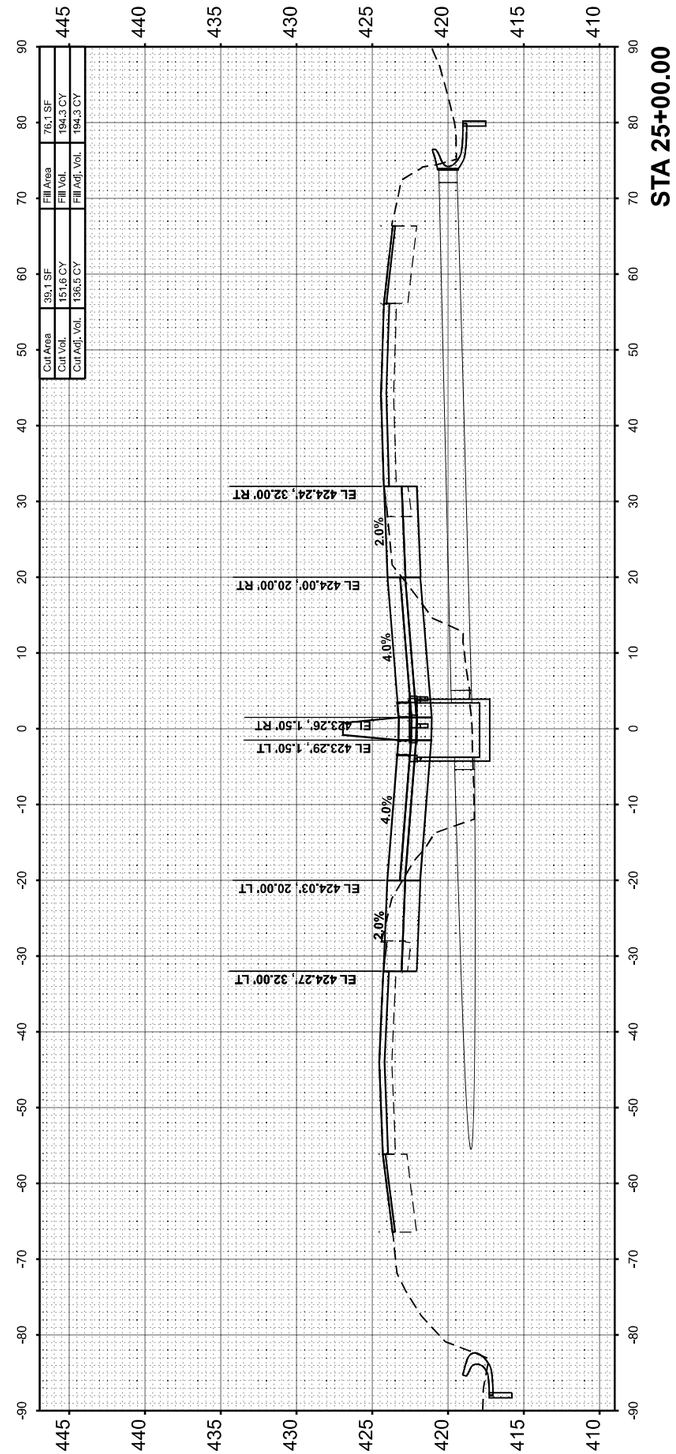

MODEL: I57FRANKLIN-x_25+00.00 (Sheet)
FILE NAME: pw://PWI\Hornershifrin.com\IS IDOT\Documents\21061000\PTB194\034_D97V\21081102-I57-2\ctl\LinePlh2\CAD_Sheets\D978984-ctl-lwestbd-franklin.dgn

HORNER SHIFRIN
WWW. HORNERSHIFRIN .COM

USER NAME = bctimmermann	DESIGNED -	REVISED -
	DRAWN -	REVISED -
PLOT SCALE = 0.16666633 ' / in.	CHECKED -	REVISED -
PLOT DATE = 10/16/2024	DATE -	REVISED -

STATE OF ILLINOIS
DEPARTMENT OF TRANSPORTATION

CROSS SECTIONS
FRANKLIN COUNTY

SCALE:10 H : 5 V | SHEET 8 OF 121 SHEETS | STA. TO STA.

F.A.I RTE.	SECTION	COUNTY	TOTAL SHEETS	SHEET NO.
57	(28-2)B-2; (28-1)B-2	*	598	397
		CONTRACT NO. 78884		
	ILLINOIS	FED. AID PROJECT		

* FRANKLIN/JEFFERSON

FINAL SURVEY		BY	DATE
NOTE BOOK	SURVEYED		
	PLOTTED		
	TEMPLATE		
	AREAS		
NO.	AREAS CHECKED		

ORIGINAL SURVEY		BY	DATE
NOTE BOOK	SURVEYED		
	PLOTTED		
	TEMPLATE		
	AREAS		
NO.	AREAS CHECKED		

MODEL: I57FRANKLIN-A - 28+00.00 [Sheet]
FILE NAME: pw://PW01.hornershifrin.com:IS EQ01/Documents/Z106\1000\4PTB19B4\D4_D9VV/Z106112\457-2rdLane\Ph2/CAD_Sheets\D978884-alt\ness\h4rank\ku\dgn

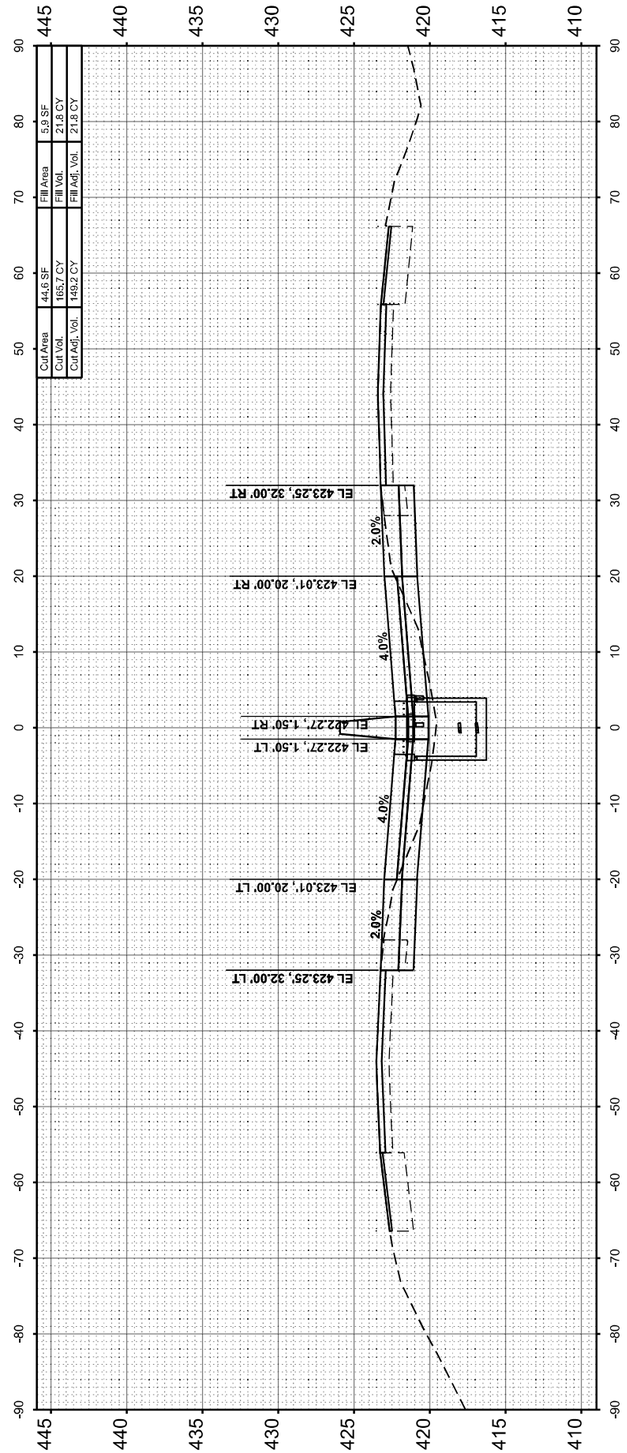

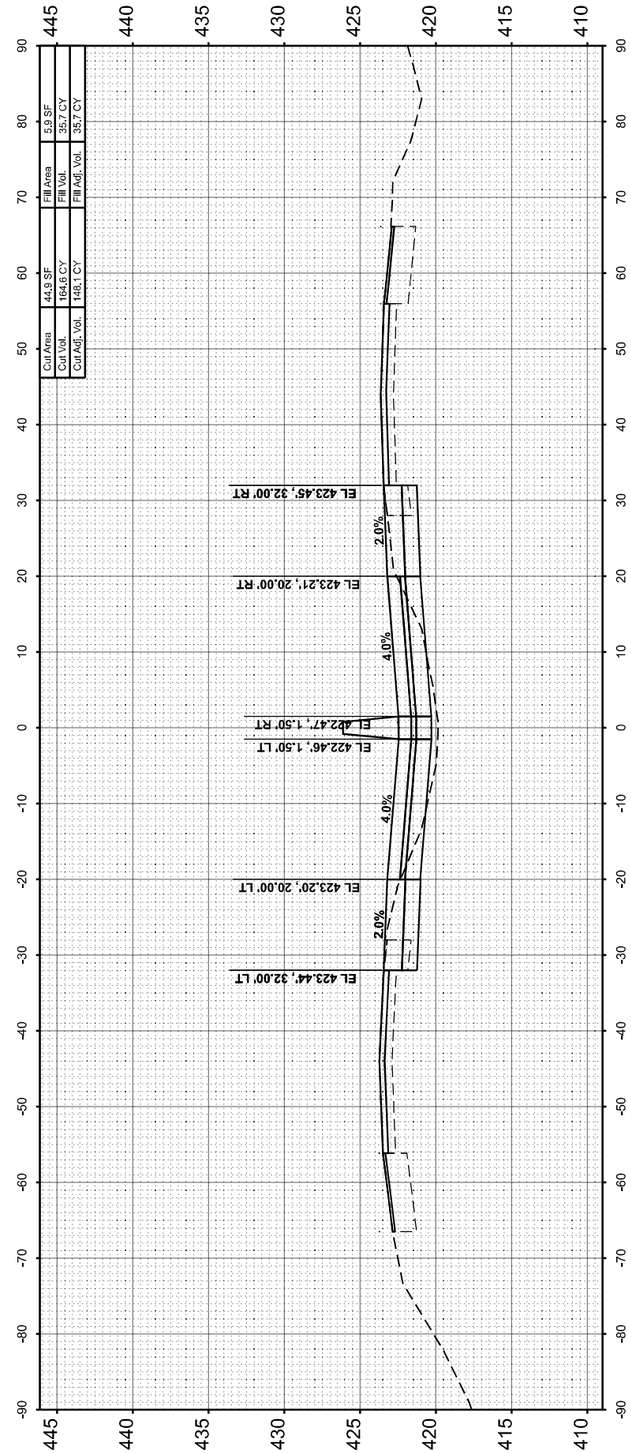

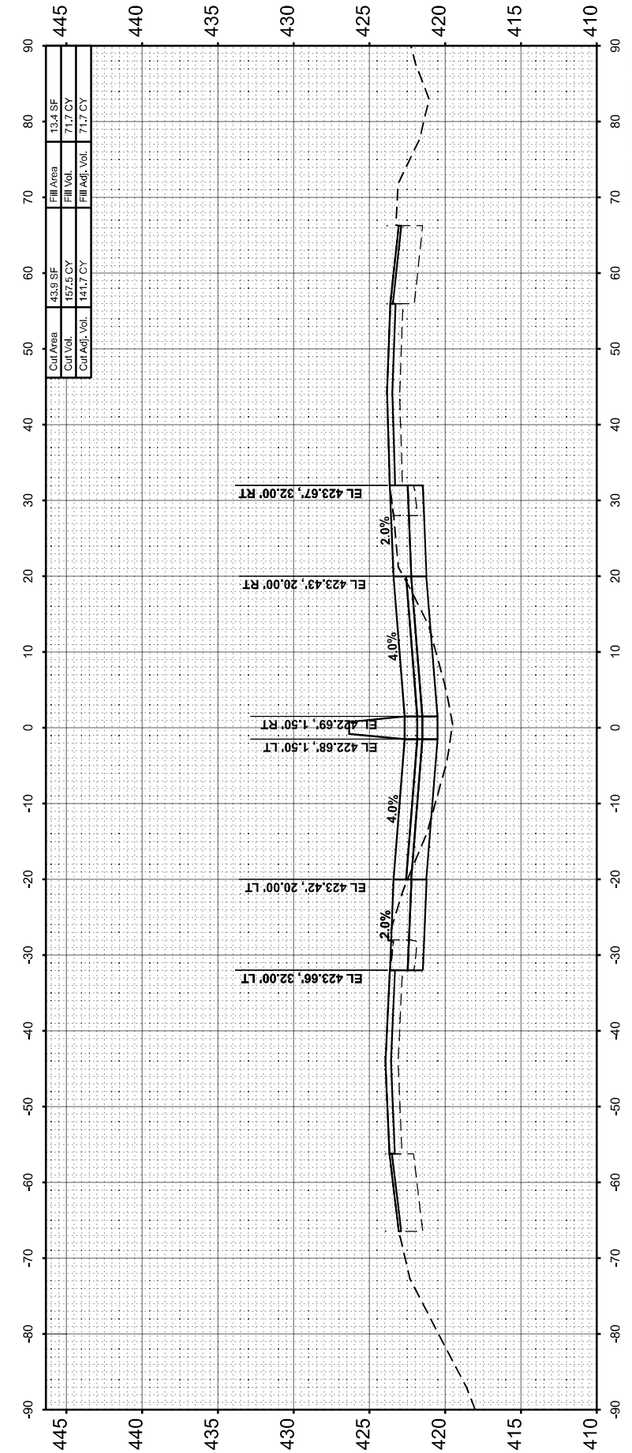

HORNER SHIFRIN
WWW.HORNERSHIFRIN.COM

USER NAME = bclimmermann	DESIGNED -	REVISED -	
	DRAWN -	REVISED -	
PLOT SCALE = 0.16666633 ' / in.	CHECKED -	REVISED -	
PLOT DATE = 10/16/2024	DATE -	REVISED -	

STATE OF ILLINOIS
DEPARTMENT OF TRANSPORTATION

CROSS SECTIONS
FRANKLIN COUNTY

SCALE:10 H : 5 V | SHEET 9 OF 121 SHEETS | STA. TO STA.

F.A.I RTE.	SECTION	COUNTY	TOTAL SHEETS	SHEET NO.
57	(28-2)B-2; (28-1)B-2	*	598	398

CONTRACT NO. 78884

ILLINOIS | FED. AID PROJECT

* FRANKLIN/JEFFERSON

FINAL SURVEY		BY	DATE
NOTE BOOK	SURVEYED		
	PLOTTED		
	TEMPLATE		
	AREAS		
NO.	AREAS CHECKED		

ORIGINAL SURVEY		BY	DATE
NOTE BOOK	SURVEYED		
	PLOTTED		
	TEMPLATE		
	AREAS		
NO.	AREAS CHECKED		

MODEL: I57FRANKLIN a 31+00.00 [Sheet]
FILE NAME: pw://PWI1.hornershifrin.com:IS IDOT/Documents/21061000-PTB194-034_D97V/21081102-457-2-rdt.LanePh2/CAD_Sheets/D978884-sht-xs-alt-hwy-alt-franklin.dgn

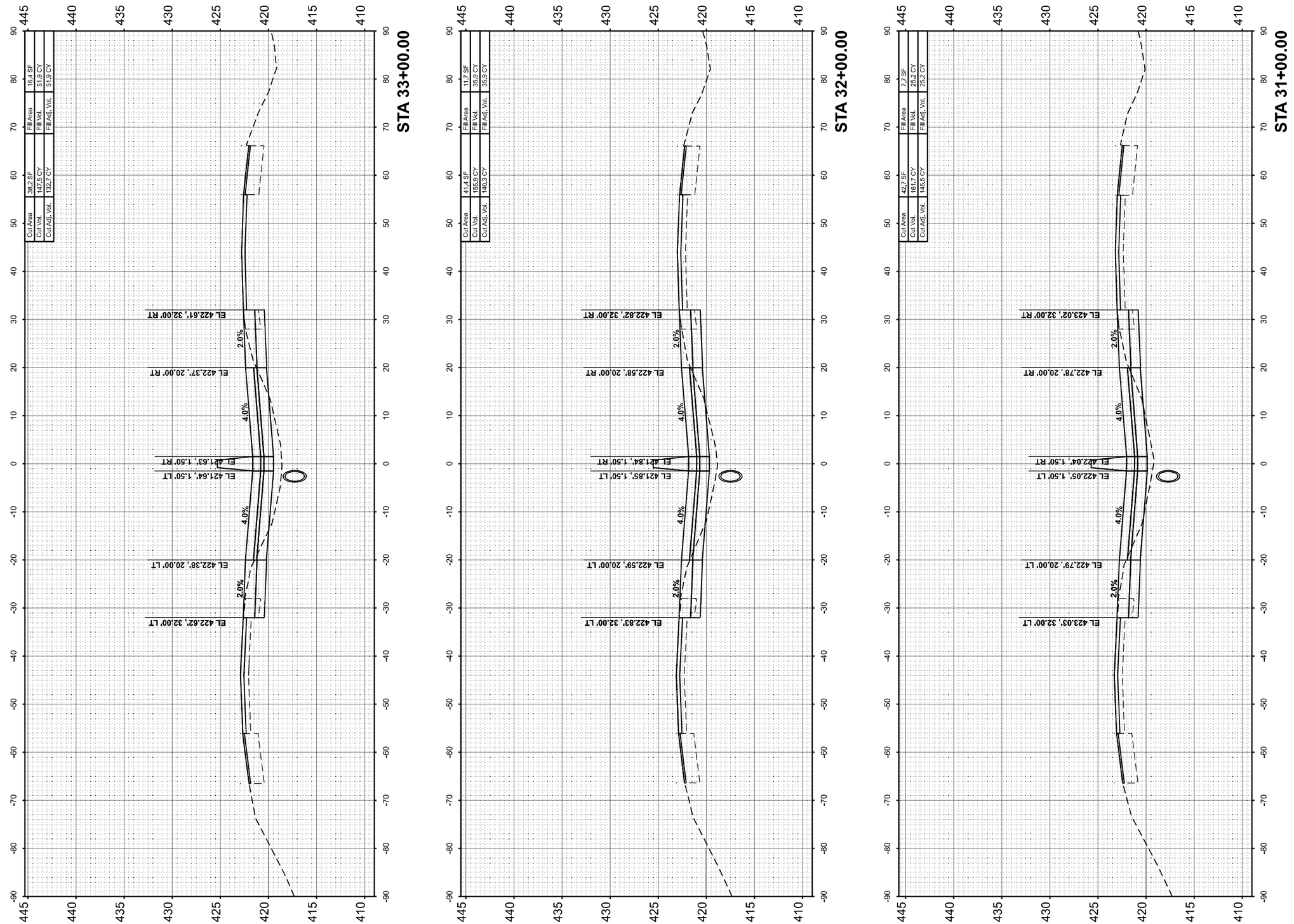

HORNER SHIFRIN
WWW. HORNERSHIFRIN .COM

USER NAME = bclimmermann	DESIGNED -	REVISED -
	DRAWN -	REVISED -
PLOT SCALE = 0.16666633 ' / In.	CHECKED -	REVISED -
PLOT DATE = 10/16/2024	DATE -	REVISED -

STATE OF ILLINOIS
DEPARTMENT OF TRANSPORTATION

CROSS SECTIONS
FRANKLIN COUNTY

SCALE:10 H : 5 V | SHEET 10 OF 121 SHEETS | STA. TO STA.

F.A.I RTE.	SECTION	COUNTY	TOTAL SHEETS	SHEET NO.
57	(28-2)B-2; (28-1)B-2	*	598	399

CONTRACT NO. 78884

ILLINOIS | FED. AID PROJECT

* FRANKLIN/JEFFERSON

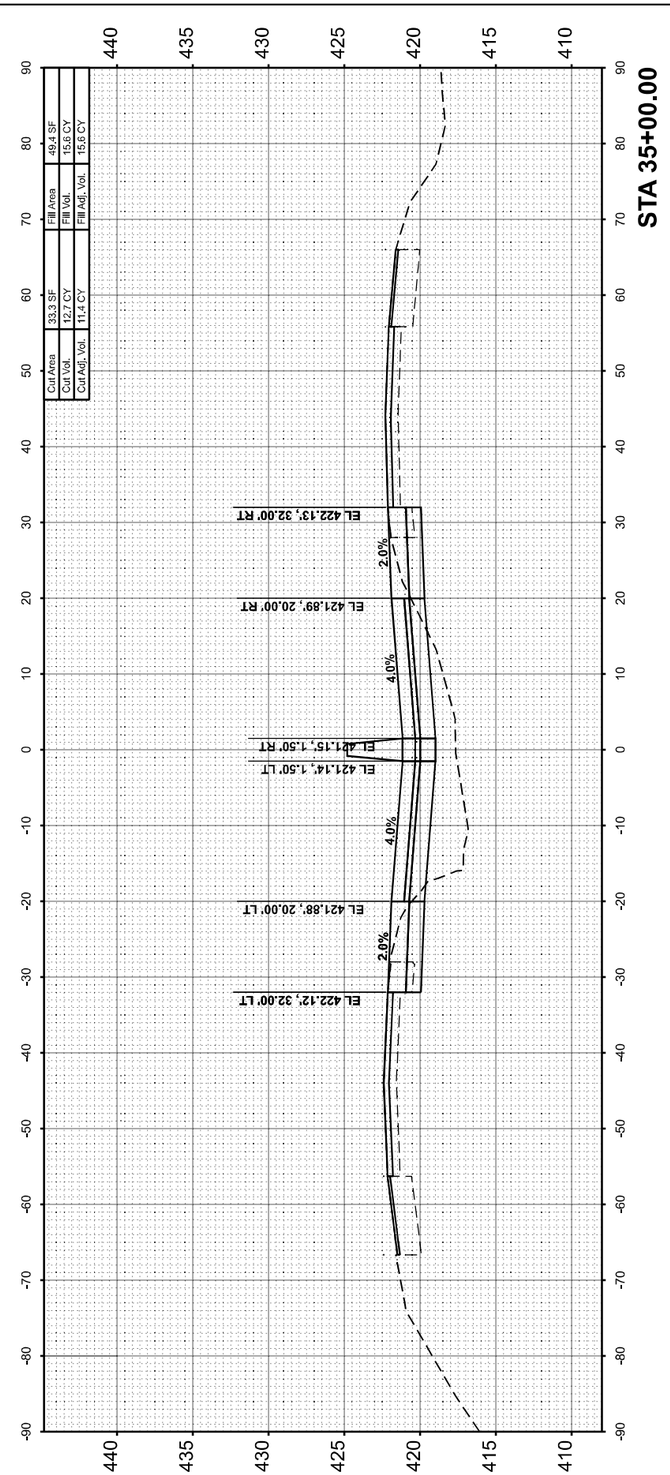

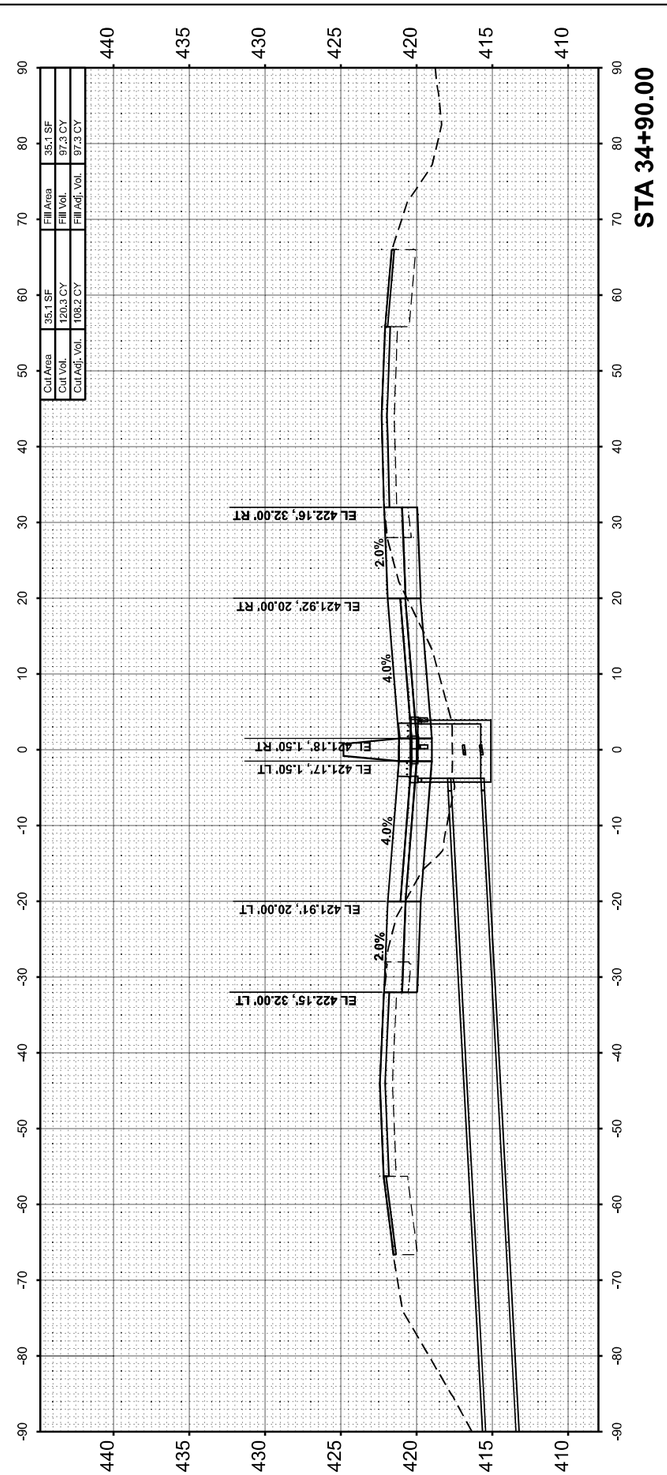

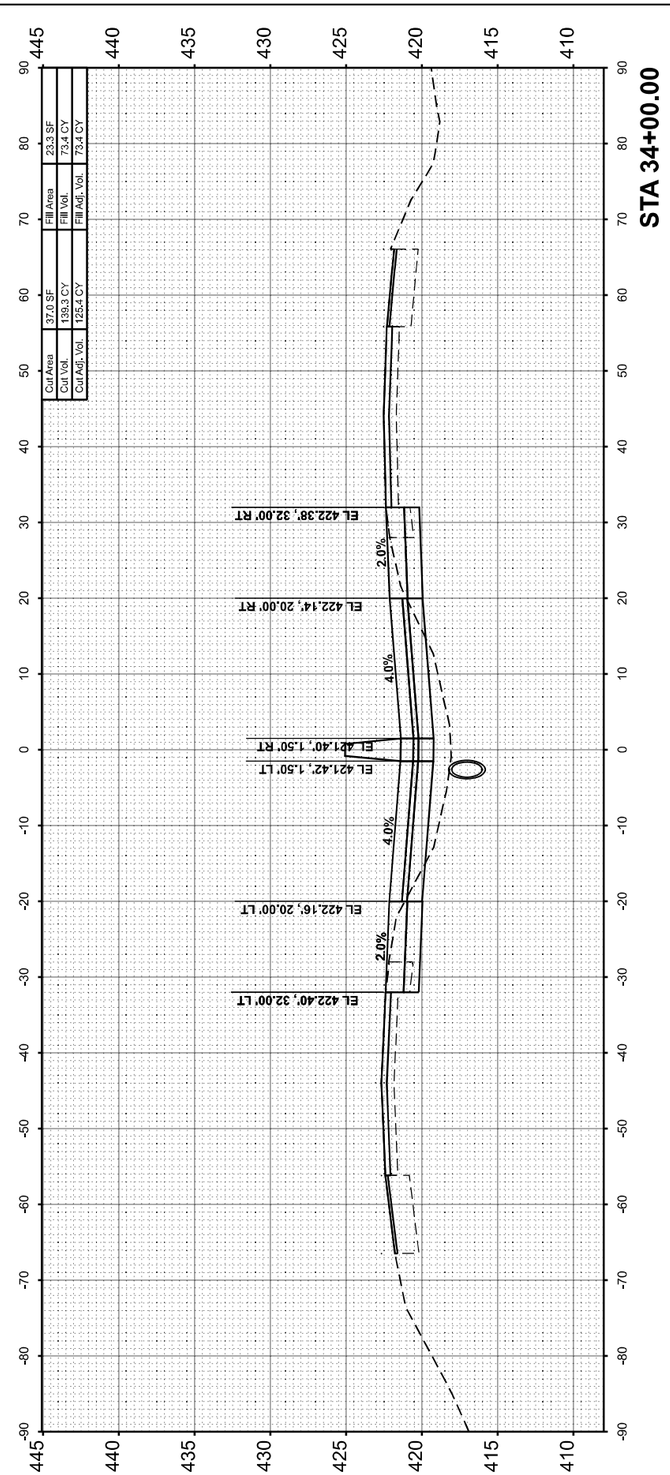

FINAL SURVEY		BY	DATE
NOTE BOOK	SURVEYED		
	PLOTTED		
	TEMPLATE		
	AREAS		
NO.	AREAS CHECKED		

ORIGINAL SURVEY		BY	DATE
NOTE BOOK	SURVEYED		
	PLOTTED		
	TEMPLATE		
	AREAS		
NO.	AREAS CHECKED		

MODEL: IL57FRANKLIN-A - 34+00.00 [Sheet]
FILE NAME: pw:\\PWD1.hornershifrin.com:IS IDOT\Documents\21061000\PTB198-034_D9\W\21061\2-457-3rdLanePh2\CAD_Sheets\D978884-sht\westbFrankIllu.dgn

HORNER SHIFRIN WWW.HORNERSHIFRIN.COM	USER NAME = bctimmermann	DESIGNED -	REVISED -
		DRAWN -	REVISED -
	PLOT SCALE = 0.16666633 ' / in.	CHECKED -	REVISED -
	PLOT DATE = 10/16/2024	DATE -	REVISED -

STATE OF ILLINOIS
DEPARTMENT OF TRANSPORTATION

CROSS SECTIONS
FRANKLIN COUNTY

SCALE:10 H : 5 V | SHEET 11 OF 121 SHEETS | STA. | TO STA.

F.A.I RTE.	SECTION	COUNTY	TOTAL SHEETS	SHEET NO.
57	(28-2)B-2; (28-1)B-2	*	598	400
		CONTRACT NO. 78884		
		ILLINOIS	FED. AID PROJECT	

* FRANKLIN/JEFFERSON