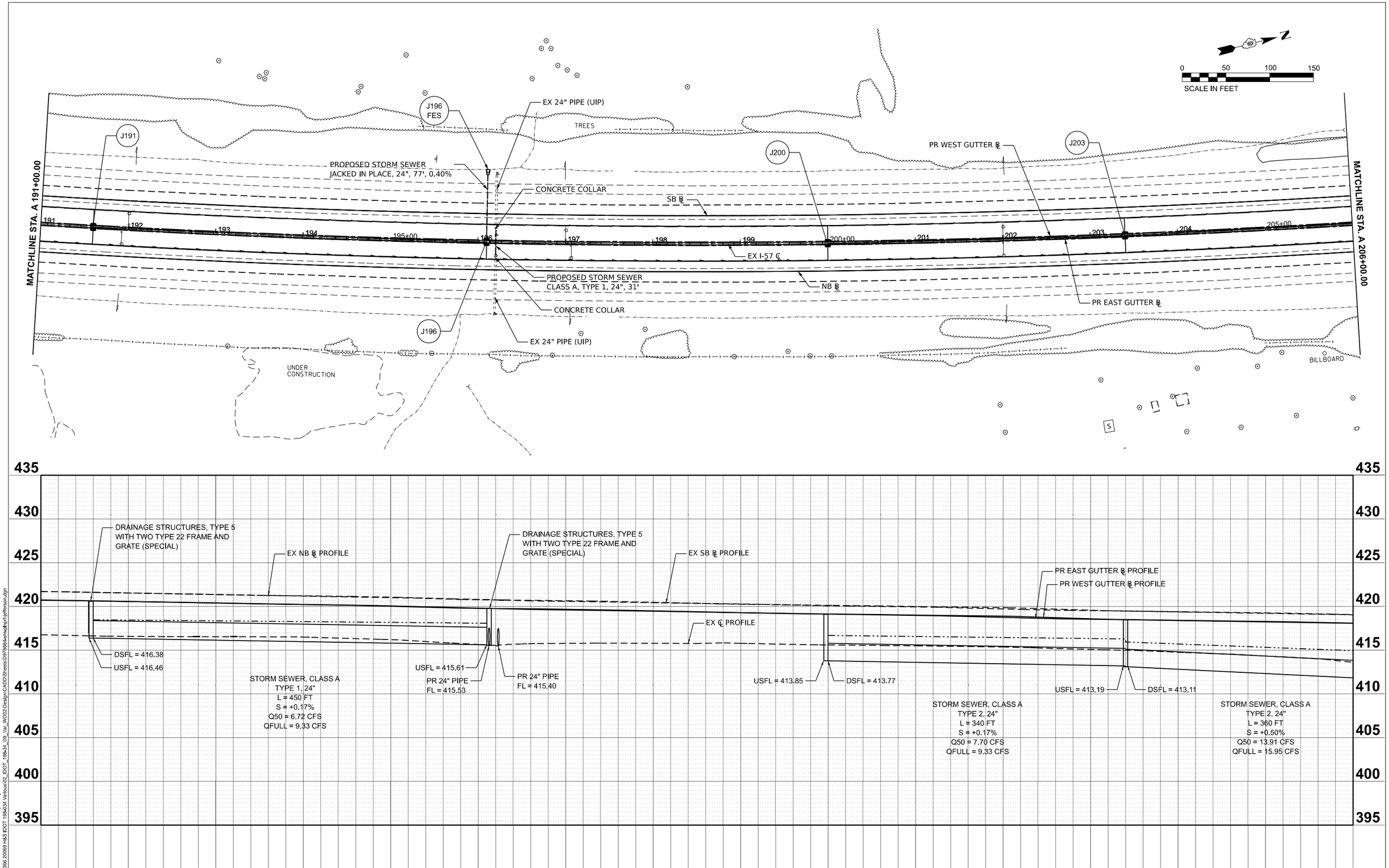

MODEL: I57JEFFERSON - I57JEFFERSON-13 [Sheet]
FILE NAME: G:\21-4366 20069 H&S IDOT 198-234 Various\02_IDOT_198-34_D9_Var_WO22\Design\CADD\Sheets\D978884-sht-dtlpr-jefferson.dgn

23 PUBLIC SQUARE
SUITE 470
BELLEVILLE, IL 62220
(618) 641-9088
TREKK DESIGN GROUP, LLC

USER NAME = hJones	DESIGNED -	REVISED -
	DRAWN -	REVISED -
PLOT SCALE = 0.08333317 ' / in.	CHECKED -	REVISED -
PLOT DATE = 9/30/2024	DATE -	REVISED -

STATE OF ILLINOIS
DEPARTMENT OF TRANSPORTATION

I-57 DRAINAGE PLAN & PROFILE
JEFFERSON COUNTY

SCALE: 1" = 50' | SHEET 13 OF 15 SHEETS | STA. | TO STA.

F.A. I RTE.	SECTION	COUNTY	TOTAL SHEETS	SHEET NO.
57	(28-2)B-2; (28-1)B-2		598	201

CONTRACT NO. 78884

ILLINOIS | FED. AID PROJECT

FRANKLIN/JEFFERSON

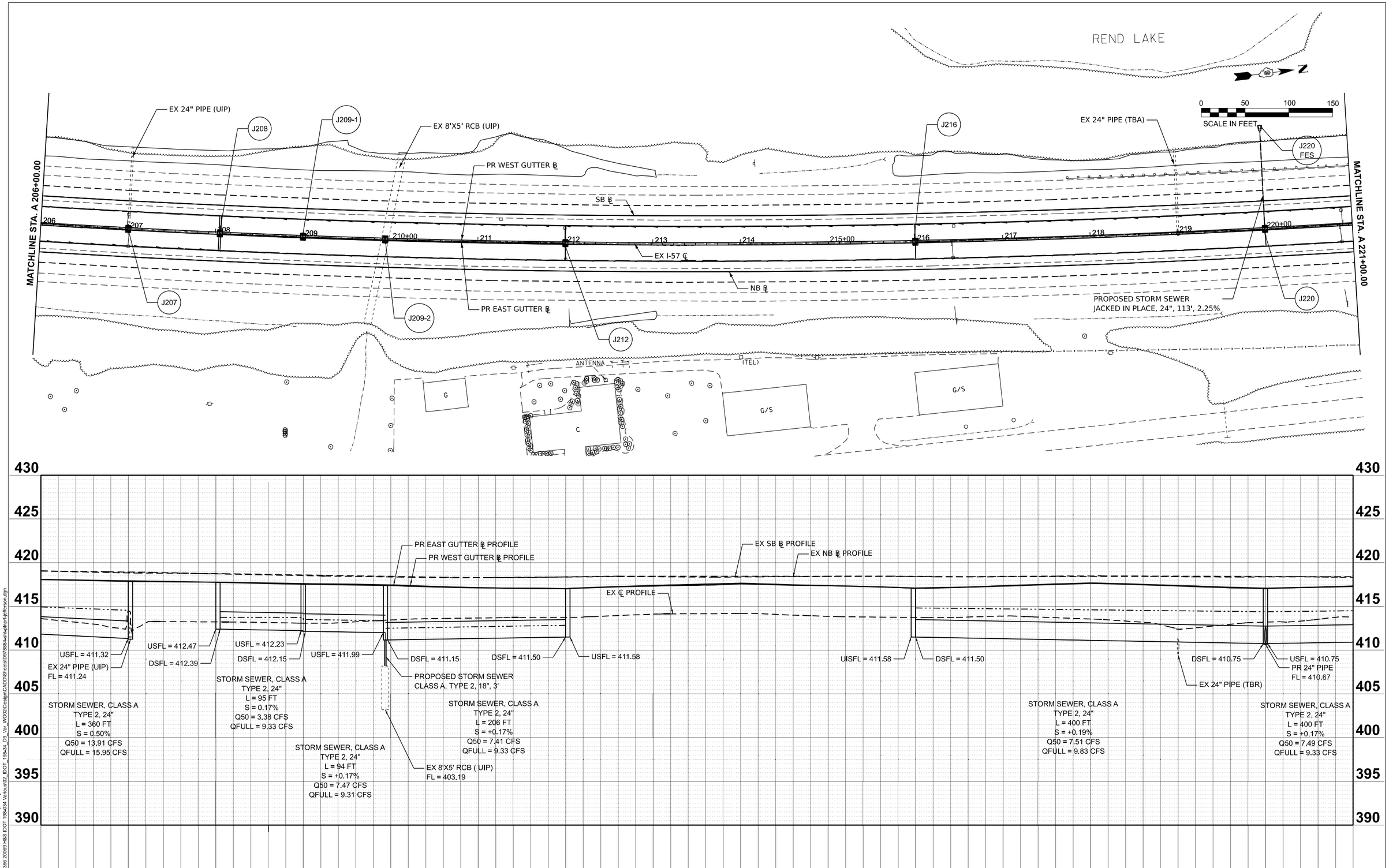

MODEL: I57JEFFERSON - I57JEFFERSON-14 [Sheet]
FILE NAME: G:\21-4366 20069 H&S IDOT 198-234 Various\02_IDOT_198-34_D9_Var_WO22\Design\CADD\Sheets\D978884-sht-dtlpr1-jefferson.dgn

23 PUBLIC SQUARE
SUITE 470
BELLEVILLE, IL 62220
(618) 641-9088
TREKK DESIGN GROUP, LLP

USER NAME = hjones	DESIGNED -	REVISED -
	DRAWN -	REVISED -
PLOT SCALE = 0.08333317 ' / in.	CHECKED -	REVISED -
PLOT DATE = 9/30/2024	DATE -	REVISED -

STATE OF ILLINOIS
DEPARTMENT OF TRANSPORTATION

I-57 DRAINAGE PLAN & PROFILE
JEFFERSON COUNTY

SCALE: 1" = 50' | SHEET 14 OF 15 SHEETS | STA. | TO STA.

F.A. I RTE.	SECTION	COUNTY	TOTAL SHEETS	SHEET NO.
57	(28-2)B-2; (28-1)B-2		598	202

CONTRACT NO. 78884

ILLINOIS | FED. AID PROJECT

FRANKLIN/JEFFERSON

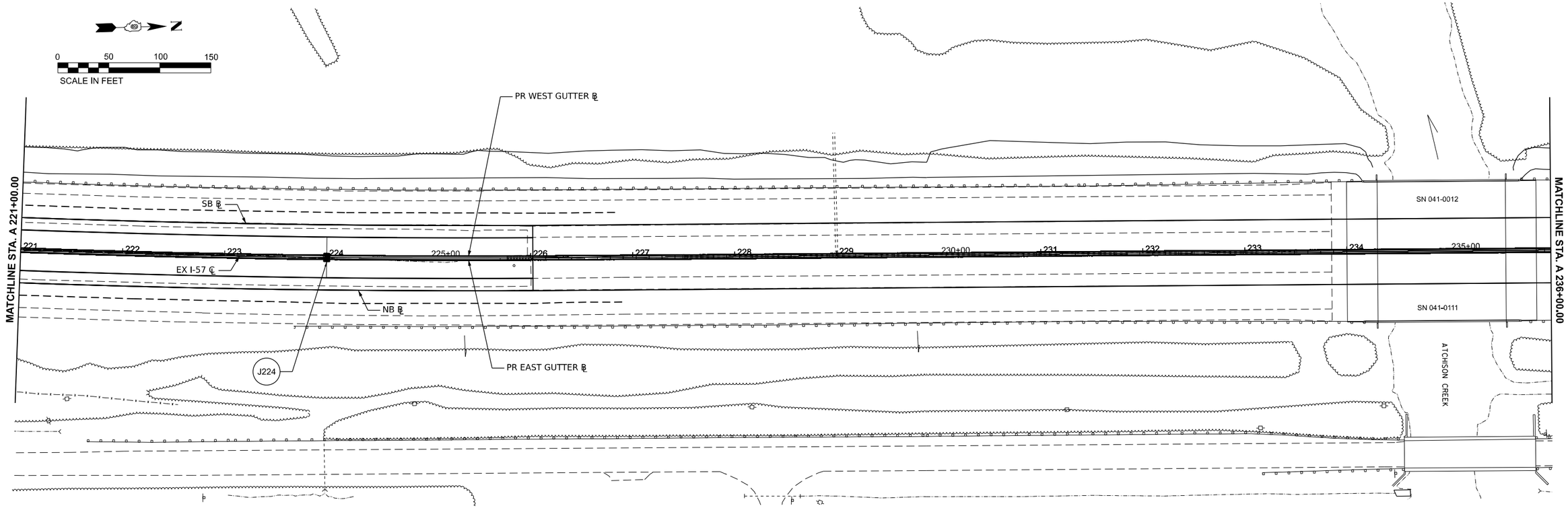

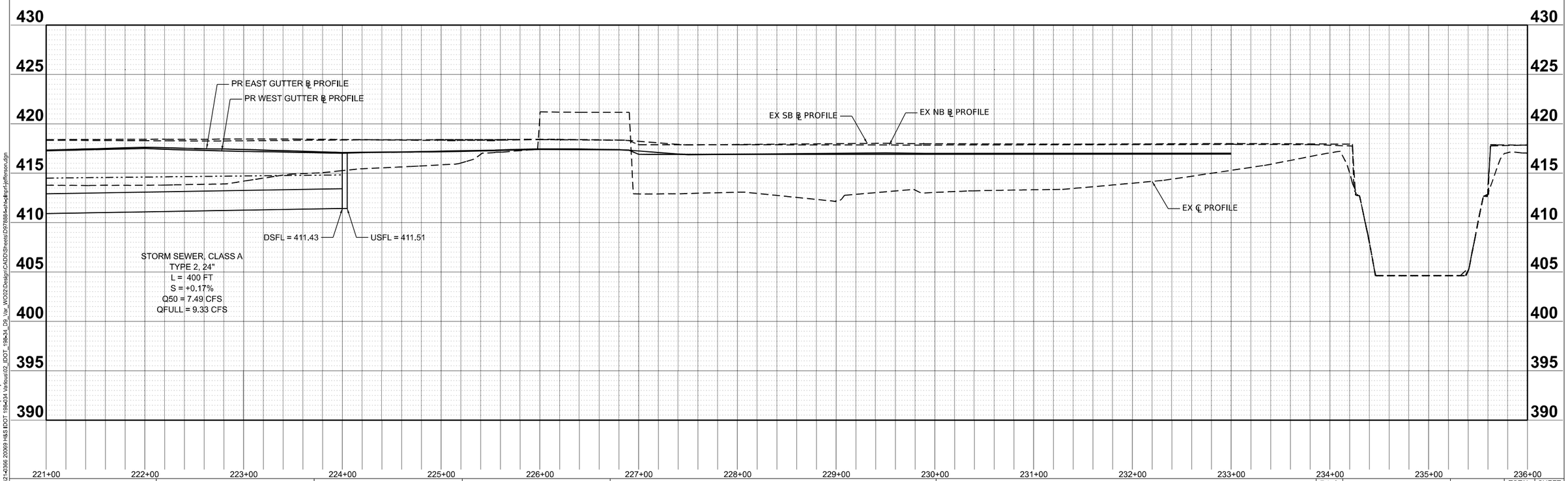

MODEL: I57JEFFERSON - I57JEFFERSON-15 [Sheet]
FILE NAME: G:\21-4366 20069 H&S IDOT 198-234 Various\02_IDOT_198-34_D9_Var_WO22\Design\CADD\Sheets\D978884-sht-plpr-jefferson.dgn

23 PUBLIC SQUARE
SUITE 470
BELLEVILLE, IL 62220
(618) 641-9088
TREKK DESIGN GROUP, LLC

USER NAME = hjones	DESIGNED -	REVISED -
	DRAWN -	REVISED -
PLOT SCALE = 0.08333317 ' / in.	CHECKED -	REVISED -
PLOT DATE = 9/30/2024	DATE -	REVISED -

STATE OF ILLINOIS
DEPARTMENT OF TRANSPORTATION

I-57 DRAINAGE PLAN & PROFILE
JEFFERSON COUNTY

SCALE: 1" = 50' | SHEET 15 OF 15 SHEETS | STA. TO STA.

F.A. I RTE.	SECTION	COUNTY	TOTAL SHEETS	SHEET NO.
57	(28-2)B-2; (28-1)B-2		598	203

CONTRACT NO. 78884

ILLINOIS | FED. AID PROJECT

FRANKLIN/JEFFERSON

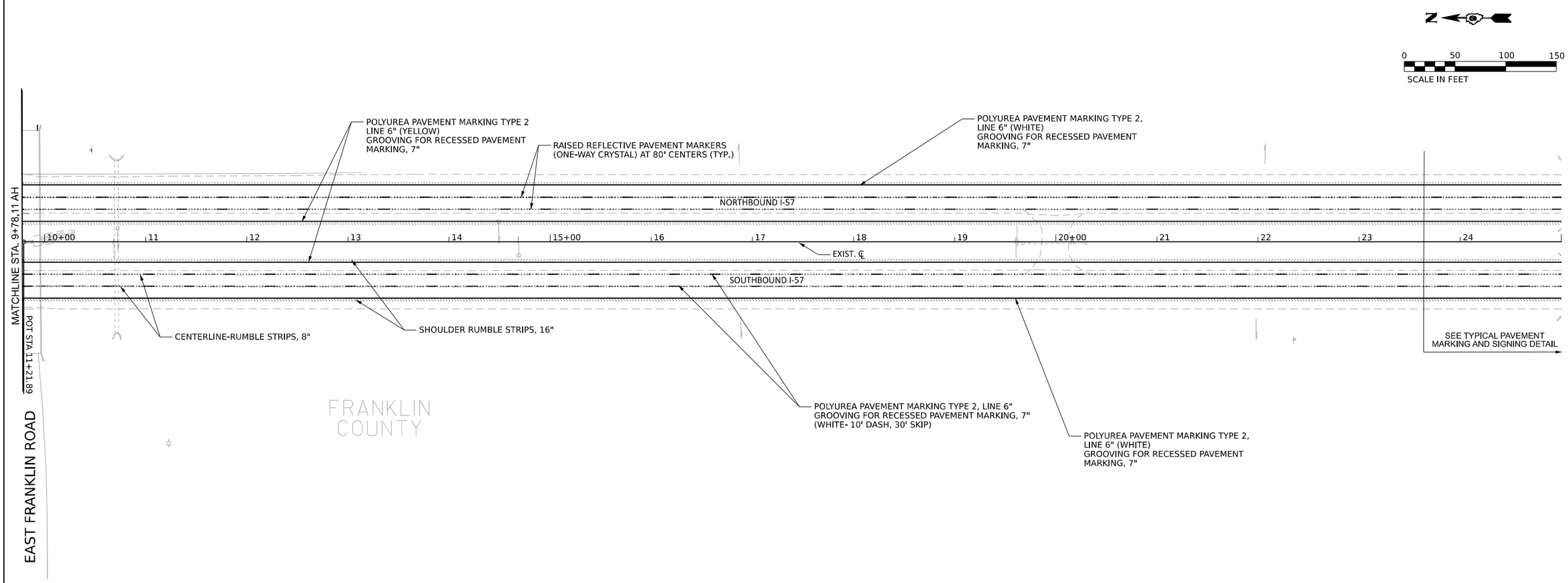

MODEL: I57JEFFERSON-3 - Plan 35 [Sheet] - Revised - FRANKLIN
FILE NAME: J:\2021\60184\Cadd\Design\CAD_Sheets\D978884-sht-pmk.dgn

ABNA DESIGN FIRM REG. 184.002117
745 McClintock Drive
Suite 210
Burr Ridge, IL 60527
Ph. 773-881-4788
Fax: 773-239-3728

USER NAME = muddin	DESIGNED - HH	REVISED -	
	DRAWN - IG	REVISED -	
PLOT SCALE = 0.16666000 ' / in.	CHECKED - HH	REVISED -	
PLOT DATE = 10/11/2024	DATE -	REVISED -	

STATE OF ILLINOIS
DEPARTMENT OF TRANSPORTATION

PAVEMENT MARKING
FRANKLIN COUNTY

SCALE: 1:50 | SHEET 1 OF 2 SHEETS | STA. | TO STA.

F.A. RTE.	SECTION	COUNTY	TOTAL SHEETS	SHEET NO.
57	(28-2)B-2; (28-1)B-2	FRANKLIN	598	204
		CONTRACT NO. 78884		
	ILLINOIS	FED. AID PROJECT		

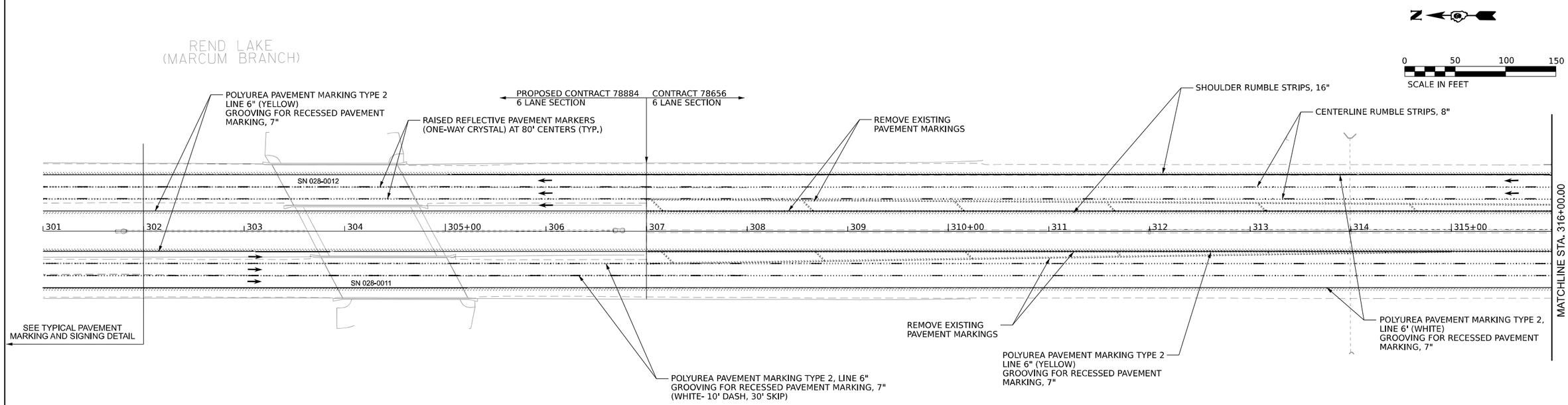

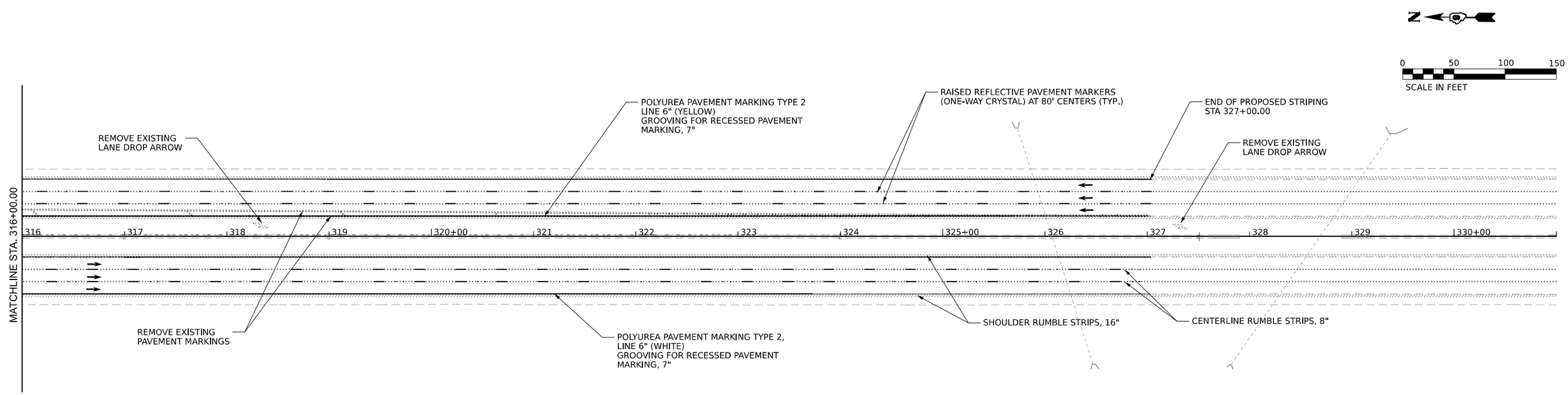

MODEL: IS7JEFFERSON-3 - Plan 35 [Sheet] - Revised
FILE NAME: J:\2021\6084\Cadd\Design\CAD_Sheets\D978884-sht-pmk.dgn

ABNA DESIGN FIRM REG. 184.002117
745 McClintock Drive
Suite 210
Burr Ridge, IL 60527
Ph. 773-481-4788
Fax: 773-239-3728

USER NAME = muddln	DESIGNED - HH	REVISED -	
	DRAWN - IG	REVISED -	
PLOT SCALE = 0.16660000 ' / in.	CHECKED - HH	REVISED -	
PLOT DATE = 10/11/2024	DATE -	REVISED -	

STATE OF ILLINOIS
DEPARTMENT OF TRANSPORTATION

PAVEMENT MARKING
FRANKLIN COUNTY

SCALE: 1:50 | SHEET 2 OF 2 SHEETS | STA. TO STA.

F.A.I. RTE.	SECTION	COUNTY	TOTAL SHEETS	SHEET NO.
57	(28-2)B-2; (28-1)B-2	FRANKLIN	598	205

CONTRACT NO. 78884

ILLINOIS | FED. AID PROJECT

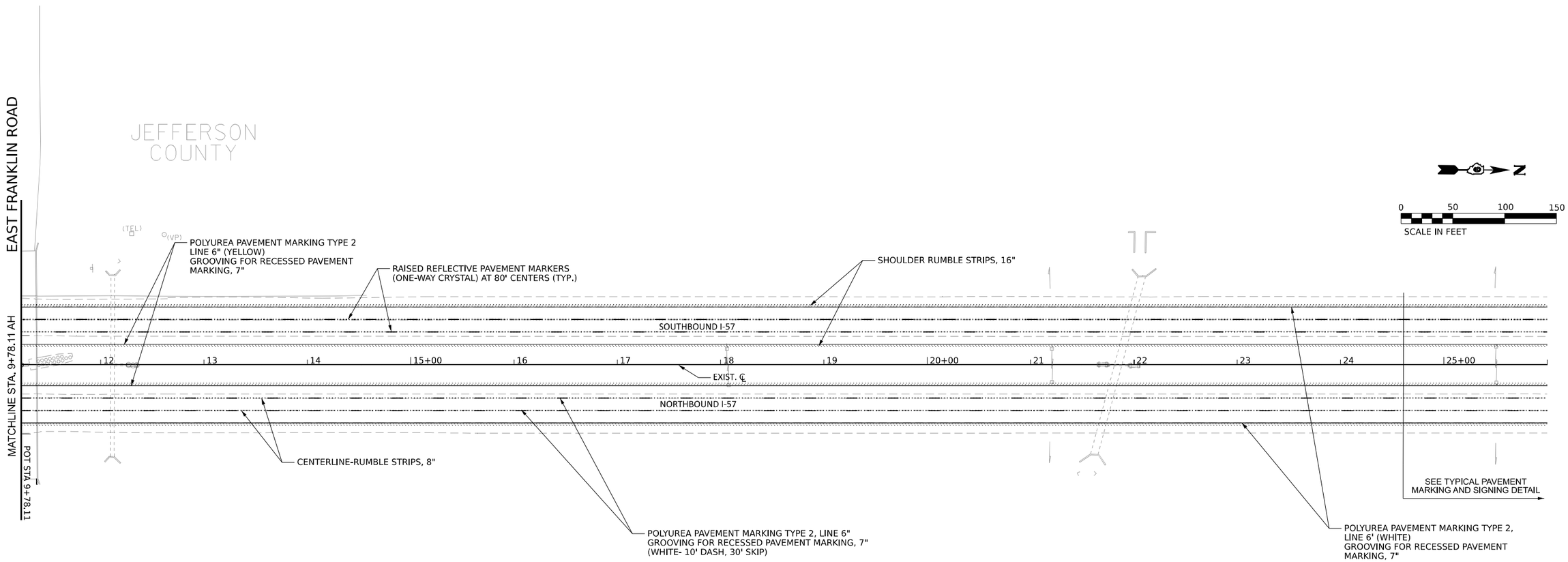

MODEL: I57JEFFERSON-3 - Plan 35 [Sheet] - Revised - JEFFERSON
FILE NAME: j:\2021\6084\Cadd\Design\CAD_Sheets\D978884-sht-pmk.dgn

ABNA DESIGN FIRM REG. 184.002117
745 McClintock Drive
Suite 210
Burr Ridge, IL 60527
Ph. 773-881-4788
Fax: 773-239-3728

USER NAME = muddin	DESIGNED - HH	REVISED -	
	DRAWN - IG	REVISED -	
PLOT SCALE = 0.16666000 ' / in.	CHECKED - HH	REVISED -	
PLOT DATE = 10/11/2024	DATE -	REVISED -	

STATE OF ILLINOIS
DEPARTMENT OF TRANSPORTATION

PAVEMENT MARKING
JEFFERSON COUNTY

SCALE: 1:50 | SHEET 1 OF 2 SHEETS | STA. | TO STA.

F.A. RTE.	SECTION	COUNTY	TOTAL SHEETS	SHEET NO.
57	(28-2)B-2; (28-1)B-2	JEFFERSON	598	206
		CONTRACT NO. 78884		
	ILLINOIS	FED. AID PROJECT		

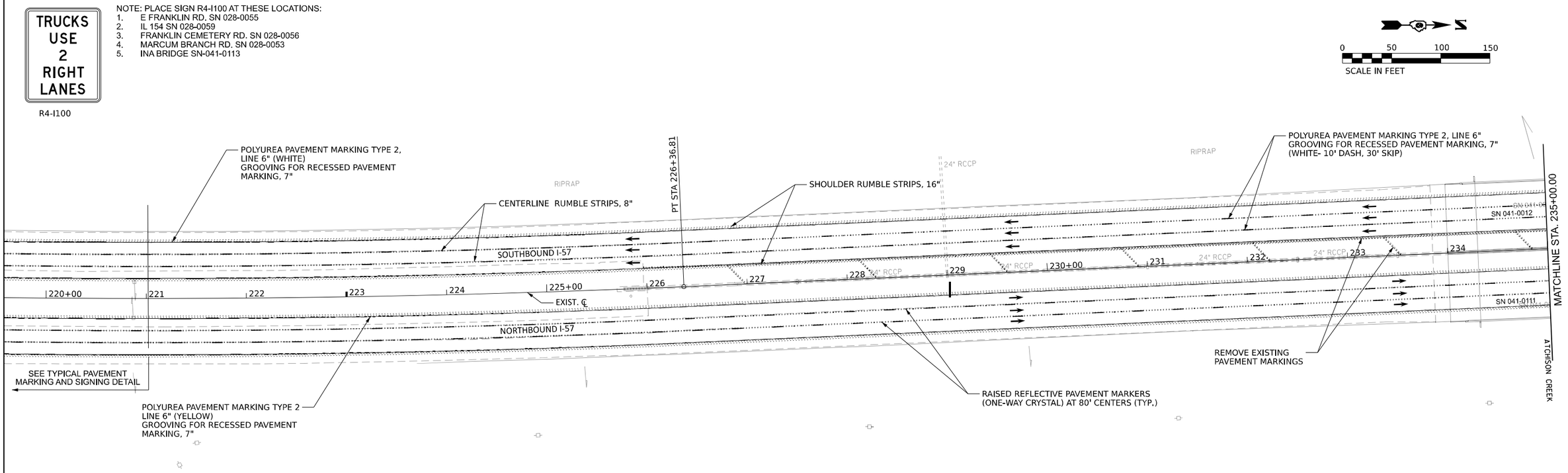

MODEL: I57JEFFERSON-3 - Plan 36 [Sheet]
FILE NAME: J:\2021\6084\CaddDesign\CAD Sheets\0978884-sht-pmk.dgn

ABNA DESIGN FIRM REG. 184,002117
745 McClintock Drive Suite 210 Burr Ridge, IL 60527 Ph. 773-481-4788 Fax: 773-239-3728

USER NAME = muddin	DESIGNED - HH	REVISED -	
	DRAWN - IG	REVISED -	
PLOT SCALE = 0.16666685 ' / in.	CHECKED - HH	REVISED -	
PLOT DATE = 10/11/2024	DATE -	REVISED -	

STATE OF ILLINOIS
DEPARTMENT OF TRANSPORTATION

PAVEMENT MARKING
JEFFERSON COUNTY

SCALE 1:20 | SHEET 2 OF 2 SHEETS | STA. TO STA. 125

F.A.I. RTE.	SECTION	COUNTY	TOTAL SHEETS	SHEET NO.
57	(28-2)B-2; (28-1)B-2	JEFFERSON	598	207
		CONTRACT NO. 78884		
	ILLINOIS	FED. AID PROJECT		

TYPICAL PAVEMENT MARKING AND SIGNING DETAILS

FRANKLIN COUNTY
STA 9+78.11 TO STA 307+00.00

JEFFERSON COUNTY
11+21.89 TO 226+02.00

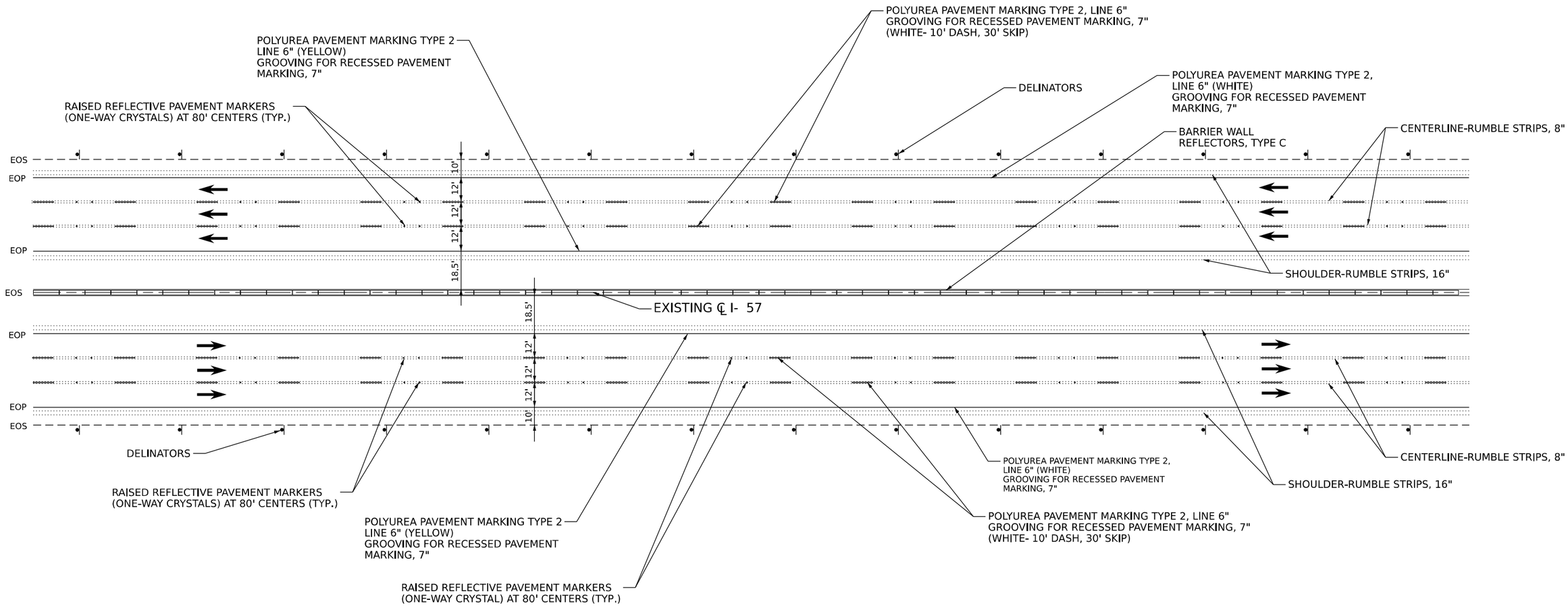

TYPICAL ENHANCED REFERENCE LOCATION SIGN
(SEE SIGNING SCHEDULE AND MILE POST MARKER SIGN SCHEDULE FOR LOCATIONS)

MODEL: I57FRANKLINA-2 - Plan 4 (Sheet1 - Copy-1
FILE NAME: J:\2021\6084\Cadd\Design\CAD_Sheets\D978884-sht-gmk.dgn

ABNA DESIGN FIRM REG. 184.002117
745 McClintock Drive
Suite 210
Burr Ridge, IL 60527
Ph. 773-681-4788
Fax: 773-239-3728

USER NAME = muddin	DESIGNED - HH	REVISED -	
	DRAWN - IG	REVISED -	
PLOT SCALE = 0.16660000 ' / in.	CHECKED - HH	REVISED -	
PLOT DATE = 10/16/2024	DATE -	REVISED -	

STATE OF ILLINOIS
DEPARTMENT OF TRANSPORTATION

PAVEMENT MARKING AND SIGNING TYPICALS AND DETAILS
ALTERNATE "A & B"

SCALE: NTS | SHEET 1 OF 3 SHEETS | STA. TO STA.

F.A.I. RTE.	SECTION	COUNTY	TOTAL SHEETS	SHEET NO.
57	(28-2)B-2; (28-1)B-2	FRANKLIN / JEFFERSON	598	208

CONTRACT NO. 78884

ILLINOIS | FED. AID PROJECT

TYPICAL EXIT RAMP PAVEMENT MARKING

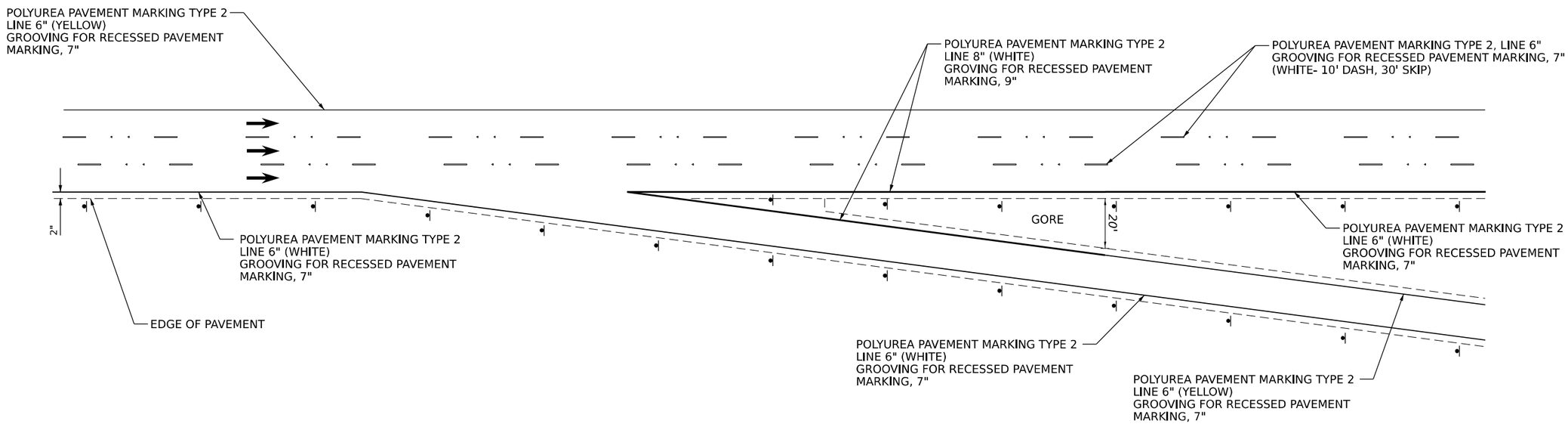

TYPICAL EXIT RAMP PAVEMENT MARKING (AUXILIARY LANE)

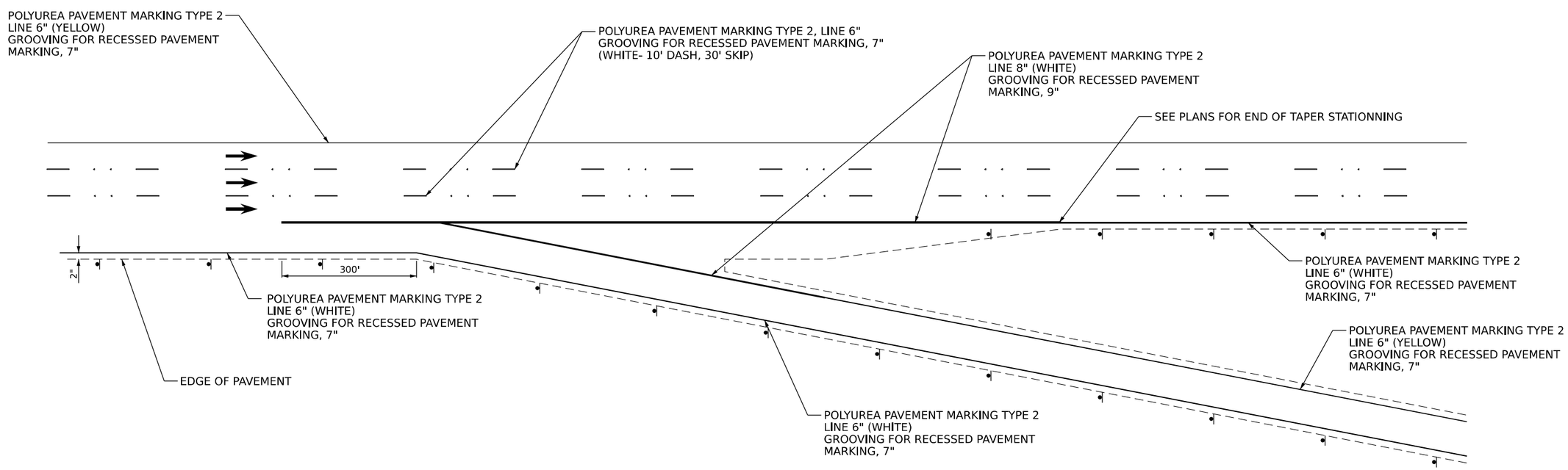

MODEL: I57FRANKLINA-2 • Plan 4 [Sheet] • Copy-1
FILE NAME: J:\2021\60BA\Cadd\Design\CAD_Sheets\D978884-sht-pmk-amp.dgn

ABNA DESIGN FIRM REG. 184.002117
745 McClintock Drive
Suite 210
Burr Ridge, IL 60527
Ph. 773-481-4788
Fax: 773-239-3728

USER NAME = muddin	DESIGNED - HH	REVISED -	
	DRAWN - IG	REVISED -	
PLOT SCALE = 0.16660000 ' / in.	CHECKED - HH	REVISED -	
PLOT DATE = 10/11/2024	DATE -	REVISED -	

STATE OF ILLINOIS
DEPARTMENT OF TRANSPORTATION

PAVEMENT MARKING AND SIGNING TYPICALS AND DETAILS
EXIT RAMP

SCALE: NTS | SHEET 2 OF 3 SHEETS | STA. TO STA.

F.A.I. RTE.	SECTION	COUNTY	TOTAL SHEETS	SHEET NO.
57	(28-2)B-2; (28-1)B-2	VARIOUS	598	209
		CONTRACT NO. 78884		
	ILLINOIS	FED. AID PROJECT		

TYPICAL ENTRANCE RAMP PAVEMENT MARKING

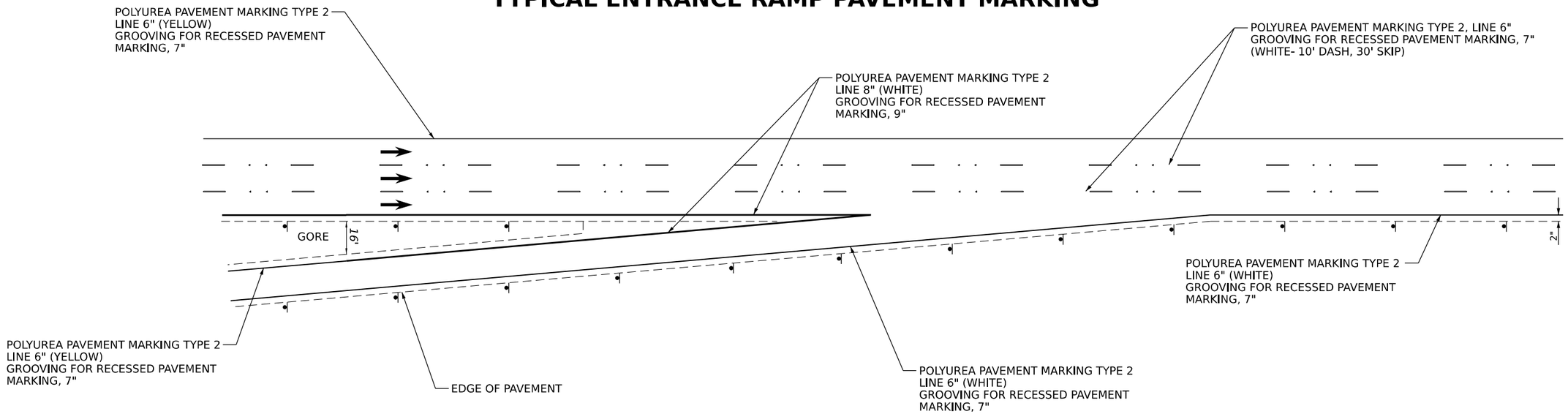

TYPICAL ENTRANCE RAMP PAVEMENT MARKING (WITH EXCLUSIVE LANE)

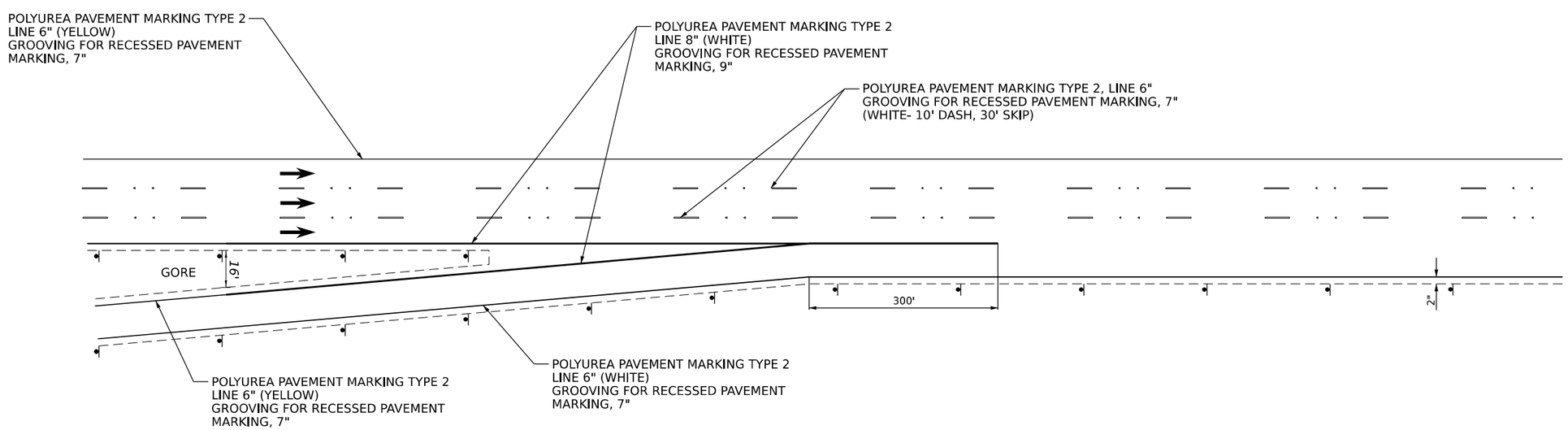

MODEL: I57FRANKLINA-2 • Plan 4 [Sheet] • Copy-1
FILE NAME: J:\2021\60BA\Cadd\Design\CAD_Sheets\D978884-sht-pmk-amp.dgn

ABNA DESIGN FIRM REG. 184.002117
745 McClintock Drive
Suite 210
Burr Ridge, IL 60527
Ph. 773-481-4788
Fax: 773-239-3728

USER NAME = muddin	DESIGNED - HH	REVISED -	
	DRAWN - IG	REVISED -	
PLOT SCALE = 0.16660000 ' / in.	CHECKED - HH	REVISED -	
PLOT DATE = 10/11/2024	DATE -	REVISED -	

STATE OF ILLINOIS
DEPARTMENT OF TRANSPORTATION

PAVEMENT MARKING AND SIGNING TYPICALS AND DETAILS
EXIT RAMP

SCALE: NTS | SHEET 3 OF 3 SHEETS | STA. TO STA.

F.A.I. RTE.	SECTION	COUNTY	TOTAL SHEETS	SHEET NO.
57	(28-2)B-2; (28-1)B-2	VARIOUS	598	210
		CONTRACT NO. 78884		
	ILLINOIS	FED. AID PROJECT		

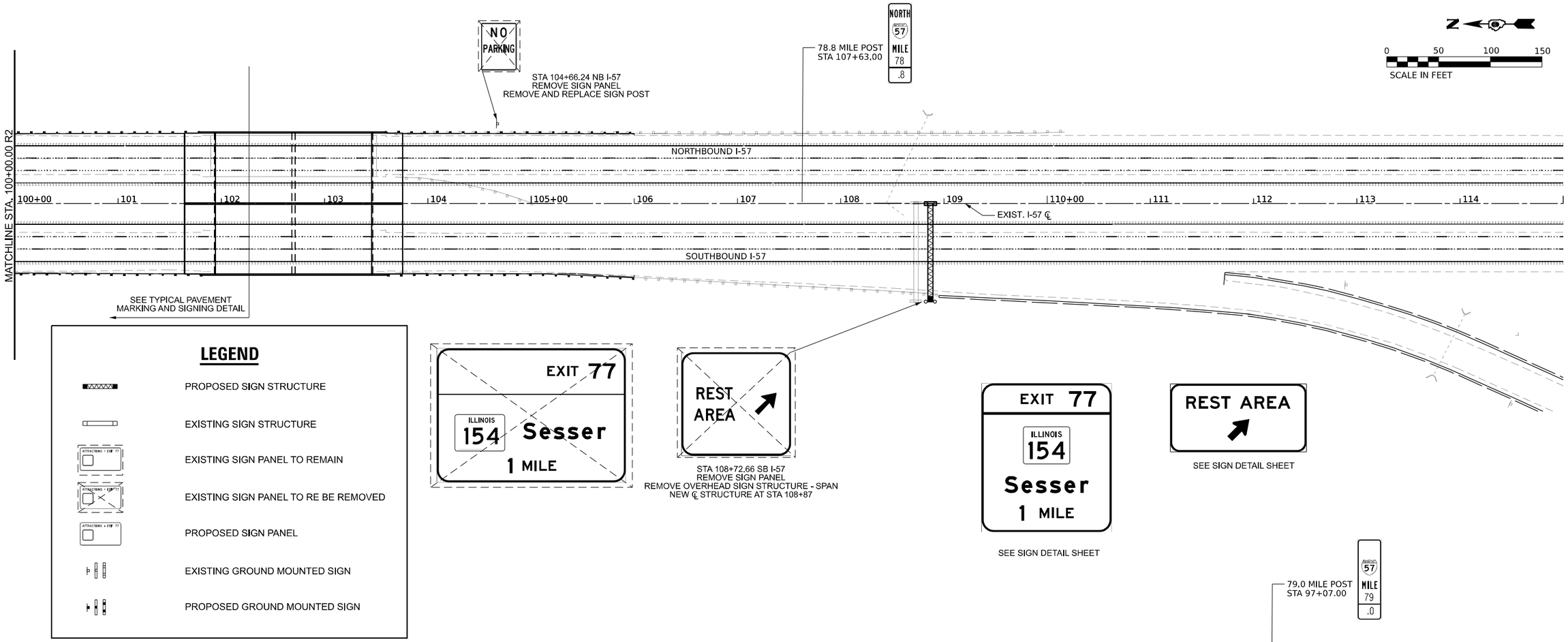

LEGEND

- PROPOSED SIGN STRUCTURE
- EXISTING SIGN STRUCTURE
- EXISTING SIGN PANEL TO REMAIN
- EXISTING SIGN PANEL TO RE BE REMOVED
- PROPOSED SIGN PANEL
- EXISTING GROUND MOUNTED SIGN
- PROPOSED GROUND MOUNTED SIGN

EXIT 77
ILLINOIS 154
Sesser
1 MILE

REST AREA

STA 108+72.66 SB I-57
REMOVE SIGN PANEL
REMOVE OVERHEAD SIGN STRUCTURE - SPAN
NEW ℄ STRUCTURE AT STA 108+87

EXIT 77
ILLINOIS 154
Sesser
1 MILE

SEE SIGN DETAIL SHEET

REST AREA

SEE SIGN DETAIL SHEET

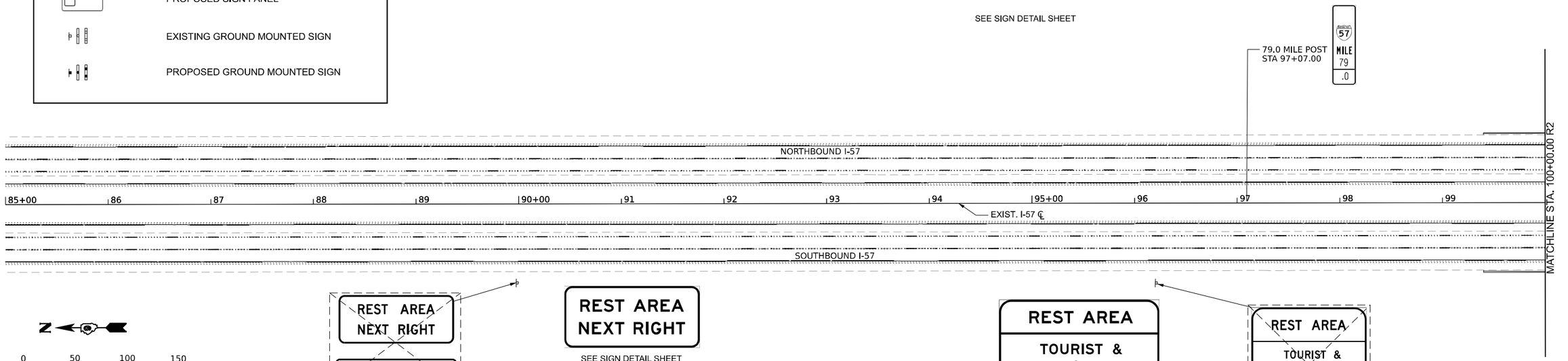

REST AREA
NEXT RIGHT
VENDING MACHINE

STA 89+97.42 SB I-57
REMOVE SIGN PANEL

REST AREA
NEXT RIGHT

SEE SIGN DETAIL SHEET

VENDING MACHINE

SEE SIGN DETAIL SHEET

REST AREA
TOURIST &
ARTS/CRAFTS
MARKET
INFORMATION

SEE SIGN DETAIL SHEET

REST AREA
TOURIST &
ARTS / CRAFTS
MARKET
INFORMATION

STA 96+20.15 SB I-57
REMOVE SIGN PANEL

MODEL: I57FRANKLIN4-2 - Plan 7 [Sheet]
FILE NAME: J:\2021\60841\Cadd\Design\CAD_Sheets\0978884-sht-pmk-sign_exist.dgn

ABNA DESIGN FIRM REG. 184.002117
745 McClintock Drive
Suite 210
Burr Ridge, IL 60527
Ph. 773-881-4788
Fax: 773-239-3728

USER NAME = muddin	DESIGNED - HH	REVISED -	
	DRAWN - IG	REVISED -	
PLOT SCALE = 0.166667 ' / in.	CHECKED - HH	REVISED -	
PLOT DATE = 10/15/2024	DATE -	REVISED -	

STATE OF ILLINOIS
DEPARTMENT OF TRANSPORTATION

SIGNING PLAN

SCALE: 1:50 | SHEET 1 OF 6 SHEETS | STA. TO STA.

F.A.I. RTE.	SECTION	COUNTY	TOTAL SHEETS	SHEET NO.
57	(28-2)B-2; (28-1)B-2	FRANKLIN	598	211

CONTRACT NO. 78884

ILLINOIS | FED. AID PROJECT

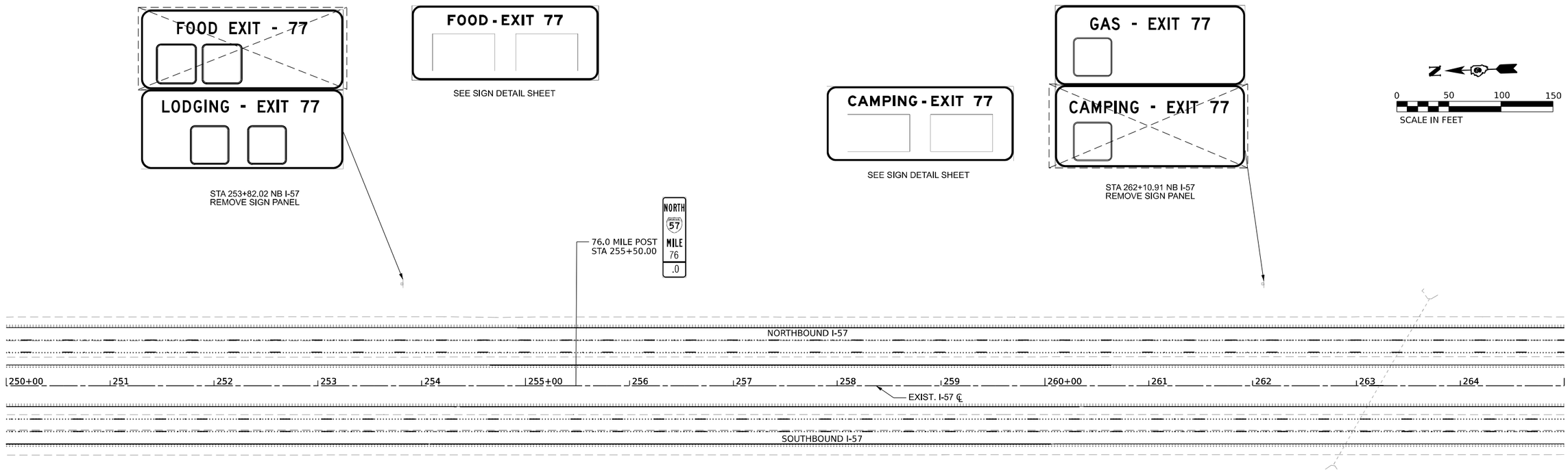

R4-I100

NOTE: PLACE SIGN R4-I100 AT THESE LOCATIONS:
1. E FRANKLIN RD. SN 028-0055
2. IL 154 SN 028-0059
3. FRANKLIN CEMETERY RD. SN 028-0056
4. MARCUM BRANCH RD. SN 028-0053
5. INA BRIDGE SN-041-0113

LEGEND

- PROPOSED SIGN STRUCTURE
- EXISTING SIGN STRUCTURE
- EXISTING SIGN PANEL TO REMAIN
- EXISTING SIGN PANEL TO RE BE REMOVED
- PROPOSED SIGN PANEL
- EXISTING GROUND MOUNTED SIGN
- PROPOSED GROUND MOUNTED SIGN

MODEL: I57FRANKLIN-2 - Plan 17 [Sheet]
FILE NAME: J:\2021\6084\Cadd\Design\CAD_Sheets\D978884-sht-pmk-sign_exist.dgn

ABNA DESIGN FIRM REG. 184.002117
745 McClintock Drive
Suite 210
Burr Ridge, IL 60527
Ph. 773-881-4788
Fax: 773-230-3728

USER NAME = muddin	DESIGNED - HH	REVISED -	
	DRAWN - IG	REVISED -	
PLOT SCALE = 0.166667 ' / in.	CHECKED - HH	REVISED -	
PLOT DATE = 10/15/2024	DATE -	REVISED -	

STATE OF ILLINOIS
DEPARTMENT OF TRANSPORTATION

SIGNING PLAN

SCALE: 1:50 | SHEET 2 OF 6 SHEETS | STA. | TO STA.

F.A.I. RTE.	SECTION	COUNTY	TOTAL SHEETS	SHEET NO.
57	(28-2)B-2; (28-1)B-2	FRANKLIN	598	212
		CONTRACT NO. 78884		
	ILLINOIS	FED. AID PROJECT		

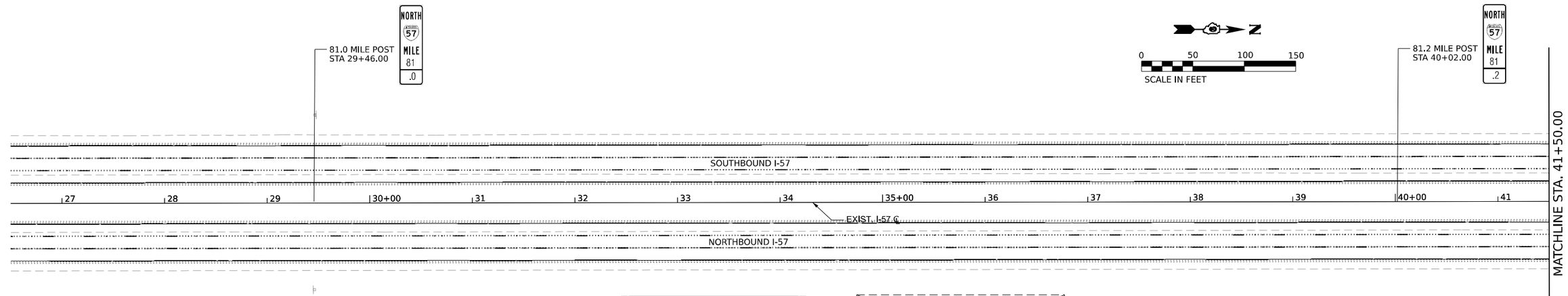

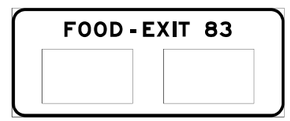

SEE SIGN DETAIL SHEET

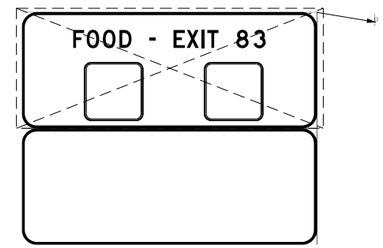

STA 37+11.00 NB I-57
REMOVE SIGN PANEL

LEGEND

- PROPOSED SIGN STRUCTURE
- EXISTING SIGN STRUCTURE
- EXISTING SIGN PANEL TO REMAIN
- EXISTING SIGN PANEL TO RE BE REMOVED
- PROPOSED SIGN PANEL
- EXISTING GROUND MOUNTED SIGN
- PROPOSED GROUND MOUNTED SIGN

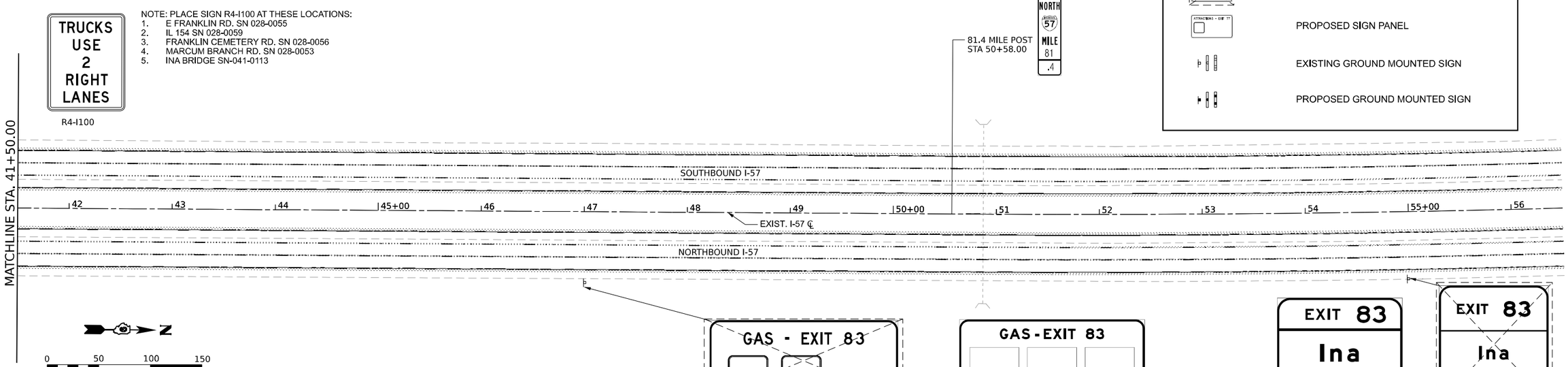

NOTE: PLACE SIGN R4-I100 AT THESE LOCATIONS:
1. E FRANKLIN RD. SN 028-0055
2. IL 154 SN 028-0059
3. FRANKLIN CEMETERY RD. SN 028-0056
4. MARCUM BRANCH RD. SN 028-0053
5. INA BRIDGE SN-041-0113

STA 46+98.00 NB I-57
REMOVE SIGN PANEL

SEE SIGN DETAIL SHEET

SEE SIGN DETAIL SHEET

STA 55+00.00 NB I-57
REMOVE SIGN PANEL

MODEL: I57JEFFERSON-3 - Plan 23 [Sheet]
FILE NAME: J:\2021\60841Cadd\Design\CAD_Sheets\D978884-sht-pmk-sign_exist.dgn

ABNA DESIGN FIRM REG. 184.002117
745 McClintock Drive
Suite 210
Burr Ridge, IL 60527
Ph. 773-881-4788
Fax: 773-230-3728

USER NAME = muddin	DESIGNED - HH	REVISED -	
	DRAWN - IG	REVISED -	
PLOT SCALE = 0.166667 ' / in.	CHECKED - HH	REVISED -	
PLOT DATE = 10/15/2024	DATE -	REVISED -	

STATE OF ILLINOIS
DEPARTMENT OF TRANSPORTATION

SIGNING PLAN

SCALE: 1:50 | SHEET 3 OF 6 SHEETS | STA. | TO STA.

F.A.I. RTE.	SECTION	COUNTY	TOTAL SHEETS	SHEET NO.
57	(28-2)B-2; (28-1)B-2	JEFFERSON	598	213

CONTRACT NO. 78884

ILLINOIS | FED. AID PROJECT

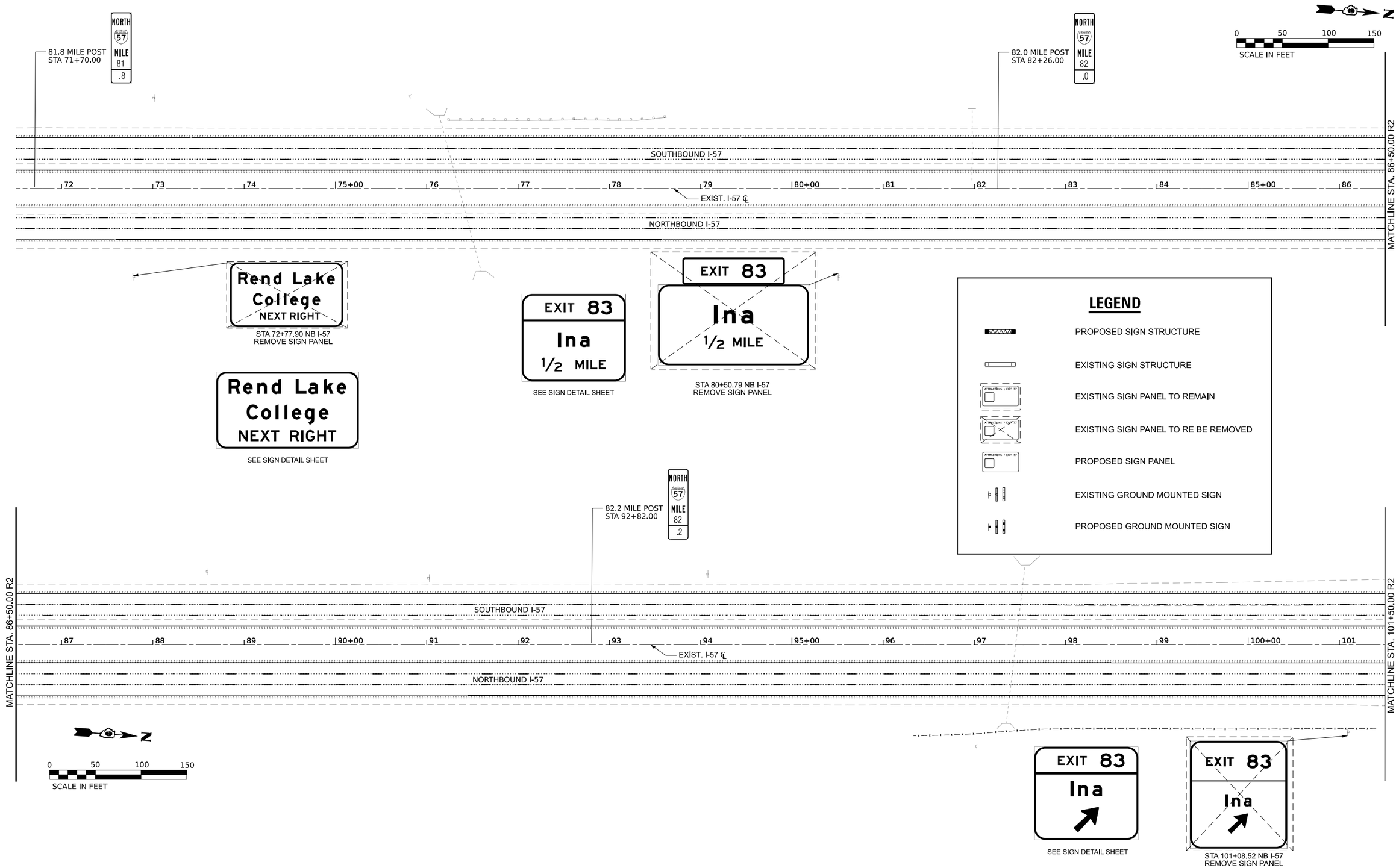

MODEL: I57JEFFERSON-3 - Plan 25 [Sheet]
FILE NAME: J:\2021\6084\CaddDesign\CAD_Sheets\D978884-sht-pmk-sign exist.dgn

ABNA DESIGN FIRM REG. 184.002117
745 McClintock Drive
Suite 210
Burr Ridge, IL 60527
Ph. 773-881-4788
Fax: 773-239-3728

USER NAME = muddin	DESIGNED - HH	REVISED -	
	DRAWN - IG	REVISED -	
PLOT SCALE = 0.166667 ' / in.	CHECKED - HH	REVISED -	
PLOT DATE = 10/15/2024	DATE -	REVISED -	

STATE OF ILLINOIS
DEPARTMENT OF TRANSPORTATION

SIGNING PLAN

SCALE: 1:50 | SHEET 4 OF 6 SHEETS | STA. TO STA.

F.A.I. RTE.	SECTION	COUNTY	TOTAL SHEETS	SHEET NO.
57	(28-2)B-2; (28-1)B-2	JEFFERSON	598	214
		CONTRACT NO. 78884		
		ILLINOIS	FED. AID PROJECT	

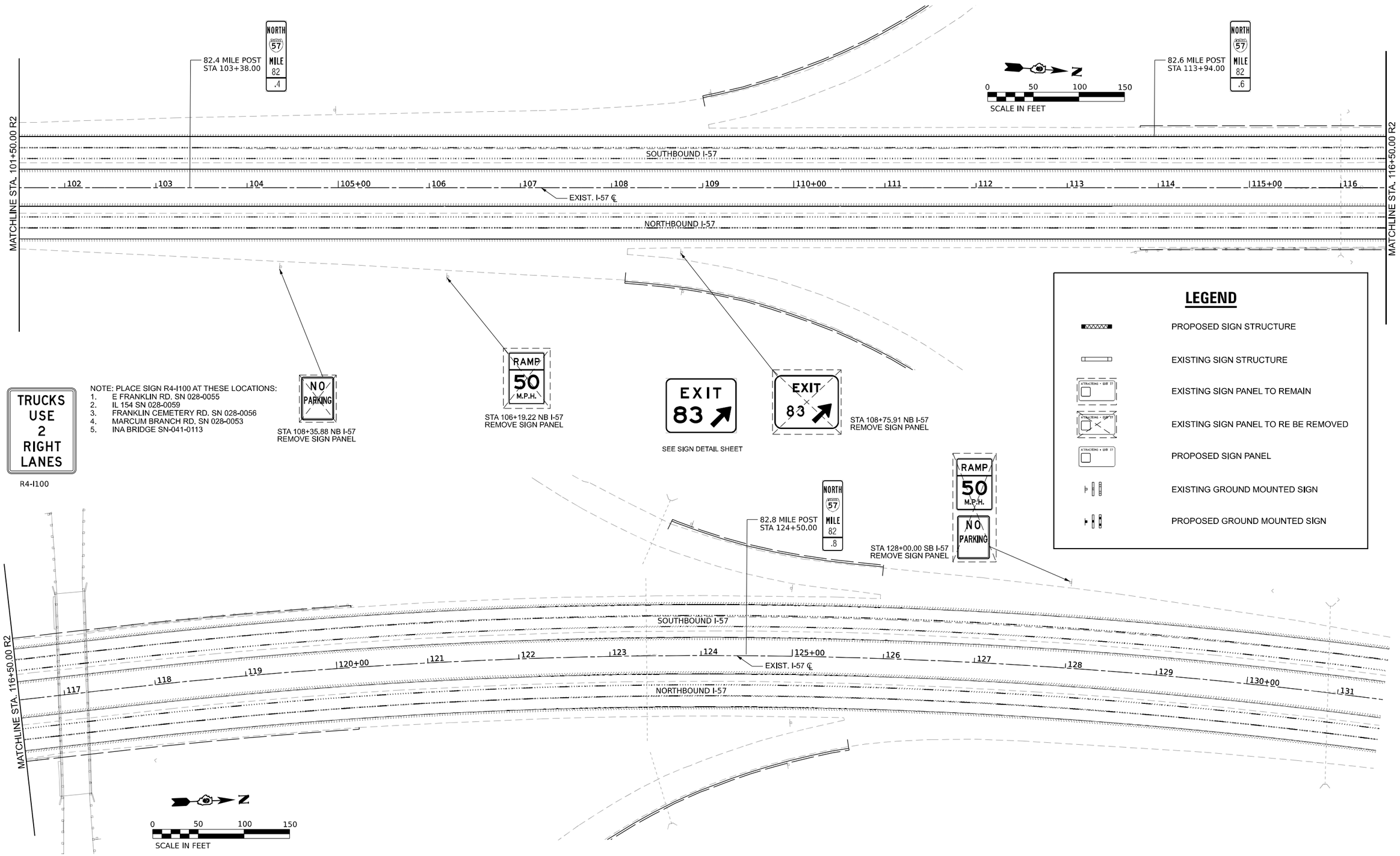

MODEL: I57JEFFERSON-3 - Plan 27 [Sheet]
FILE NAME: J:\2021\60841\cadd\Design\CAD_Sheets\D978884-sht-pmk-sign_exist.dgn

ABNA DESIGN FIRM REG. 184.002117
745 McClintock Drive
Suite 210
Burr Ridge, IL 60527
Ph. 773-481-4788
Fax: 773-239-3728

USER NAME = muddin	DESIGNED - HH	REVISED -	
	DRAWN - IG	REVISED -	
PLOT SCALE = 0.166667 ' / in.	CHECKED - HH	REVISED -	
PLOT DATE = 10/15/2024	DATE -	REVISED -	

STATE OF ILLINOIS
DEPARTMENT OF TRANSPORTATION

SIGNING PLAN

SCALE: 1:50 | SHEET 5 OF 6 SHEETS | STA. TO STA.

F.A.I. RTE.	SECTION	COUNTY	TOTAL SHEETS	SHEET NO.
57	(28-2)B-2; (28-1)B-2	JEFFERSON	598	215
		CONTRACT NO. 78884		
	ILLINOIS	FED. AID PROJECT		

FRANKLIN

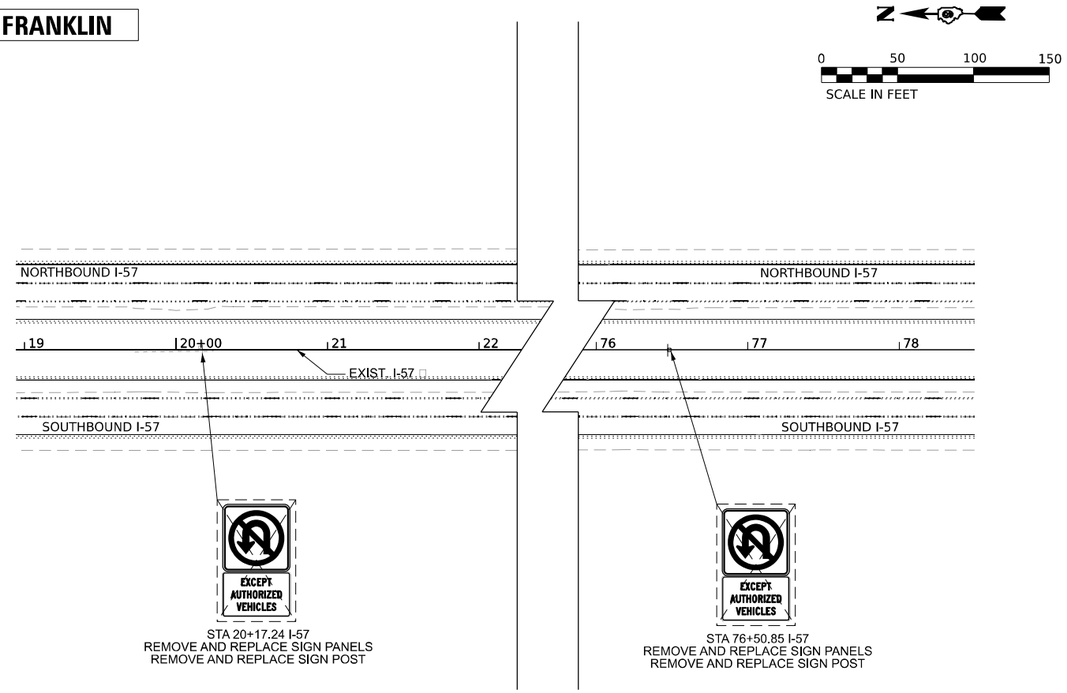

FRANKLIN

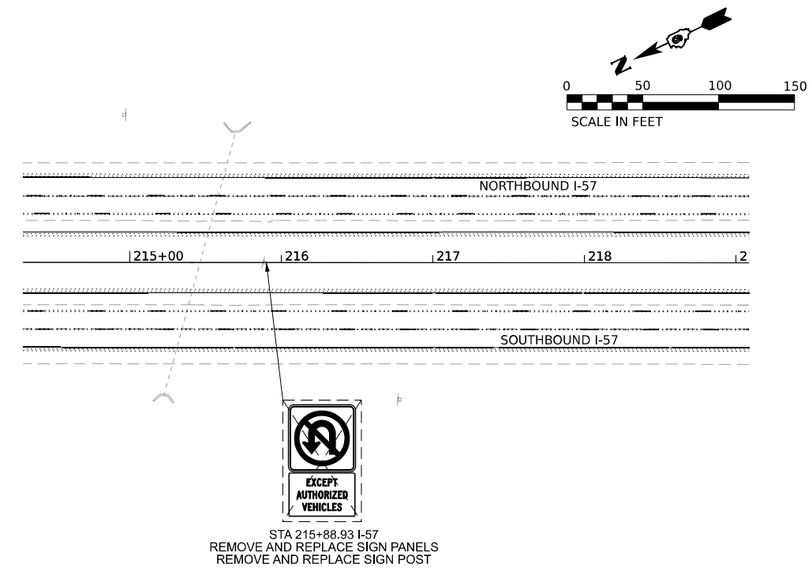

LEGEND

- PROPOSED SIGN STRUCTURE
- EXISTING SIGN STRUCTURE
- EXISTING SIGN PANEL TO REMAIN
- EXISTING SIGN PANEL TO RE BE REMOVED
- PROPOSED SIGN PANEL
- EXISTING GROUND MOUNTED SIGN
- PROPOSED GROUND MOUNTED SIGN

JEFFERSON

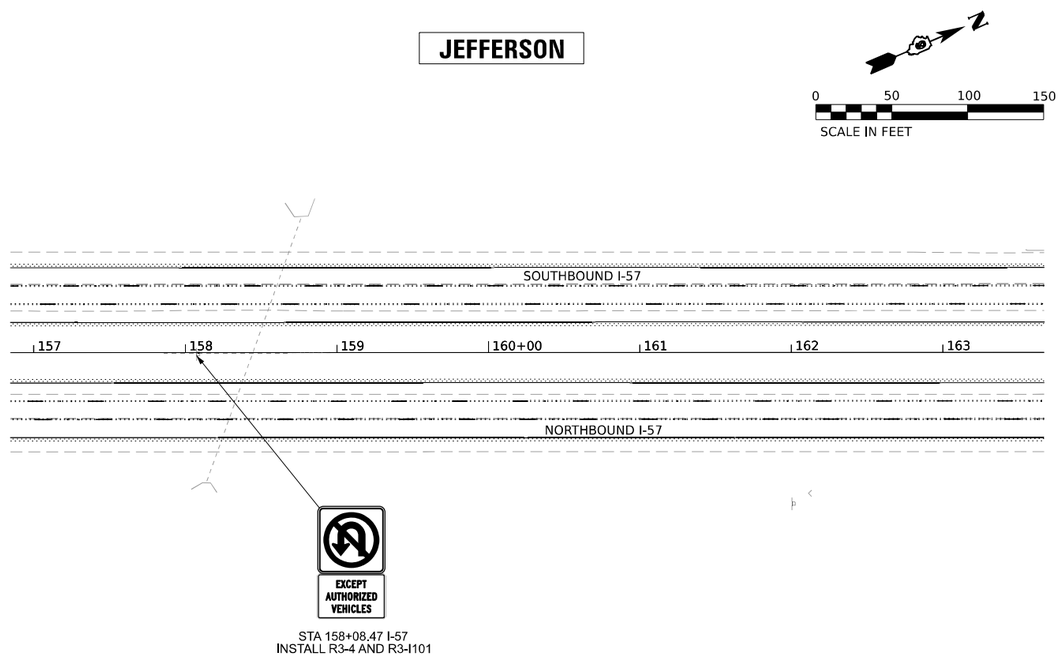

MODEL: I57JEFFERSON-3 - Plan 36 [Sheet]
FILE NAME: i:\2021\6084\Cadd\Design\CAD_Sheets\D978884-sht-smk-dgn_exist.dgn

ABNA DESIGN FIRM REG. 184.002117
745 McClintock Drive
Suite 210
Burr Ridge, IL 60527
Ph. 773-881-4788
Fax: 773-239-3728

USER NAME = mudoln	DESIGNED - HH	REVISED -	
	DRAWN - IG	REVISED -	
PLOT SCALE = 0.166666 ' / in.	CHECKED - HH	REVISED -	
PLOT DATE = 10/15/2024	DATE -	REVISED -	

STATE OF ILLINOIS
DEPARTMENT OF TRANSPORTATION

SIGNING PLAN

SCALE: 1:50 | SHEET 6 OF 6 SHEETS | STA. | TO STA.

F.A.I. RTE.	SECTION	COUNTY	TOTAL SHEETS	SHEET NO.
57	(28-2)B-2; (28-1)B-2	VARIOUS	598	216

CONTRACT NO. 78884

ILLINOIS | FED. AID PROJECT

PROPOSED MILE POST MARKER SIGNING

INTERMEDIATE ENHANCED REFERENCE LOCATION SIGNS (D10-5) SHALL BE INSTALLED AT EVERY 0.2 MILE MARKER WITHIN THE CONTRACT LIMITS AT THE STATIONS INDICATED IN THE SIGNING SCHEDULE. SIGNS SHALL BE INSTALLED ALONG THE MEDIAN BARRIER WALL.

SIGNS SHALL BE MOUNTED TO THE CONCRETE BARRIER WALL. REFER TO SIGN SUPPORT (SPECIAL) DETAIL. EACH SIGN ASSEMBLY SHALL INCLUDE A SIGN PANEL FOR BOTH DIRECTIONS OF TRAFFIC.

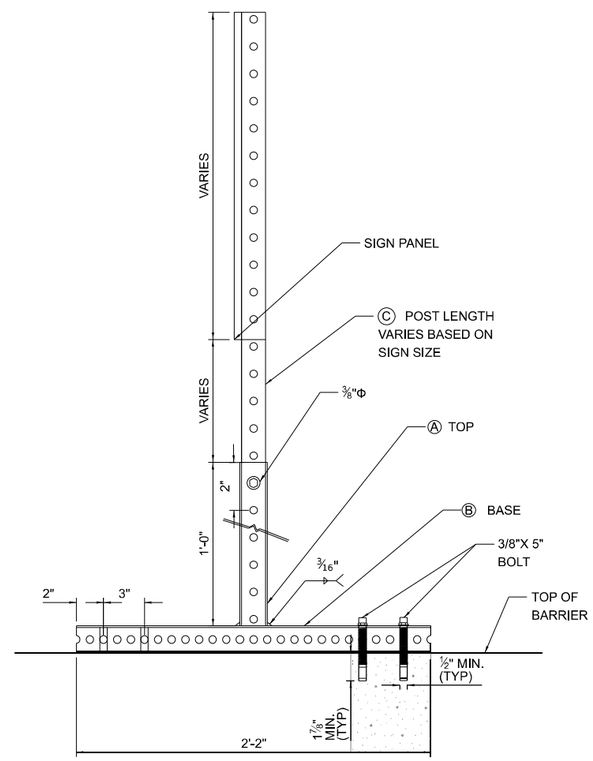

A	2 1/4" X 2 1/4" X 1' (12 GA.)
B	2 1/4" X 2 1/4" X 2' (12 GA.)
C	2 " X 2" X VARIES (12 GA.)

SIGN SUPPORT (SPECIAL) DETAIL

MODEL: Sign Support Deatlls
FILE NAME: J:\2021\6084\Cadd\Design\CAD_Sheets\D978884-sht-sign support special detail.dgn

ABNA DESIGN FIRM REG. 184.002117
745 McClintock Drive
Suite 210
Burr Ridge, IL 60527
Ph. 773-881-4788
Fax: 773-239-3728

USER NAME = muddin	DESIGNED - HH	REVISED -	
	DRAWN - IG	REVISED -	
PLOT SCALE = 0.16670000 ' / in.	CHECKED - HH	REVISED -	
PLOT DATE = 10/11/2024	DATE -	REVISED -	

STATE OF ILLINOIS
DEPARTMENT OF TRANSPORTATION

SIGN SUPPORT (SPECIAL) DETAILS

SCALE: NTS | SHEET 1 OF 9 SHEETS | STA. TO STA.

F.A.I. RTE.	SECTION	COUNTY	TOTAL SHEETS	SHEET NO.
57	(28-2)B-2; (28-1)B-2	VARIOUS	598	217
		CONTRACT NO. 78884		
		ILLINOIS	FED. AID PROJECT	

SIGN DETAIL

WIDTH x HGHT.	10'-6" x 12'
BORDER WIDTH	2"
CORNER RADIUS	12"
MOUNTING	Overhead
BACKGROUND	TYPE: Reflective-ZZ
	COLOR: Green
LEGEND/BORDER	TYPE: Reflective-ZZ
	COLOR: White

SYMBOL	ROT	X	Y	WID	HT
M1-I100A-3-22-10D	0	40.5	96	45	36

Panel Style:guide_fwy_overhead.ssi
Dimensions are in Inches (")

LETTER WIDTHS AND SPACES																																SERIES/SIZE
	E		X		I		T		7		7																					E 2000
37.9	7.5	1.7	8.7	2.4	1.8	2	7.5	15	12.2	2.1	12.2	15																				10,15
	S		e		s		s		e		r																					EM 2000
22.2	13	3.5	10.6	3.2	10.6	3.2	10.6	3.5	10.6	4.9	8	22.2																				16/12
	1		M		I		L		E																							E 2000
36.7	4.5	15	9.4	2.6	1.8	2.6	7.5	1.7	7.5	36.7																						15,10

SIGN DETAIL

WIDTH x HGHT.	11'-0" x 5'-6"
BORDER WIDTH	2"
CORNER RADIUS	9"
MOUNTING	Overhead
BACKGROUND	TYPE: Reflective-ZZ
	COLOR: Blue
LEGEND/BORDER	TYPE: Reflective-ZZ
	COLOR: White

SYMBOL	ROT	X	Y	WID	HT
AR_Type D	315	55.3	10.5	18	27

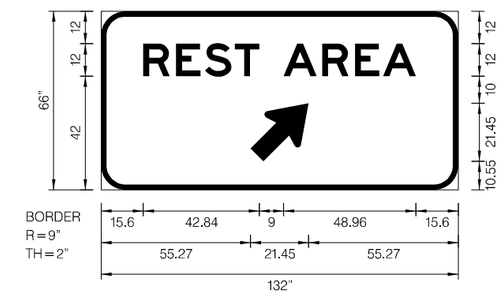

Panel Style:guide_fwy_rest-scenic.ssi
Dimensions are in Inches (")

LETTER WIDTHS AND SPACES																																SERIES/SIZE
	R		E		S		T		A		R		E		A																	E 2000
15.6	9.7	2.4	9	1.7	9.7	1.3	9	9	12.2	2.1	9.7	2.4	9	1.3	12.2	15.6																12

MODEL: Sign Deatils-1 [Sheet]
FILE NAME: J:\20221604\CadotDesign\CAD_Sheets\D978884-sht-sign_details.dgn

ABNA DESIGN FIRM REG. 184.002117
745 McClintock Drive
Suite 210
Burr Ridge, IL 60527
Ph. 773-881-4788
Fax: 773-239-3728

USER NAME = ighimire	DESIGNED - IG	REVISED -	STATE OF ILLINOIS DEPARTMENT OF TRANSPORTATION
	DRAWN - IG	REVISED -	
PLOT SCALE = 0.16670000 ' / in.	CHECKED - HH	REVISED -	
PLOT DATE = 6/14/2024	DATE -	REVISED -	

SIGN DETAILS

SCALE: NTS | SHEET 2 OF 9 SHEETS | STA. TO STA.

F.A.I RTE.	SECTION	COUNTY	TOTAL SHEETS	SHEET NO.
57	(28-2)B-2; (28-1)B-2	FRANKLIN	598	218
		CONTRACT NO. 78884		
	ILLINOIS	FED. AID PROJECT		

SIGN DETAIL

WIDTH x HGHT.	11'–0" x 5'–0"	
BORDER WIDTH	2"	
CORNER RADIUS	8"	
MOUNTING	Ground	
BACKGROUND	TYPE:	Reflective–ZZ
	COLOR:	Blue
LEGEND/BORDER	TYPE:	Reflective–ZZ
	COLOR:	White

SYMBOL	ROT	X	Y	WID	HT

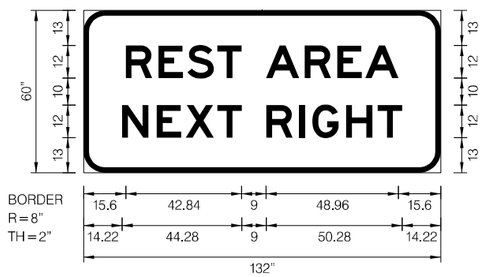

Panel Style: guide_fwy_rest–scenic.ssi
Dimensions are in Inches (")

LETTER WIDTHS AND SPACES																													SERIES/SIZE
	R		E		S		T		A		R		E		A														E 2000
15.6	9.7	2.4	9	1.7	9.7	1.3	9	9	12.2	2.1	9.7	2.4	9	1.3	12.2	15.6													12
	N		E		X		T		R		I		G		H		T												E 2000
14.2	9.7	3.8	9	1.7	10.4	1.4	9	9	9.7	2.4	2.2	2.7	9.7	2.8	9.7	2.1	9	14.2											12

SIGN DETAIL

WIDTH x HGHT.	10'–0" x 2'–0"	
BORDER WIDTH	1.5"	
CORNER RADIUS	3"	
MOUNTING	Ground	
BACKGROUND	TYPE:	Reflective–ZZ
	COLOR:	Blue
LEGEND/BORDER	TYPE:	Reflective–ZZ
	COLOR:	Black

SYMBOL	ROT	X	Y	WID	HT

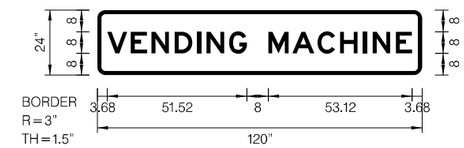

Panel Style: guide_fwy_rest–scenic.ssi
Dimensions are in Inches (")

LETTER WIDTHS AND SPACES																													SERIES /SIZE
	V		E		N		D		I		N		G		M		A		C		H		I		N		E		E 2000
3.7	7.4	1.3	6	1.6	6.5	2.1	6.5	1.8	1.4	2.1	6.5	1.8	6.5	8	7.5	1.4	8.2	1.1	6.5	1.8	6.5	2.1	1.4	2.1	6.5	2.1	6	3.7	8

MODEL: Sign Deatils-2 [Sheet]
FILE NAME: J:\20216084\CadotDesign\CAD_Sheets\D978884-sht-sign_details.dgn

ABNA DESIGN FIRM REG. 184.002117
745 McClintock Drive
Suite 210
Burr Ridge, IL 60527
Ph. 773-481-4788
Fax: 773-239-3728

USER NAME = muddin	DESIGNED - IG	REVISED -	
	DRAWN - IG	REVISED -	
PLOT SCALE = 0.16670000 ' / in.	CHECKED - HH	REVISED -	
PLOT DATE = 6/24/2024	DATE -	REVISED -	

STATE OF ILLINOIS
DEPARTMENT OF TRANSPORTATION

SIGN DETAILS

SCALE: NTS | SHEET 3 OF 9 SHEETS | STA. | TO STA.

F.A.I RTE.	SECTION	COUNTY	TOTAL SHEETS	SHEET NO.
57	(28-2)B-2; (28-1)B-2	FRANKLIN	598	219
		CONTRACT NO. 78884		
	ILLINOIS	FED. AID PROJECT		

SIGN DETAIL

WIDTH x HGHT.	13'-0" x 10'-6"
BORDER WIDTH	2"
CORNER RADIUS	12"
MOUNTING	Gorund
BACKGROUND	TYPE: Reflective-ZZ
	COLOR*: Blue, Brown
LEGEND/BORDER	TYPE: Reflective-ZZ
	COLOR: White

SYMBOL	ROT	X	Y	WID	HT

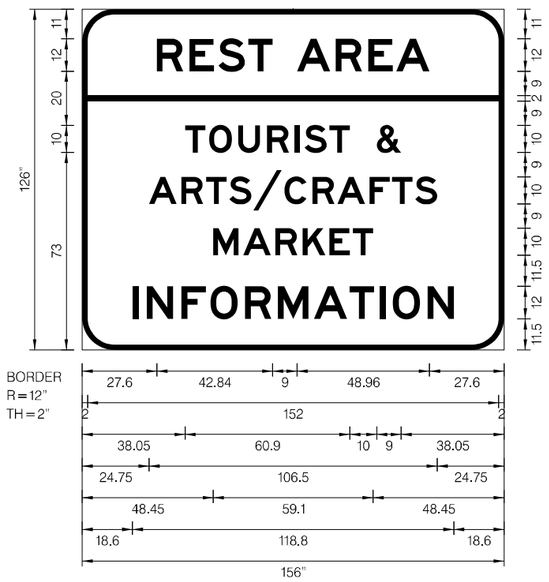

*
Note: REST AREA shall have Blue Background
SCENIC INFORMATION shall have Brown Background

Panel Style: guide_fwy_general-services.ssi
Dimensions are in Inches (")

LETTER WIDTHS AND SPACES																												SERIES-SIZE
	R		E		S		T		A		R		E		A													E 2000
27.6	9.7	2.4	9	1.7	9.7	1.3	9	9	12.2	2.1	9.7	2.4	9	1.3	12.2	27.6												12
	T		O		U		R		I		S		T		&													E 2000
38.1	7.5	1.4	8.4	2.3	8.1	2.6	8.1	2	1.8	2	8.1	1.1	7.5	10	9	38.1												10
	A		R		T		S		/		C		R		A		F		T		S							E 2000
24.8	10.2	1.7	8.1	1.1	7.5	1.1	8.1	0.7	10.5	1	8.1	2.3	8.1	1.1	10.2	1.7	7.5	0.8	7.5	1.1	8.1	24.8						10
	M		A		R		K		E		T																	E 2000
48.5	9.4	1.7	10.2	1.7	8.1	1.1	8.3	1.6	7.5	1.1	7.5	48.5																10
	I		N		F		O		R		M		A		T		I		O		N							E 2000
18.6	2.2	3.1	9.7	3.1	9	1.7	10.1	2.7	9.7	2.4	11.3	2	12.2	1	9	2	2.2	2.7	10.1	2.7	9.7	18.6						12

SIGN DETAIL

WIDTH x HGHT.	15'-0" x 6'-0"
BORDER WIDTH	2"
CORNER RADIUS	9"
MOUNTING	Ground
BACKGROUND	TYPE: Reflective-ZZ
	COLOR: Blue
LEGEND/BORDER	TYPE: Reflective-ZZ
	COLOR: White

SYMBOL	ROT	X	Y	WID	HT
LOGO36X60	0	20	9	60	36
LOGO36X60	0	100	9	60	36

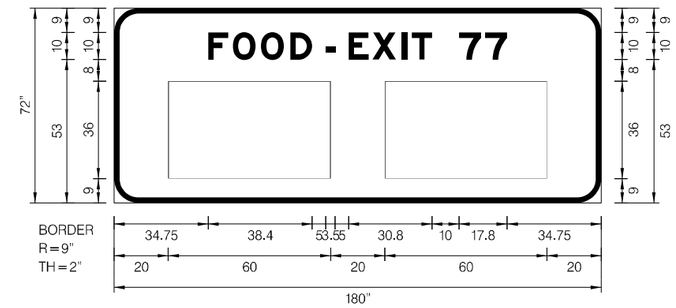

Panel Style: CUSTOM FWY GS.ssi
Dimensions are in Inches (")

LETTER WIDTHS AND SPACES																												SERIES-SIZE
	F		O		O		D		-		E		X		I		T		7		7							EM 2000
	7.4	1.7	8.4	2	8.4	2.4	8.1	5	3.5	5	7.4	1.4	8.7	2.1	2	1.8	7.4	10	8.1	1.6	8.1							10

MODEL: Sign Details-3 [Sheet]
FILE NAME: J:\2021\60841\Cadd\Design\CAD_Sheets\D978884-sht-sign_details.dgn

ABNA DESIGN FIRM REG. 184.002117
745 McClintock Drive
Suite 210
Burr Ridge, IL 60527
Ph. 773-681-4788
Fax: 773-239-0726

USER NAME = ighimire	DESIGNED - IG	REVISED -	
	DRAWN - IG	REVISED -	
PLOT SCALE = 0.16670000 ' / in.	CHECKED - HH	REVISED -	
PLOT DATE = 6/14/2024	DATE -	REVISED -	

STATE OF ILLINOIS
DEPARTMENT OF TRANSPORTATION

SIGN DETAILS

SCALE: NTS | SHEET 4 OF 9 SHEETS | STA. | TO STA.

F.A.I RTE.	SECTION	COUNTY	TOTAL SHEETS	SHEET NO.
57	(28-2)B-2; (28-1)B-2	FRANKLIN	598	220

CONTRACT NO. 78884

ILLINOIS | FED. AID PROJECT

SIGN DETAIL

WIDTH x HGHT.	15'-0" x 6'-0"
BORDER WIDTH	2"
CORNER RADIUS	9"
MOUNTING	Ground
BACKGROUND	TYPE: Reflective-ZZ
	COLOR: Blue
LEGEND/BORDER	TYPE: Reflective-ZZ
	COLOR: White

SYMBOL	ROT	X	Y	WID	HT
LOGO36X60	0	20	9	60	36
LOGO36X60	0	100	9	60	36

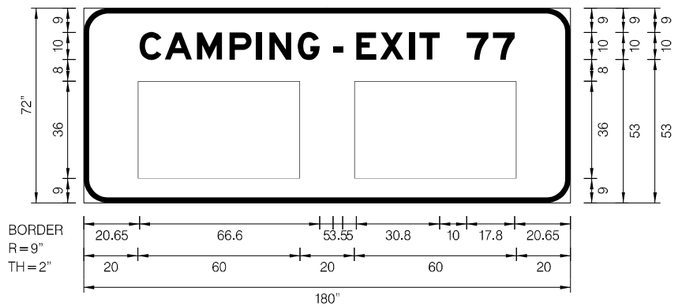

Panel Style: CUSTOM FWY GS.ssi
Dimensions are in Inches (")

LETTER WIDTHS AND SPACES																												SERIES /SIZE
	C		A		M		P		I		N		G		-		E		X		I		T		7		7		EM 2000
20.7	8.1	1.2	10.1	1.8	9.3	2.8	8.1	1.8	2	22.8	8.1	2.4	8.1	5	3.5	5	7.4	1.4	8.7	2.1	2	1.8	7.4	10	8.1	1.6	8.1	20.6	10

MODEL: Sign Deatils-4 [Sheet]
FILE NAME: J:\2021\6084\CadotDesign\CAD_Sheets\D978884-sht-sign_details.dgn

ABNA DESIGN FIRM REG. 184.002117
745 McClintock Drive
Suite 210
Burr Ridge, IL 60527
Ph. 773-481-4788
Fax: 773-239-3728

USER NAME = aadhikari	DESIGNED - IG	REVISED -
	DRAWN - IG	REVISED -
PLOT SCALE = 0.16670000 ' / in.	CHECKED - HH	REVISED -
PLOT DATE = 9/3/2024	DATE -	REVISED -

STATE OF ILLINOIS
DEPARTMENT OF TRANSPORTATION

SIGN DETAILS

SCALE: NTS | SHEET 5 OF 9 SHEETS | STA. | TO STA.

F.A.I RTE.	SECTION	COUNTY	TOTAL SHEETS	SHEET NO.
57	(28-2)B-2; (28-1)B-2	FRANKLIN	598	221
		CONTRACT NO. 78884		
	ILLINOIS	FED. AID PROJECT		

SIGN DETAIL

WIDTH x HGHT.	15'-0" x 6'-0"	
BORDER WIDTH	2"	
CORNER RADIUS	9"	
MOUNTING	Ground	
BACKGROUND	TYPE:	Reflective-ZZ
	COLOR:	Blue
LEGEND/BORDER	TYPE:	Reflective-ZZ
	COLOR:	White

SYMBOL	ROT	X	Y	WID	HT
LOGO36X60	0	20	9	60	36
LOGO36X60	0	100	9	60	36

Panel Style: CUSTOM FWY GS.ssi
Dimensions are in Inches (")

LETTER WIDTHS AND SPACES																												SERIES/SIZE
	F		O		O		D		-		E		X		I		T		8		3							EM 2000
	7.4	1.7	8.4	2	8.4	2.4	8.1	5	3.5	5	7.4	1.4	8.7	2.1	2	1.8	7.4	10	8.1	1.5	8.1							10

SIGN DETAIL

WIDTH x HGHT.	15'-0" x 6'-0"	
BORDER WIDTH	2"	
CORNER RADIUS	9"	
MOUNTING	Ground	
BACKGROUND	TYPE:	Reflective-ZZ
	COLOR:	Blue
LEGEND/BORDER	TYPE:	Reflective-ZZ
	COLOR:	White

SYMBOL	ROT	X	Y	WID	HT
LOGO36X48	0	10	9	48	36
LOGO36X48	0	66	9	48	36
LOGO36X48	0	122	9	48	36

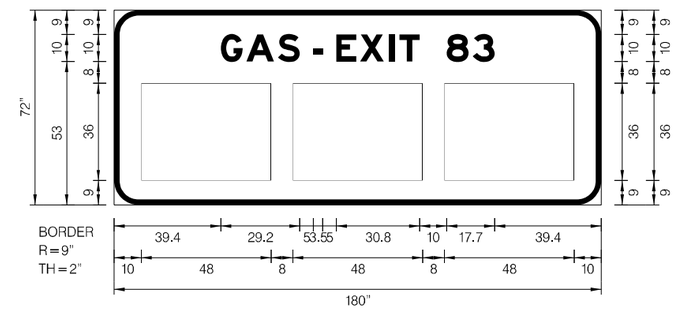

Panel Style: CUSTOM FWY GS.ssi
Dimensions are in Inches (")

LETTER WIDTHS AND SPACES																												SERIES/SIZE
	G		A		S		-		E		X		I		T		8		3									EM 2000
39.4	8.1	1.4	10.1	1.5	8.1	5	3.5	5	7.4	1.4	8.7	2.1	2	1.8	7.4	10	8.1	1.5	8.1	39.4								10

MODEL: Sign Deatils-5 [Sheet]
FILE NAME: J:\2021\6084\CadotDesign\CAD_Sheets\D978884-sht-sign_details.dgn

ABNA DESIGN FIRM REG. 184.002117
745 McClintock Drive
Suite 210
Burr Ridge, IL 60527
Ph. 773-881-4788
Fax: 773-239-3728

USER NAME = aadhikari	DESIGNED - IG	REVISED -	
	DRAWN - IG	REVISED -	
PLOT SCALE = 0.16670000 ' / in.	CHECKED - HH	REVISED -	
PLOT DATE = 9/3/2024	DATE -	REVISED -	

STATE OF ILLINOIS
DEPARTMENT OF TRANSPORTATION

SIGN DETAILS

SCALE: NTS | SHEET 6 OF 9 SHEETS | STA. | TO STA.

F.A.I RTE.	SECTION	COUNTY	TOTAL SHEETS	SHEET NO.
57	(28-2)B-2; (28-1)B-2	JEFFERSON	598	222
		CONTRACT NO. 78884		
	ILLINOIS	FED. AID PROJECT		

SIGN DETAIL

WIDTH x HGHT.	9'-6" x 8'-0"
BORDER WIDTH	2"
CORNER RADIUS	12"
MOUNTING	Ground
BACKGROUND	TYPE: Reflective-ZZ
	COLOR: Green
LEGEND/BORDER	TYPE: Reflective-ZZ
	COLOR: White

SYMBOL	ROT	X	Y	WID	HT

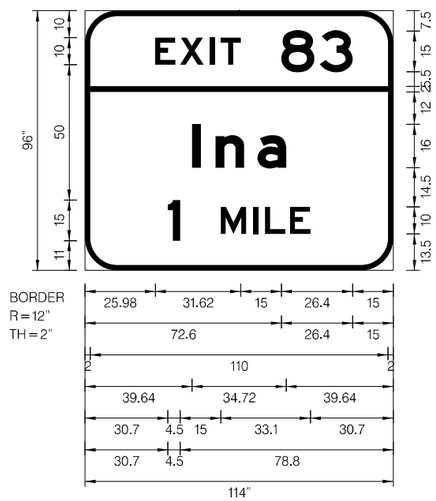

Panel Style: guide_fwy_intermediate.ssi
Dimensions are in Inches (")

LETTER WIDTHS AND SPACES																												SERIES/SIZE
	E		X		I		T		8		3																	E 2000
26	7.5	1.7	8.7	2.4	1.8	2.0	7.5	15	12.2	2	12.2	15																10,15
	I		n		a																							EM 2000
39.6	3.2	5.4	10.6	4.9	10.6	39.6																						16/12
	1		M		I		L		E																			E 2000
30.7	4.5	15	9.4	2.6	1.8	2.6	7.5	1.7	7.5	30.7																		15,10

SIGN DETAIL

WIDTH x HGHT.	13'-0" x 7'-0"
BORDER WIDTH	2"
CORNER RADIUS	11"
MOUNTING	Ground
BACKGROUND	TYPE: Reflective-ZZ
	COLOR: Green
LEGEND/BORDER	TYPE: Reflective-ZZ
	COLOR: White

SYMBOL	ROT	X	Y	WID	HT

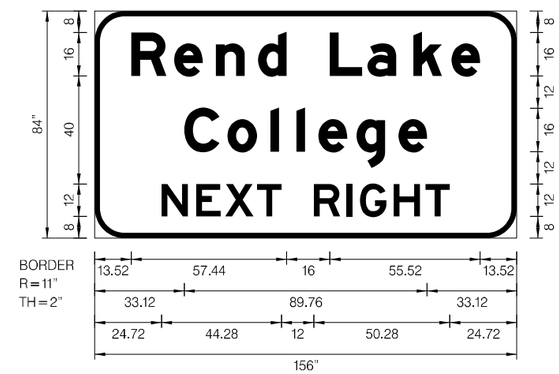

Panel Style: guide_fwy_supplemental.ssi
Dimensions are in Inches (")

LETTER WIDTHS AND SPACES																												SERIES/SIZE
	R		e		n		d		L		a		k		e													EM 2000
13.5	13	2.8	10.6	4.9	10.6	4.9	10.6	16	11.8	2.1	10.6	6.4	10.6	3.5	10.6	13.5												16/12
	C		o		I		I		e		g		e															EM 2000
33.1	13	3	10.9	4.9	3.2	6.4	3.2	5	10.6	3.5	10.6	4.9	10.6	33.1														16/12
	N		E		X		T		R		I		G		H		T											E 2000
24.7	9.7	3.1	9	1.7	10.4	1.4	9	12	9.7	2.4	2.2	2.7	9.7	2.8	9.7	2.1	9	24.7										12

MODEL: Sign Deatils-6 [Sheet]
FILE NAME: J:\2021\60841\Cadd\Design\CAD_Sheets\D978884-sht-sign_details.dgn

ABNA DESIGN FIRM REG. 184.002117
745 McClintock Drive
Suite 210
Burr Ridge, IL 60527
Ph. 773-681-4788
Fax: 773-239-3728

USER NAME = aadhikari	DESIGNED - IG	REVISED -
	DRAWN - IG	REVISED -
PLOT SCALE = 0.16670000 ' / in.	CHECKED - HH	REVISED -
PLOT DATE = 9/3/2024	DATE -	REVISED -

STATE OF ILLINOIS
DEPARTMENT OF TRANSPORTATION

SIGN DETAILS

SCALE: NTS | SHEET 7 OF 9 SHEETS | STA. TO STA.

F.A.I RTE.	SECTION	COUNTY	TOTAL SHEETS	SHEET NO.
57	(28-2)B-2; (28-1)B-2	JEFFERSON	598	223

CONTRACT NO. 78884

ILLINOIS | FED. AID PROJECT

SIGN DETAIL

WIDTH x HGHT.	9'-6" x 8'-0"
BORDER WIDTH	2"
CORNER RADIUS	12"
MOUNTING	Ground
BACKGROUND	TYPE: Reflective-ZZ
	COLOR: Green
LEGEND/BORDER	TYPE: Reflective-ZZ
	COLOR: White

SYMBOL	ROT	X	Y	WID	HT

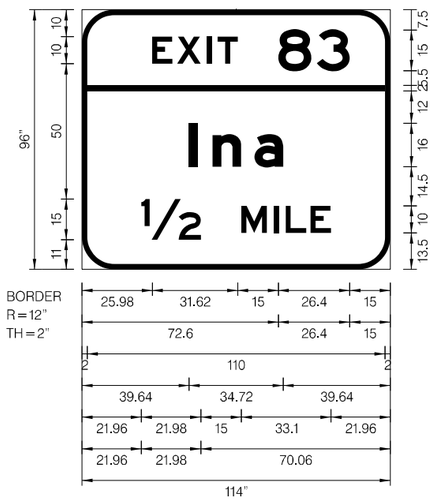

Panel Style: guide_fwy_intermediate.ssi
Dimensions are in Inches (")

LETTER WIDTHS AND SPACES																															SERIES/SIZE
	E		X		I		T		8		3																				E 2000
26	7.5	1.7	8.7	2.4	1.8	2	7.5	15	12.2	2	12.2	15																			10,15
	I		n		a																										EM 2000
39.6	3.2	5.4	10.6	4.9	10.6	39.6																									16/12
	1/2		M		I		L		E																						E 2000
22	22	15	9.4	2.6	1.8	2.6	7.5	1.7	7.5	22																					15,10

SIGN DETAIL

WIDTH x HGHT.	9'-6" x 8'-6"
BORDER WIDTH	2"
CORNER RADIUS	12"
MOUNTING	Ground
BACKGROUND	TYPE: Reflective-ZZ
	COLOR: Green
LEGEND/BORDER	TYPE: Reflective-ZZ
	COLOR: White

SYMBOL	ROT	X	Y	WID	HT
Exit Arrow (Type A) 2012	315	43	8	22.2	35.6

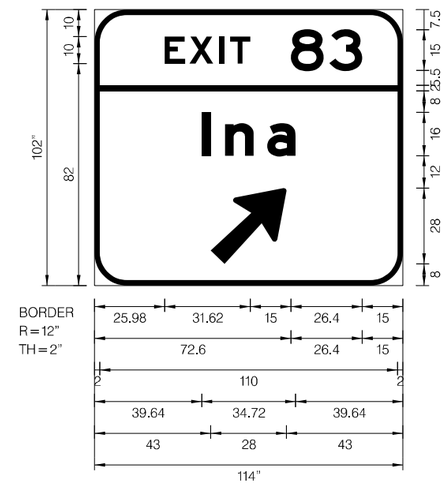

Panel Style: guide_fwy_intermediate.ssi
Dimensions are in Inches (")

LETTER WIDTHS AND SPACES																															SERIES/SIZE
	E		X		I		T		8		3																				E 2000
26	7.5	1.7	8.7	2.4	1.8	2.0	7.5	15	12.2	2	12.2	15																			10,15
	I		n		a																										EM 2000
39.6	3.2	5.4	10.6	4.9	10.6	39.6																									16/12

MODEL: Sign Details-7 [Sheet]
FILE NAME: J:\2021\60841\Cadd\Design\CAD_Sheets\D978884-sht-sign_details.dgn

ABNA DESIGN FIRM REG. 184.002117
745 McClintock Drive
Suite 210
Burr Ridge, IL 60527
Ph. 773-581-4788
Fax: 773-239-3726

USER NAME = ighimire	DESIGNED - IG	REVISED -	
	DRAWN - IG	REVISED -	
PLOT SCALE = 0.16670000 ' / in.	CHECKED - HH	REVISED -	
PLOT DATE = 6/14/2024	DATE -	REVISED -	

STATE OF ILLINOIS
DEPARTMENT OF TRANSPORTATION

SIGN DETAILS

SCALE: NTS | SHEET 8 OF 9 SHEETS | STA. | TO STA.

F.A.I RTE.	SECTION	COUNTY	TOTAL SHEETS	SHEET NO.
57	(28-2)B-2; (28-1)B-2	JEFFERSON	598	224
		CONTRACT NO. 78884		
	ILLINOIS	FED. AID PROJECT		

SIGN DETAIL

WIDTH x HGHT.	6'-6" x 5'-0"
BORDER WIDTH	1.5"
CORNER RADIUS	6"
MOUNTING	Ground
BACKGROUND	TYPE: Reflective-ZZ
	COLOR: Green
LEGEND/BORDER	TYPE: Reflective-ZZ
	COLOR: White

SYMBOL	ROT	X	Y	WID	HT
Gore Arrow 2012	315	49.3	6.3	18.2	29.3

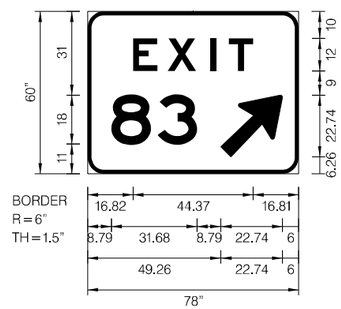

Panel Style: guide_fwy_gore_R_2012.ssi
Dimensions are in Inches (")

LETTER WIDTHS AND SPACES																										SERIES/SIZE
	E		X		I		T																			E 2000
16.8	9	3.8	10.4	5.4	2.2	4.6	9	16.8																		12
	8		3																							E 2000
8.8	14.6	2.5	14.6																							18

MODEL: Sign Details-8 [Sheet]
FILE NAME: J:\2021\6084\CadotDesign\CAD_Sheets\D978884-sht-sign_details.dgn

ABNA DESIGN FIRM REG. 184.002117
745 McClintock Drive
Suite 210
Burr Ridge, IL 60527
Ph. 773-881-4798
Fax: 773-239-3728

USER NAME = ighimire	DESIGNED - IG	REVISED -	STATE OF ILLINOIS DEPARTMENT OF TRANSPORTATION
	DRAWN - IG	REVISED -	
PLOT SCALE = 0.16670000 ' / in.	CHECKED - HH	REVISED -	
PLOT DATE = 6/14/2024	DATE -	REVISED -	

SIGN DETAILS

SCALE: NTS | SHEET 9 OF 9 SHEETS | STA. | TO STA.

F.A.I RTE.	SECTION	COUNTY	TOTAL SHEETS	SHEET NO.
57	(28-2)B-2; (28-1)B-2	JEFFERSON	598	225
		CONTRACT NO. 78884		
	ILLINOIS	FED. AID PROJECT		

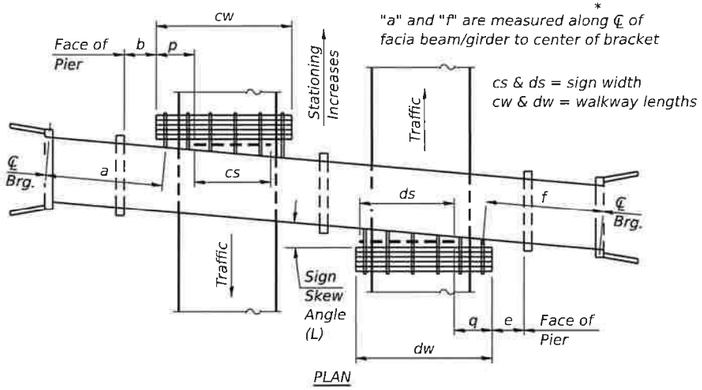

(Left Sign Skew > 15°)

WALKWAY AND HANDRAIL SKETCH

(Road plan beneath structure varies.)

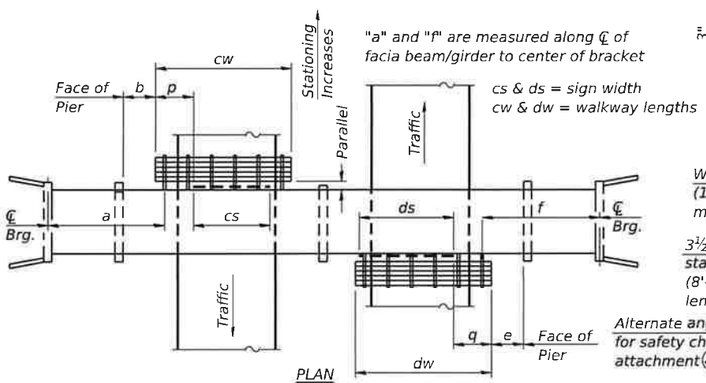

(For Sign Skew ≤ 15°, all brackets constant)

WALKWAY AND HANDRAIL SKETCH

(Road plan beneath structure varies.)

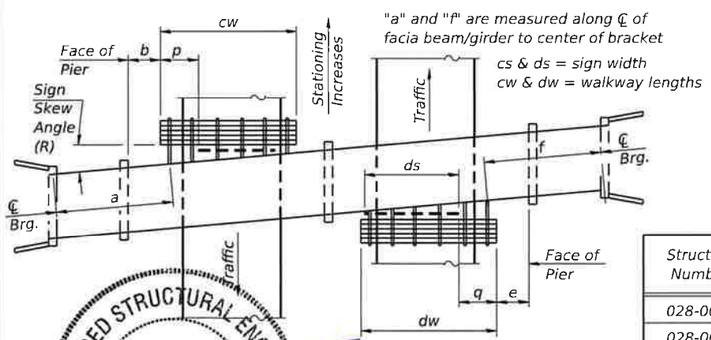

(Right Sign Skew > 15°)

WALKWAY AND HANDRAIL SKETCH

(Road plan beneath structure varies.)

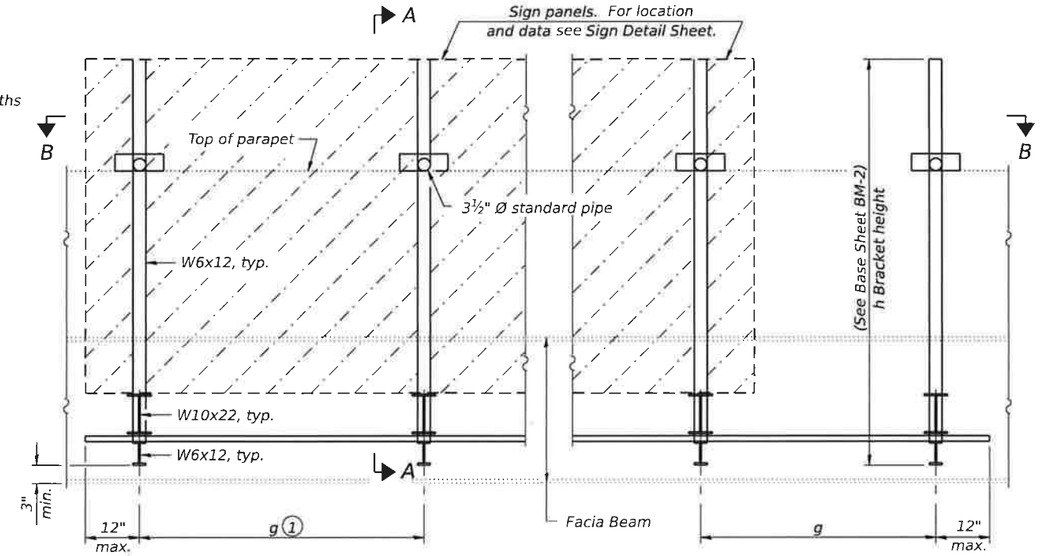

TYPICAL FRONT ELEVATION

(With lights, safety chain and handrail omitted for clarity.)

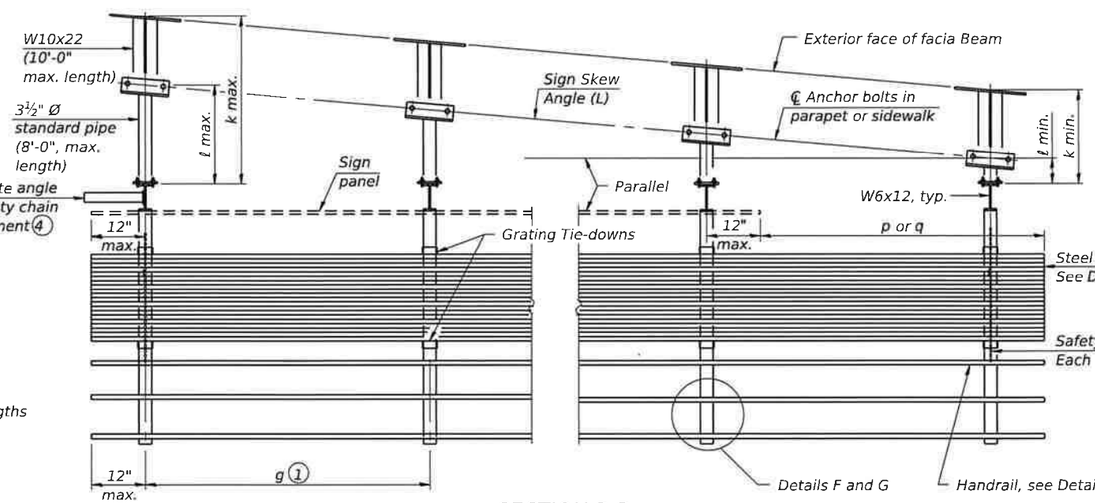

SECTION B-B

(Shown: Left Sign Skew>15°)

Structure Number	Sign Skew Angle (L) or (R)	Bridge Station	Bridge Structure Number	Contract Route Designation	a	b	cs	cw	ds	dw	e	f	g	No. of Brackets (Total)	p	q	Total Grating/ Hndrl. Lengths (cw + dw)
028-0055	0	9+78.11		TR-3	88	39	4	-	4	-	39	88	3	4	-	-	0
028-0059	0	176+52.10		IL 154	82	39	4	-	4	-	39	82	3	4	-	-	0
028-0056	L 14°55'	229+54.5		TR-75	84	41	4	-	4	-	41	84	3	4	-	-	0
028-0053	0	283+35.75		SART 19	82	40	4	-	4	-	40	82	3	4	-	-	0
041-0113	R 5°	117+09.55		CH 42	81	-	4	-	4	-	-	81	3	4	-	-	0

Dimensions a, b, e, f & g may vary as approved by the Engineer, see (1).
When cw < cs and/or dw < ds, use alternate brackets without walkway supports where applicable, see (3).

GENERAL NOTES

SPECIFICATIONS:

DESIGN: AASHTO Standard Specifications for Structural Supports for (2) Highway Signs, Luminaires and Traffic Signals. ("AASHTO Specifications")

CONSTRUCTION: Current (at time of letting) Illinois Department of Transportation Standard Specifications for Road and Bridge Construction, Supplemental Specifications and Special Provisions. ("Standard Specifications")

LOADING: 90 M.P.H. WIND VELOCITY

WALKWAY LOADING: Dead load plus 500 lbs. concentrated live load.

MINIMUM CLEARANCE: 3" greater than bridge members at all locations. (All Obstructions)

WELDING: All welds to be continuous unless otherwise shown. All welding to be done in accordance with current AWS D1.1 Structural Welding Code (Steel) and the Standard Specificiations.

MATERIALS: All Structural Steel Pipe shall be ASTM A53 Grade B with a minimum yield of 35,000 p.s.i., or A500 Grade B or C with a minimum yield of 46,000 p.s.i. If A500 pipe is substituted for A53, then the outside diameter shall be as detailed and wall thickness greater than or equal to A53. All Structural Steel Plates and Shapes shall conform to AASHTO M270 Gr. 36, Gr. 50 (M183, M223 Gr. 50,).

HIGH STRENGTH BOLTS: All bolts, washers, nuts and locknuts shall satisfy the requirements of ASTM designation A307 unless noted as "H.S." which shall require AASHTO M164 (A325), ASTM A449, or approved alternate. All fasteners shall be hot dip galvanized per AASHTO M232 unless otherwise specified.

GALVANIZING: All Steel Grating, Plates, Shapes and Pipe shall be Hot Dip Galvanized after fabrication in accordance with AASHTO M111. Painting is not permitted.

ANCHOR RODS: All-threaded rod shall conform to ASTM F1554 Grade 105, ¾" Ø x 12" long, each with one plate washer and locknut and be hot dip galvanized per AASHTO M232. They shall be either cast into the concrete or epoxy grouted in accordance with Section 584 of the Standard Specifications. Minimum embedment in concrete shall be 9".

(1) Bracket spacing g ≤ 6'-0", max. Spacing shall be uniform if possible but may vary ±6" to miss existing obstruction (rail post, light poles, web stiffeners, splice plates, etc.). Adjust bracket lengths accordingly on skewed structures.

(2) Any design modifications shall be based on the current version of applicable specifications and submitted for the Engineer's approval.

(3) Unit price includes grating, handrail, brackets, supports, anchor bolts, fasteners, fabrication, delivery, erection, field drilling and other necessary items. Limits of payment are based on grating length (cw, dw) unless otherwise specified. For Safety Chain Details and Details D, F and G, see Base Sheet BM-4.

(4) If walkway bracket at safety chain location is behind sign, add angle to bracket. See detail on Base Sheet BM-4.

TOTAL BILL OF MATERIAL

(3) OVERHEAD SIGN STRUCTURE-BRIDGE MOUNTED	Foot	40

LICENSED STRUCTURAL ENGINEER STEPHEN E. SCHUBERT 10-22-24 STATE OF ILLINOIS

Exp 11-30-2026

BM-1 5-15-2023

MODEL: Default
FILE NAME: J:\2021\6084\Cadd\Design\CAD_Sheets\OHSS SHEETS\D978884-016-OHSS DETAILS.dgn

ABNA DESIGN FIRM REG. 184.002117

USER NAME =	DESIGNED - SEA	REVISED -	
	CHECKED - CG	REVISED -	
PLOT SCALE =	DRAWN - MBJ	REVISED -	
PLOT DATE =	CHECKED - SEA	REVISED -	

STATE OF ILLINOIS
DEPARTMENT OF TRANSPORTATION

BRIDGE MOUNT SIGN STRUCTURES
GENERAL PLAN AND ELEVATION

SHEET 16 OF 18 SHEETS

F.A.I. RTE.	SECTION	COUNTY	TOTAL SHEETS	SHEET NO.
57	(28-2)B-2; (28-1)B-2	FRANKLIN	598	226
		CONTRACT NO. 78884		
	ILLINOIS	FED. AID PROJECT		

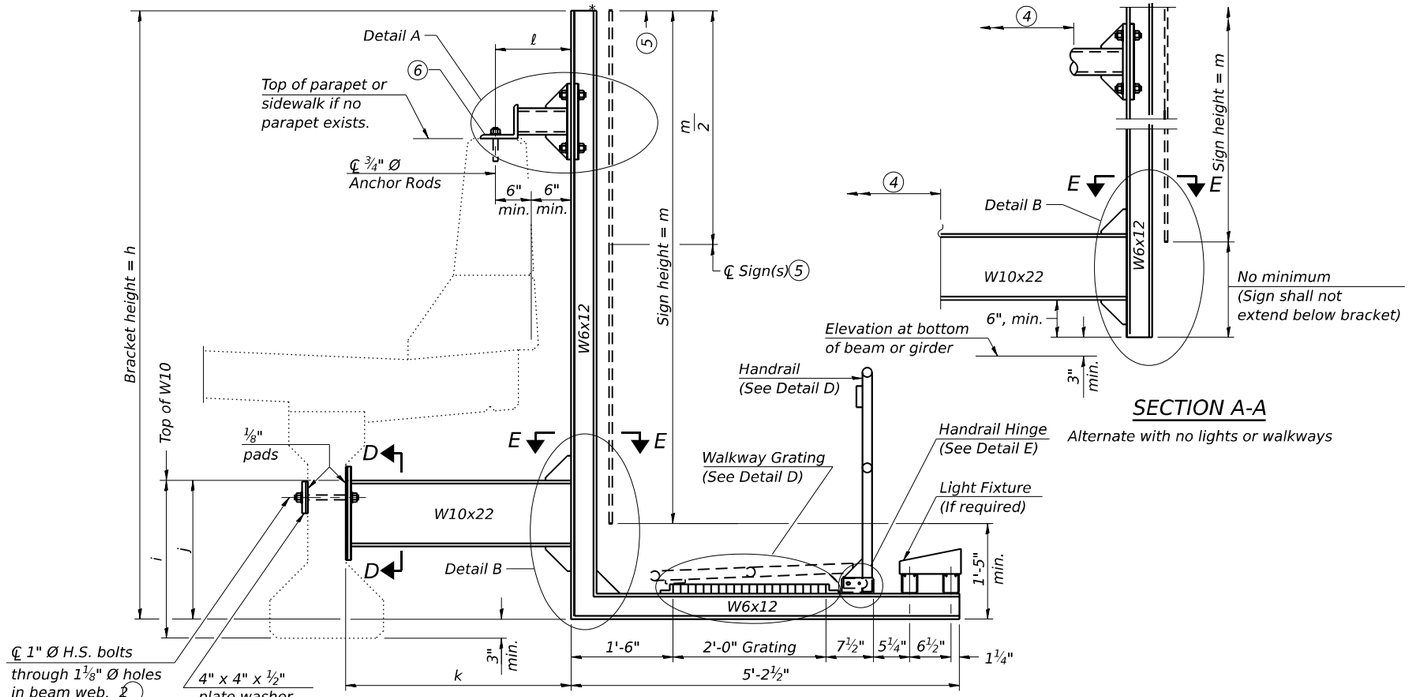

SECTION A-A

Details for mounting to PPC I Beam or Bulb "T" & Details for mounting to parapet w/o rail

SECTION A-A

Alternate with no lights or walkways

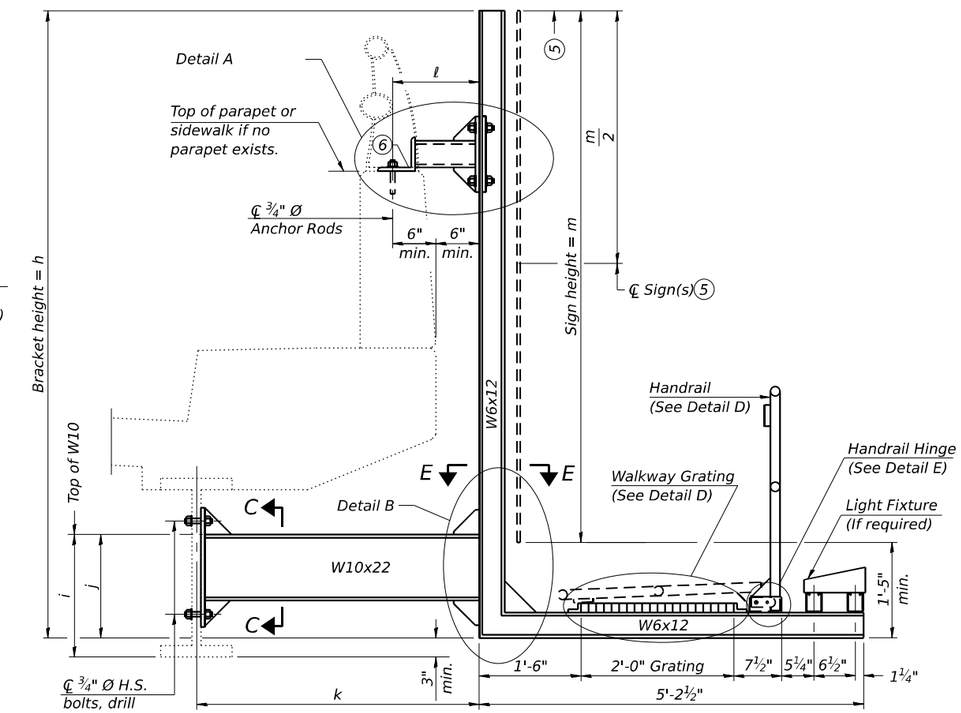

SECTION A-A

Details for mounting to steel beam or girder & Details for mounting with existing parapet mounted rail

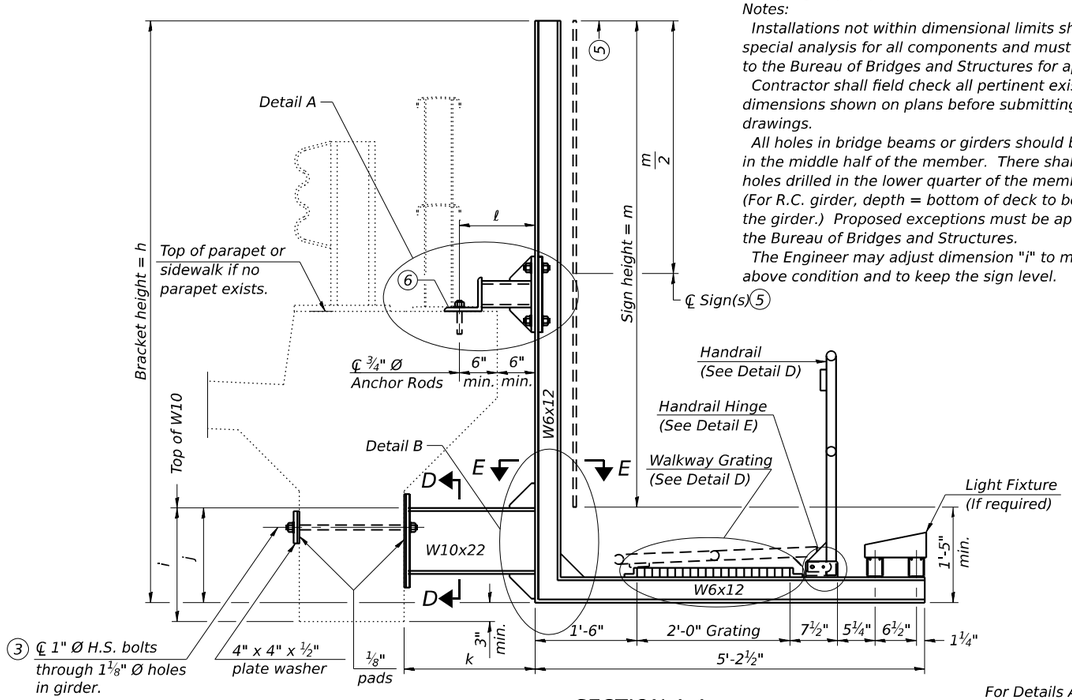

SECTION A-A

Details for mounting to integral reinforced concrete girder & Details for mounting on safety curb with surface-mount bridge rail

Notes:

Installations not within dimensional limits shown require special analysis for all components and must be submitted to the Bureau of Bridges and Structures for approval.

Contractor shall field check all pertinent existing bridge dimensions shown on plans before submitting shop drawings.

All holes in bridge beams or girders should be located in the middle half of the member. There shall be no holes drilled in the lower quarter of the member's depth. (For R.C. girder, depth = bottom of deck to bottom of the girder.) Proposed exceptions must be approved by the Bureau of Bridges and Structures.

The Engineer may adjust dimension "j" to meet the above condition and to keep the sign level.

1. Holes in new steel members may be drilled in the fabrication shop or in the field. Field drill existing members.

2. For new PPC I beams, holes shall be formed during casting. For existing PPC I beams, prestressing strand locations shall be determined and spaced to miss strands by 6", min. Minimize spalling during field drilling of existing beams.

3. For new construction, form holes. For existing RC beams, locate primary reinforcement and space holes to miss by 6", min. Minimize spalling and concrete fracturing/damage during field drilling of existing concrete. Spalls over ¼" deep or beyond the coverage of the 4x4 plate washer shall be repaired with epoxy mortar before installing washer.

4. For attachment details of 3½" pipe and W10x22, see other sections as applicable.

5. Sign shall not extend more than 6" above top of bracket, and this dimension may vary to keep sign level if bridge is on grade or vertical curve. Multiple signs of various heights shall share a common horizontal centerline and use equal bracket heights. If no sign is attached to a W6x12 vertical (bracket only supporting walkway), dimension h shall be the same as an adjacent bracket with a sign attached, unless Engineer specifically directs shorter brackets due to locational restraints on future uses. (See Detail A for minimum bracket height.)

6. For bridge mounted sign structures installed on new bridges with railing, during design, bracket spacing must be coordinated with railing post spacing and the Contractor must install upper brackets prior to railing installation. For bridge mounted sign structures installed on existing bridges with railing, during design, brackets spacing must be coordinated with railing post spacing and the Contractor must temporarily remove sections of railing to facilitate upper bracket installation. If it is determined during design that existing railings can't be removed, alternate upper connection details must be developed for the contract plans and approved by the Bureau of Bridges and Structures.

For Details A & B, Sections C-C, D-D and E-E, see Base Sheet BM-3.
For Details D & E, see Base Sheet BM-4.

Structure Number	Station	h	i	j	k max. (10'-0" max.)	ℓ max. (8'-0" max.)	m (15'-0" max.)
028-0055	9+78.11	5'-6"	1'-8"	1'-5"	2'-6"	1'-0"	5'-0"
028-0059	176+52.10	7'-6"	1'-10"	1'-7"	3'-3"	1'-0"	5'-0"
028-0056	229+54.5	5'-6"	1'-10"	1'-7"	2'-6"	1'-0"	5'-0"
028-0053	283+35.75	5'-6"	1'-8"	1'-5"	2'-6"	1'-0"	5'-0"
041-0113	117+09.55	7'-6"	2'-6"	2'-3"	3'-1"	1'-0"	5'-0"

BM-2 5-15-2023

ABNA DESIGN FIRM REG. 184.002117

USER NAME =	DESIGNED - SEA	REVISED -	
	CHECKED - CG	REVISED -	
PLOT SCALE =	DRAWN - MBJ	REVISED -	
PLOT DATE =	CHECKED - SEA	REVISED -	

STATE OF ILLINOIS
DEPARTMENT OF TRANSPORTATION

BRIDGE MOUNT SIGN STRUCTURES
WALKWAY AND CONNECTION DETAILS

SHEET 2 OF 3 SHEETS

F.A.I. RTE.	SECTION	COUNTY	TOTAL SHEETS	SHEET NO.
57	(28-2)B-2; (28-1)B-2	FRANKLIN	598	227
		CONTRACT NO. 78884		
		ILLINOIS	FED. AID PROJECT	

MODEL: Default
FILE NAME: J:\2021\6084\Cadd\Design\CAD_Sheets\OHSS_SHEETS\D978884-017-OHSS_DETAILS.dgn
10/16/2024 12:46:31 PM

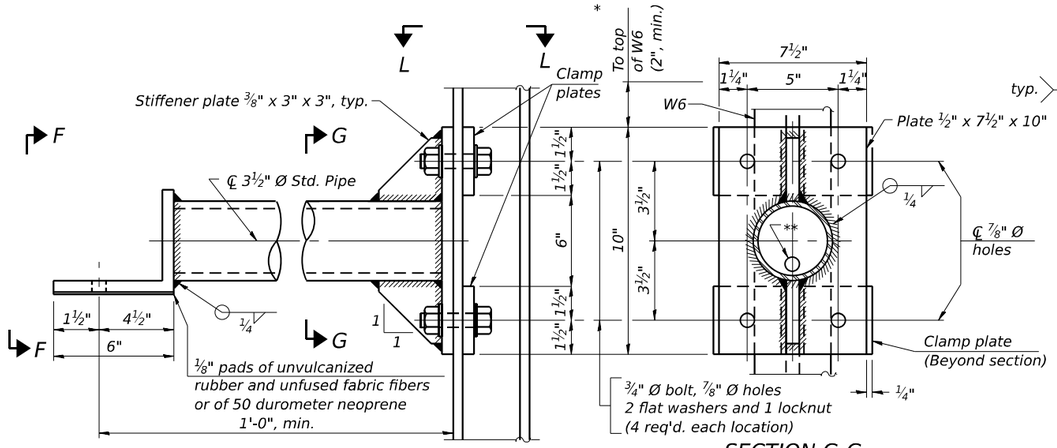

DETAIL A

SECTION G-G

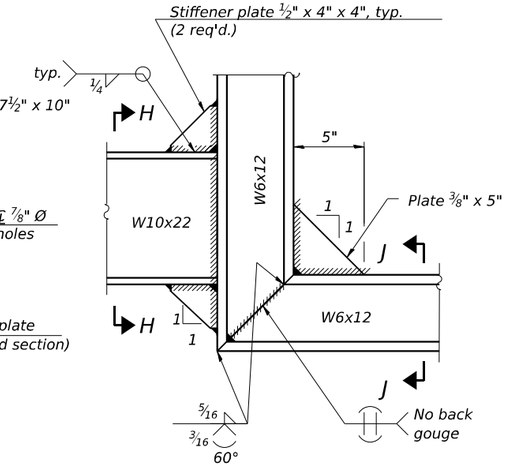

DETAIL B - WELDED W10x22 TO W6x12 CONNECTION

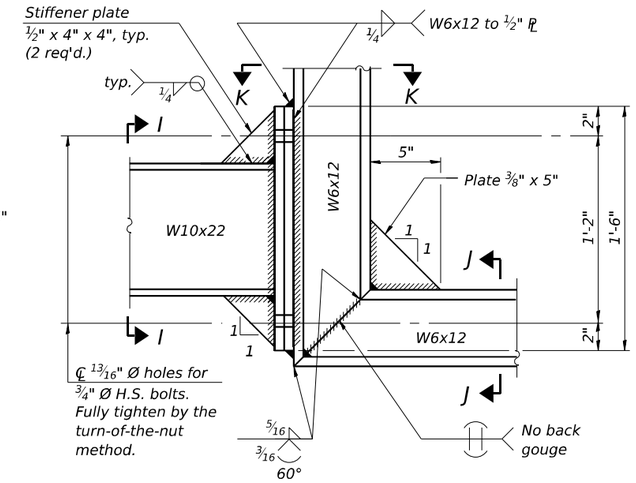

DETAIL B - ALTERNATE BOLTED W10x22 TO W6x12 CONNECTION

Alternate may be substituted by contractor to facilitate construction or galvanizing, especially on long struts for skewed bridges.

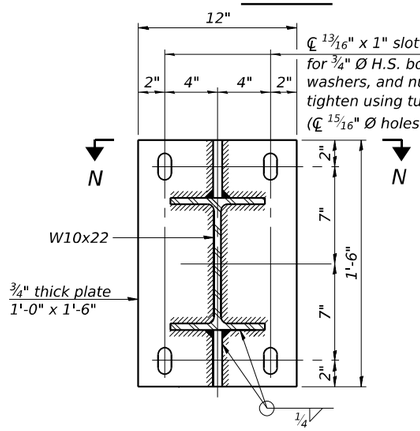

SECTION C-C

Steel beam or girder connection plate details

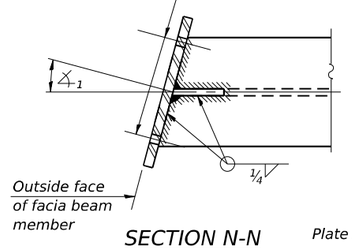

SECTION N-N

Skewed connection detail for W10x22 to facia beam.

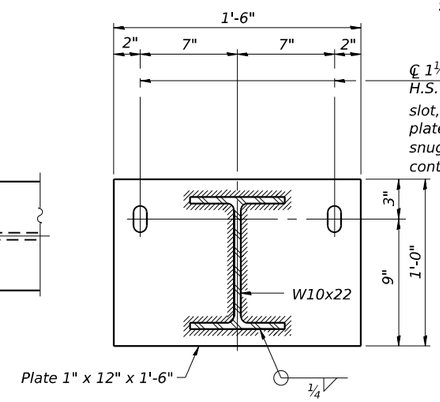

SECTION D-D

Concrete beam or girder connection plate details.

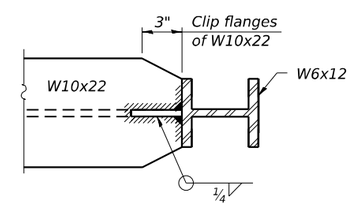

SECTION E-E

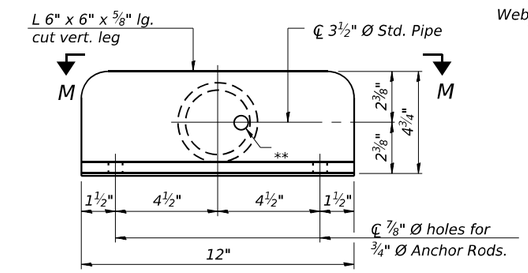

VIEW F-F

** 13/16" Ø holes for galvanizing. After galvanizing, install ⅞" Ø A307 hot-dip galvanized bolt to close hole in angle. (No bolt required in ½" plate.)

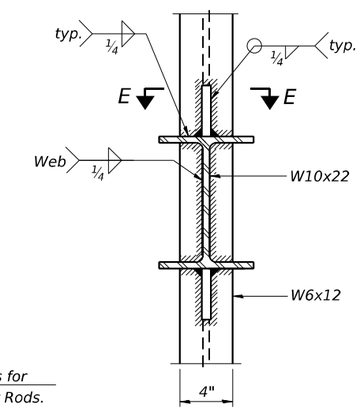

SECTION H-H

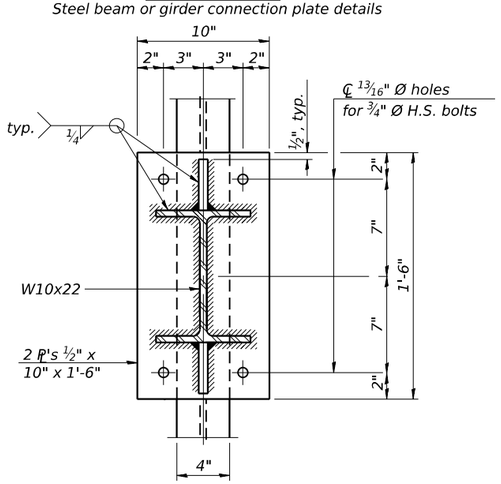

SECTION I-I

Note: For constant slab overhang at facia beam, ∡1 = ∡2 = sign angle. For flared beams or other special cases where ∡1 ≠ ∡2, ∡1 = sign angle.

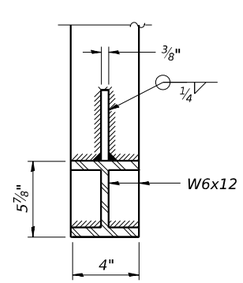

SECTION J-J

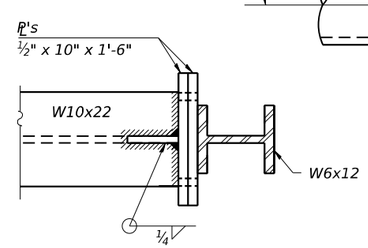

SECTION K-K

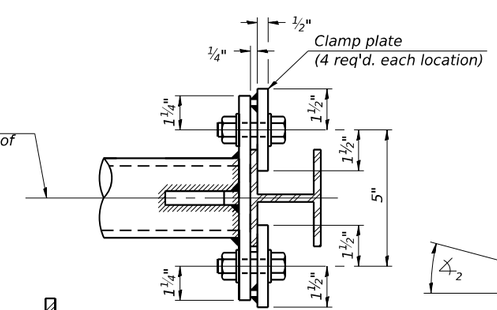

SECTION L-L

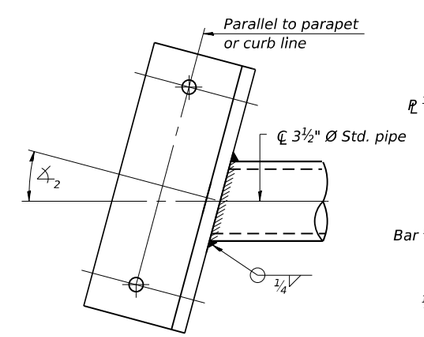

SECTION M-M

Skewed connection detail for 3½" Ø pipe to parapet.

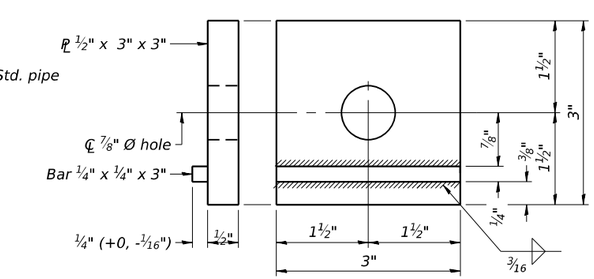

CLAMP PLATE DETAILS

BM-3 5-15-2023

ABNA DESIGN FIRM REG. 184.002117	USER NAME =	DESIGNED - SEA	REVISED -
		CHECKED - CG	REVISED -
	PLOT SCALE =	DRAWN - MBJ	REVISED -
	PLOT DATE =	CHECKED - SEA	REVISED -

STATE OF ILLINOIS
DEPARTMENT OF TRANSPORTATION

BRIDGE MOUNT SIGN STRUCTURES
CONNECTION DETAILS

SHEET 3 OF 3 SHEETS

F.A.I. RTE.	SECTION	COUNTY	TOTAL SHEETS	SHEET NO.
57	(28-2)B-2; (28-1)B-2	FRANKLIN	598	228
		CONTRACT NO. 78884		
	ILLINOIS	FED. AID PROJECT		

MODEL: Default
FILE NAME: J:\2021\6084\Cadd\Design\CAD_Sheets\OHSS SHEETS\D978884-018-OHSS DETAILS.dgn
10/16/2024 12:46:32 PM

Benchmark: Station 178+30.41, N=548130.674 E=819136.209, Elevation 415.735
IDOT Monument in Centerline of I-57 located at the PC on the south overhead transmission lines.

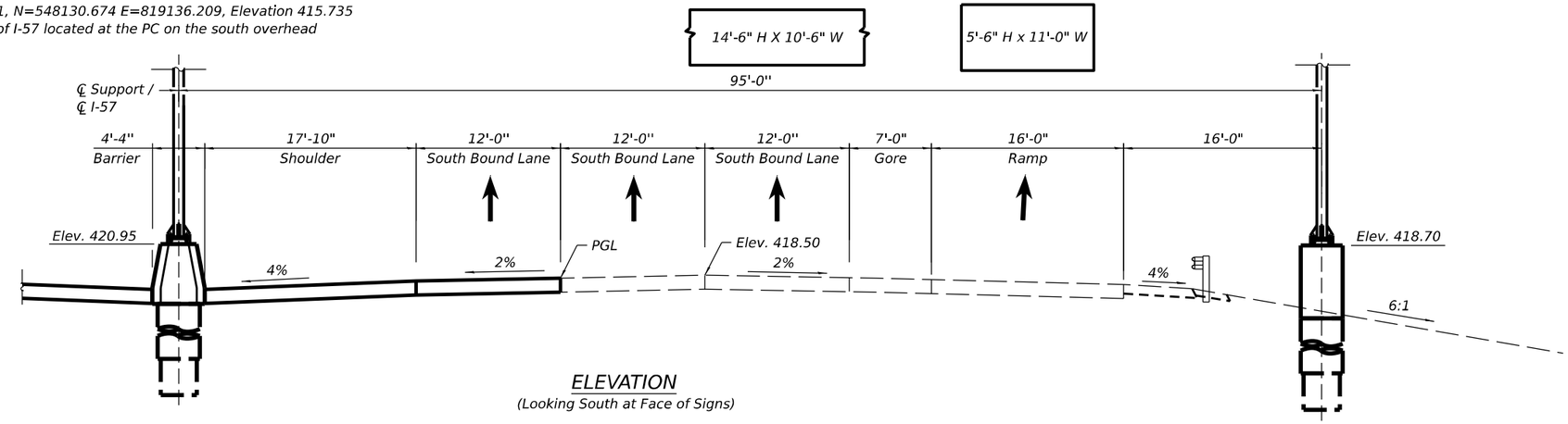

ELEVATION
(Looking South at Face of Signs)

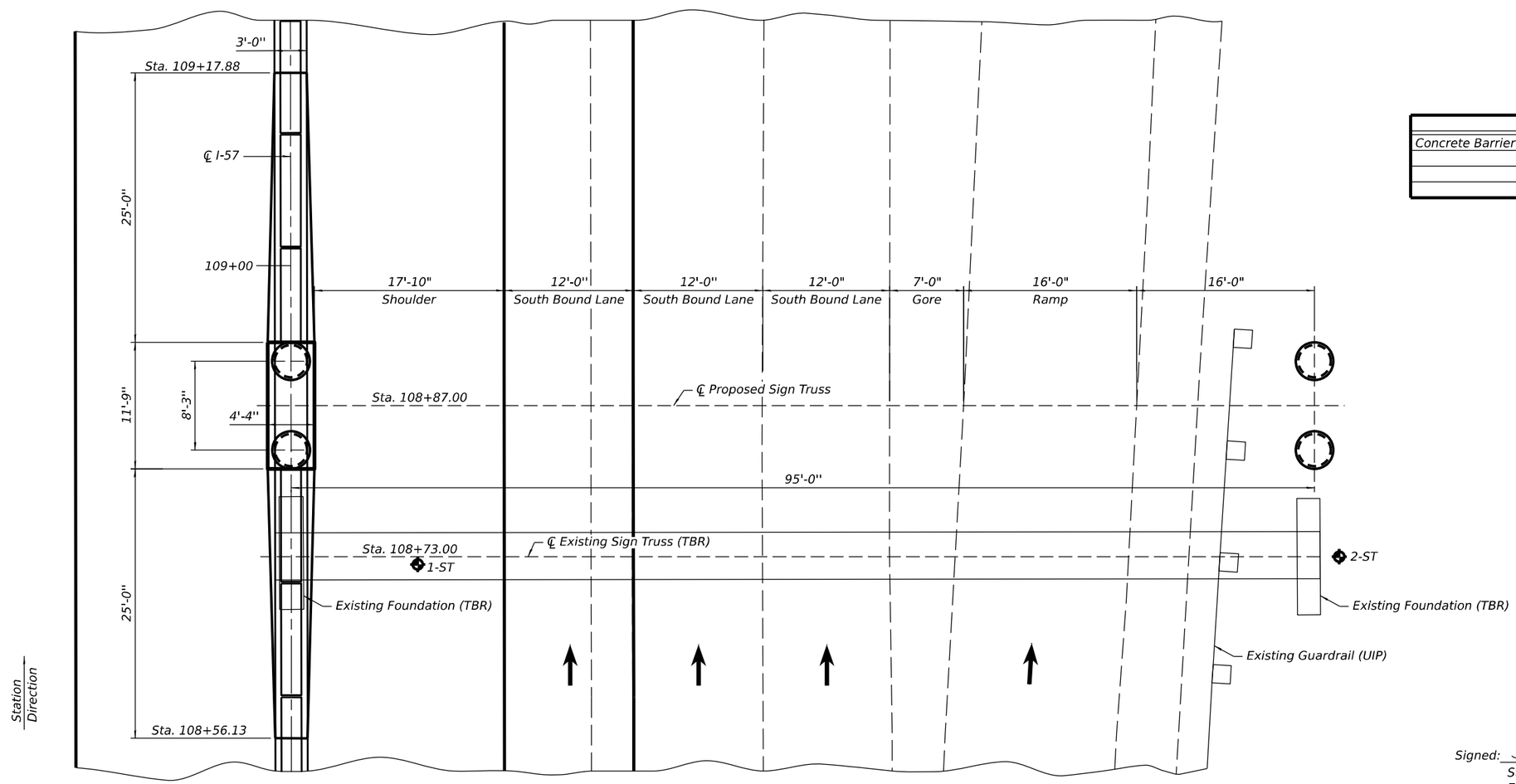

PLAN

BILL OF MATERIAL

Item	Unit	Total
Concrete Barrier Transition	Foot	50

LEGEND

Soil Boring Location

Signed: _____
Stephen E. Alsbury, S.E. IL. Lic. No. 081-5261
Expires: 11/30/2024
Date: April 5th, 2024

LICENSED STRUCTURAL ENGINEER
STEPHEN E. ALSBURY
081-5261
STATE OF ILLINOIS

ABNA DESIGN FIRM REG. 184.002117

USER NAME =	DESIGNED - SEA	REVISED -	
	CHECKED - FH	REVISED -	
PLOT SCALE =	DRAWN - MBJ	REVISED -	
PLOT DATE =	CHECKED - SEA	REVISED -	

STATE OF ILLINOIS
DEPARTMENT OF TRANSPORTATION

GENERAL PLAN AND ELEVATION
STRUCTURE NO. 9S028I057L078.8

SHEET 1 OF 15 SHEETS

F.A.I. RTE.	SECTION	COUNTY	TOTAL SHEETS	SHEET NO.
57	(28-2)B-2; (28-1)B-2	FRANKLIN	598	229
		CONTRACT NO. 78884		
	ILLINOIS	FED. AID PROJECT		

MODEL: Default
FILE NAME: J:\2021\6084\Cadd\Design\CAD_Sheets\OHSS_SHEETS\D978884-001-GPE.dgn
4/8/2024 3:07:47 PM

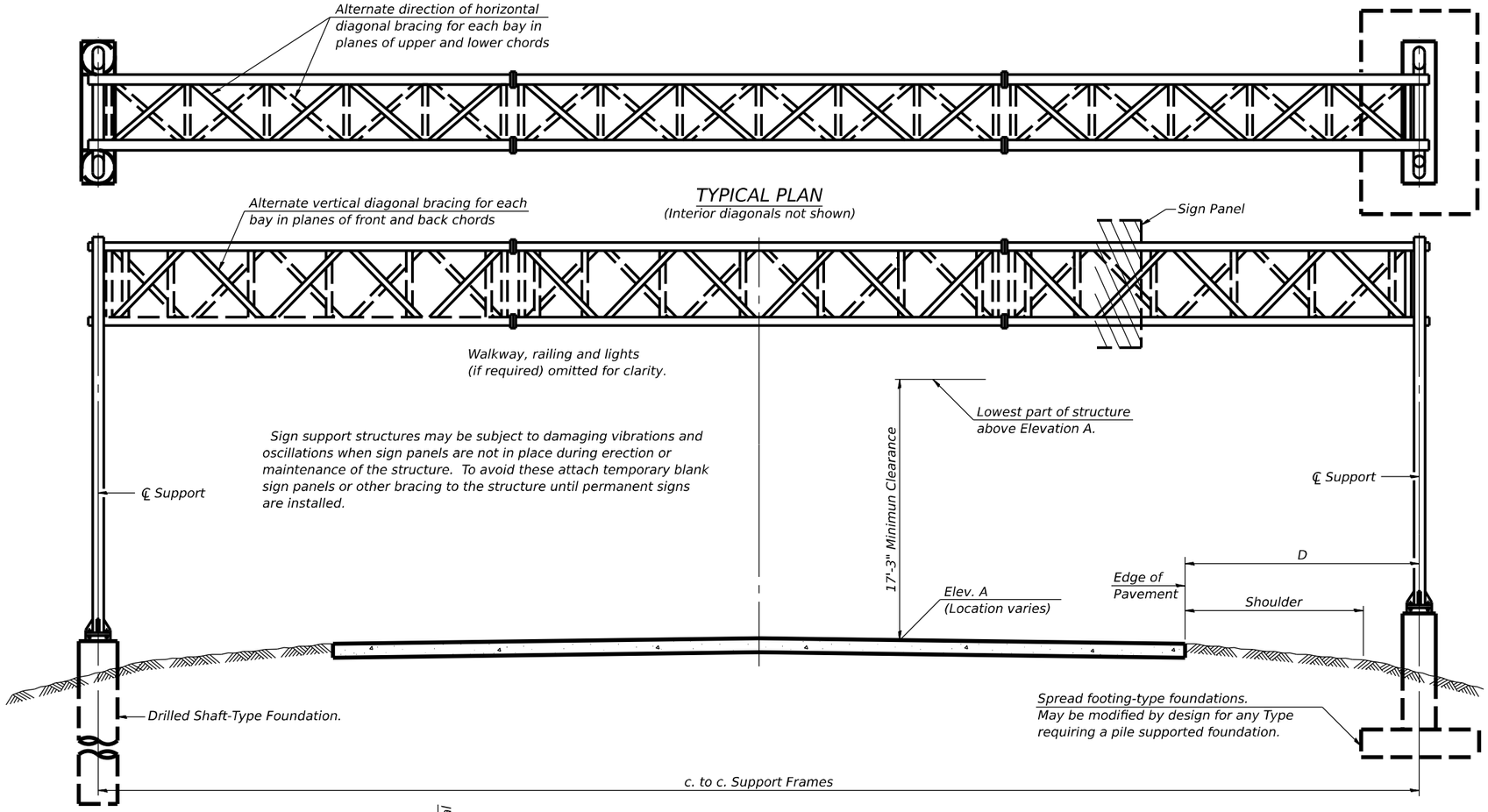

TYPICAL PLAN

(Interior diagonals not shown)

TYPICAL ELEVATION

(Looking at Face of Signs**)

Elev. A = Elevation at point of minimum clearance to sign, walkway support or truss.

Structure Number	Station	Design Truss Type	c. to c. Supports	Elev. A	Dim. D	Height of Tallest Sign	Total Sign Area
9S028I057L078.8	108+87.00	I-A	95'-0"	418.50	16'-0"	14'-6"	213

** Looking upstation for structures with signs both sides.

* If M270 Gr. 50W (M222) steel is proposed, chemistry for plate to be used shall first be approved by the Engineer as suitable for galvanizing and welding.

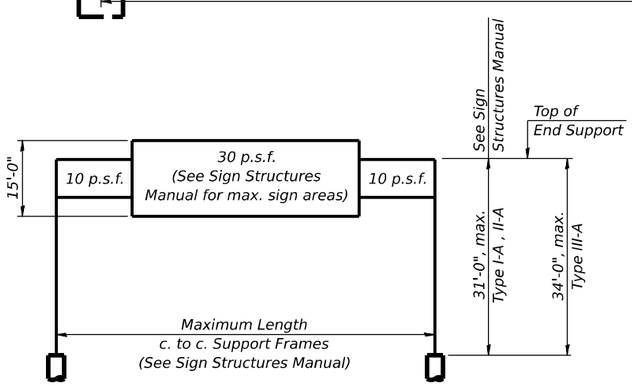

DESIGN WIND LOADING DIAGRAM

Parameters shown are basis for I.D.O.T. Standards and Sign Manual Tables. Installations not within dimensional limits shown require special analysis for all components.

GENERAL NOTES

DESIGN: AASHTO Standard Specifications for Structural Supports for Highway Signs, Luminaires and Traffic Signals. ("AASHTO Specifications")

CONSTRUCTION: Current (at time of letting) Illinois Department of Transportation Standard Specifications for Road and Bridge Construction, Supplemental Specifications and Special Provisions. ("Standard Specifications")

LOADING: 90 M.P.H. WIND VELOCITY

WALKWAY LOADING: Dead load plus 500 lbs. concentrated live load.

DESIGN STRESSES:
Field Units
f'c = 3,500 p.s.i.
fy = 60,000 p.s.i. (reinforcement)

WELDING: All welds to be continuous unless otherwise shown. All welding to be done in accordance with current AWS D1.1 and D1.2 Structural Welding Codes (Steel and Aluminum) and the Standard Specificiations.

MATERIALS: Aluminum Alloys as shown throughout plans. All Structural Steel Pipe shall be ASTM A53 Grade B or A500 Grade B or C. If A500 pipe is substituted for A53, then the outside diameter shall be as detailed and wall thickness greater than or equal to A53. All Structural Steel Plates and Shapes shall conform to AASHTO M270 Gr. 36, Gr. 50 or Gr. 50W*. Stainless steel for shims, sleeves and handhole covers shall be ASTM A240, Type 302 or 304, or another alloy suitable for exterior exposure and acceptable to the Engineer.
The steel pipe and stiffening ribs at the base plate for the column shall have a minimum longitudinal Charpy V-Notch (CVN) energy of 15 lb.-ft. at 40° F. (Zone 2) before galvanizing.

FASTENERS FOR ALUMINUM TRUSSES: All bolts noted as "high strength" must satisfy the requirements of AASHTO M164 (ASTM A325), or approved alternate, and must have matching lock nuts. Threaded studs for splices (if Members interfere) must satisfy the requirements of ASTM A449, ASTM A193, Grade B7, or approved alternate, and must have matching lock nuts. Bolts and lock nuts not required to be high strength must satisfy the requirements of ASTM A307. All bolts and lock nuts must be hot dip galvanized per AASHTO M232. The lock nuts must have nylon or steel inserts. A stainless steel flat washer conforming to ASTM A240 Type 302 or 304, is required under both head and nut or under both nuts where threaded studs are used. High strength bolt installation shall conform to Article 505.04 (f) (2)d of the IDOT Standard Specifications for Road and Bridge Construction. Rotational capacity ("ROCAP") testing of bolts will not be required.

U-BOLTS AND EYEBOLTS: U-Bolts and Eyebolts must be produced from ASTM A276 Type 304, 304L, 316 or 316L, Condition A, cold finished stainless steel, or an equivalent material acceptable to the Engineer. All nuts for U-Bolts and Eyebolts must be lock nuts equivalent to ASTM A307 with nylon or steel inserts and hot dip galvanized per AASHTO M232. A stainless steel flat washer conforming to ASTM A240, Type 302 or 304, is required under each U-Bolt and Eyebolt lock nut.

GALVANIZING: All Steel Grating, Plates, Shapes and Pipe shall be Hot Dip Galvanized after fabrication in accordance with AASHTO M111. Painting is not permitted.

ANCHOR RODS: Shall conform to ASTM F1554 Gr. 105.

CONCRETE SURFACES: All concrete surfaces above an elevation 6" below the lowest final ground line at each foundation shall be cleaned and coated with Concrete Sealer in accordance with the Standard Specifications.

REINFORCEMENT BARS: Reinforcement Bars designated (E) shall be epoxy coated in accordance with the Standard Specifications.

FOUNDATIONS: The contract unit price for Concrete Foundations and Drilled Shaft Concrete Foundations shall include reinforcement bars complete in place.

TOTAL BILL OF MATERIAL

ITEM	UNIT	TOTAL
OVERHEAD SIGN STRUCTURE SPAN TYPE I-A	Foot	95
DRILLED SHAFT CONCRETE FOUNDATIONS	Cu. Yds.	29.8
DRILLED SHAFT IN ROCK	Cu. Yds.	5.2

OS-A-1 5-15-2023

ABNA DESIGN FIRM REG. 184.002117

USER NAME =	DESIGNED - SEA	REVISED -	
	CHECKED - FH	REVISED -	
PLOT SCALE =	DRAWN - MBJ	REVISED -	
PLOT DATE =	CHECKED - SEA	REVISED -	

STATE OF ILLINOIS
DEPARTMENT OF TRANSPORTATION

OVERHEAD SIGN STRUCTURES - GENERAL PLAN & ELEVATION - ALUMINUM TRUSS & STEEL SUPPORTS

SHEET 2 OF 15 SHEETS

F.A.I. RTE.	SECTION	COUNTY	TOTAL SHEETS	SHEET NO.
57	(28-2)B-2; (28-1)B-2	FRANKLIN	598	230

CONTRACT NO. 78884
ILLINOIS FED. AID PROJECT

MODEL: Default
FILE NAME: J:\2021\6084\Cadd\Design\CAD_Sheets\OHSS_SHEETS\D9788884-002-GEN_PLAN.dgn
4/8/2024 3:07:48 PM

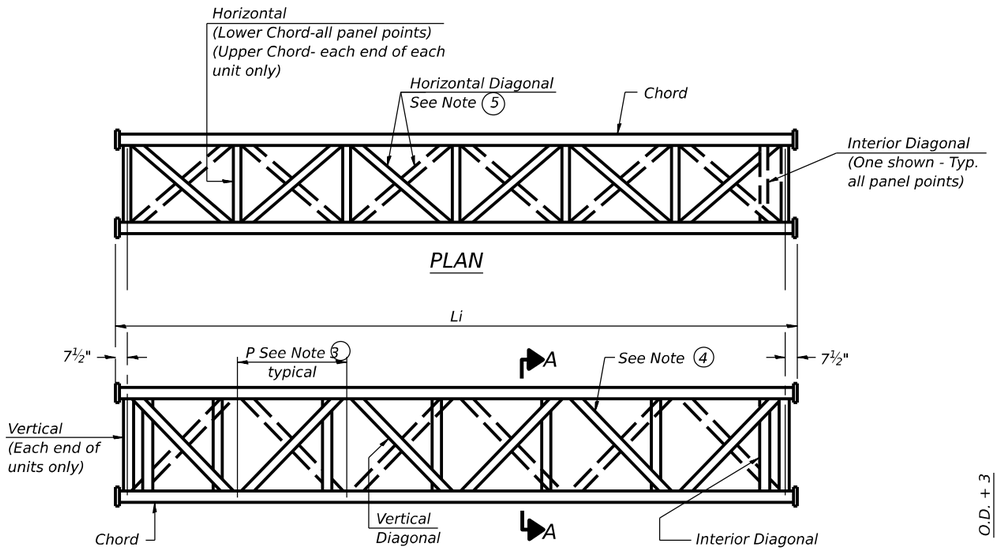

ELEVATION
TYPICAL INTERIOR UNIT
Even number of panels/interior unit required.

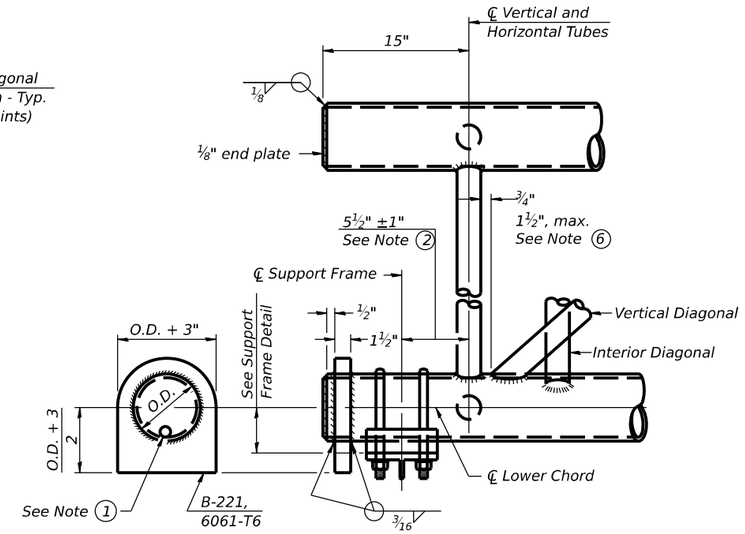

SUPPORT END DETAIL FOR EXTERIOR UNIT

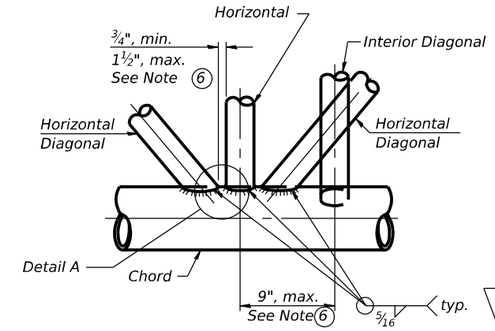

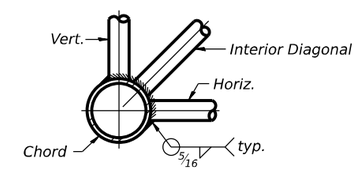

TYPICAL JOINT DETAILS

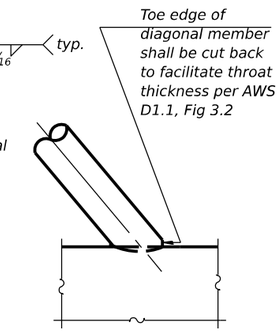

DETAIL A

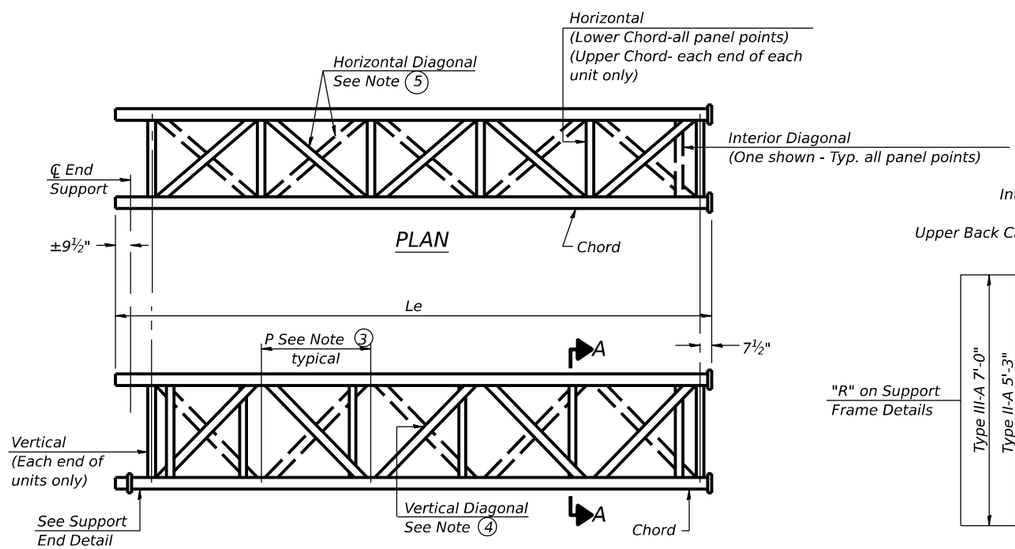

ELEVATION
TYPICAL EXTERIOR UNIT
Even or odd number of panels/exterior units allowed.

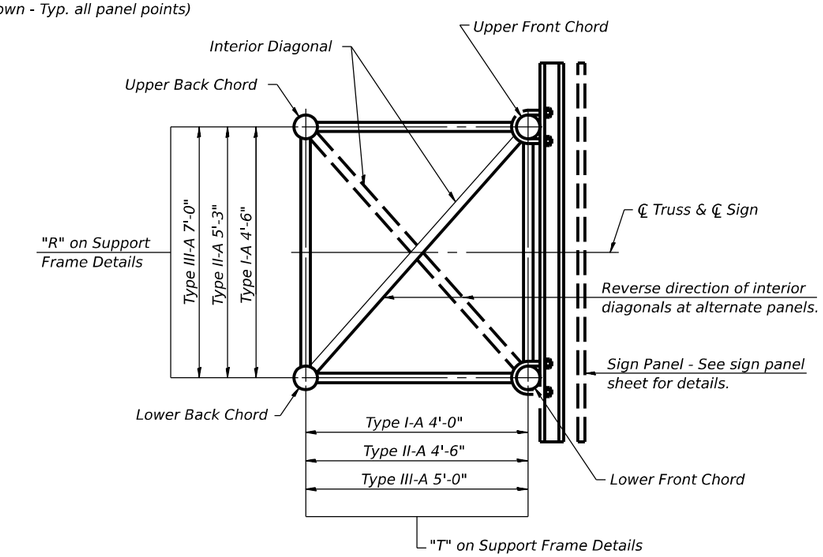

SECTION A-A

1. Contractor may alternatively use standard aluminum drive-fit cap to close end. ½" Ø drain hole in end plate/drive-fit cap. (Typ. at ends of all chords)
2. 5½" end dimension may vary by ±1" to provide uniform panel spacing (P).
3. Panel spacing (P) shall be uniform for entire truss and between 4'-0" and 5'-0" for Type I-A or 4'-0" and 5'-6" for Types II-A and III-A.
4. Vertical Diagonals in front and back face shall alternate.
5. Hidden lines show wind bracing alternates direction between planes of top and bottom chords.
6. All diagonals shall be detailed for minimum offset from the panel point based on the following: Offset shall be such as to provide a ¾" minimum to 1½" maximum clearance between any diagonal and any horizontal or vertical member, and to provide clearance for U-bolt connections of signs or walkway brackets.

OS-A-2 5-15-2023

ABNA DESIGN FIRM REG. 184.002117

USER NAME =	DESIGNED - SEA	REVISED -	
	CHECKED - FH	REVISED -	
PLOT SCALE =	DRAWN - MBJ	REVISED -	
PLOT DATE =	CHECKED - SEA	REVISED -	

STATE OF ILLINOIS
DEPARTMENT OF TRANSPORTATION

OVERHEAD SIGN STRUCTURES - ALUMINUM TRUSS
DETAILS FOR TRUSS TYPES I-A, II-A AND III-A

SHEET 3 OF 15 SHEETS

F.A.I. RTE.	SECTION	COUNTY	TOTAL SHEETS	SHEET NO.
57	(28-2)B-2; (28-1)B-2	FRANKLIN	598	231
		CONTRACT NO. 78884		
	ILLINOIS	FED. AID PROJECT		

MODEL: Default
FILE NAME: J:\2021\6084\Cadd\Design\CAD_Sheets\OHSS SHEETS\D978884-003-OHSS DETAILS.dgn
4/8/2024 3:07:49 PM

TRUSS UNIT TABLE

Structure Number	Station	Design Truss Type	Exterior Units (2)			Interior Unit				Upper & Lower Chord		Verticals; Horizontals; Vertical,Horizontal, and Interior Diagonals		Camber at Midspan	Splicing Flange					
			No. Panels per Unit	Unit Lgth.(Le)	Panel Lgth.(P)	No. Req'd.	No. Panels per Unit	Unit Lgth.(Li)	Panel Lgth.(P)	O.D.	Wall	O.D.	Wall		Bolts		Weld Sizes		A	B
															No./Splice	Dia.	W	W1		
9S028I057L078.8	108+87.00	I-A	7	33'-11½"	4'-7"	1	6	28'-9"	4'-7"	5½"	5/16"	2½"	5/16"	3"	6	⅞"	⅜"	¼"	9¼"	12¼"

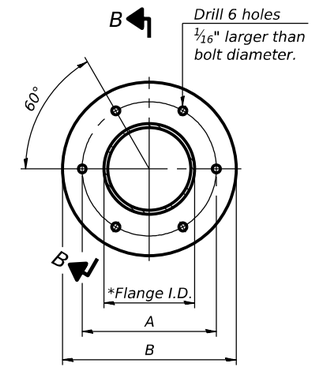

TRUSS TYPES I-A, II-A, & III-A

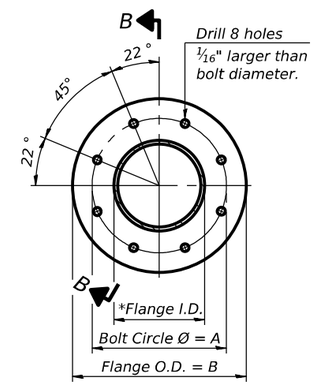

TRUSS TYPES II-A & III-A

SPLICING FLANGES

ASTM B221, Alloy 6061-T6
or ASTM B209, Alloy 6061-T651
*To fit O.D. of Chord with maximum gap of 1/16".

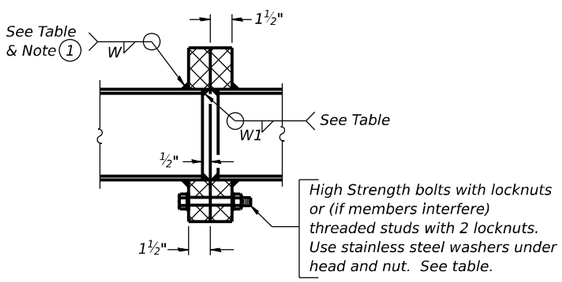

SECTION B-B

1 Splicing Flanges shall be attached to each truss unit with the truss shop assembled to camber shown. Truss units shall be in proper alignment and flange surfaces shall be shop bolted into full contact before welding. Sufficient external welds or tacks shall be made to secure flanges until remaining welds are made after disassembly. Adjacent flanges shall be "match marked" to insure proper field assembly.

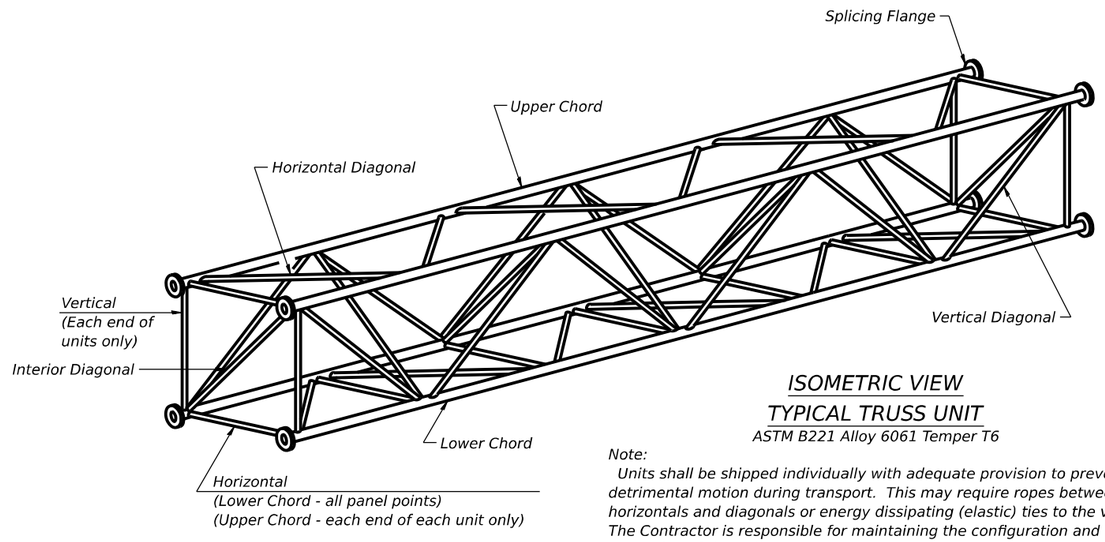

ISOMETRIC VIEW
TYPICAL TRUSS UNIT

ASTM B221 Alloy 6061 Temper T6

Note:
Units shall be shipped individually with adequate provision to prevent detrimental motion during transport. This may require ropes between horizontals and diagonals or energy dissipating (elastic) ties to the vehicle. The Contractor is responsible for maintaining the configuration and protection of the units.

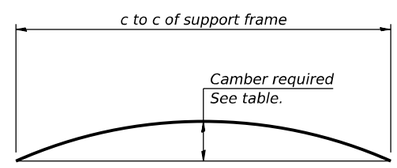

CAMBER DIAGRAM

Camber curve shown is theoretical. Actual camber attained by slope changes at splices between units.

CAMBER ATTAINMENT EXAMPLES:

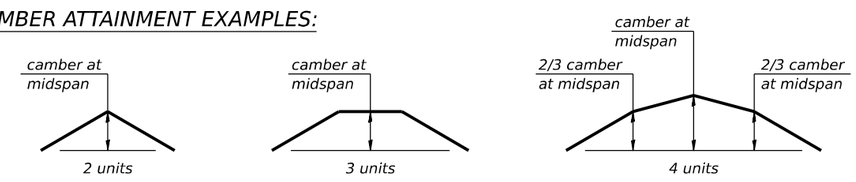

Camber shown is for fabrication only, measured with truss fully supported. (No-load condition)

OS4-A-2 5-15-2023

ABNA DESIGN FIRM REG. 184.002117	USER NAME =	DESIGNED - SEA	REVISED -
		CHECKED - FH	REVISED -
	PLOT SCALE =	DRAWN - MBJ	REVISED -
	PLOT DATE =	CHECKED - SEA	REVISED -

STATE OF ILLINOIS
DEPARTMENT OF TRANSPORTATION

OVERHEAD SIGN STRUCTURES - ALUMINUM TRUSS DETAILS
FOR TRUSS TYPES I-A, II-A AND III-A

SHEET 4 OF 15 SHEETS

F.A.I. RTE.	SECTION	COUNTY	TOTAL SHEETS	SHEET NO.
57	(28-2)B-2; (28-1)B-2	FRANKLIN	598	232

CONTRACT NO. 78884

ILLINOIS FED. AID PROJECT

MODEL: Default
FILE NAME: I:\2021\60841(Cadd\Design\CAD_Sheets\OHSS SHEETS\D9788841-004-OHSS DETAILS.dgn
4/8/2024 3:07:49 PM

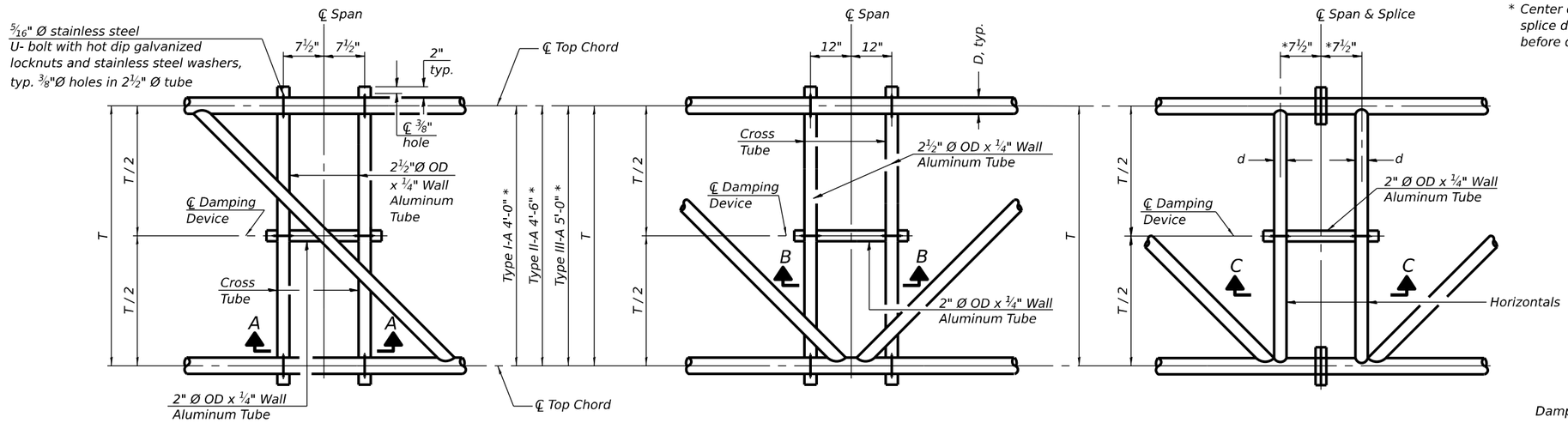

* Center of horizontal to center of splice dimension may vary. Verify before drilling holes in mounting tube.

PLAN DETAIL "A"
℄ Span between Panel Points

PLAN DETAIL "B"
℄ Span at Panel Point

PLAN DETAIL "C"
℄ Span at ℄ Chord Splice

NOTES

Damper: One damper per truss. (31 lbs. minimum Stockbridge-Type Aluminum - 29" minimum between ends of weights) Cost included in Overhead Sign Structure...

Materials: Aluminum tubes shall be ASTM B221 alloy 6061 temper T6. Cost included in Overhead Sign Structure...

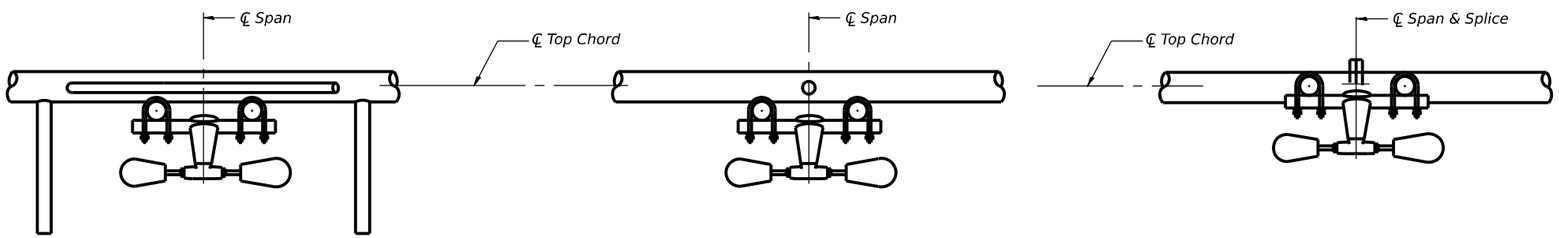

SECTION A-A

SECTION B-B

SECTION C-C

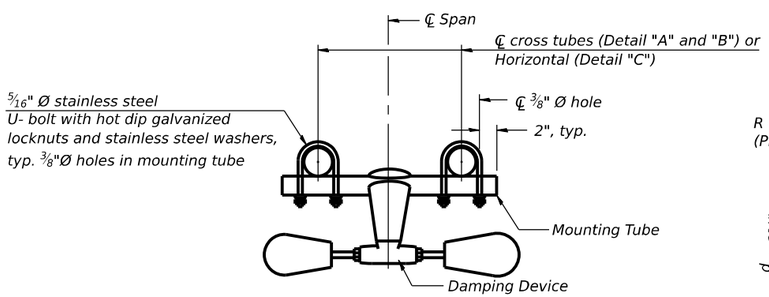

TRUSS DAMPING DEVICE CONNECTION DETAIL
(Typical)

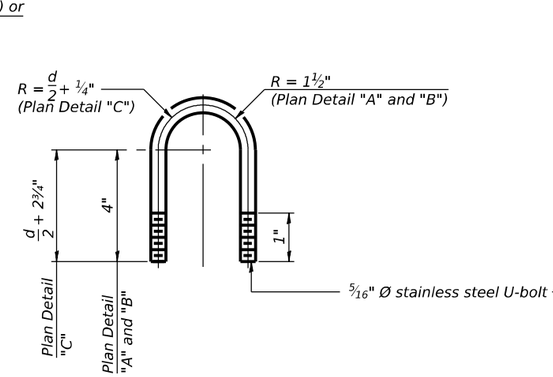

DAMPING DEVICE MOUNTING TUBE U-BOLT DETAIL
(Typical)

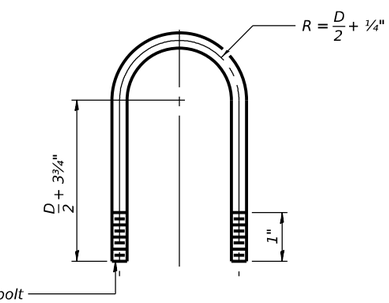

TOP CHORD TO CROSS TUBE U-BOLT DETAIL
(Typical - Detail "A" and "B")

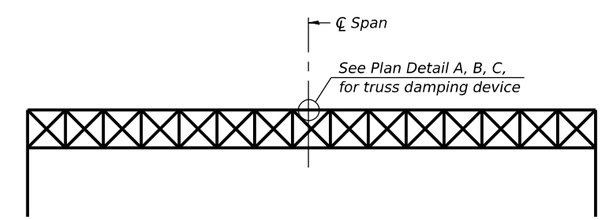

ELEVATION
Aluminum Overhead Sign Truss

OS-A-D 5-15-2023

ABNA DESIGN FIRM REG. 184.002117

USER NAME =	DESIGNED - SEA	REVISED -	
	CHECKED - FH	REVISED -	
PLOT SCALE =	DRAWN - MBJ	REVISED -	
PLOT DATE =	CHECKED - SEA	REVISED -	

STATE OF ILLINOIS
DEPARTMENT OF TRANSPORTATION

OVERHEAD SIGN STRUCTURE
DAMPING DEVICE

SHEET 5 OF 15 SHEETS

F.A.I. RTE.	SECTION	COUNTY	TOTAL SHEETS	SHEET NO.
57	(28-2)B-2; (28-1)B-2	FRANKLIN	598	233

CONTRACT NO. 78884

ILLINOIS FED. AID PROJECT

MODEL: Default
FILE NAME: J:\2021\60884\Cadd\Design\CAD_Sheets\OHSS_SHEETS\D978884-005-OHSS_DETAILS.dgn

4/8/2024 3:07:50 PM

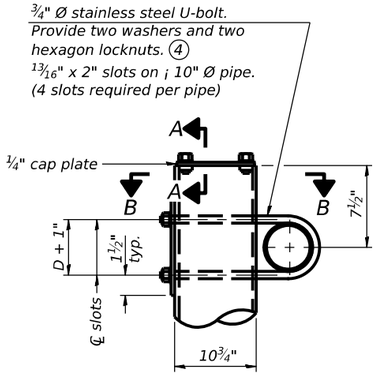

DETAIL A

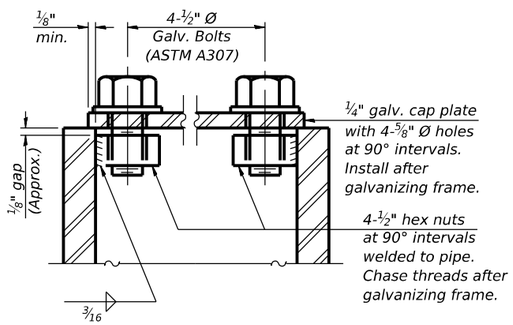

SECTION A-A

As an alternate to bolts, may use galvanized drive-fit caps installed after galvanizing frame.

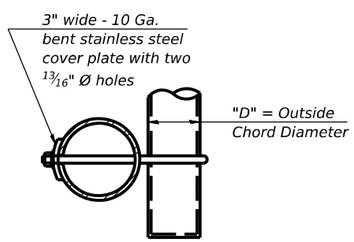

SECTION B-B

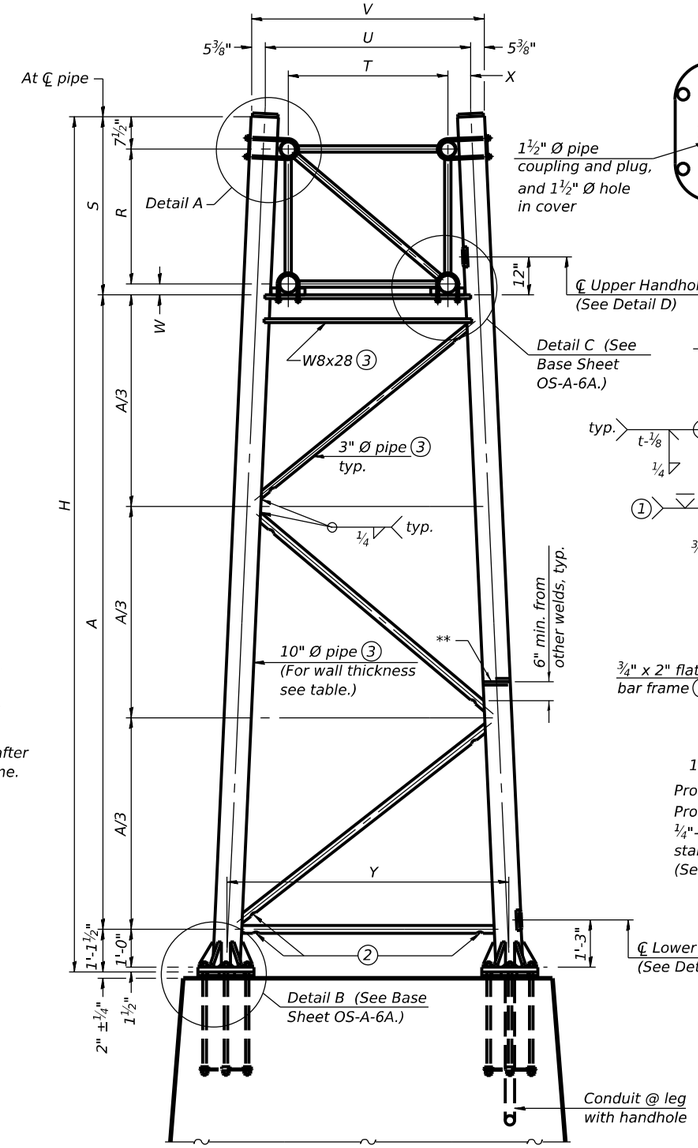

For Foundation Details, see base sheet OS-F3 (Spread Footing) or OS4-F3 (Drilled Shaft).

SIDE ELEVATION

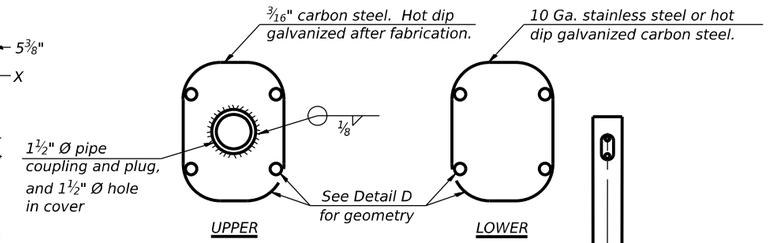

HANDHOLE COVERS

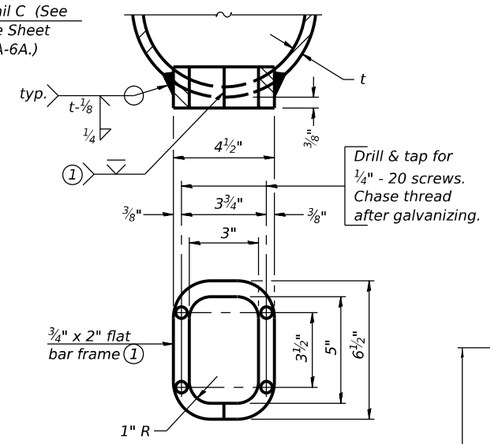

Provide 6½" x 4½" cover.
Provide 4-5/16" Ø holes in cover for ¼"-20 round head hot dip galvanized or stainless steel machine screws.
(See cover details)

DETAIL D

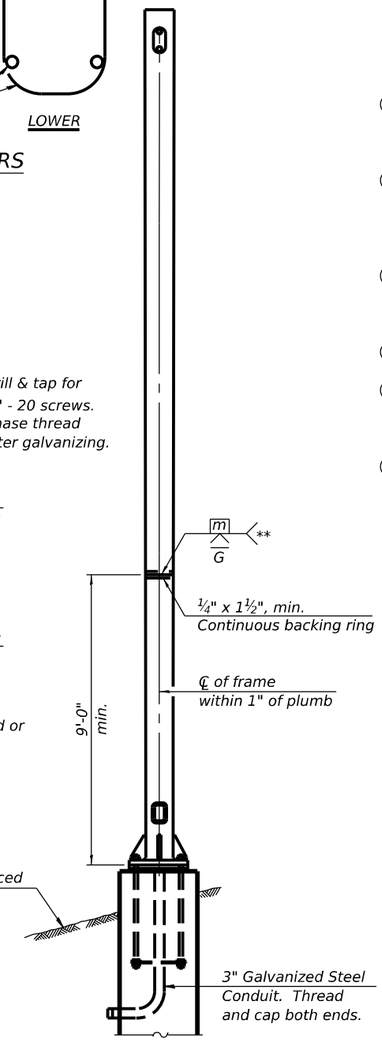

END ELEVATION

Support Design Loads: See Base Sheet OS-A-1 for design and loading criteria.
Load combinations checked include deadload plus:
a) 100% wind normal to sign, 20% parallel to sign
b) 60% wind normal to sign, 30% parallel to sign

1. In lieu of fabricated handhole frame as shown, may cut from 2" plate (rolling direction vertical). All cut faces to be ground to ANSI Roughness of 500μ in or less.
2. Galvanizing vent holes of adequate size shall be provided on underside at each end of bracing pipes. Alternately, holes may be provided in wall of pipe column. All vent holes shall be drilled and de-burred, typ.
3. Steel pipe, plate, carbon steel handhole covers and rolled sections shall be hot dip galvanized after fabrication. Painting is not permitted. See Base Sheet OS-A-1.
4. See General Notes for fasteners.
5. Dimensions shown are based on selection criteria in the Sign Structures Manual. Nonstandard applications must have dimensions verified or amended as appropriate.
6. "H" based on 15'-0" or actual sign height, whichever is greater.

Truss Type	Dimensions							
	R	S	T	U	V	W	X	Y
I-A	4'-6"	5'-5½"	4'-0"	5'-6"	6'-4¾"	4"	9"	8'-3"
II-A 5	5'-3"	6'-3¼"	4'-6"	6'-1"	6'-11¾"	4¾"	9½"	8'-3"

10" Ø PIPE TRUSS SUPPORT FRAME

** One butt welded joint is allowed only on one post per support frame. If used, weld procedure must be pre-approved by Engineer and joint shall receive 100% RT or UT (tension criteria) at Contractor's expense.

Structure Number	Station	Support Left	Support Right	Truss Type	Pipe Wall Thickness	H 6	A
9S028I057L078.8	108+87.00	X		I-A	0.279	26'-6"	19'-9"
			X	I-A	0.279	28'-9"	22'-0"

OS-A-6 5-15-2023

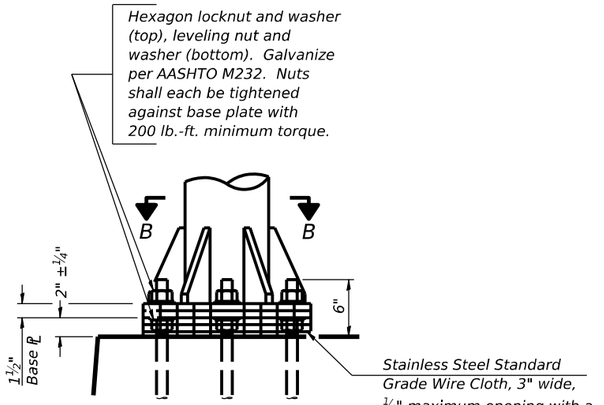

DETAIL B

Ribs shall be cut to fit slope of pipe.

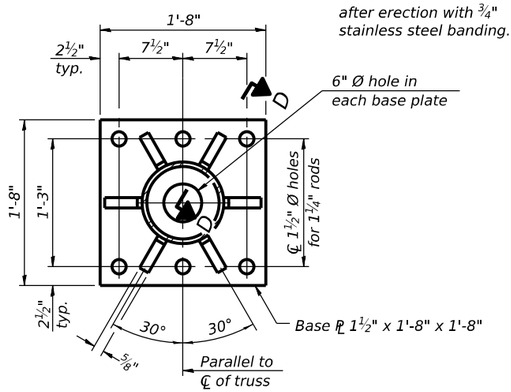

SECTION B-B

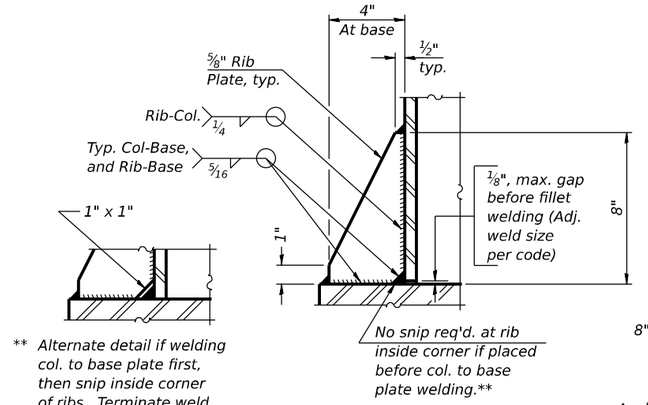

SECTION D-D

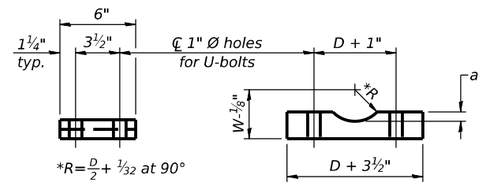

D = Outside Diameter of Chord.
For W, see Base Sheet OS-A-6.

SADDLE SHIM DETAIL

ASTM B26 Alloy 356-F
or
ASTM B209 Alloy 6061-T651
(4 required per sign truss)

Truss Chord Nominal Dia.	a
5"	¾"
5½"	13/16"
6"	⅞"
6½"	15/16"
7"	1"

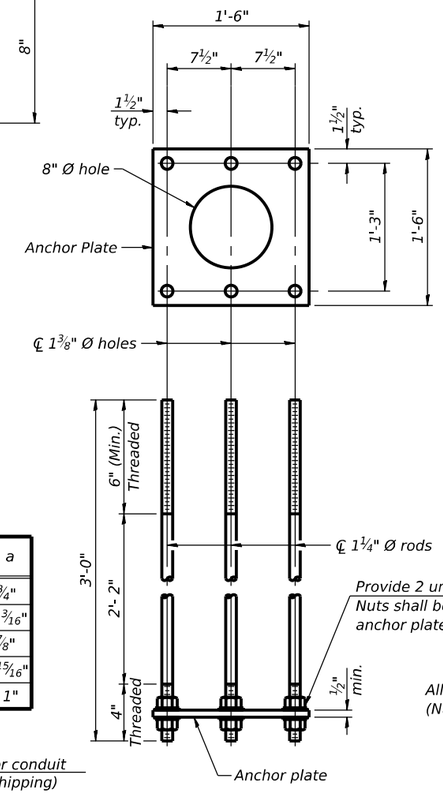

ANCHOR ROD DETAIL

Spread Footing Foundation

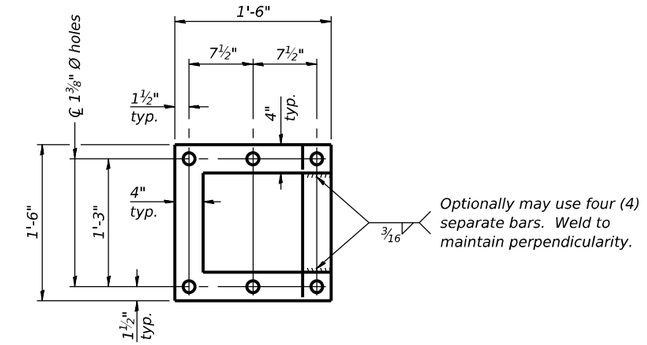

POSITIONING PLATE(S)

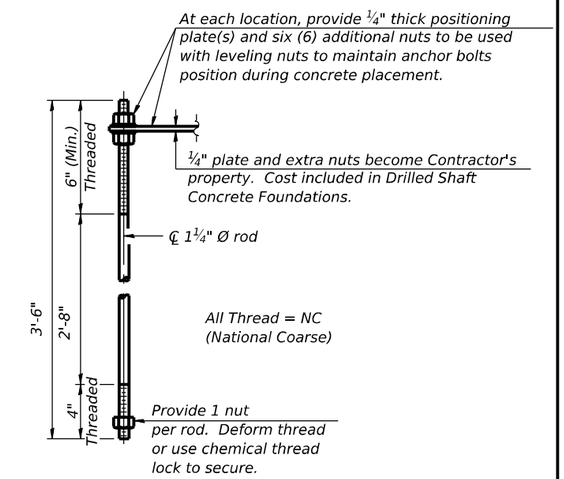

ANCHOR ROD DETAIL

Drilled Shaft Foundation

Anchor rods shall conform to ASTM F1554 Grade 105. Galvanize upper 12" minimum per AASHTO M232. No welding shall be permitted on rods.

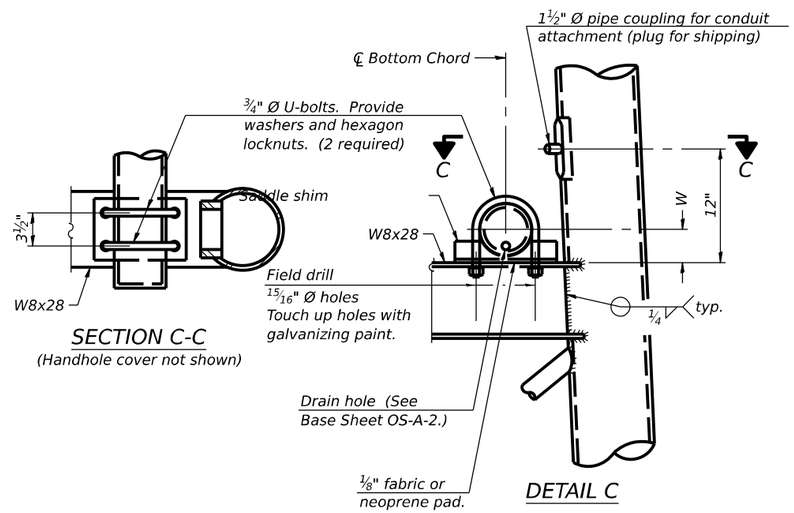

SECTION C-C

(Handhole cover not shown)

DETAIL C

10" Ø PIPE SUPPORT FRAME DETAILS

OS-A-6A 5-15-2023

MODEL: Default
FILE NAME: J:\2021\60841\Cadd\Design\CAD_Sheets\OHSS SHEETS\D978884-007-OHSS DETAILS.dgn
4/8/2024 3:07:51 PM

ABNA DESIGN FIRM REG. 184.002117

USER NAME =	DESIGNED - SEA	REVISED -	
	CHECKED - FH	REVISED -	
PLOT SCALE =	DRAWN - MBJ	REVISED -	
PLOT DATE =	CHECKED - SEA	REVISED -	

STATE OF ILLINOIS
DEPARTMENT OF TRANSPORTATION

OVERHEAD SIGN STRUCTURES
SUPPORT FRAME DETAILS - ALUMINUM TRUSS

SHEET 7 OF 15 SHEETS

F.A.I. RTE.	SECTION	COUNTY	TOTAL SHEETS	SHEET NO.
57	(28-2)B-2; (28-1)B-2	FRANKLIN	598	235
		CONTRACT NO. 78884		
	ILLINOIS	FED. AID PROJECT		

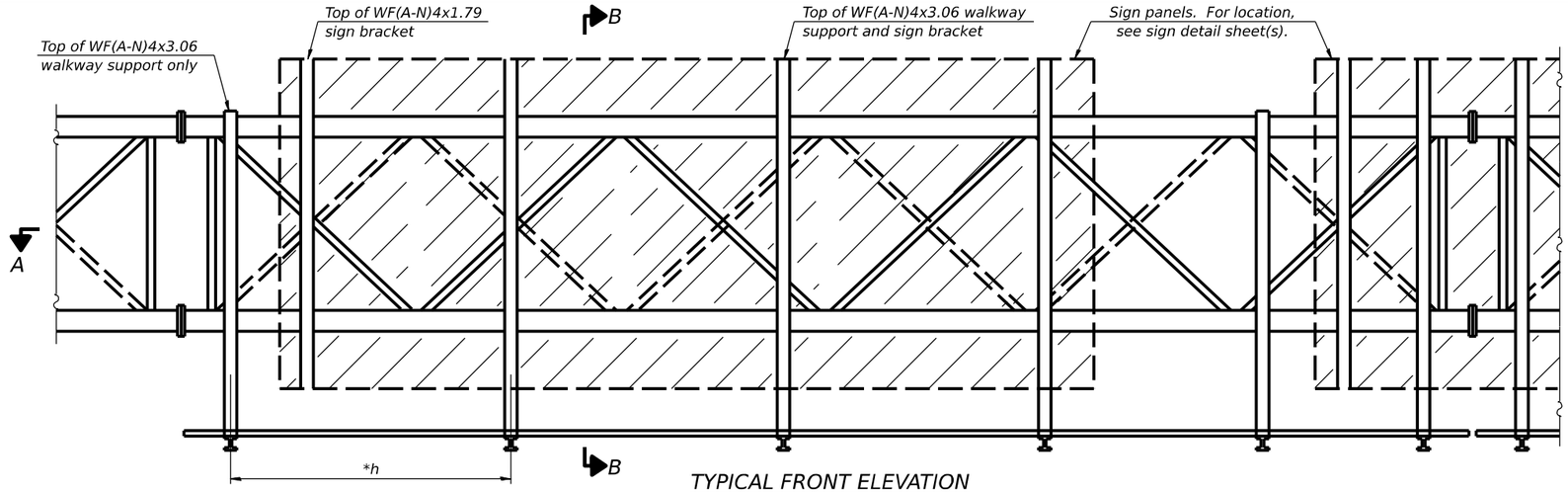

TYPICAL FRONT ELEVATION

With lights and handrail omitted for clarity.
For Section B-B, see Base Sheet OS-A-10.

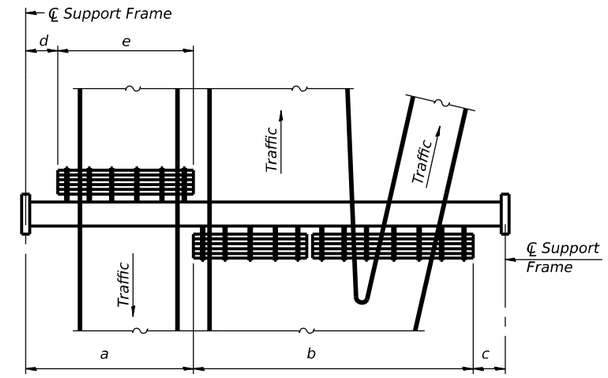

PLAN
WALKWAY AND HANDRAIL SKETCH

(Road plan beneath truss varies)

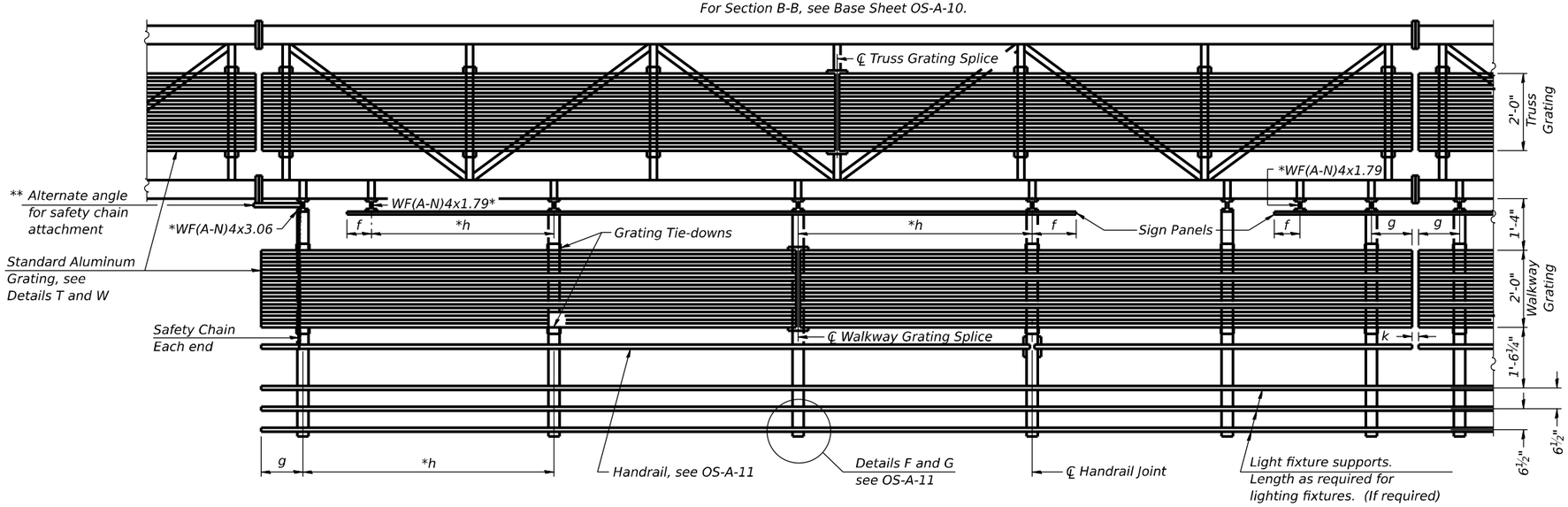

SECTION A-A

Handrail and walkway shall span a minimum of three brackets between splices and/or gap joints.
Place all sign and walkway brackets as close to panel points as practical.
Handrail joints, grating, and light support splices placed as needed.

BRACKET TABLE

WF(A-N)4x1.79 or WF(A-N)4x3.06 ASTM B308, Alloy 6061-T6		
Sign Width		Number Brackets Required
Greater Than	Less Than or Equal To	
	8'-0"	2
8'-0"	14'-0"	3
14'-0"	20'-0"	4
20'-0"	26'-0"	5
26'-0"	32'-0"	6

Notes:
* Space walkway brackets WF(A-N)4x3.06 and sign brackets WF(A-N)4x1.79 for efficiency and within limits shown:

f = 12" maximum, 4" minimum (End of sign to ℄ of nearest bracket)
g = 12" maximum, 4" minimum (End of walkway grating to ℄ of nearest support bracket)
h = 6'-0" maximum (℄ to ℄ sign and/or walkway support brackets, WF(A-N)4x1.79 or WF(A-N)4x3.06)
k = 2" maximum gap between adjacent walkway grating sections and handrail ends

** If walkway bracket at safety chain location is behind sign, add angle to bracket, see Alternate Safety Chain Attachment on Base Sheet OS-A-11.

For Details T and W, Section B-B and Grating Splice Details see Base Sheet OS-A-10.
For Handrail Details see Base Sheet OS-A-11.

Structure Number	Station	a	b	c	d	e	Walkway Grating and Handrail Lengths
9S028I057L078.8	108+87.00	43'-0"	36'-0"	16'-0"	-	-	36'-0"

Truss grating to facilitate inspection shall run full length (center to center of support frames) ±12" on overhead trusses. Cost of truss grating is included in "Overhead Sign Structure".

Walkway and Truss Grating width dimensions are nominal and may vary ±½" based on available standard widths.

OS-A-9 5-15-2023

MODEL: Default
FILE NAME: J:\2021\60841\Cadd\Design\CAD_Sheets\OHSS SHEETS\D978884-008-OHSS DETAILS.dgn

ABNA DESIGN FIRM REG. 184.002117

USER NAME =	DESIGNED - SEA	REVISED -	
	CHECKED - FH	REVISED -	
PLOT SCALE =	DRAWN - MBJ	REVISED -	
PLOT DATE =	CHECKED - SEA	REVISED -	

STATE OF ILLINOIS
DEPARTMENT OF TRANSPORTATION

OVERHEAD SIGN STRUCTURES
ALUMINUM WALKWAY DETAILS

SHEET 8 OF 15 SHEETS

F.A.I. RTE.	SECTION	COUNTY	TOTAL SHEETS	SHEET NO.
57	(28-2)B-2; (28-1)B-2	FRANKLIN	598	236
		CONTRACT NO. 78884		
	ILLINOIS	FED. AID PROJECT		

4/8/2024 3:07:51 PM

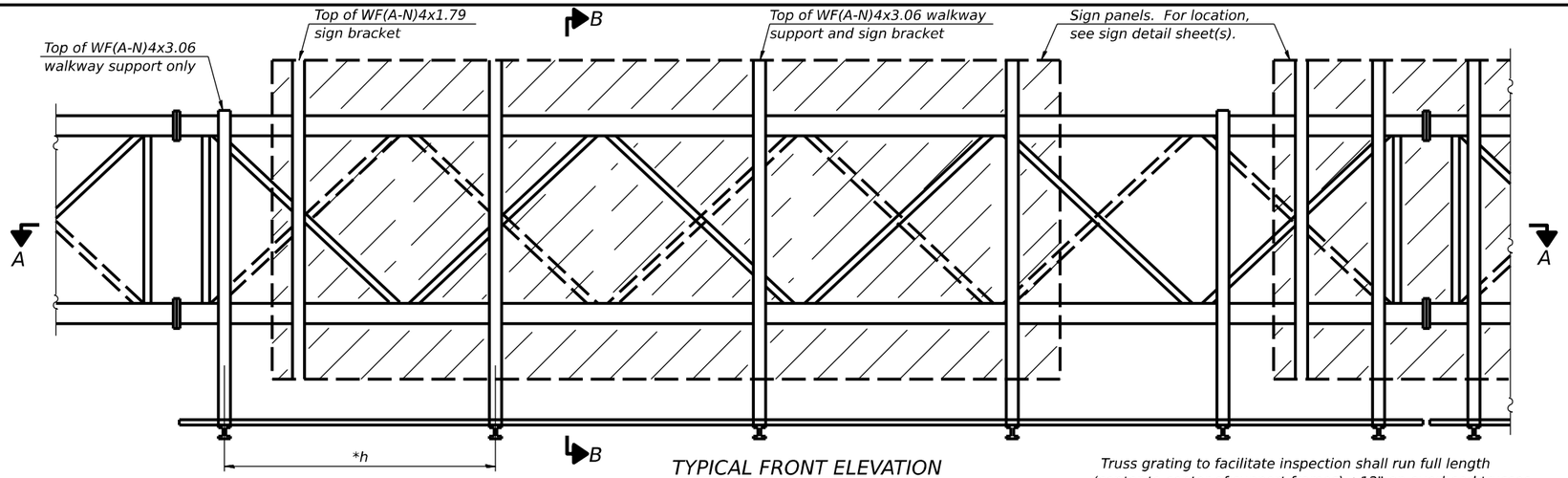

TYPICAL FRONT ELEVATION

With lights and handrail omitted for clarity.
For Section B-B, see Base Sheet OS-A-10.

Truss grating to facilitate inspection shall run full length (center to center of support frames) ±12" on overhead trusses. Cost of truss grating is included in "Overhead Sign Structure".

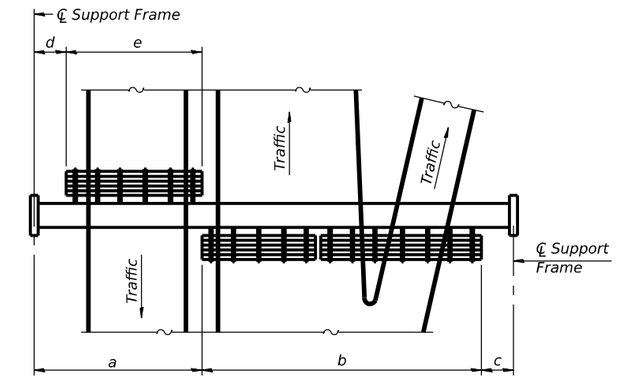

PLAN
WALKWAY AND HANDRAIL SKETCH

(Road plan beneath truss varies)

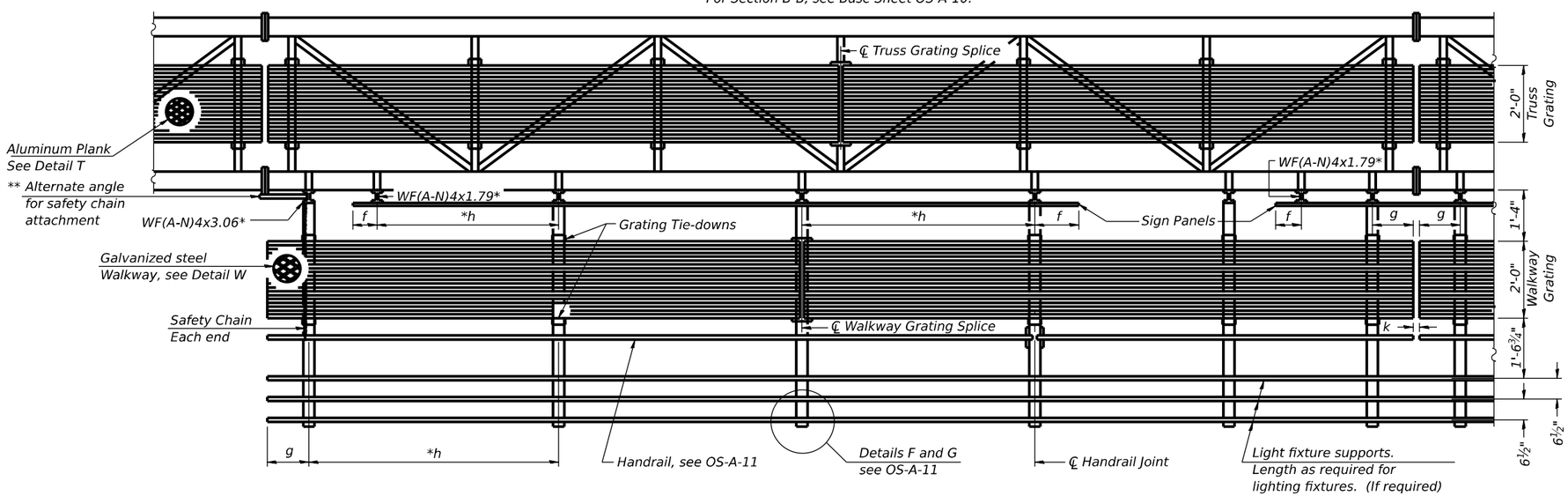

SECTION A-A

Handrail and walkway shall span a minimum of three brackets between splices and/or gap joints.
Place all sign and walkway brackets as close to panel points as practical.
Handrail joints, grating, and light support splices placed as needed.

BRACKET TABLE

WF(A-N)4x1.79 or WF(A-N)4x3.06 ASTM B308, Alloy 6061-T6		
Sign Width		Number Brackets Required
Greater Than	Less Than or Equal To	
	8'-0"	2
8'-0"	14'-0"	3
14'-0"	20'-0"	4
20'-0"	26'-0"	5
26'-0"	32'-0"	6

Note:
Details shown are considered equal alternatives to the Aluminum Walkway on Base Sheet OS-A-9, and may be substituted by Contractor at no change in contract cost.

Walkway and Truss Grating width dimensions are nominal and may vary ±½" based on available standard widths.

Structure Number	Station	a	b	c	d	e	Walkway Grating and Handrail Lengths
9S028I057L078.8	108+87.00	43'-0"	36'-0"	16'-0"	-	-	36'-0"

Notes:

* Space walkway brackets WF(A-N)4x3.06 and sign brackets WF(A-N)4x1.79 for efficiency and within limits shown:

f = 12" maximum, 4" minimum (End of sign to ℄ of nearest bracket)
g = 12" maximum, 4" minimum (End of walkway grating to ¡ of nearest support bracket)
h = 6'-0" maximum (℄ to ℄ sign and/or walkway support brackets, WF(A-N)4x1.79 or WF(A-N)4x3.06)
k = 2" maximum gap between adjacent walkway grating sections and handrail ends

** If walkway bracket at safety chain location is behind sign, add angle to bracket, see Alternate Safety Chain Attachment on Base Sheet OS-A-11.

For Details T and W, Section B-B and Grating Splice Details see Base Sheet OS-A-10.
For handrail details see base sheet OS-A-11.

OS-A-9S 5-15-2023

MODEL: Default
FILE NAME: J:\2021\6084\Cadd\Design\CAD_Sheets\OHSS_SHEETS\0978884-009-OHSS_DETAILS.dgn

ABNA DESIGN FIRM REG. 184.002117

USER NAME =	DESIGNED - SEA	REVISED -	
	CHECKED - FH	REVISED -	
PLOT SCALE =	DRAWN - MBJ	REVISED -	
PLOT DATE =	CHECKED - SEA	REVISED -	

STATE OF ILLINOIS
DEPARTMENT OF TRANSPORTATION

OVERHEAD SIGN STRUCTURES
ALTERNATE WALKWAY DETAILS

SHEET 9 OF 15 SHEETS

F.A.I. RTE.	SECTION	COUNTY	TOTAL SHEETS	SHEET NO.
57	(28-2)B-2; (28-1)B-2	FRANKLIN	598	237
		CONTRACT NO. 78884		
		ILLINOIS	FED. AID PROJECT	

4/8/2024 3:07:52 PM

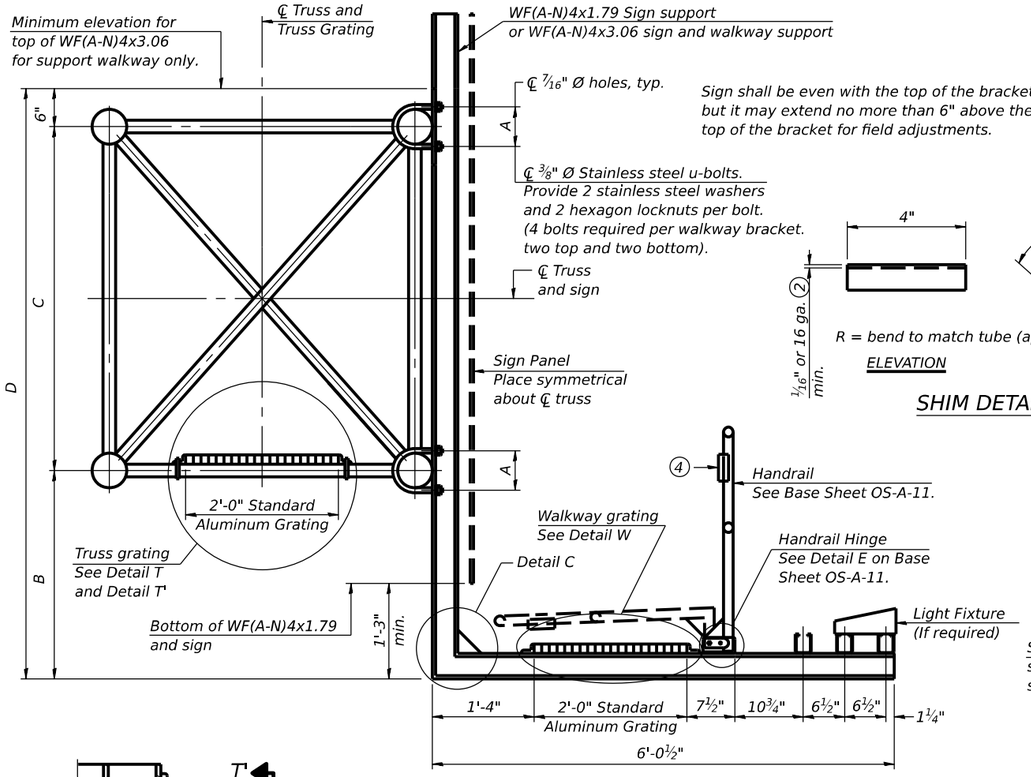

SECTION B-B

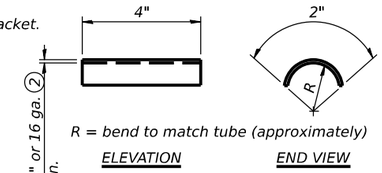

SHIM DETAIL

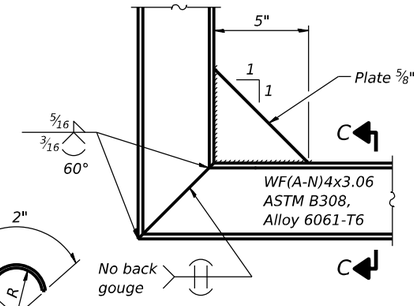

DETAIL C

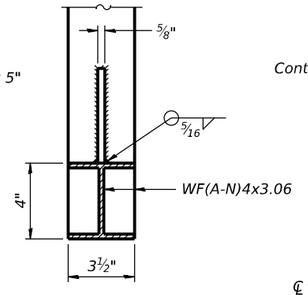

SECTION C-C

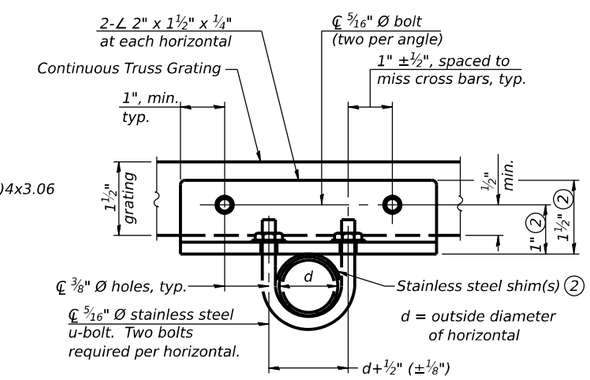

SECTION T-T

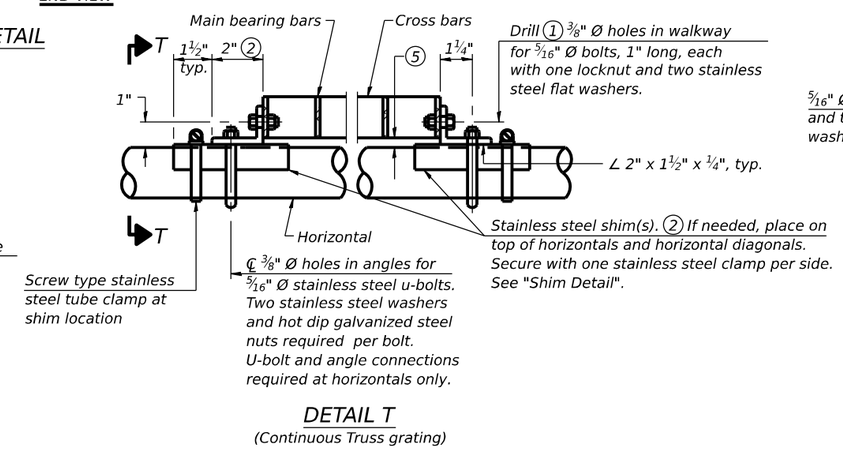

DETAIL T
(Continuous Truss grating)

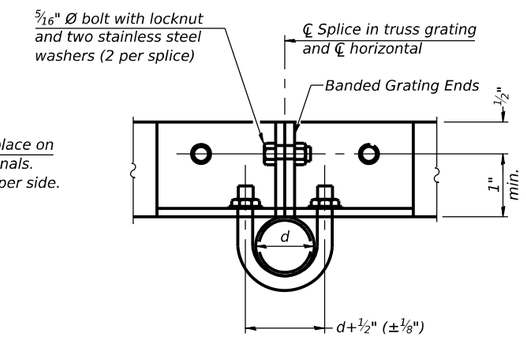

SECTION T'-T'

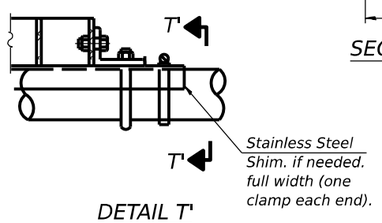

DETAIL T'
(Truss grating splice)

Details not shown same as Detail T.
Alternate materials may be used subject to the Engineer's review and approval.

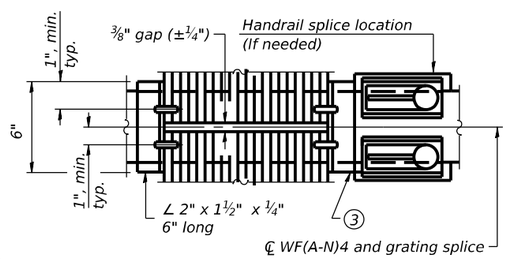

(AT WALKWAY GRATING SPLICE)

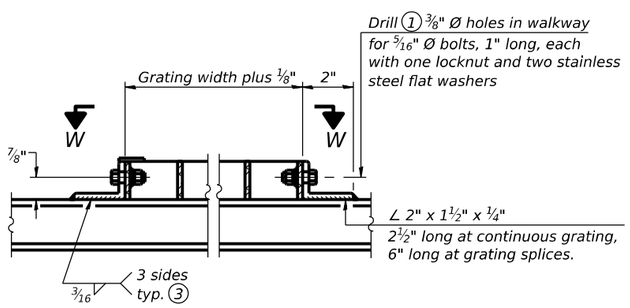

DETAIL W
(Walkway grating)

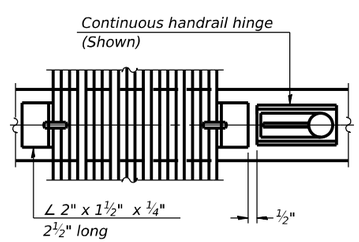

(CONTINUOUS WALKWAY GRATING)

SECTION W-W

SPECIFICATIONS FOR STANDARD ALUMINUM GRATING

Main Bearing Bars shall be 3/16" x 1½" on 1 3/16" centers and conform to ASTM B221 Alloy 6061-T6.

Cross bars shall be 3/16" x 1½" on 4" centers and conform to ASTM B221 Alloy 6063-T5 or 6061-T6.

OR

Aluminum Grating with modified "t" sections for main bearing bars shall meet the following requirements:

Main bars shall conform to ASTM B221 Alloy 6061-T6 and have a minimum section modulus equal to 0.0705 in.³ per bar, a depth of 1½", spaced on 1 3/16" centers.

Cross bars shall conform to ASTM B221 Alloy 6063-T5 or T-42 and spaced on 4" centers.

Structure Number	Station	A	⑥ B	C	⑥ D
9S028I057L078.8	108+87.00	6"	6'-3"	4'-6"	11'-3"

1. Drilling holes in grating may be done in shop or field, based on Contractor's preference and subject to accurate alignment.
2. Stainless steel shims shall be placed as shown in Detail T if needed to compensate for alignment variations between horizontal and diagonal pipes beyond adjustment provided by angles. Thicker shims may be used subject to shims performing properly.
3. If Handrail Joint present, weld angle to WF(A-N)4 and ¼" extension bars. (See Base Sheet OS-A-11.)
4. PL ⅛" x ½" x 2" welded to handrail posts to protect locations that contact grating.
5. Tube to grating gap may vary from 0 to ½", max. to align walkway, allow for camber, etc.
6. Based on actual height of tallest sign given on OS-A-1.

OS-A-10 5-15-2023

MODEL: Default
FILE NAME: I:\2021\6084\Cadd\Design\CAD_Sheets\OHSS_SHEETS\D9728884-010-OHSS_DETAILS.dgn

ABNA DESIGN FIRM REG. 184.002117

USER NAME =	DESIGNED - SEA	REVISED -	
	CHECKED - FH	REVISED -	
PLOT SCALE =	DRAWN - MBJ	REVISED -	
PLOT DATE =	CHECKED - SEA	REVISED -	

STATE OF ILLINOIS
DEPARTMENT OF TRANSPORTATION

OVERHEAD SIGN STRUCTURES
ALUMINUM WALKWAY DETAILS

SHEET 10 OF 15 SHEETS

F.A.I. RTE.	SECTION	COUNTY	TOTAL SHEETS	SHEET NO.
57	(28-2)B-2; (28-1)B-2	FRANKLIN	598	238

CONTRACT NO. 78884

ILLINOIS FED. AID PROJECT

4/8/2024 3:07:52 PM

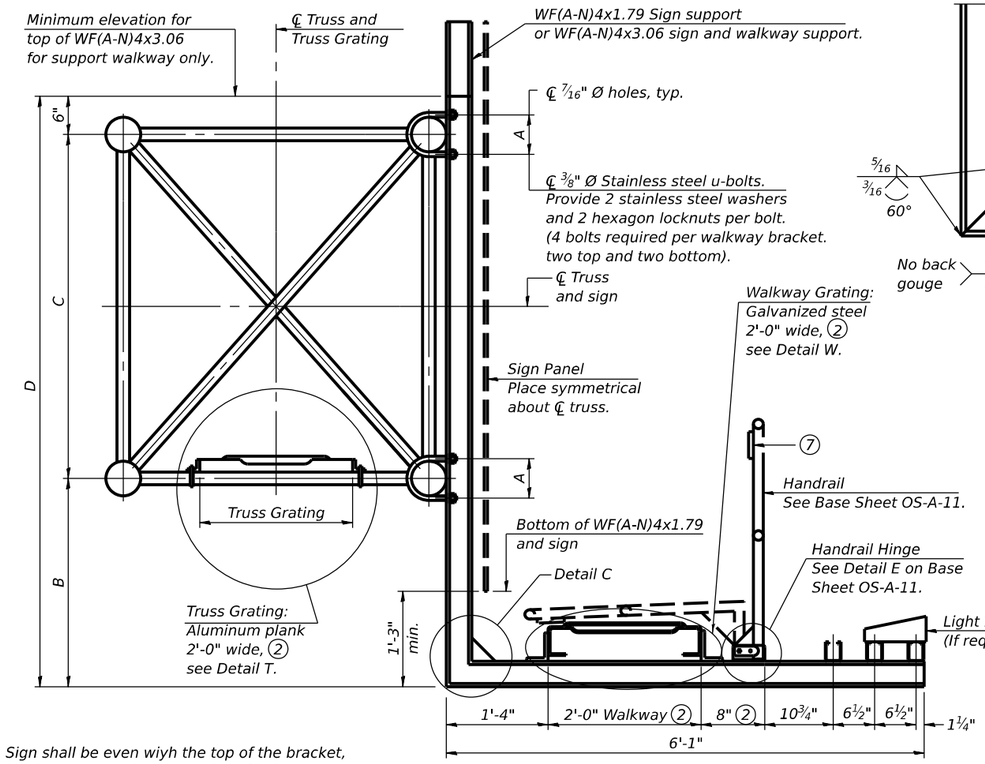

SECTION B-B

Sign shall be even wiyh the top of the bracket, but it may extend no more than 6" above the top of the bracket for field adjustments.

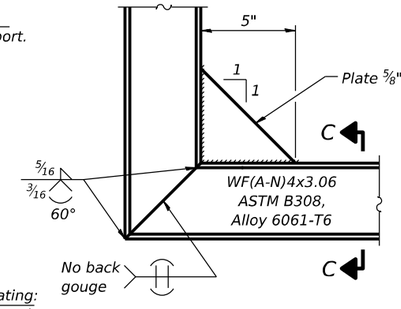

DETAIL C

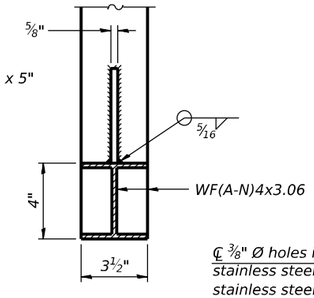

SECTION C-C

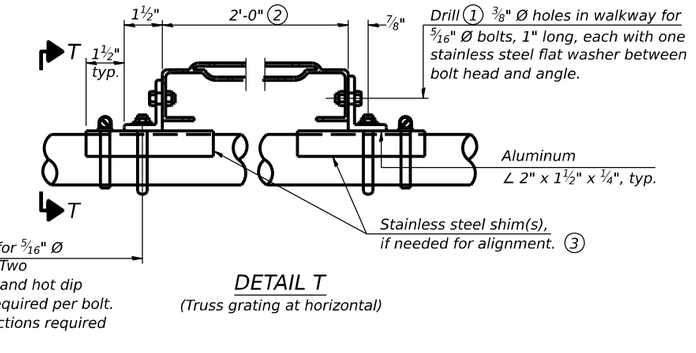

DETAIL T
(Truss grating at horizontal)

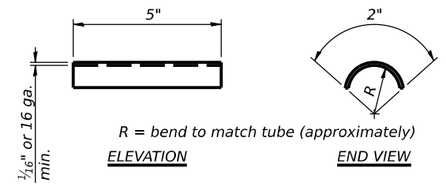

SHIM DETAIL

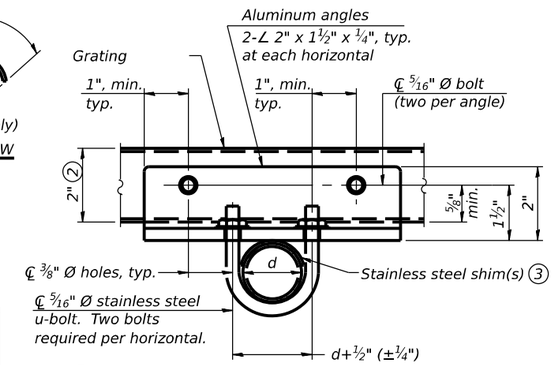

SECTION T-T
(Truss Grating Continuous)

d = outside diameter of horizontal

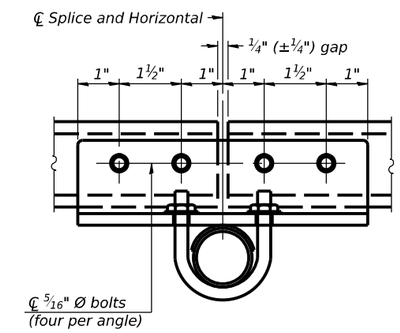

SECTION T-T
(Truss Grating Splice)

Alternate splice details and locations may be used subject to the Engineer's review and approval.

ALUMINUM TRUSS GRATING

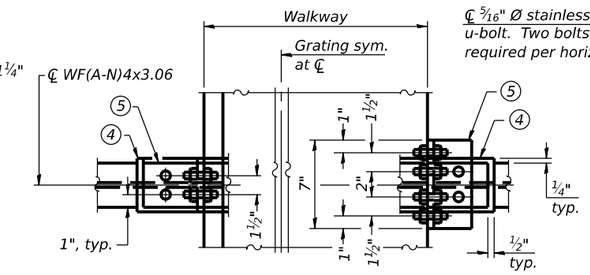

WALKWAY GRATING CONTINUOUS
AT WALKWAY GRATING SPLICE

SECTION W-W

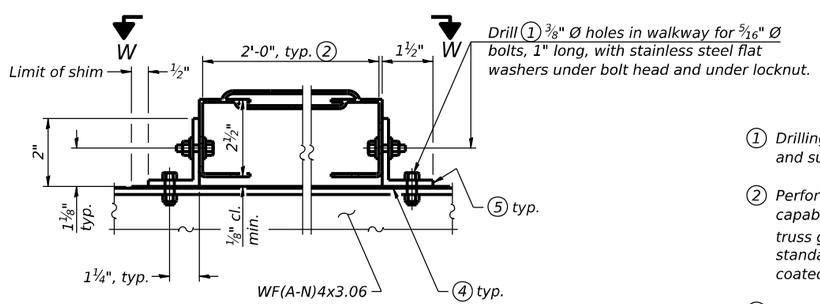

DETAIL W
GALVANIZED STEEL WALKWAY GRATING

(1) Drilling holes in grating may be done in shop or field, based on Contractor's preference and subject to accurate alignment.

(2) Perforated or expanded metal grating providing a skid resistant (non-serrated) surface and capable of supporting a 500 pound concentrated load with a 6'-0" clear span. Walkway and truss grating dimensions are nominal and may vary (width ±½", depth ±½") based on available standard sizes. Cut ends of grating shall be free of burrs or hazardous projections and coated with zinc-rich primer or equivalent.

(3) Stainless steel shims shall be placed under angles at horizontals and horizontal diagonals if needed to compensate for alignment variations and differences in horizontal diagonal pipe sizes beyond adjustment provided by angles. Secure with one stainless steel clamp per location, see "Shim Detail". Thicker shim plates may be used when needed subject to shims performing properly.

(4) 1/16" (or 16 ga.) x 2½" x 4" stainless steel shim adhered to top of WF(A-N)4x3.06 beneath each galvanized angle. Adhesives for shims shall be suitable for materials joined and full exposure conditions.

(5) Galvanized steel ∠ 2" x 2" x ¼", 3½" long with continuous grating, 7" long at grating splice.

(6) Details shown are considered equal alternatives to the Aluminum Walkway on Base Sheet OS-A-10 and may be substituted by Contractor at no change in contract cost.

(7) ℙ ⅛" x ½" x 2" welded to handrail posts to protect locations that contact grating.

(8) Based on actual height of tallest sign given on OS-A-1.

Structure Number	Station	A	(8) B	C	(8) D
9S028I057L078.8	108+87.00	6"	6'-3"	4'-6"	11'-3"

OS-A-10S 5-15-2023

ABNA DESIGN FIRM REG. 184.002117

USER NAME =	DESIGNED - SEA	REVISED -	
	CHECKED - FH	REVISED -	
PLOT SCALE =	DRAWN - MBJ	REVISED -	
PLOT DATE =	CHECKED - SEA	REVISED -	

STATE OF ILLINOIS
DEPARTMENT OF TRANSPORTATION

OVERHEAD SIGN STRUCTURES
ALTERNATE WALKWAY DETAILS

SHEET 11 OF 15 SHEETS

F.A.I. RTE.	SECTION	COUNTY	TOTAL SHEETS	SHEET NO.
57	(28-2)B-2; (28-1)B-2	FRANKLIN	598	239

CONTRACT NO. 78884
ILLINOIS FED. AID PROJECT

MODEL: Default
FILE NAME: J:\2021\60841\Cadd\Design\CAD_Sheets\OHSS SHEETS\D978884-011-OHSS DETAILS.dgn
4/8/2024 3:07:53 PM

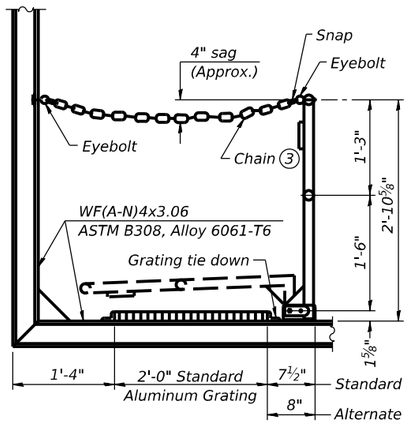

SIDE ELEVATION

(Showing safety chain w/o sign)

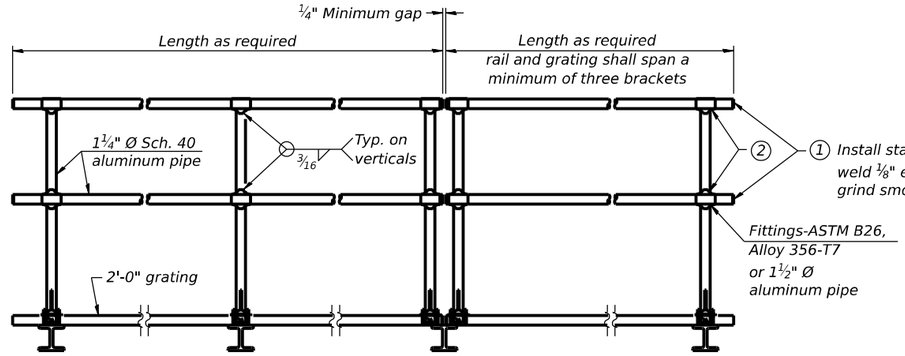

FRONT ELEVATION

(2) Horizontal handrail member shall be continuous thru fitting. Provide 7/16" Ø hole in fitting for ⅜" Ø bolt. Field drill 7/16" Ø hole in horizontal rail member. Provide locknut and two stainless steel washers for bolt. (Use 5/16" eyebolts in 7/16"Ø holes on top rail at ends only.)

HANDRAIL DETAILS

Handrail pipe shall be ASTM B241 or B429, Alloy 6063-T6 or Alloy 6061-T6.

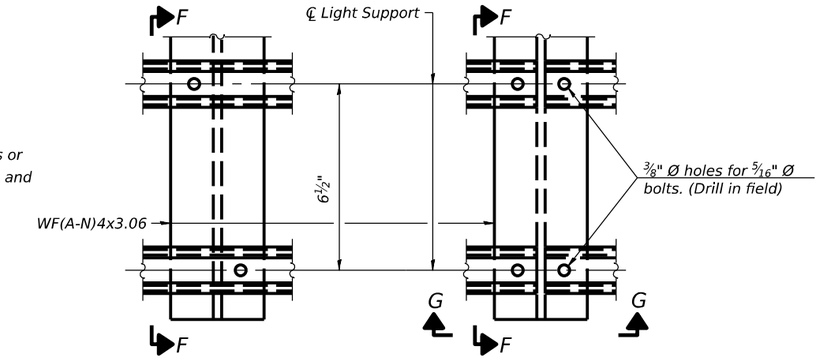

DETAIL F

DETAIL G

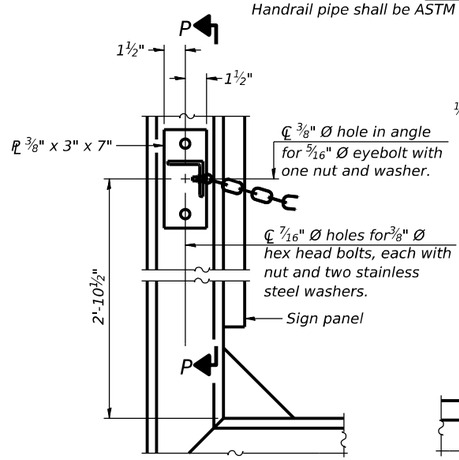

ALTERNATE SAFETY CHAIN ATTACHMENT

(With Sign Present)

Items not shown same as "Side Elevation" of "Handrail Details"

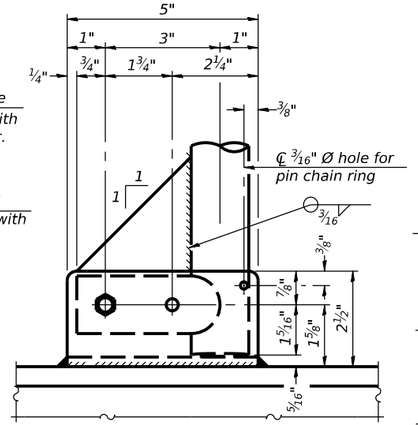

SIDE ELEVATION

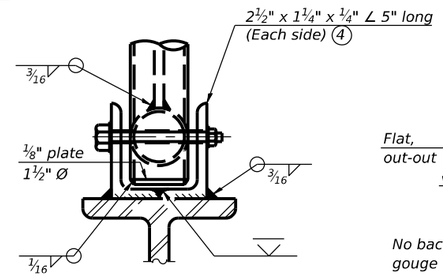

FRONT ELEVATION

See "Elevation" at right for dimensions.

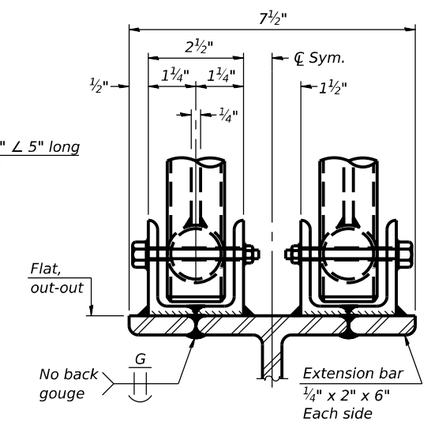

ELEVATION AT HANDRAIL JOINT (4)

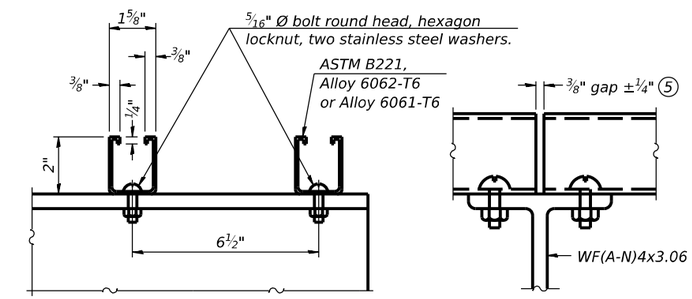

SECTION F-F

SECTION G-G

LIGHTING FIXTURE MOUNTS (IF REQUIRED)

(5) Field cut ends of light support channels shall be free of burrs or hazardous projections and coated with zinc-rich primer or equivalent.

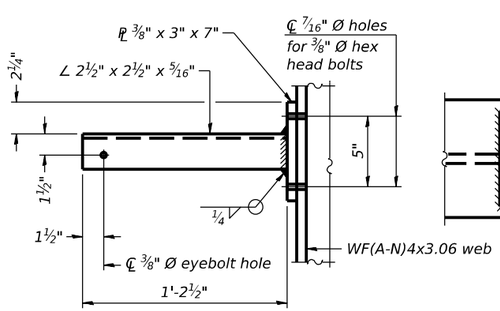

SECTION P-P

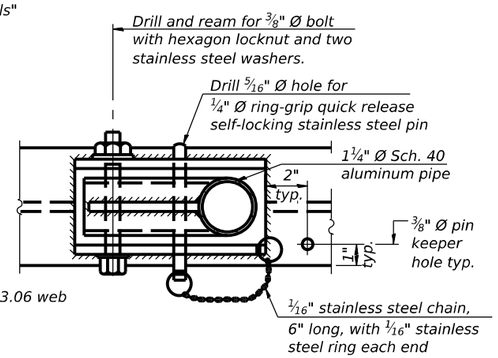

PLAN

DETAIL E HANDRAIL HINGE

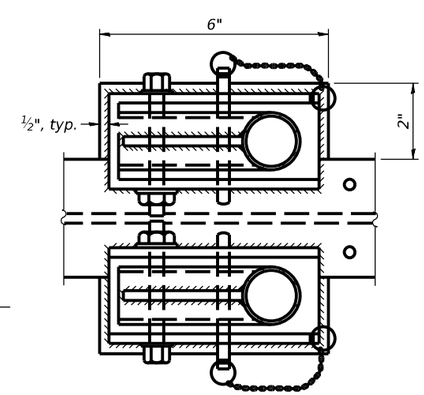

PLAN AT HANDRAIL JOINT

Details not shown same as "PLAN"

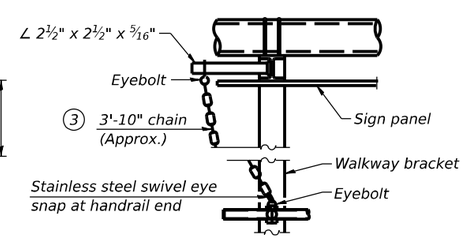

ALTERNATE SAFETY CHAIN ATTACHMENT

Details not shown similar to "Safety Chain" Details
(Walkway omitted for clarity)

(3) 3/16" Type 304L stainless steel chain, approximately 12 links per foot.

(4) Extrusions may be used in lieu of the details shown, with approval of the Engineer.

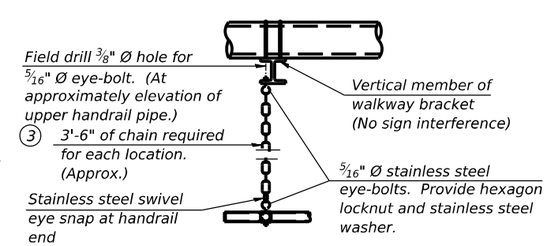

SAFETY CHAIN

One required for each end of each walkway.

OS-A-11 5-15-2023

MODEL: Default
FILE NAME: J:\2021\6084\Cadd\Design\CAD_Sheets\OHSS SHEETS\D9788844-012-OHSS DETAILS.dgn
4/8/2024 3:07:54 PM

ABNA DESIGN FIRM REG. 184.002117

USER NAME =	DESIGNED - SEA	REVISED -	
	CHECKED - FH	REVISED -	
PLOT SCALE =	DRAWN - MBJ	REVISED -	
PLOT DATE =	CHECKED - SEA	REVISED -	

STATE OF ILLINOIS
DEPARTMENT OF TRANSPORTATION

OVERHEAD SIGN STRUCTURES
ALUMINUM HANDRAIL DETAILS

SHEET 12 OF 15 SHEETS

F.A.I. RTE.	SECTION	COUNTY	TOTAL SHEETS	SHEET NO.
57	(28-2)B-2; (28-1)B-2	FRANKLIN	598	240

CONTRACT NO. 78884

ILLINOIS FED. AID PROJECT

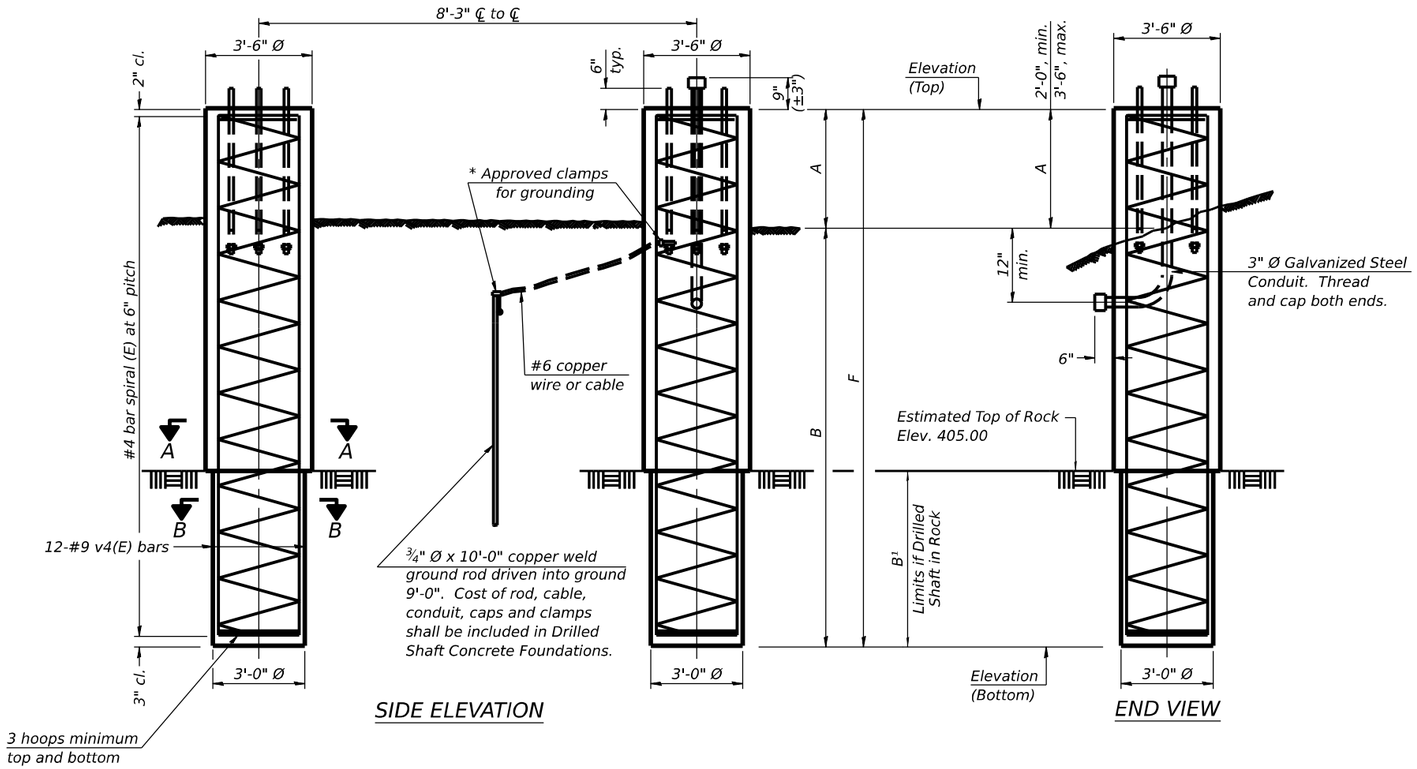

SIDE ELEVATION

END VIEW

BAR LIST - EACH FOUNDATION

Bar	Number	Size	Length	Shape
v4(E)	24	#9	F less 5"	
#4 bar spiral (E) - see Side Elevation				

NOTES:

The foundation dimensions shown are based on the presence of mostly cohesive soils with an average Unconfined Compressive Strength (Qu) of at least 1.25 tsf, which must be determined by previous soil investigations at the jobsite. When other conditions are indicated, the boring data will be included in the plans and the foundation dimensions shown will be the result of site specific designs.

If the conditions encountered are different than those indicated, the Contractor shall notify the Engineer to determine if the foundation dimensions need to be modified. If dimensions "B" or "F" are revised by more than 12" by the Contractor, "as-built" plans shall be prepared and submitted to the District Bureau of Operations for future reference.

No sonotubes or decomposable forms shall be used below the lower conduit entrance.

Permanent metal forms or other shielding may not be left in place below that elevation without the Engineer's written permission.

Concrete shall be placed monolithically, without construction joints.

Backfill shall be placed per Article 502 of Standard Specification and prior to erection of support column.

A normal surface finish followed by a Concrete Sealer application will be required on concrete surfaces above the lowest elevation 6" below finished ground line. Cost included in Drilled Shaft Concrete Foundation.

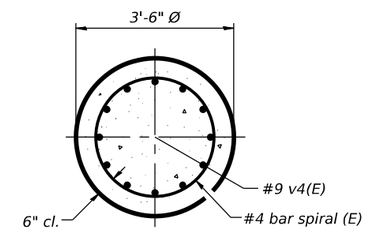

SECTION A-A

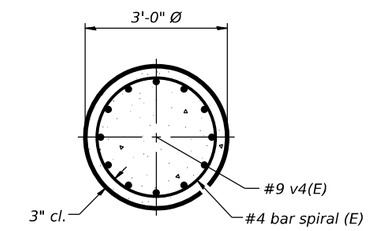

SECTION B-B

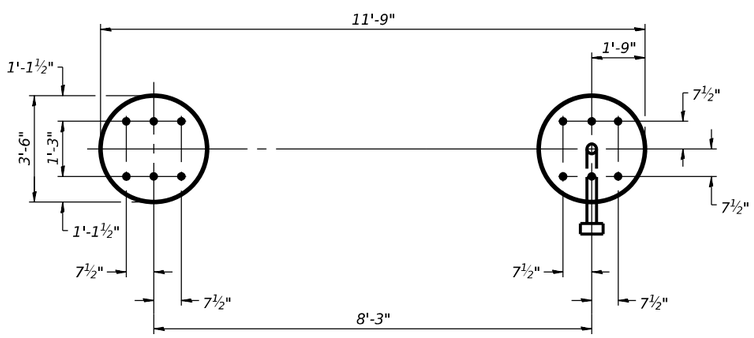

PLAN

For anchor rod size and placement, see Support Frame Detail Sheet.

* Anchor rod shall be ground or filed to bright metal at clamp and cable connection location.

DETAILS FOR 10" Ø SUPPORT FRAME TYPE I-A or II-A TRUSS

Structure Number	Station	Left Foundation					Right Foundation						DS in Rock Concrete (Cu. Yds.)	Class DS Concrete (Cu. Yds.)
		Elevation Top	Elevation Bottom	A	B	F	Elevation Top	Elevation Bottom	A	B	B¹	F		
9S028I057L078.8	108+87.00						418.70	399.87	2'-10"	16'-0"	5'-0"	18'-10"	2.6	9.9

MODEL: Default
FILE NAME: J:\2021\60841\Cadd\Design\CAD_Sheets\OHSS SHEETS\D9788844-013-OHSS DETAILS.dgn

ABNA DESIGN FIRM REG. 184.002117

USER NAME =	DESIGNED - SEA	REVISED -	
	CHECKED - FH	REVISED -	
PLOT SCALE =	DRAWN - MBJ	REVISED -	
PLOT DATE =	CHECKED - SEA	REVISED -	

STATE OF ILLINOIS
DEPARTMENT OF TRANSPORTATION

OVERHEAD SIGN STRUCTURES
DRILLED SHAFT DETAILS

SHEET 13 OF 15 SHEETS

F.A.I. RTE.	SECTION	COUNTY	TOTAL SHEETS	SHEET NO.
57	(28-2)B-2; (28-1)B-2	FRANKLIN	598	241
		CONTRACT NO. 78884		
	ILLINOIS	FED. AID PROJECT		

4/8/2024 3:07:54 PM

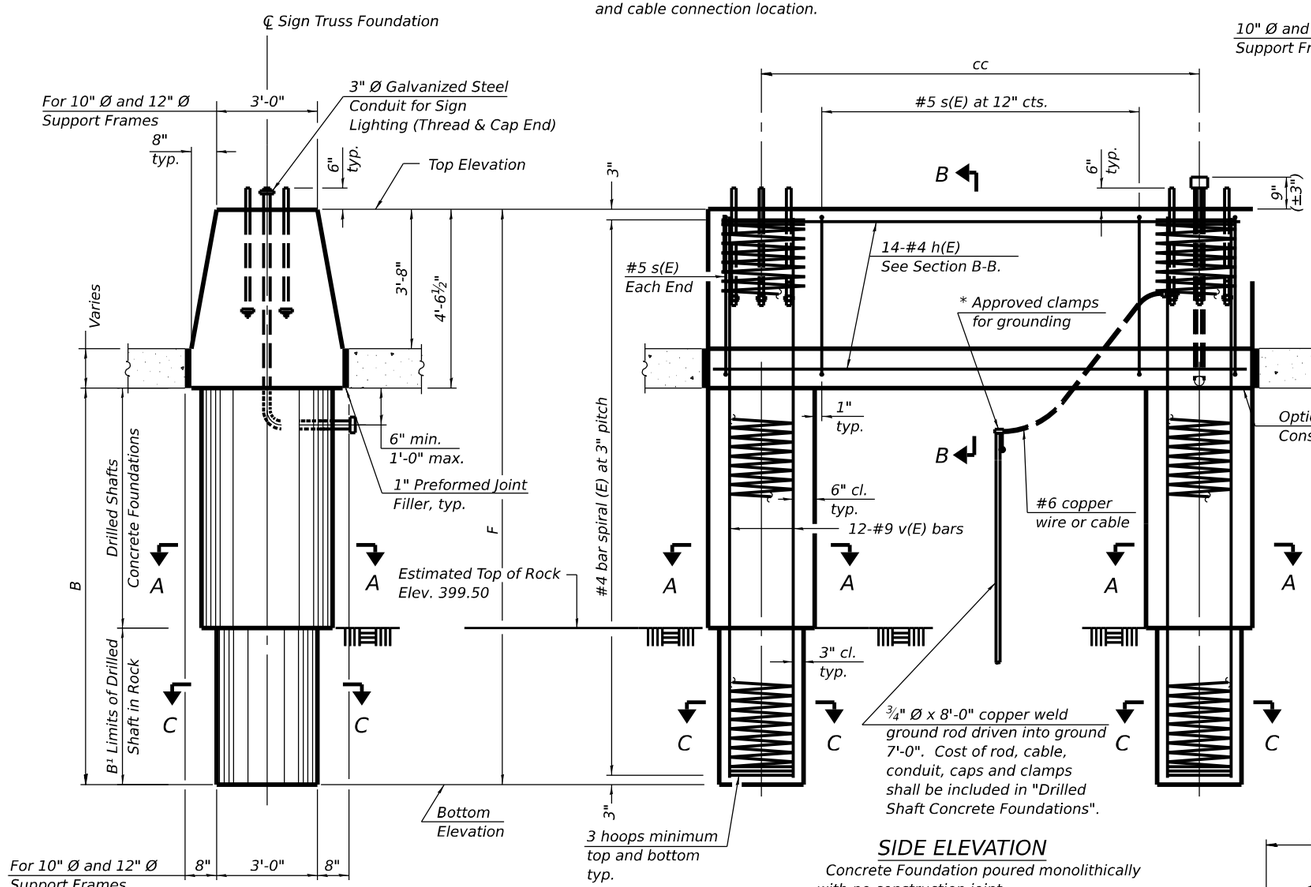

END VIEW

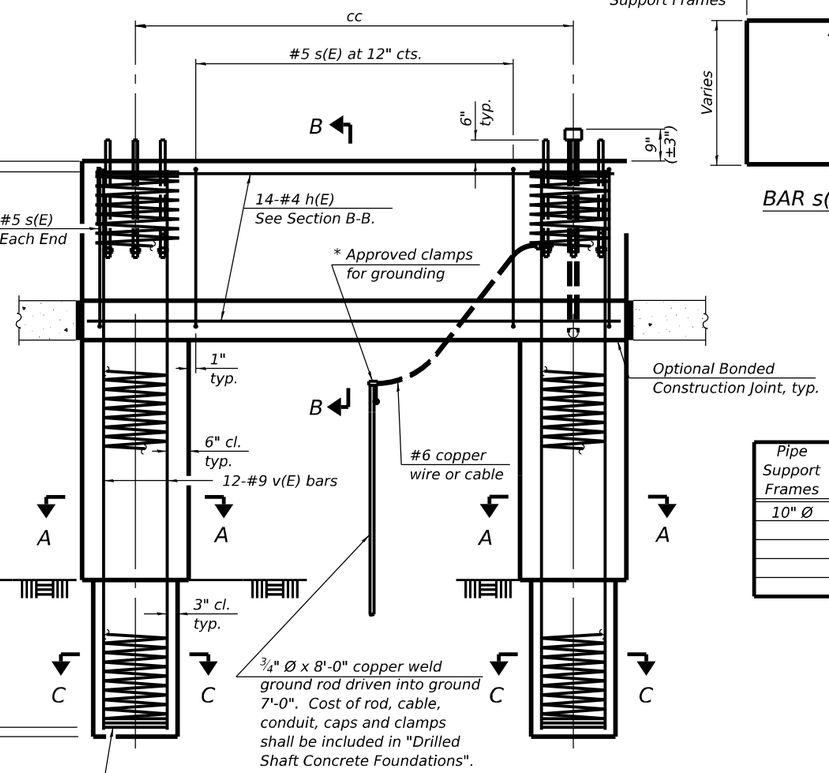

SIDE ELEVATION

Concrete Foundation poured monolithically with no construction joint.

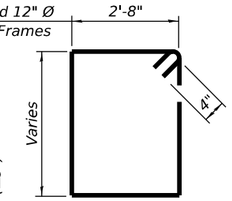

BAR s(E)

NOTES:

The foundation dimensions shown are based on the presence of mostly cohesive soils with an average Unconfined Compressive Strength (Qu) of at least 1.25 tsf, which must be determined by previous soil investigations at the jobsite. When other conditions are indicated, the boring data will be included in the plans and the foundation dimensions shown will be the result of site specific designs.

If the conditions encountered are different than those indicated, the Contractor shall notify the Engineer to determine if the foundation dimensions need to be modified. If dimensions "B" or "F" are revised by more than 12" by the Contractor, "as-built" plans shall be prepared and submitted to the District Bureau of Operations for future reference.

No sonotubes or decomposable forms shall be used below the lower conduit entrance.

Permanent metal forms or other shielding may not be left in place below that elevation without the Engineer's written permission.

Concrete shall be placed monolithically, without construction joints.

Backfill shall be placed per Article 502 of Standard Specification and prior to erection of support column.

A normal surface finish followed by a Concrete Sealer application will be required on concrete surfaces above the lowest elevation 6" below finished ground line. Cost included in Drilled Shaft Concrete Foundation.

BAR LIST - EACH FOUNDATION

Bar	Number	Size	Length	Shape
h(E)	14	#4	M less 4"	
s(E)	Varies	#5	Varies	
v(E)	24	#9	F less 0'-5"	
#4(E) bar spiral. See Side Elevation				

10" Ø and 12" Ø Support Frame

Pipe Support Frames	cc	M	a	a/2
10" Ø	8'-3"	11'-9"	1'-3"	7½"

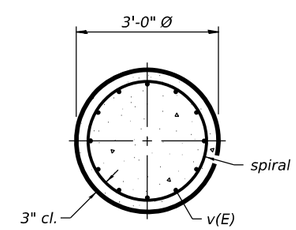

SECTION C-C

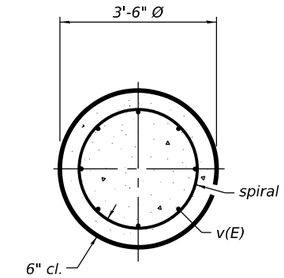

SECTION A-A

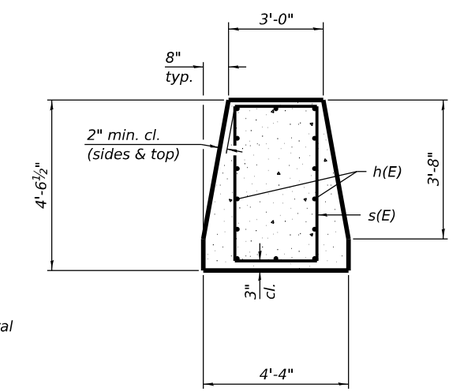

SECTION B-B

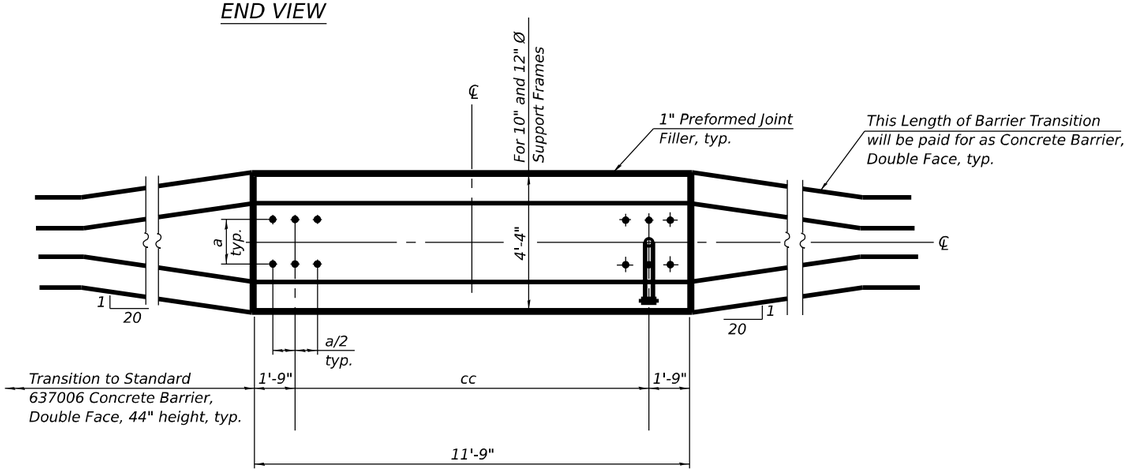

PLAN

Structure Number	Station	Left Foundation					Drilled Shaft in Rock (Cu. Yds.)	Class DS Concrete (Cu. Yds.)
		Elevation Top	Elevation Bottom	B	B¹	F		
9S028I057L078.8	108+87.00	420.95	394.40	22'-0"	5'-0"	26.55	2.6	19.9

MODEL: Default
FILE NAME: J:\2021\6084\Cadd\Design\CAD_Sheets\OHSS SHEETS\D978884-014-OHSS DETAILS.dgn
4/8/2024 3:07:55 PM

ABNA DESIGN FIRM REG. 184.002117

USER NAME =	DESIGNED - SEA	REVISED -	
	CHECKED - FH	REVISED -	
PLOT SCALE =	DRAWN - MBJ	REVISED -	
PLOT DATE =	CHECKED - SEA	REVISED -	

STATE OF ILLINOIS
DEPARTMENT OF TRANSPORTATION

OVERHEAD SIGN STRUCTURES
MEDIAN SUPPORT FOUNDATION DETAILS

SHEET 14 OF 15 SHEETS

F.A.I. RTE.	SECTION	COUNTY	TOTAL SHEETS	SHEET NO.
57	(28-2)B-2; (28-1)B-2	FRANKLIN	598	242
		CONTRACT NO. 78884		
		ILLINOIS	FED. AID PROJECT	

Illinois Department of Transportation
Division of Highways
District 9

SOIL BORING LOG

Page 1 of 1

Date 10/19/23

ROUTE I-57 (FAI 57) D9 I-57 Add **DESCRIPTION** Overhead Sign Truss Foundation **LOGGED BY** L. Estel

SECTION Lane-5;(28-2)B-2);(28-1)B-2 **LOCATION** SB North of Rend Lake Rest Area (Median), **SEC.** 7, **TWP.** 5S, **RNG.** 3E, **PM**

COUNTY Franklin **DRILLING METHOD** HSA (8" OD, 3.25 ID) **HAMMER TYPE** AUTO SPT 140 lbs (HE 86.5 %)

STRUCT. NO.
Station

BORING NO. 1-ST
Station
Offset 32.0ft E of CL of SBL
Ground Surface Elev. 413.6 ft

Surface Water Elev. ft
Stream Bed Elev. ft

Groundwater Elev.:
First Encounter ft
Upon Completion ft
After Hrs. ft

Description	Elev.	DEPTH (ft)	BLOWS	UCS Qu (tsf)	MOIST (%)
Medium Stiff Brown, Moist LOAM to CLAY LOAM			3		
			4	0.9	10
			3	S	
	409.10				
Stiff Brown and Grey, Moist CLAY to CLAY LOAM		-5	3		
			4	1.0	29
			4	S	
			4		
			3	1.65	17
			5	S	
		-10	3		
			3	1.0	18
			6	S	
			WOH		
			5	1.25	18
			5	S	
	399.10				
(Medium Dense)		-15	12		
Hard Tannish-Brown, Moist to Dry SANDSTONE			50/0"		10
[End of boring]					
		-20			

Bottom of hole @ 15 ft

No free water encountered

To convert "N" values to "N60", multiply by 1.44; Hammer Efficiency = 86.5%

Ground surface elevation referenced to BM 8A, Square Cut on E. Side of Ex. Sign Truss Conc. Fdn.; EL. 415.50

Lat./Long. coordinates of boring location shown in left margin

-25 -30 -35 -40

The Unconfined Compressive Strength (UCS) Failure Mode is indicated by (B-Bulge, S-Shear, P-Penetrometer, E-Estimated)
Abbreviations W.O.H - Sampler Advanced By Weight of Hammer, W.O.P - Advanced by Weight of Pipe, B.S. - Before Seating
The SPT (N value) is the sum of the last two blow values in each sampling zone (AASHTO T206) BBS, from 137 (Rev. 8-99)

File Name S:\MATERIALS GEOTECHNICAL UNIT\GINT\PROJECTS\PROJECTS FILE\FRANKLIN 028\POINT LOCATIONS\78884 SIGN TRUSS REND LAKE REST AREA.GPJ Data Template D6TEMPLT.GDT Date Printed 1/4/24
Latitude 38 05 54.67 Longitude -88 54 42.37 Datum NAD83 Job Number

Illinois Department of Transportation
Division of Highways
District 9

SOIL BORING LOG

Page 1 of 1

Date 10/19/23

ROUTE I-57 (FAI 57) D9 I-57 Add **DESCRIPTION** Overhead Sign Truss Foundation **LOGGED BY** L. Estel

SECTION Lane-5;(28-2)B-2);(28-1)B-2 **LOCATION** SB North of Rend Lake Rest Area (DL Shdr), **SEC.** 7, **TWP.** 5S, **RNG.** 3E, **PM**

COUNTY Franklin **DRILLING METHOD** HSA (8" OD, 3.25 ID) **HAMMER TYPE** AUTO SPT 140 lbs (HE 86.5 %)

STRUCT. NO.
Station

BORING NO. 2-ST
Station
Offset 27.0ft W of CL of Ramp
Ground Surface Elev. 409.3 ft

Surface Water Elev. ft
Stream Bed Elev. ft

Groundwater Elev.:
First Encounter ft
Upon Completion ft
After Hrs. ft

Description	Elev.	DEPTH (ft)	BLOWS	UCS Qu (tsf)	MOIST (%)
Stiff Brown, Moist SILTY CLAY LOAM			5		
			6	1.3	19
			6	S	
	404.80				
Hard Tannish-Brown, Moist to Dry SANDSTONE		-5	50/4"		12
SANDSTONE - Performed Modified SPT Test @ 7.0 ft qu = 26.7 ksf					
SANDSTONE - Performed Modified SPT Test @ 9.5 ft qu = 21.4 ksf		-10			
[End of boring]					
		-15			
		-20			

Bottom of hole @ 10.6 ft

No free water encountered

To convert "N" values to "N60", multiply by 1.44; Hammer Efficiency = 86.5%

Ground surface elevation referenced to BM 8A, Square Cut on E. Side of Ex. Sign Truss Conc. Fdn.; EL. 415.50

Lat./Long. coordinates of boring location shown in left margin

-25 -30 -35 -40

The Unconfined Compressive Strength (UCS) Failure Mode is indicated by (B-Bulge, S-Shear, P-Penetrometer, E-Estimated)
Abbreviations W.O.H - Sampler Advanced By Weight of Hammer, W.O.P - Advanced by Weight of Pipe, B.S. - Before Seating
The SPT (N value) is the sum of the last two blow values in each sampling zone (AASHTO T206) BBS, from 137 (Rev. 8-99)

File Name S:\MATERIALS GEOTECHNICAL UNIT\GINT\PROJECTS\PROJECTS FILE\FRANKLIN 028\POINT LOCATIONS\78884 SIGN TRUSS REND LAKE REST AREA.GPJ Data Template D6TEMPLT.GDT Date Printed 1/4/24
Latitude 38 05 54.42 Longitude -88 54 43.46 Datum NAD83 Job Number

STAGE 1–A BEFORE STAGE 1

TRAFFIC

1. INSTALL SIGNING PER TRAFFIC CONTROL STANDARDS, DETAIL, AS REQUIRED.
2. WORK SHALL BE DONE AT NIGHT.

ROADWAY CONSTRUCTION

1. MILL AND OVERLAY INSIDE AND OUTSIDE SHOULDER AND EDGE LINE REPAIR.
2. MILL SURFACES SHALL BE RESURFACED BEFORE OPENING THE SHOULDER.

STAGE 1

TRAFFIC

1. INSTALL SIGNING PER TRAFFIC CONTROL STANDARDS, DETAIL, AS REQUIRED.
2. SET UP SHOULDER CLOSURES FOR SHOULDER CONSTRUCTION.
3. SHIFT 2 LANES OF TRAFFFIC 2' ONTO THE INSIDE SHOULDER AT 1:70, 500' BEFORE AREAS OF SHOULDER REMOVAL
4. SHIFT TRAFFIC ONTO MAINLINE AT 1:70, 25' AFTER OUTSIDE SHOULDER REMOVAL AREAS

ROADWAY CONSTRUCTION

1. REMOVE EXISTING OUTSIDE SHOULDERS AT UNDERPASSES EAST FRANKLIN ROAD SN 028-0055, IL 154 SN 028-0059,FRANKLIN CEMETERY ROAD SN 028-0056,MARCUM BRANCH ROAD SN 028-0053, NORTH ST. SN 041-0113.
2. REMOVE EXISTING OUTSIDE SHOULDERS AT BRIDGE APPROACH (OVER MARCUM BRANCH SN 028-0012, GUN CREEK SN 028-0013)
3. CONSTRUCT FULL DEPTH HMA SHOULDERS

STAGE 2

TRAFFIC

1. INSTALL SIGNING PER TRAFFIC CONTROL STANDARDS, DETAIL, AS REQUIRED.
2. INSTALL "ALL TRUCKS USE RIGHT LANE" SIGN AT 2 MILE SPACING THROUGHOUT THE LIMITS OF CONSTRUCTION.
3. SHIFT 2 LANES OF TRAFFFIC TOWARD THE OUTSIDE SHOULDER AT A RATE 1:55, 1000'.
4. MAINTAIN TRAFFIC ON THE EXISTING LANES AND OUTSIDE SHOULDER TO CONSTRUCT LEFT LANE AND INSIDE SHOULDER.
5. INSTALL TEMPORARY CONCRETE BARRIER FOR BRIDGE CONSTRUCTION.
6. KEEP TRAFFIC OPEN TO 2 LANES DURING PEAK HOUR.

ROADWAY CONSTRUCTION

1. INSTALL DRAINAGE STRUCTURES AND PIPES.
2. CONSTRUCT THE NEW INSIDE LANE AND INSIDE SHOULDER.
3. CONSTRUCT INSIDE LANE AND INSIDE SHOULDER FOR NEW SN 028-0090/SN 028-0091.
4. CONSTRUCT CONCRETE BARRIER.
5. CONSTRUCT APPROACH PAVEMENT AND PCC CONNECTOR.

STAGE 3

TRAFFIC

1. INSTALL SIGNING PER TRAFFIC CONTROL STANDARDS, DETAIL, AS REQUIRED.
2. SHIFT 2 LANES OF TRAFFIC TOWARD THE INSIDE SHOULDER AT A RATE OF 1:55 TAPER.
3. MAINTAIN TRAFFIC ON THE INSIDE LANE AND INSIDE SHOULDER TO CONSTRUCT OUTSIDE OF SN 028-0090/SN 028-0091 AND OUTSIDE OF THE NEW BRIDGE OVER GUN CREEK (OLD SN 028-0013/SN 028-0014).
4. INSTALL TEMPORARY CONCRETE BARRIER FOR BRIDGE CONSTRUCTION.
5. KEEP TRAFFIC OPEN TO 2 LANES.

ROADWAY CONSTRUCTION

1. CONSTRUCT OUTSIDE PORTION OF SN 028-0090/SN 028-0091 AND NEW BRIDGE OVER GUN CREEK (OLD SN 028-0013/SN 028-0014).
2. CONSTRUCT APPROACH PAVEMENT AND PCC CONNECTOR.
3. CONSTRUCT FULL DEPTH PAVEMENT IN THE MIDDLE AND OUTSIDE LANE.

STAGE 4

TRAFFIC

1. INSTALL SIGNING PER TRAFFIC CONTROL STANDARDS, DETAIL, AS REQUIRED.
2. SET UP LANE CLOSURES FOR FULL DEPTH PAVEMENT CONSTRUCTION AT UNDERPASSES AND APPROACH TO BRIDGE
3. KEEP 2 LANES OF TRAFFIC OPEN DURING PEAK HOURS.
4. SHIFT 1 LANE OF TRAFFIC TO THE OUTSIDE AND 1 LANE OF TRAFFIC TO THE INSIDE.

ROADWAY CONSTRUCTION

1. CONSTRUCT FULL DEPTH PAVEMENT IN THE MIDDLE LANE.
2. ALL WORK TO BE DONE DURING OFF PEAK HOURS.

STAGE 5

TRAFFIC

1. INSTALL SIGNING PER TRAFFIC CONTROL STANDARDS, DETAIL, AS REQUIRED.
2. SET UP LANE CLOSURES FOR FULL DEPTH PAVEMENT CONSTRUCTION AT UNDERPASSES.
3. KEEP 2 LANES OF TRAFFIC OPEN.
4. SHIFT TRAFFIC TO THE INSIDE.

ROADWAY CONSTRUCTION

1. CONSTRUCT FULL DEPTH PAVEMENT IN THE OUTSIDE LANE.
2. REMOVE AND REPLACE OUTSIDE SHOULDER TO MATCH PROPOSED GRADE OF ROADWAY.
3. INSTALL GUARDRAIL ALONG OUTSIDE SHOULDERS.

STAGE 6

TRAFFIC

1. INSTALL SIGNING PER TRAFFIC CONTROL STANDARDS, DETAIL, AS REQUIRED.

ROADWAY CONSTRUCTION

1. MILL AND OVERLAY TWO EXISTING LANES.
2. INSTALL STRIPING
3. MILL SURFACES SHALL BE RESURFACED BEFORE OPENING THE LANE FOR PEAK HOUR TRAFFIC.

MAINTENANCE OF TRAFFIC GENERAL NOTES

1. THE CONTRACTOR SHALL MAINTAIN POSITIVE DRAINAGE AS REQUIRED OR AS DIRECTED BY THE ENGINEER THROUGHOUT THE CONSTRUCTION ZONE FOR THE PERIOD OF CONSTRUCTION. THE WORK SHALL BE INCLUDED IN THE COST OF EARTHWORK AND DRAINAGE STRUCTURES.
2. ALL ADVANCE "ROAD WORK" SIGNS, W20-1 SERIES, AS SHOWN ON THE PLANS, REFERENCED IN THE STANDARDS OR AS DIRECTED BY THE ENGINEER, SHALL BE EQUIPED WITH A TYPE B MONODIRECTIONAL FLASHING LIGHT AND 18"X18" ORANGE WARNING FLAG. THE COST OF THIS WORK SHALL BE INCLUDED IN THE COST FOR TRAFFIC CONTROL AND PROTECTION.
3. EXISTING PAVEMENT MARKINGS IN CONFLICT WITH MAINTENANCE OF TRAFFIC MARKING SHALL BE REMOVED.

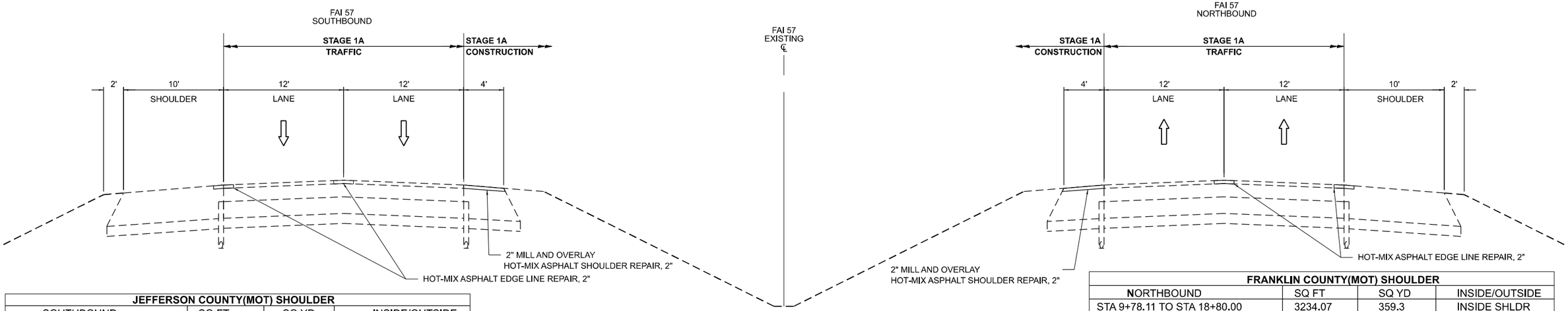

JEFFERSON COUNTY(MOT) SHOULDER			
SOUTHBOUND	SQ FT	SQ YD	INSIDE/OUTSIDE
STA 11+21.89 TO STA 22+10.00	4558.99	506.6	INSIDE SHLDR
STA 15+70.00 TO STA 62+64.51(BK)	46903.09	5211.5	OUTSIDE SHLDR
STA 62+65.57 (AH)TO STA 97+31.80	34667.93	3852.0	OUTSIDE SHLDR
STA 97+31.80 TO STA 97+72.10	402.82	44.8	OUTSIDE SHLDR
STA 97+72.10 TO STA 98+59.20	865.28	96.1	OUTSIDE SHLDR
STA 109+07.80 TO STA 113+80.00	4727.48	525.3	OUTSIDE SHLDR
STA 112+15.00 TO STA 126+60.00	6384.74	709.4	INSIDE SHLDR
STA 120+20.00 TO STA 125+94.70	5805.45	645.0	OUTSIDE SHLDR
STA 132+35.00 TO STA 226+02.00	93568.64	10396.5	OUTSIDE SHLDR
NORTHBOUND			
STA 11+21.89 TO 17+35.00	2345.18	260.6	INSIDE SHLDR
STA 15+70.00 TO 62+64.51(BK)	46987.12	5220.8	OUTSIDE SHLDR
STA 62+65.57 (AH)TO 97+18.40	34522.81	3835.9	OUTSIDE SHLDR
STA 97+18.50 TO STA 97+58.70	402.82	44.8	OUTSIDE SHLDR
STA 97+58.70 TO STA 101+20.70	3623.82	402.6	OUTSIDE SHLDR
STA 107+40.00 TO STA 121+85.00	5763.49	640.4	INSIDE SHLDR
STA 108+18.20 TO STA 113+80.00	5620.72	624.5	OUTSIDE SHLDR
STA 120+20.00 TO STA 125+58.60	5328.74	592.1	OUTSIDE SHLDR
STA 136+52.80 TO STA 226+02.00	89637.52	9959.7	OUTSIDE SHLDR

STAGE 1A TYPICAL SECTION

STA 9+78.11 TO STA 307+00.00 (FRANKLIN COUNTY)

STA 11+21.89 TO STA 233+82.75 (JEFFERSON COUNTY)

FRANKLIN COUNTY(MOT) SHOULDER			
SOUTHBOUND	SQ FT	SQ YD	INSIDE/OUTSIDE
STA 9+78.11 TO STA 14+05.00	1554.78	172.8	INSIDE SHLDR
STA 12+40.00 TO STA 50+00.00(BK)	37600.00	4177.8	OUTSIDE SHLDR
STA 49+99.31(AH) TO STA 99+40.00	49406.91	5489.7	OUTSIDE SHLDR
STA 93+00.00 TO STA 101+64.25	3646.16	405.1	INSIDE SHLDR
STA 101+64.25 TO STA 103+75.75	BRIDGE OMMISSION		
STA 103+75.75 TO STA 107+65.00	1523.57	169.3	INSIDE SHLDR
STA 111+72.00 TO STA 130+97.70	19196.99	2133.0	OUTSIDE SHLDR
STA 142.31.60 TO STA 157+19.80	14337.78	1593.1	OUTSIDE SHLDR
STA 163+61.10 TO STA 173+85.00	10193.32	1132.6	OUTSIDE SHLDR
STA 167+45.00 TO 176+14.31(BK)	3460.29	384.5	INSIDE SHLDR
STA 176+15.00(AH) TO 180+80.00	1803.75	200.4	INSIDE SHLDR
STA 179+15.00 TO 186+99.20	7804.19	867.1	OUTSIDE SHLDR
STA 196+84.90 TO 200+00.00(BK)	2764.23	307.1	OUTSIDE SHLDR
STA 200+00.07(AH) TO STA 227+00.00	27080.85	3009.0	OUTSIDE SHLDR
STA 220+60.00 TO 233+95.00	4934.65	548.3	INSIDE SHLDR
STA 232+30.00 TO STA 242+97.43(BK)	10788.03	1198.7	OUTSIDE SHLDR
STA 243+00.98(AH) TO STA 280+75.00	37740.22	4193.4	OUTSIDE SHLDR
STA 274+35.00 TO STA 287+60.00	5794.03	643.8	INSIDE SHLDR
STA 285+95.00 TO STA 301+40.00	15450.00	1716.7	OUTSIDE SHLDR
STA 295+00.00 TO STA 303+52.67	3606.07	400.7	INSIDE SHLDR
STA 303+67.69 TO STA 305+41.72	BRIDGE OMMISSION		
STA 305+26.62 TO STA 307+00.00	653.44	72.6	INSIDE SHLDR

FRANKLIN COUNTY(MOT) SHOULDER			
NORTHBOUND	SQ FT	SQ YD	INSIDE/OUTSIDE
STA 9+78.11 TO STA 18+80.00	3234.07	359.3	INSIDE SHLDR
STA 12+40.00 TO STA 50+00.00(BK)	37600.00	4177.8	OUTSIDE SHLDR
STA 49+99.31(AH) TO STA 99+40.00	49406.91	5489.7	OUTSIDE SHLDR
STA 97+75.00 TO STA 101+64.25	1509.68	167.7	INSIDE SHLDR
STA 101+64.25 TO STA 103+75.75	BRIDGE OMMISSION		
STA 103+75.75 TO STA 112+40.00	3410.25	378.9	INSIDE SHLDR
STA 106+00.00 TO STA 155+94.10	51320.62	5702.3	OUTSIDE SHLDR
STA 165+86.2 TO STA 173+90.00	8018.94	891.0	OUTSIDE SHLDR
STA 172+25.00 TO STA 176+14.31(BK)	1751.88	194.7	INSIDE SHLDR
STA 176+15.00(AH) TO STA185+55.00	3876.65	430.7	INSIDE SHLDR
STA 179+15.00 TO STA 188+28.20	9135.71	1015.1	OUTSIDE SHLDR
STA 194+87.70 TO STA 200+00.00(BK)	5291.49	587.9	OUTSIDE SHLDR
STA 200+00.07(AH) TO STA 226+75.00	27033.59	3003.7	OUTSIDE SHLDR
STA 225+10.00 TO STA 238+50.00	4968.09	552.0	INSIDE SHLDR
STA 232+10.00 TO STA 242+97.43(BK)	10758.49	1195.4	OUTSIDE SHLDR
STA 243+00.98(AH) TO STA 280+75.00	37740.22	4193.4	OUTSIDE SHLDR
STA 279+10.00 TO STA 292+30.00	5359.15	595.5	INSIDE SHLDR
STA 285+90.00 TO STA 300+75.00	14850.00	1650.0	OUTSIDE SHLDR
STA 299+10.00 TO STA 303+23.02	1552.30	172.5	INSIDE SHLDR
STA 303+08.16 TO STA 304+82.31	BRIDGE OMMISSION		
STA 304+97.23 TO STA 307+00.00	814.84	90.1	INSIDE SHLDR

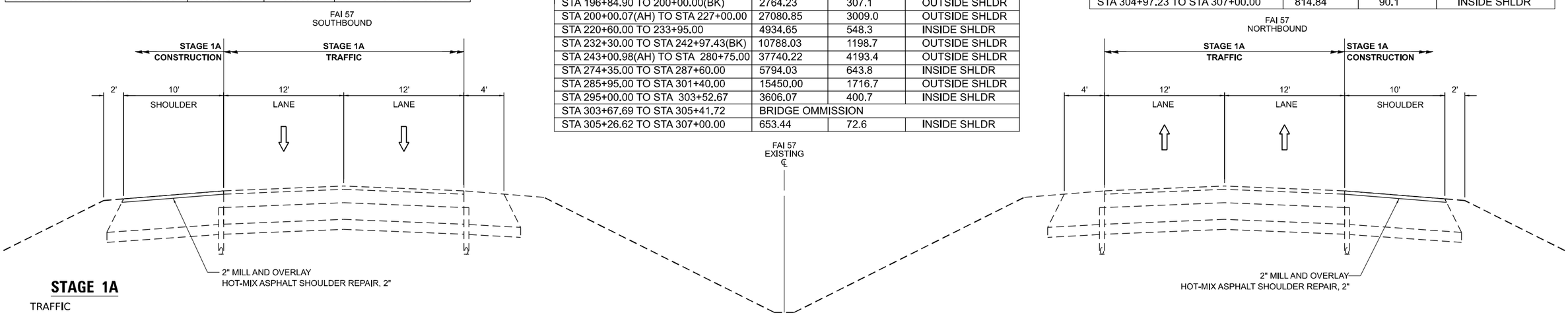

STAGE 1A

TRAFFIC

1. INSTALL SIGNING PER TRAFFIC CONTROL STANDARD, DETAIL, AS REQUIRED.
2. WORK SHALL BE DONE AT NIGHT.

ROADWAY CONSTRUCTION

1. MILL AND OVERLAY INSIDE AND OUTSIDE SHOULDER AND EDGE LINE REPAIR.
2. MILL SURFACES SHALL BE RESURFACED BEFORE OPENING THE SHOULDER.

STAGE 1A TYPICAL SECTION

STA 9+78.11 TO STA 307+00.00 (FRANKLIN COUNTY)

STA 11+21.89 TO STA 233+82.75 (JEFFERSON COUNTY)

ABNA DESIGN FIRM REG. 184.002117
745 McClintock Drive
Suite 210
Burr Ridge, IL 60527
Ph. 773-881-4788
Fax: 773-239-3728

USER NAME = muddin	DESIGNED - HH	REVISED -	
	DRAWN - IG	REVISED -	
PLOT SCALE = 0.16660000 ' / in.	CHECKED - HH	REVISED -	
PLOT DATE = 10/11/2024	DATE -	REVISED -	

STATE OF ILLINOIS
DEPARTMENT OF TRANSPORTATION

MAINTENANCE OF TRAFFIC TYPICALS
STAGE 1A

SCALE: NTS | SHEET 1 OF 9 SHEETS | STA. | TO STA.

F.A.I RTE.	SECTION	COUNTY	TOTAL SHEETS	SHEET NO.
57	(28-2)B-2; (28-1)B-2	FRANKLIN / JEFFERSON	598	245

CONTRACT NO. 78884

ILLINOIS | FED. AID PROJECT

MODEL: MOT Typical Sections - Plan 2 [Sheet]
FILE NAME: J:\2021\16084\Cadd\Design\CAD-Sheets\D978884-sht-staging-typical-genote.dgn

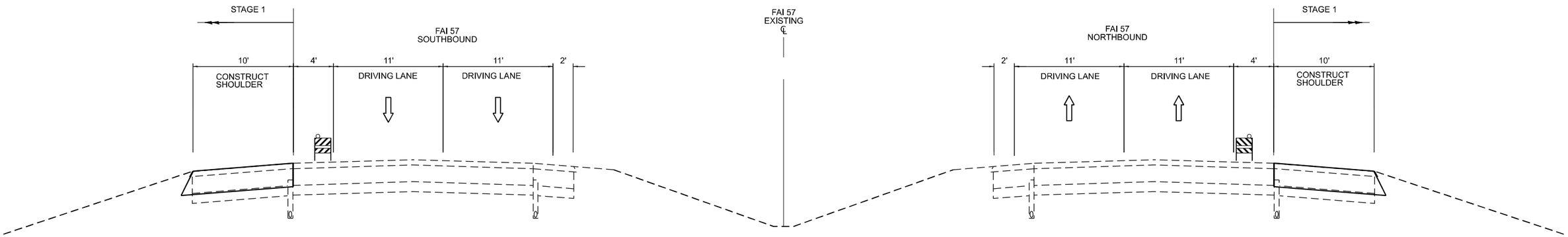

STAGE 1 PEAK HOUR

REMOVE AND REPLACE OUTSIDE SHOULDER

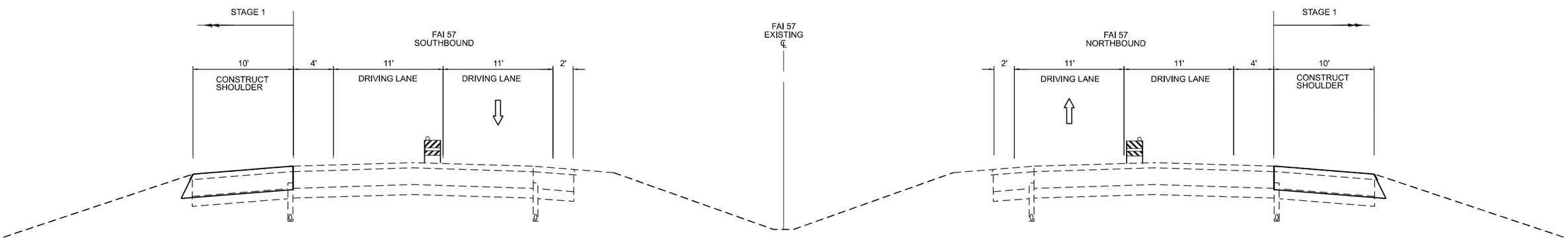

STAGE 1 OFF PEAK HOUR

REMOVE AND REPLACE OUTSIDE SHOULDER

STAGE 1 TYPICAL SECTION

STAGE 1

TRAFFIC

1. INSTALL SIGNING PER TRAFFIC CONTROL STANDARDS, DETAIL, AS REQUIRED.
2. SET UP SHOULDER CLOSURES FOR SHOULDER CONSTRUCTION.
3. SHIFT 2 LANES OF TRAFFFIC 2' ONTO THE INSIDE SHOULDER AT 1:70, 500' BEFORE AREAS OF SHOULDER REMOVAL
4. SHIFT TRAFFIC ONTO MAINLINE AT 1:70, 25' AFTER OUTSIDE SHOULDER REMOVAL AREAS

ROADWAY CONSTRUCTION

1. REMOVE EXISTING OUTSIDE SHOULDERS AT UNDERPASSES (EAST FRANKLIN ROAD SN 028-0055, IL 154 SN 028-0059,FRANKLIN CEMETERY ROAD SN 028-0056,MARCUM BRANCH ROAD SN 028-0053
2. REMOVE EXISTING OUTSIDE SHOULDERS AT BRIDGE APPROACH (OVER MARCUM BRANCH SN 028-0012, GUN CREEK SN 028-0013)
3. CONSTRUCT FULL DEPTH HMA SHOULDERS

FRANKLIN COUNTY

NORTHBOUND	SOUTHBOUND	BRIDGE # / ROAD
STA 280+75 TO STA 285+90	STA 280+75 TO STA 285+95	SN 028-0053 CH 19 (MARCUM BR) OVER FAI RTE 57
STA 226+75 TO STA 232+10	STA 227+00 TO STA 232+30	SN 028-0056 TR 75 (FRANKLIN CEM) OVER FAI RTE 57
STA 173+90 TO STA 179+15	STA 173+85 TO STA 179+15	SN 028-0059 IL 154 OVER FAI RTE 57
STA 9+78.11 TO STA 12+40	STA 9+78.11 TO STA 12+40	SN 028-0055 TR 3 (E. FRANKLIN RD) OVER FAI RTE 57
STA 99+40 TO STA 101+64.25	STA 99+40 TO 101+64.25	GUN CREEK BRIDGE
STA 103+75.75 TO STA 106+00	STA 103+75.75 TO STA 106+00	GUN CREEK BRIDGE

JEFFERSON COUNTY

NORTHBOUND	SOUTHBOUND	BRIDGE # / ROAD
STA 11+21.89 TO STA 15+70	STA 11+21.89 TO STA 15+70	SN 028-0055 TR 3 (E. FRANKLIN RD) OVER FAI RTE 57
STA 113+80 TO STA 120+20	STA 113+80 TO STA 120+20	SN 041-0113 NORTH ST. (CH 42) OVER FAI RTE 57
STA 300+75 TO STA 303+08.16	STA 301+40 TO STA 303+67.69	MARCUM BRANCH BRIDGE
STA 304+82.31 TO STA 307+19	STA 303+41.72 TO STA 307+46	MARCUM BRANCH BRIDGE

ABNA DESIGN FIRM REG. 184.002117
745 McClintock Drive
Suite 210
Burr Ridge, IL 60527
Ph. 773-881-4788
Fax: 773-239-3728

USER NAME = muddin	DESIGNED - HH	REVISED -	
	DRAWN - IG	REVISED -	
PLOT SCALE = 0.16660000 ' / in.	CHECKED - HH	REVISED -	
PLOT DATE = 10/11/2024	DATE -	REVISED -	

STATE OF ILLINOIS
DEPARTMENT OF TRANSPORTATION

MAINTENANCE OF TRAFFIC TYPICALS
STAGE 1

SCALE: NTS | SHEET 2 OF 9 SHEETS | STA. TO STA.

F.A.I RTE.	SECTION	COUNTY	TOTAL SHEETS	SHEET NO.
57	(28-2)B-2; (28-1)B-2	FRANKLIN / JEFFERSON	598	246

CONTRACT NO. 78884

ILLINOIS | FED. AID PROJECT

MODEL: MOT Typical Sections - Plan 2-1 [Sheet]
FILE NAME: J:\2021\6084\Cadd\Design\CAD_Sheets\D978884-sht-staging-typical-genote.dgn

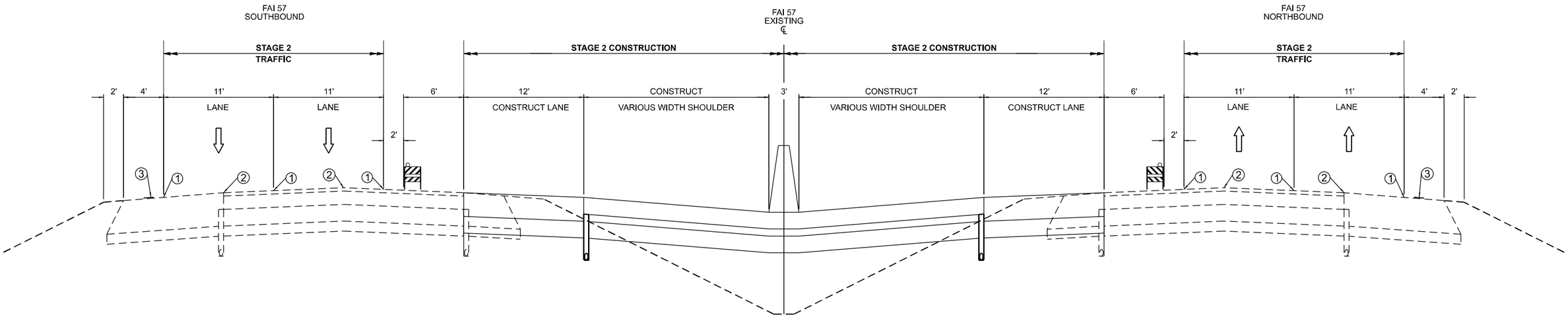

STAGE 2 PEAK HOUR

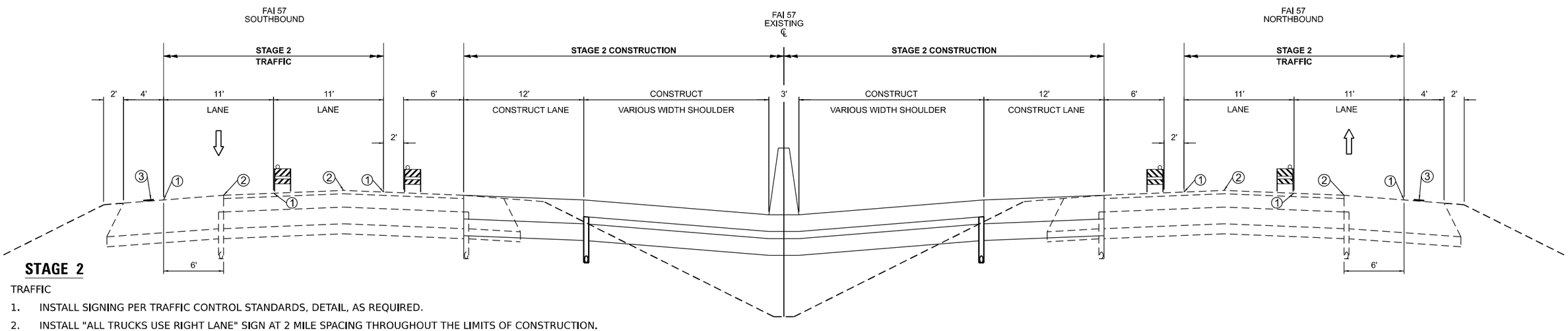

STAGE 2 OFF PEAK HOUR

STAGE 2

TRAFFIC

1. INSTALL SIGNING PER TRAFFIC CONTROL STANDARDS, DETAIL, AS REQUIRED.
2. INSTALL "ALL TRUCKS USE RIGHT LANE" SIGN AT 2 MILE SPACING THROUGHOUT THE LIMITS OF CONSTRUCTION.
3. SHIFT 2 LANES OF TRAFFFIC TOWARD THE OUTSIDE SHOULDER AT A RATE 1:55, 1000'.
4. MAINTAIN TRAFFIC ON THE EXISTING LANES AND OUTSIDE SHOULDER TO CONSTRUCT LEFT LANE AND INSIDE SHOULDER.
5. INSTALL TEMPORARY CONCRETE BARRIER FOR BRIDGE CONSTRUCTION.
6. KEEP TRAFFIC OPEN TO 2 LANES DURING PEAK HOUR.

ROADWAY CONSTRUCTION

1. INSTALL DRAINAGE STRUCTURES AND PIPES.
2. CONSTRUCT THE NEW INSIDE LANE AND INSIDE SHOULDER.
3. CONSTRUCT INSIDE LANE AND INSIDE SHOULDER FOR NEW SN 028-0090/SN 028-0091.
4. CONSTRUCT CONCRETE BARRIER.
5. CONSTRUCT APPROACH PAVEMENT AND PCC CONNECTOR.

STAGE 2 TYPICAL SECTION

STA 9+78.11 TO STA 307+00.00 (FRANKLIN COUNTY)

STA 11+21.89 TO STA 233+82.75 (JEFFERSON COUNTY)

① TEMPORARY PAVEMENT MARKING - LINE 6"

② REMOVE EXISTING STRIPE

③ 8" RUMBLE STRIP OUTSIDE SHOULDER
HIGH SIDE OF SUPERELEVATION SEE NOTE 1

NOTE 1:

8" RUMBLE STRIP OUTSIDE SHOULDER ON THE HIGH SIDE OF THE SUPERELEVATION.

JEFFERSON COUNTY
SOUTHBOUND STA 116+95.40 TO STA 126+00.00
SOUTHBOUND STA 132+00.00 TO STA 145+69.82
NORTHBOUND STA 116+95.40 TO STA 145+69.82

FRANKLIN COUNTY
SOUTHBOUND STA 218+64.94 TO STA 243+67.65
NORTHBOUND STA 218+64.94 TO STA 243+67.65

MODEL: MOT Typical Sections - Plan 3 [Sheet]
FILE NAME: J:\2021\6084\Cadd\Design\CAD Sheets\D978884-sht-staging-typical-genote.dgn

ABNA DESIGN FIRM REG. 184.002117
745 McClintock Drive
Suite 210
Burr Ridge, IL 60527
Ph. 773-961-4788
Fax: 773-239-3728

USER NAME = muddin	DESIGNED - HH	REVISED -	
	DRAWN - IG	REVISED -	
PLOT SCALE = 0.16660000 ' / in.	CHECKED - HH	REVISED -	
PLOT DATE = 10/11/2024	DATE -	REVISED -	

STATE OF ILLINOIS
DEPARTMENT OF TRANSPORTATION

MAINTENANCE OF TRAFFIC TYPICALS
STAGE 2

SCALE: NTS | SHEET 3 OF 9 SHEETS | STA. TO STA.

F.A.I RTE.	SECTION	COUNTY	TOTAL SHEETS	SHEET NO.
57	(28-2)B-2; (28-1)B-2	FRANKLIN / JEFFERSON	598	247

CONTRACT NO. 78884

ILLINOIS | FED. AID PROJECT

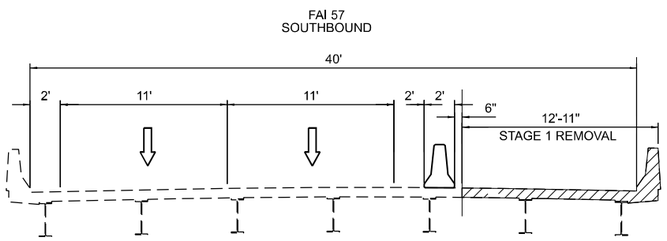

SN 028-0011

STAGE 1 BRIDGE REMOVAL

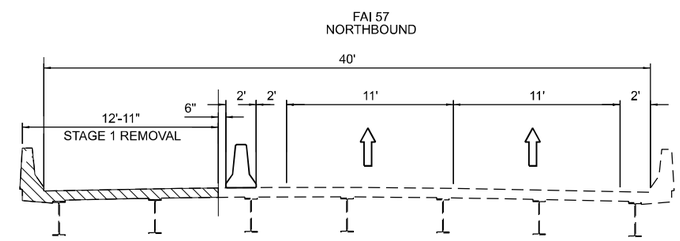

SN 028-0012

STAGE 1 BRIDGE REMOVAL

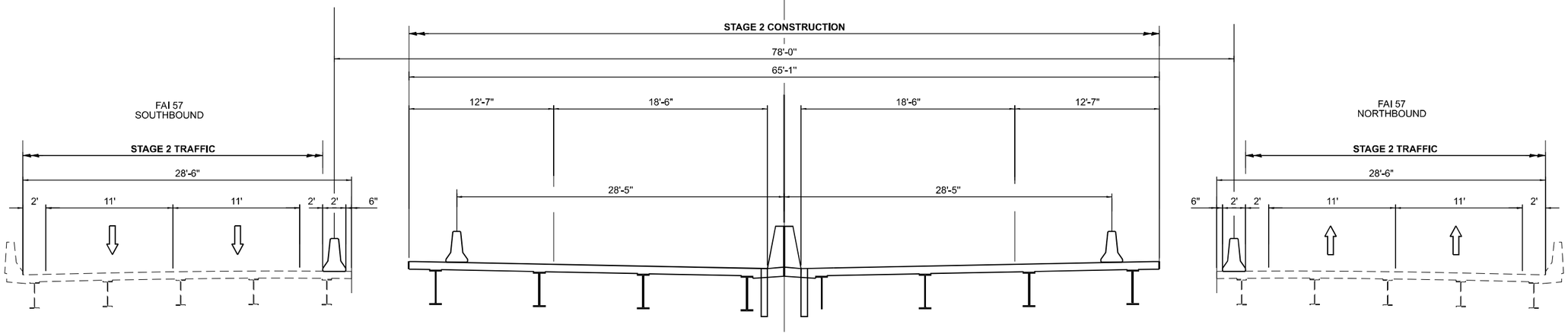

STAGE 2 BRIDGE CONSTRUCTION

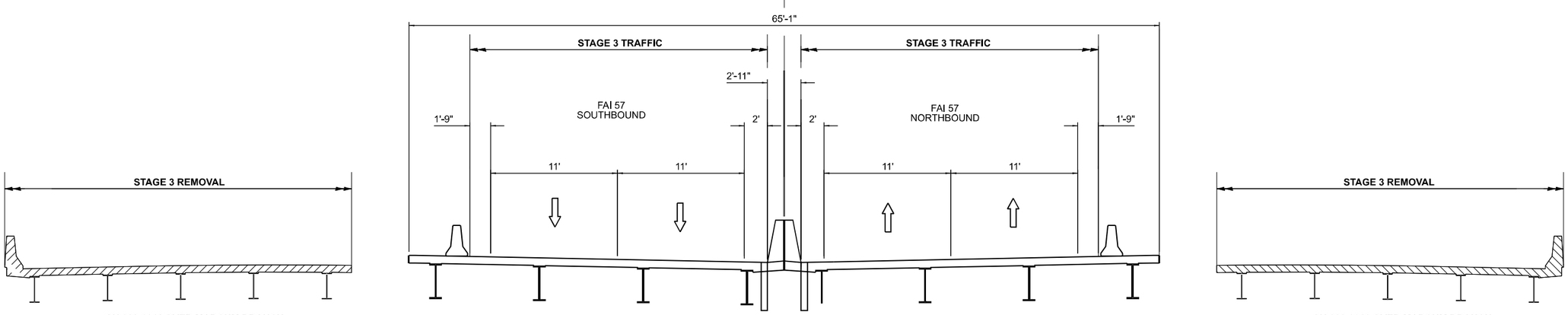

SN 028-0011 OVER MARCUM BRANCH
SN 028-0013 OVER GUN CREEK

SN 028-0012 OVER MARCUM BRANCH
SN 028-0014 OVER GUN CREEK

STAGE 3 BRIDGE REMOVAL

STAGE 2

BRIDGE CONSTRUCTION

1. INSTALL DRAINAGE STRUCTURE AND PIPES.
2. CONSTRUCT THE NEW INSIDE LANE AND INSIDE SHOULDER.
3. CONSTRUCT INSIDE LANE AND INSIDE SHOULDER FOR NEW SN 028-0090/SN 028-0091.
4. CONSTRUCT CONCRETE BARRIER
5. CONSTRUCT APPROACH PAVEMENT AND PCC CONNECTOR

MODEL: MOT Typical Sections - Plan 4 [Sheet]
FILE NAME: J:\2021\6084\Cads\Design\CAD_Sheets\D978884-sht-staging-typical-genote.dgn

ABNA DESIGN FIRM REG. 184.002117
745 McClintock Drive
Suite 210
Burr Ridge, IL 60527
Ph. 773-481-4788
Fax: 773-239-3728

USER NAME = muddin	DESIGNED - HH	REVISED -	
	DRAWN - IG	REVISED -	
PLOT SCALE = 0.16660000 ' / in.	CHECKED - HH	REVISED -	
PLOT DATE = 10/11/2024	DATE -	REVISED -	

STATE OF ILLINOIS
DEPARTMENT OF TRANSPORTATION

MAINTENANCE OF TRAFFIC TYPICALS
BRIDGE

SCALE: NTS | SHEET 4 OF 9 SHEETS | STA. | TO STA.

F.A.I RTE.	SECTION	COUNTY	TOTAL SHEETS	SHEET NO.
57	(28-2)B-2; (28-1)B-2	FRANKLIN	598	248
		CONTRACT NO. 78884		
	ILLINOIS	FED. AID PROJECT		

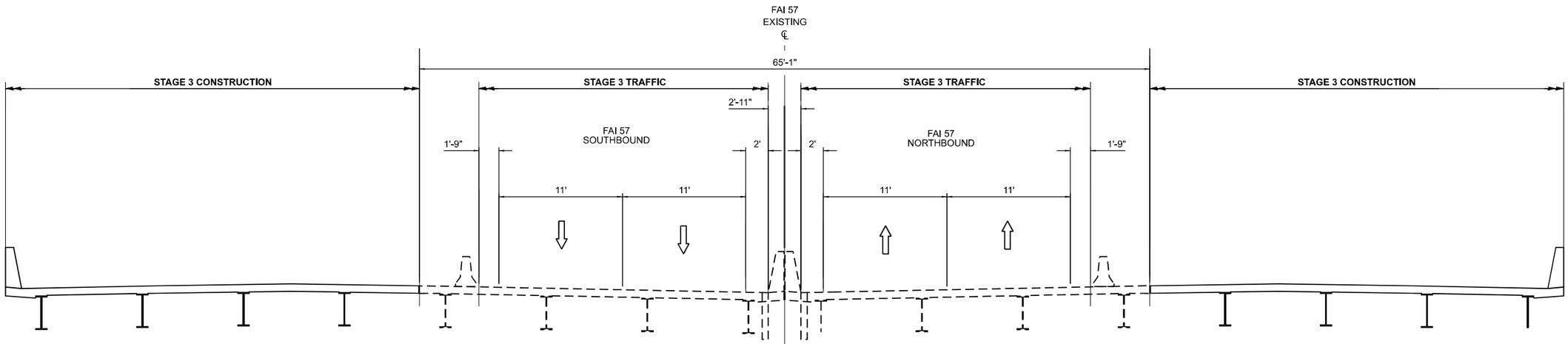

STAGE 3 BRIDGE CONSTRUCTION

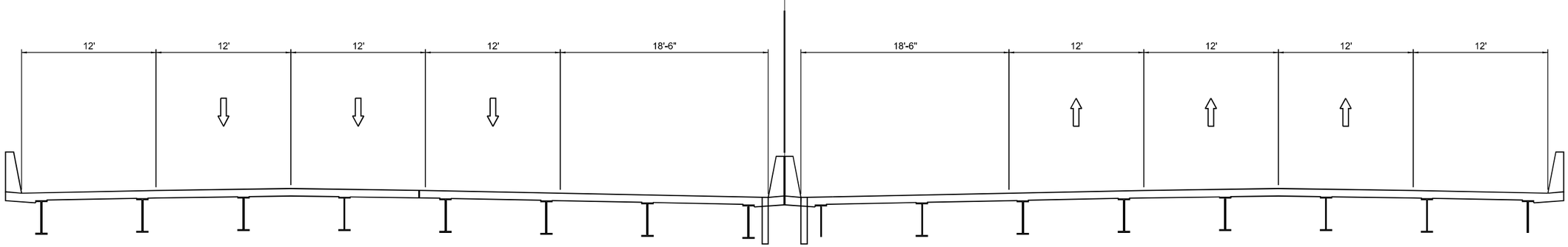

NEW BRIDGE SN 028-0090
NEW BRIDGE SN 028-0091

PROPOSED TYPICAL SECTION

STAGE 3

TRAFFIC

1. INSTALL SIGNING PER TRAFFIC CONTROL STANDARDS, DETAIL, AS REQUIRED.
2. SHIFT 2 LANES OF TRAFFIC TOWARD THE INSIDE SHOULDER AT A RATE OF 1:55 TAPER.
3. MAINTAIN TRAFFIC ON THE INSIDE LANE AND INSIDE SHOULDER TO CONSTRUCT OUTSIDE OF SN 028-0090/SN 028-0091.
4. INSTALL TEMPORARY CONCRETE BARRIER FOR BRIDGE CONSTRUCTION.
5. KEEP TRAFFIC OPEN TO 2 LANES.

ROADWAY CONSTRUCTION

1. CONSTRUCT OUTSIDE PORTION OF SN 028-0090/SN 028-0091.
2. CONSTRUCT APPROACH PAVEMENT AND PCC CONNECTOR.

ROADWAY CONSTRUCTION

1. MILL AND OVERLAY INSIDE AND OUTSIDE SHOULDER AND EDGE LINE REPAIR.
2. MILL SURFACES SHALL BE RESURFACED BEFORE OPENING THE SHOULDER.

MODEL: MOT Typical Sections - Plan 5 [Sheet]
FILE NAME: J:\2021\6084\Cadd\Design\CAD_Sheets\D978884-sht-staging-typical-genote.dgn

ABNA DESIGN FIRM REG. 184.002117
745 McClintock Drive
Suite 210
Burr Ridge, IL 60527
Ph. 773-681-4788
Fax: 773-239-3728

USER NAME = muddin	DESIGNED - HH	REVISED -	
	DRAWN - IG	REVISED -	
PLOT SCALE = 0.16660000 ' / in.	CHECKED - HH	REVISED -	
PLOT DATE = 10/11/2024	DATE -	REVISED -	

STATE OF ILLINOIS
DEPARTMENT OF TRANSPORTATION

MAINTENANCE OF TRAFFIC TYPICALS
STAGE 3

SCALE: NTS | SHEET 5 OF 9 SHEETS | STA. TO STA.

F.A. I RTE.	SECTION	COUNTY	TOTAL SHEETS	SHEET NO.
57	(28-2)B-2; (28-1)B-2	FRANKLIN	598	249
		CONTRACT NO. 78884		
	ILLINOIS	FED. AID PROJECT		

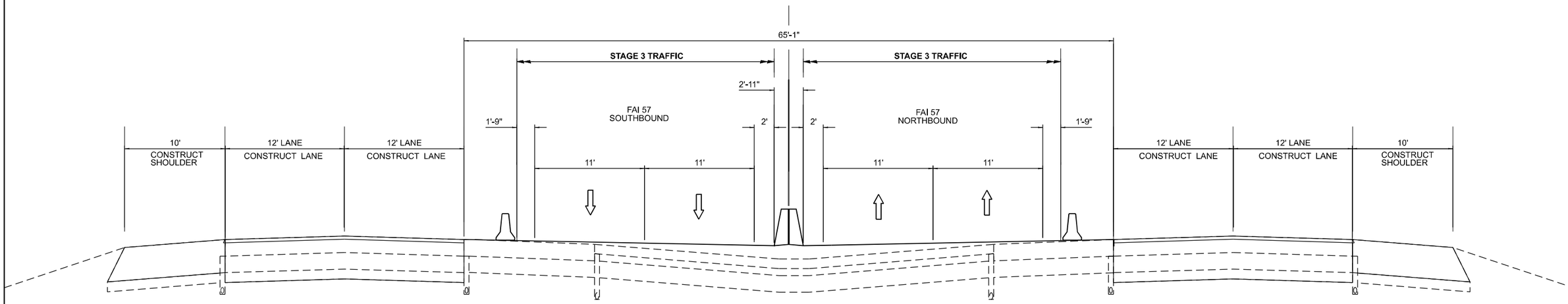

STAGE 3 TYPICAL SECTION

FULL DEPTH LANE CONSTRUCTION

	FRANKLIN COUNTY	
NORTHBOUND	SOUTHBOUND	BRIDGE # / ROAD
STA 99+40 TO STA 101+64.25	STA 99+40 TO 101+64.25	GUN CREEK BRIDGE
STA 103+75.75 TO STA 106+00	STA 103+75.75 TO STA 106+00	GUN CREEK BRIDGE

	JEFFERSON COUNTY	
NORTHBOUND	SOUTHBOUND	BRIDGE # / ROAD
STA 300+75 TO STA 303+08.16	STA 301+40 TO STA 303+67.69	MARCUM BRANCH BRIDGE
STA 304+82.31 TO STA 307+19	STA 305+41.72 TO STA 307+46	MARCUM BRANCH BRIDGE

STAGE 3

TRAFFIC

1. INSTALL SIGNING PER TRAFFIC CONTROL STANDARDS, DETAIL, AS REQUIRED.
2. SET UP LANE CLOSURES FOR FULL DEPTH PAVEMENT CONSTRUCTION AT APPROACH TO BRIDGE
3. KEEP 2 LANES OF TRAFFIC OPEN DURING PEAK HOURS.
4. SHIFT TRAFFIC TO THE INSIDE.

ROADWAY CONSTRUCTION

1. CONSTRUCT FULL DEPTH PAVEMENT IN THE MIDDLE AND OUTSIDE LANE.

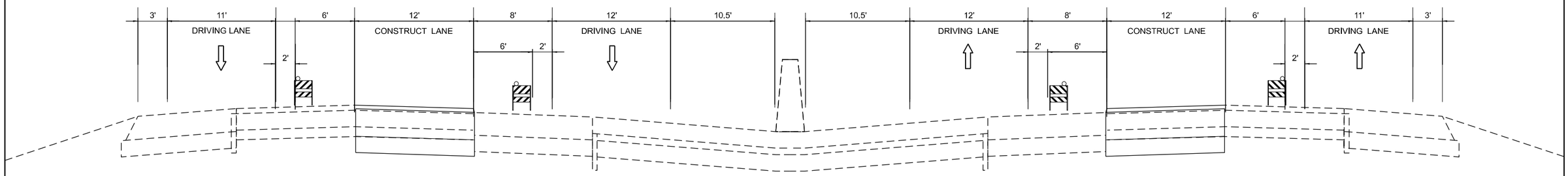

STAGE 4 PEAK HOUR

REMOVE AND REPLACE MIDDLE LANE

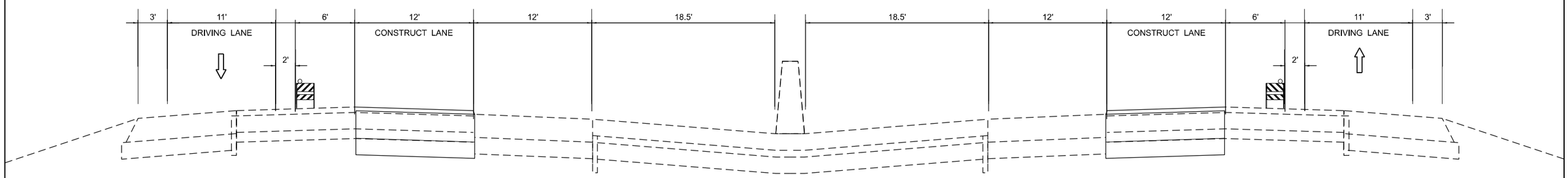

STAGE 4 OFF PEAK HOUR

REMOVE AND REPLACE MIDDLE LANE

STAGE 4

TRAFFIC

1. INSTALL SIGNING PER TRAFFIC CONTROL STANDARDS, DETAIL, AS REQUIRED.
2. SET UP LANE CLOSURES FOR FULL DEPTH PAVEMENT CONSTRUCTION AT UNDERPASSES AND APPROACH TO BRIDGE
3. KEEP 2 LANES OF TRAFFIC OPEN DURING PEAK HOURS.
4. SHIFT 1 LANE OF TRAFFIC TO THE OUTSIDE AND 1 LANE OF TRAFFIC TO THE INSIDE.

ROADWAY CONSTRUCTION

1. CONSTRUCT FULL DEPTH PAVEMENT IN THE MIDDLE LANE.
2. ALL WORK TO BE DONE DURING OFF PEAK HOURS.

STAGE 4 TYPICAL SECTION

FRANKLIN COUNTY		
NORTHBOUND	SOUTHBOUND	BRIDGE # / ROAD
STA 09+78.11 TO STA 12+40	STA 09+78.11 TO STA 12+40	SN 028-0055 TR 3 (E. FRANKLIN RD) OVER FAI RTE 57
STA 173+85 TO STA 179+15	STA 173+85 TO STA 179+15	SN 028-0059 IL 154 OVER FAI RTE 57
STA 226+75 TO STA 232+30	STA 226+75 TO STA 232+30	SN 028-0056 TR 75 (FRANKLIN CEM) OVER FAI RTE 57
STA 280+75 TO STA 285+95	STA 280+75 TO STA 285+95	SN 028-0053 CH 19 (MARCUM BR) OVER FAI RTE 57

JEFFERSON COUNTY		
NORTHBOUND	SOUTHBOUND	BRIDGE # / ROAD
STA 11+21.89 TO STA 15+70	STA 11+21.89 TO STA 15+70	SN 028-0055 TR 3 (E. FRANKLIN RD) OVER FAI RTE 57
STA 113+80 TO STA 120+20	STA 113+80 TO STA 120+20	INA INTERCHANGE, NORTH ST(CH 42) SN 041-0113

MODEL: MOT Typical Sections - Plan 6 [Sheet]
FILE NAME: J:\2021\6084\Cadd\Design\CAD_Sheets\D978884-sht-staging-typical-generic.dgn

ABNA DESIGN FIRM REG. 184.002117
745 McClintock Drive
Suite 210
Burr Ridge, IL 60527
Ph. 773-681-4788
Fax: 773-299-3728

USER NAME = muddin	DESIGNED - HH	REVISED -	
	DRAWN - IG	REVISED -	
PLOT SCALE = 0.16666000 ' / in.	CHECKED - HH	REVISED -	
PLOT DATE = 10/11/2024	DATE -	REVISED -	

STATE OF ILLINOIS
DEPARTMENT OF TRANSPORTATION

MAINTENANCE OF TRAFFIC TYPICALS
STAGE 4

SCALE: NTS | SHEET 7 OF 9 SHEETS | STA. | TO STA.

F.A.I RTE.	SECTION	COUNTY	TOTAL SHEETS	SHEET NO.
57	(28-2)B-2; (28-1)B-2	FRANKLIN / JEFFERSON	598	251

CONTRACT NO. 78884

ILLINOIS | FED. AID PROJECT

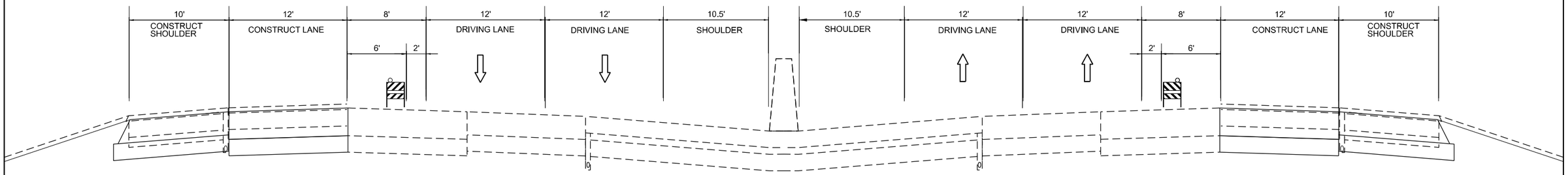

STAGE 5 TYPICAL SECTION

REMOVE AND REPLACE OUTSIDE LANE AND OUTSIDE SHOULDER
REMOVE AND REPLACE GUARDRAIL ACCORDING TO SCHEDULE

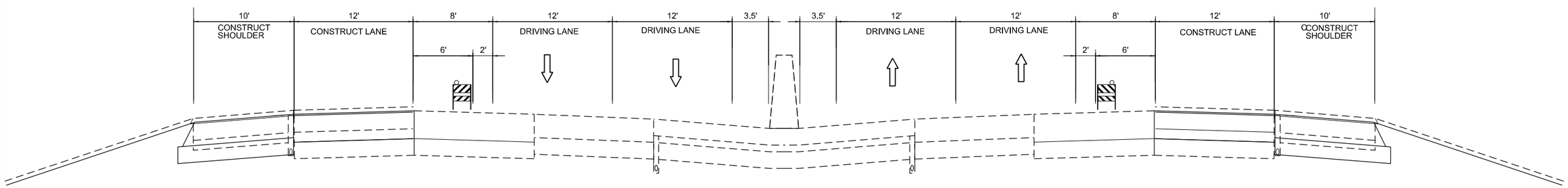

FRANKLIN COUNTY		
NORTHBOUND	SOUTHBOUND	BRIDGE # / ROAD
STA 09+78.11 TO STA 12+40	STA 09+78.11 TO STA 12+40	SN 028-0055 TR 3 (E. FRANKLIN RD) OVER FAI RTE 57
STA 173+85 TO STA 179+15	STA 173+85 TO STA 179+15	SN 028-0059 IL 154 OVER FAI RTE 57
STA 226+75 TO STA 232+30	STA 226+75 TO STA 232+30	SN 028-0056 TR 75 (FRANKLIN CEM) OVER FAI RTE 57
STA 280+75 TO STA 285+95	STA 280+75 TO STA 285+95	SN 028-0053 CH 19 (MARCUM BR) OVER FAI RTE 57

JEFFERSON COUNTY		
NORTHBOUND	SOUTHBOUND	BRIDGE # / ROAD
STA 11+21.89 TO STA 15+70	STA 11+21.89 TO STA 15+70	SN 028-0055 TR 3 (E. FRANKLIN RD) OVER FAI RTE 57
STA 113+80 TO STA 120+20	STA 113+80 TO STA 120+20	INA INTERCHANGE, NORTH ST (CH 42) SN 041-0113

STAGE 5 TYPICAL SECTION

REMOVE AND REPLACE OUTSIDE LANE AND OUTSIDE SHOULDER
REMOVE AND REPLACE GUARDRAIL ACCORDING TO SCHEDULE

STAGE 5

TRAFFIC

1. INSTALL SIGNING PER TRAFFIC CONTROL STANDARDS, DETAIL, AS REQUIRED.
2. SET UP LANE CLOSURES FOR FULL DEPTH PAVEMENT CONSTRUCTION AT UNDERPASSES.
3. KEEP 2 LANES OF TRAFFIC OPEN.
4. SHIFT TRAFFIC TO THE INSIDE.

ROADWAY CONSTRUCTION

1. CONSTRUCT FULL DEPTH PAVEMENT IN THE OUTSIDE LANE.
2. REMOVE AND REPLACE OUTSIDE SHOULDER TO MATCH PROPOSED GRADE OF ROADWAY.
3. INSTALL GUARDRAIL ALONG OUTSIDE SHOULDERS.

ABNA DESIGN FIRM REG. 184.002117
745 McClintock Drive Suite 210 Burr Ridge, IL 60527 Ph. 773-481-4788 Fax: 773-239-3728

USER NAME = muddin	DESIGNED - HH	REVISED -	
	DRAWN - IG	REVISED -	
PLOT SCALE = 0.16666000 ' / in.	CHECKED - HH	REVISED -	
PLOT DATE = 10/11/2024	DATE -	REVISED -	

STATE OF ILLINOIS
DEPARTMENT OF TRANSPORTATION

MAINTENANCE OF TRAFFIC TYPICALS
STAGE 5

SCALE: NTS | SHEET 8 OF 9 SHEETS | STA. TO STA.

F.A.I RTE.	SECTION	COUNTY	TOTAL SHEETS	SHEET NO.
57	(28-2)B-2; (28-1)B-2	FRANKLIN / JEFFERSON	598	252

CONTRACT NO. 78884

ILLINOIS | FED. AID PROJECT

MODEL: MOT Typical Sections - Plan 7 [Sheet]
FILE NAME: J:\2021\6084\CaddDesign\CAD_Sheets\D978884-sht-staging-typical-genote.dgn

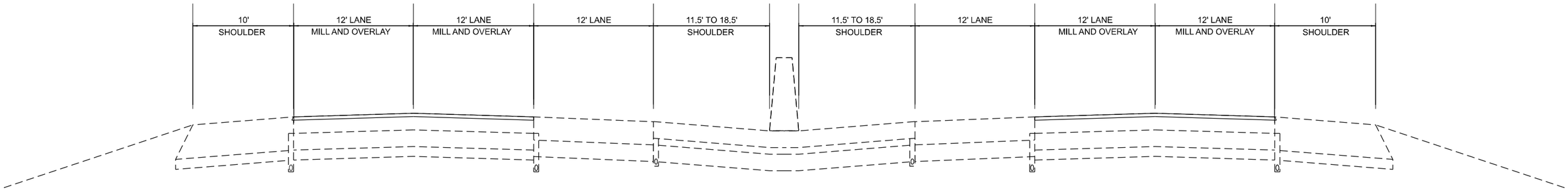

STAGE 6 TYPICAL SECTION

MILL AND OVERLAY TWO EXISTING LANES

FRANKLIN COUNTY	
NORTHBOUND	SOUTHBOUND
STA 12+40.00 TO 50+00.00 BK	STA 12+40.00 TO 50+00.00 BK
STA 49+99.31 AH TO STA 99+40.00	STA 49+99.31 AH TO STA 99+40.00
STA 101+64.25 TO STA 103+78.75 BRIDGE OMMISSION	STA 101+64.25 TO STA 103+78.75 BRIDGE OMMISSION
STA 106+00.00 TO STA 173+85.00	STA 106+00.00 TO STA 173+85.00
STA 179+15.00 TO STA 200+00.00 BK	STA 179+15.00 TO STA 200+00.00 BK
STA 200+00.70 AH TO STA 226+75.00	STA 200+00.70 AH TO STA 226+75.00
STA 232+30.00 TO STA 242+97.43 BK	STA 232+30.00 TO STA 242+97.43 BK
STA 243+00.98 AH TO STA 281+40.00	STA 243+00.98 AH TO STA 281+40.00
STA 285+95.00 TO STA 300+75.00	STA 285+95.00 TO STA 301+40.00
STA 303+34.53 TO STA 305+15.47 BRIDGE OMISSION	STA 303+34.53 TO STA 305+15.47 BRIDGE OMMISSION
RAMPS	
RAMP A - SOUTHBOUND REST AREA	
RAMP B - SOUTHBOUND REST AREA	
RAMP A - IL 154 INTERCHANGE	
RAMP B - IL 154 INTERCHANGE	
RAMP C - IL 154 INTERCHANGE	
RAMP D - IL 154 INTERCHANGE	

JEFFERSON COUNTY	
STA 15+70.00 TO STA 62+64.51 BK	STA 15+70.00 TO STA 62+64.51 BK
STA 62+65.57 AH TO STA 113+80.00	STA 62+65.57 AH TO STA 113+80.00
STA 120+20.00 TO 226+02.00	STA 120+20.00 TO 226+02.00
RAMPS	
RAMP A - NORTH AVENUE INTERCHANGE	
RAMP B - NORTH AVENUE INTERCHANGE	
RAMP C - NORTH AVENUE INTERCHANGE	
RAMP D - NORTH AVENUE INTERCHANGE	

STAGE 6

TRAFFIC

1. INSTALL SIGNING PER TRAFFIC CONTROL STANDARDS, DETAIL, AS REQUIRED.

ROADWAY CONSTRUCTION

1. MILL AND OVERLAY TWO EXISTING LANES.
2. INSTALL STRIPING
3. MILL SURFACES SHALL BE RESURFACED BEFORE OPENING THE LANE FOR PEAK HOUR TRAFFIC.

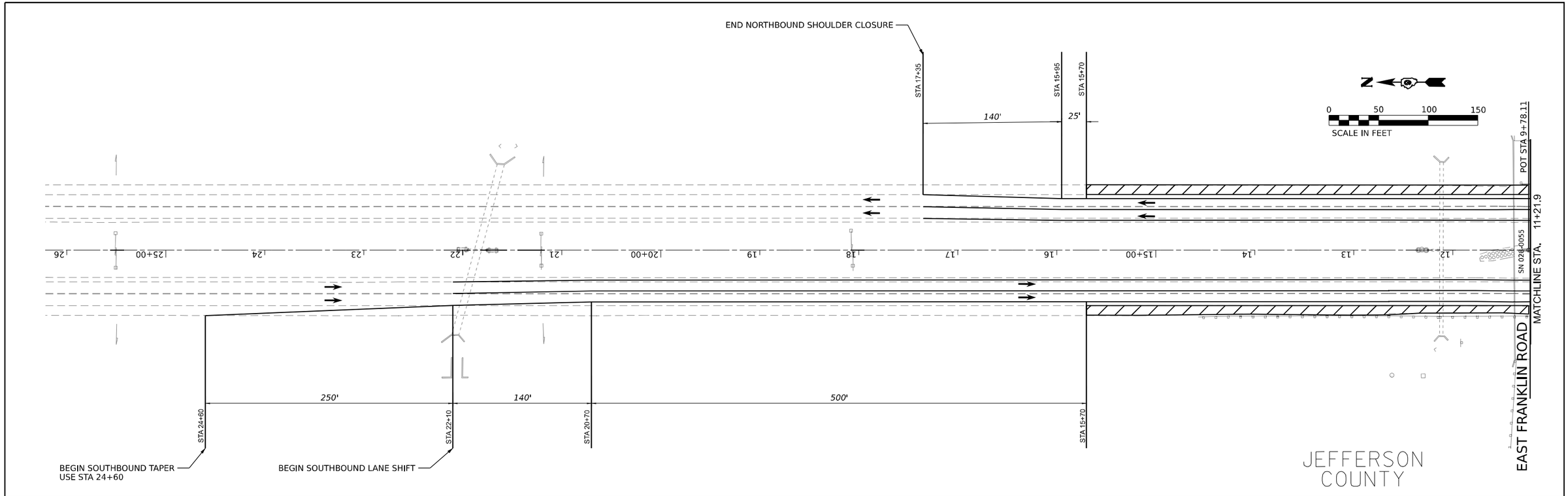

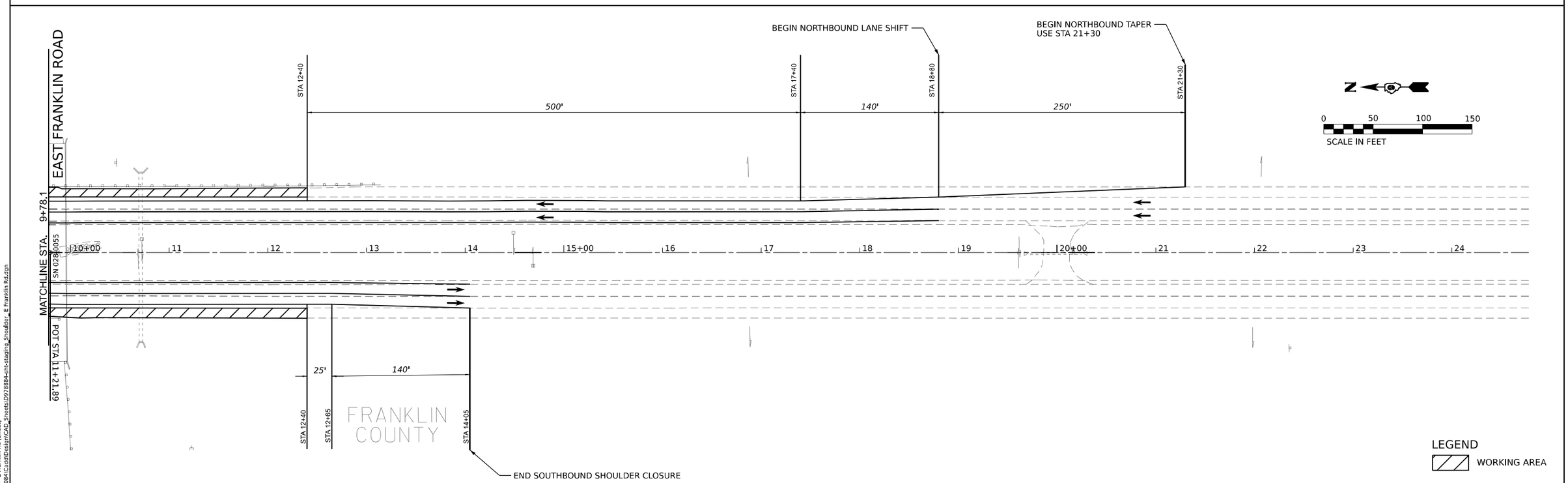

MODEL: E Franklin Rd - E Franklin Rd [Sheet]
FILE NAME: J:\20211\6084\Cadd\Design\CAD_Sheets\D978884-cht-staging_Shoulder_E Franklin Rd.dgn

ABNA DESIGN FIRM REG. 184.002117
745 McClintock Drive
Suite 210
Burr Ridge, IL 60527
Ph. 773-481-4788
Fax: 773-239-3728

USER NAME = muddin	DESIGNED - HH	REVISED -	
	DRAWN - IG	REVISED -	
PLOT SCALE = 0.166666 ' / in.	CHECKED - HH	REVISED -	
PLOT DATE = 10/11/2024	DATE -	REVISED -	

STATE OF ILLINOIS
DEPARTMENT OF TRANSPORTATION

MAINTENANCE OF TRAFFIC
STAGE 1 E FRANKLIN ROAD

SCALE: 1:50 | SHEET 1 OF 7 SHEETS | STA. | TO STA.

F.A.I. RTE.	SECTION	COUNTY	TOTAL SHEETS	SHEET NO.
57	(28-2)B-2; (28-1)B-2	VARIOUS	598	254
		CONTRACT NO.		
	ILLINOIS	FED. AID PROJECT		

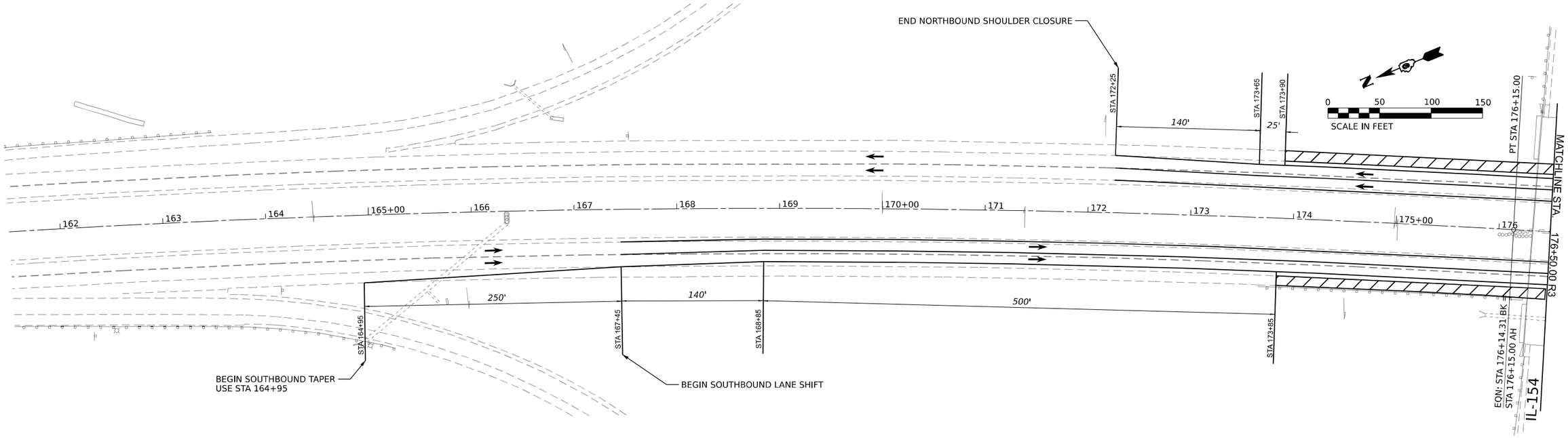

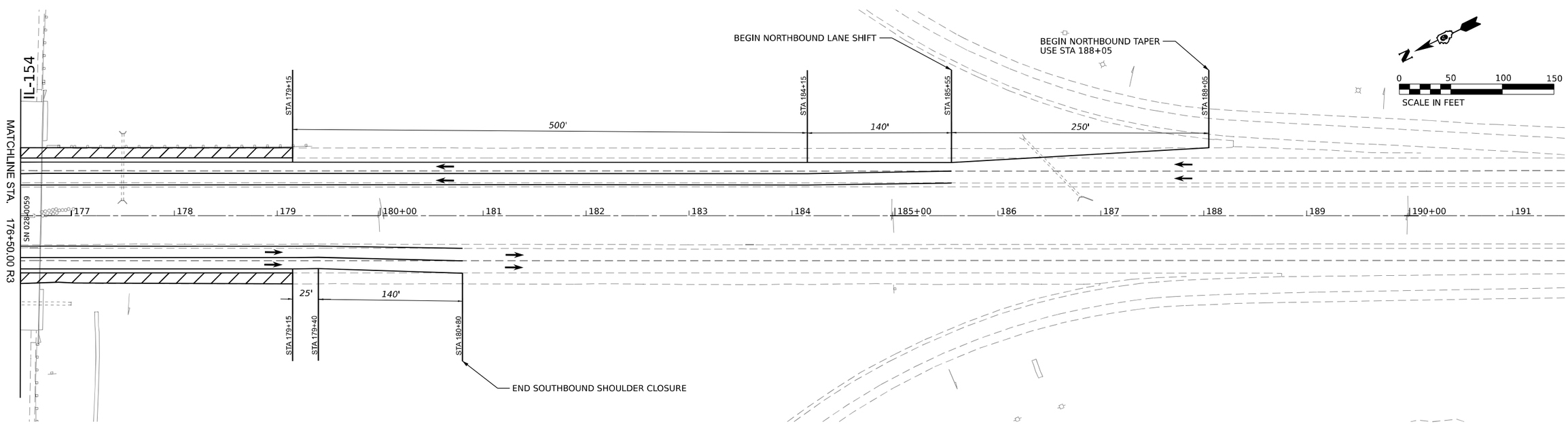

LEGEND

WORKING AREA

MODEL: IL 154 Overpass - IL 154 Overpass [Sheet]
FILE NAME: J:\2021\6084\CiddiDesign\CAD_Sheets\D978884-cltc-staging_Shoulder_IL 154 Overpass.dgn

ABNA DESIGN FIRM REG. 184.002117
745 McClintock Drive
Suite 210
Burr Ridge, IL 60527
Ph. 773-881-4788
Fax: 773-239-3728

USER NAME = muddin	DESIGNED - HH	REVISED -	
	DRAWN - IG	REVISED -	
PLOT SCALE = 0.16666633 ' / in.	CHECKED - HH	REVISED -	
PLOT DATE = 10/11/2024	DATE -	REVISED -	

STATE OF ILLINOIS
DEPARTMENT OF TRANSPORTATION

MAINTENANCE OF TRAFFIC
STAGE 1 IL 154 OVERPASS

SCALE: 1:50 | SHEET 2 OF 7 SHEETS | STA. TO STA.

F.A.I. RTE.	SECTION	COUNTY	TOTAL SHEETS	SHEET NO.
57	(28-2)B-2; (28-1)B-2	FRANKLIN	598	255
		CONTRACT NO.		
	ILLINOIS	FED. AID PROJECT		

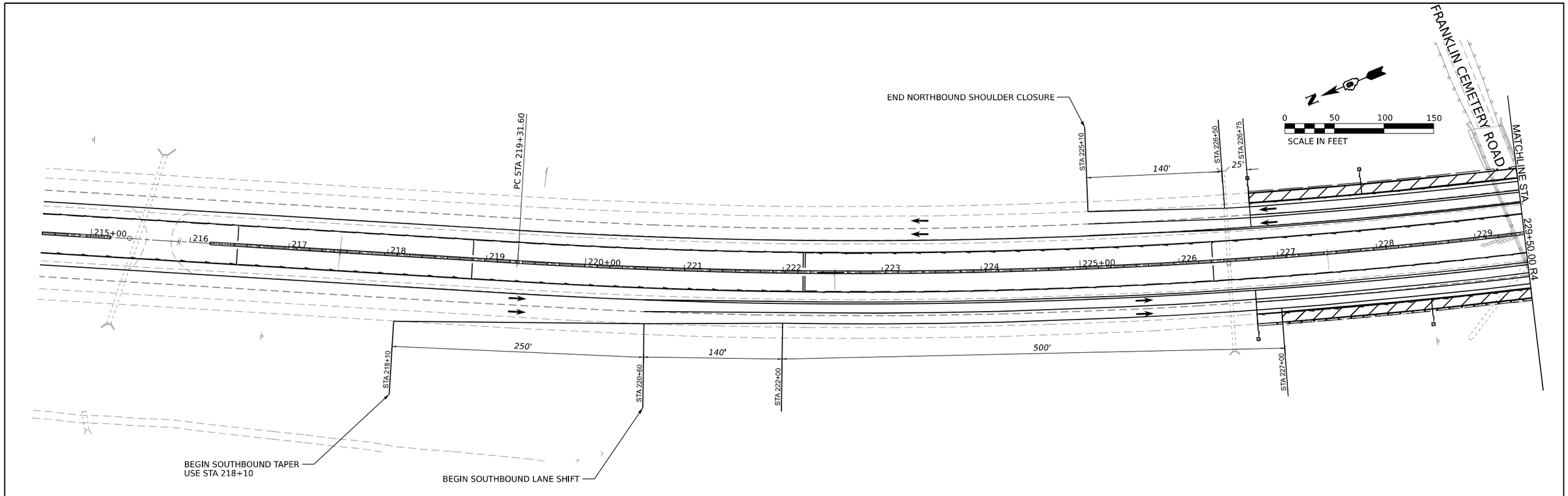

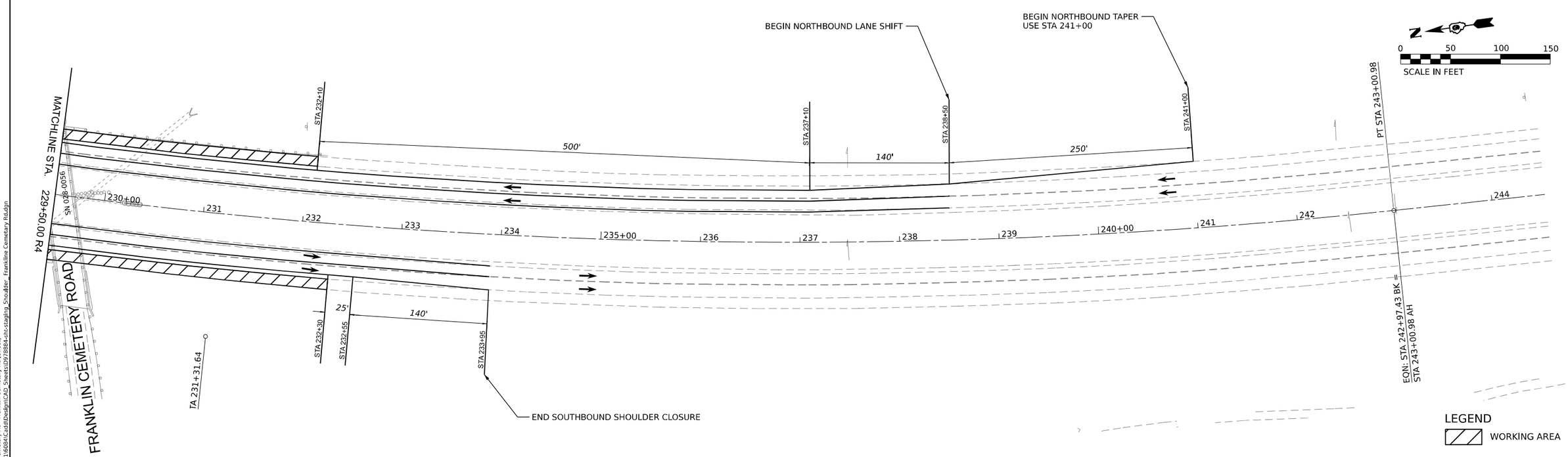

MODEL: Franklin Cemetary Rd - Franklin Cemetary Rd [Sheet]
FILE NAME: J:\2021\6084\CaddDesign\CAD Sheets\D978884-tfc-staging_Shoulder_Franklin Cemetary Rd.dgn

ABNA DESIGN FIRM REG. 184.002117
745 McClintock Drive
Suite 210
Burr Ridge, IL 60527
Ph. 773-881-4788
Fax: 773-239-3728

USER NAME = muddin	DESIGNED - HH	REVISED -	
	DRAWN - IG	REVISED -	
PLOT SCALE = 0.16666633 ' / in.	CHECKED - HH	REVISED -	
PLOT DATE = 10/11/2024	DATE -	REVISED -	

STATE OF ILLINOIS
DEPARTMENT OF TRANSPORTATION

MAINTENANCE OF TRAFFIC
STAGE 1 FRANKLIN CEMETERY ROAD

SCALE: 1:50 | SHEET 3 OF 7 SHEETS | STA. TO STA.

F.A.I. RTE.	SECTION	COUNTY	TOTAL SHEETS	SHEET NO.
57	(28-2)B-2; (28-1)B-2	FRANKLIN	598	256
		CONTRACT NO.		
	ILLINOIS	FED. AID PROJECT		

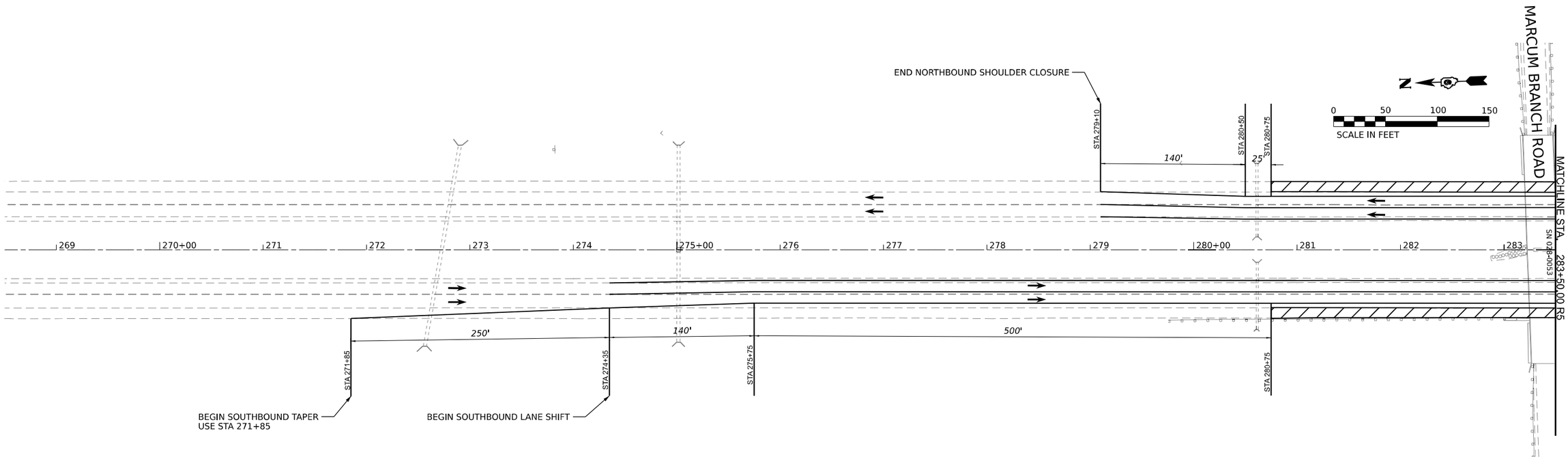

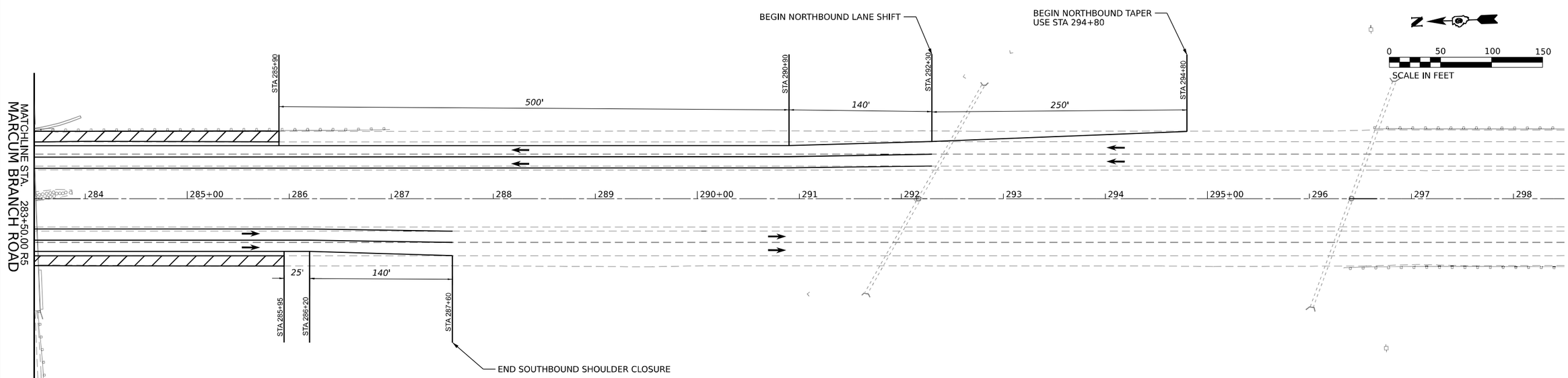

LEGEND

WORKING AREA

MODEL: Marcum Branch Rd - Marcum Branch Rd [Sheet]
FILE NAME: J:\2021\6084\Cadd\Design\CAD_Sheets\D978884-tfc-staging_Shoulder_Marcum Branch Rd.dgn

ABNA DESIGN FIRM REG. 184.002117
745 McClintock Drive
Suite 210
Burr Ridge, IL 60527
Ph. 773-881-4788
Fax: 773-239-3728

USER NAME = muddin	DESIGNED - HH	REVISED -	
	DRAWN - IG	REVISED -	
PLOT SCALE = 0.16666633 ' / in.	CHECKED - HH	REVISED -	
PLOT DATE = 10/11/2024	DATE -	REVISED -	

STATE OF ILLINOIS
DEPARTMENT OF TRANSPORTATION

MAINTENANCE OF TRAFFIC
STAGE 1 MARCUM BRANCH ROAD

SCALE: 1:50 | SHEET 4 OF 7 SHEETS | STA. TO STA.

F.A.I. RTE.	SECTION	COUNTY	TOTAL SHEETS	SHEET NO.
57	(28-2)B-2; (28-1)B-2	FRANKLIN	598	257
		CONTRACT NO.		
	ILLINOIS	FED. AID PROJECT		

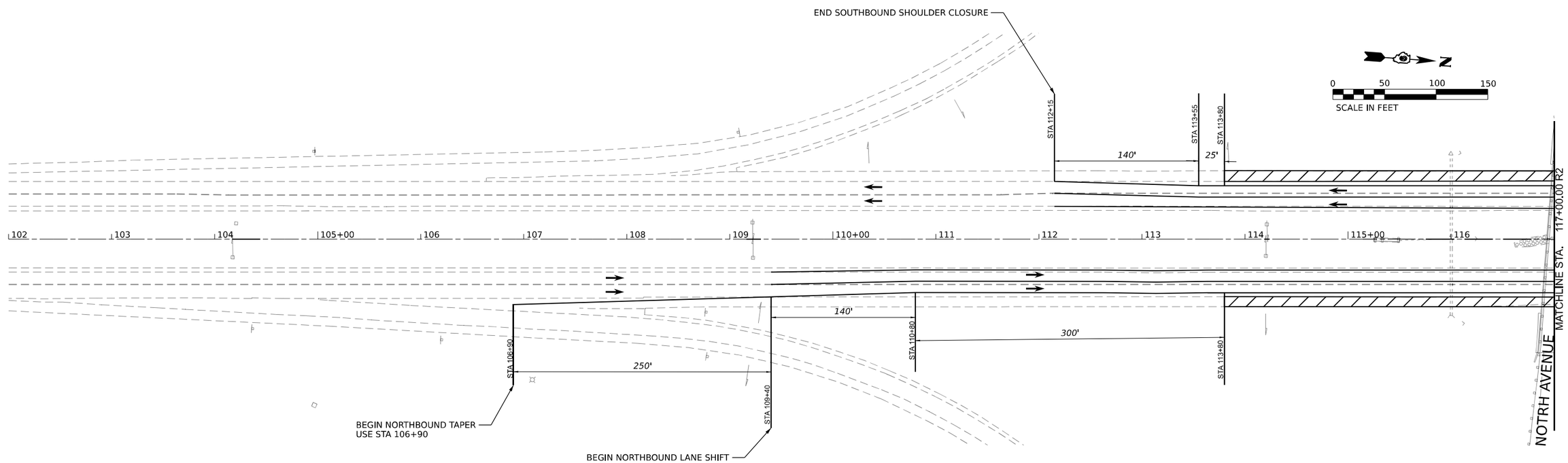

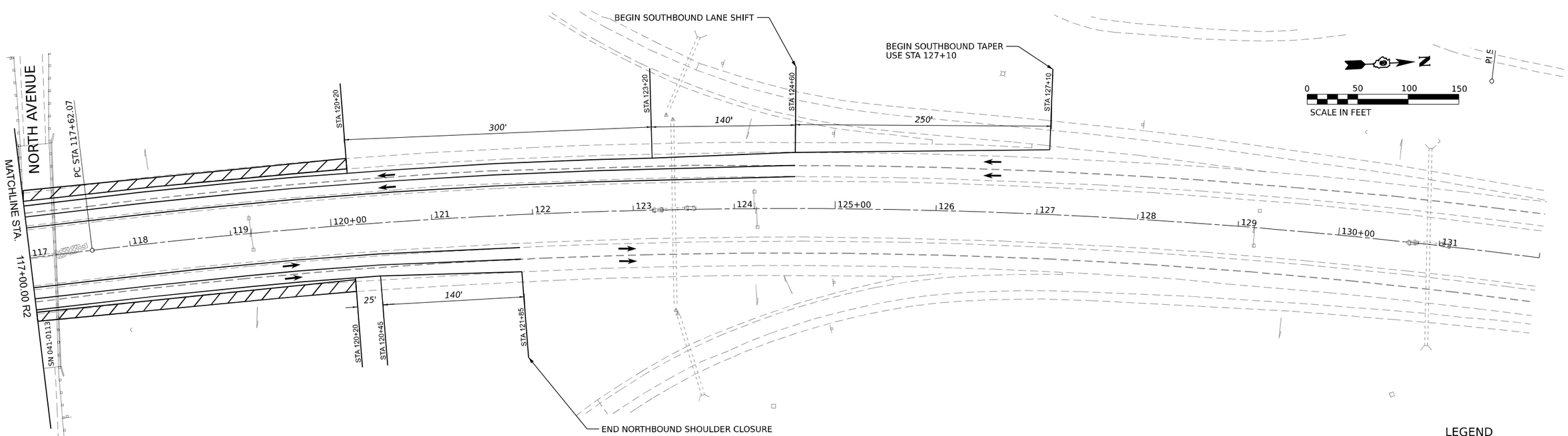

MODEL: Ina Road Overpass - Ina Road Overpass [Sheet]
FILE NAME: J:\2021\6084\Cadd\Design\CAD_Sheets\D978884-sht-staging_Shoulder_Ina Rd Overpass.dgn

ABNA DESIGN FIRM REG. 184.002117
745 McClintock Drive
Suite 210
Burr Ridge, IL 60527
Ph. 773-881-4788
Fax: 773-239-3728

USER NAME = mudoln	DESIGNED - HH	REVISED -	
	DRAWN - IG	REVISED -	
PLOT SCALE = 0.16666633 ' / in.	CHECKED - HH	REVISED -	
PLOT DATE = 10/11/2024	DATE -	REVISED -	

STATE OF ILLINOIS
DEPARTMENT OF TRANSPORTATION

MAINTENANCE OF TRAFFIC
STAGE 1 NORTH AVENUE OVERPASS

SCALE: 1:50 | SHEET 5 OF 7 SHEETS | STA. TO STA.

F.A.I. RTE.	SECTION	COUNTY	TOTAL SHEETS	SHEET NO.
57	(28-2)B-2; (28-1)B-2	JEFFERSON	598	258
		CONTRACT NO.		
	ILLINOIS	FED. AID PROJECT		

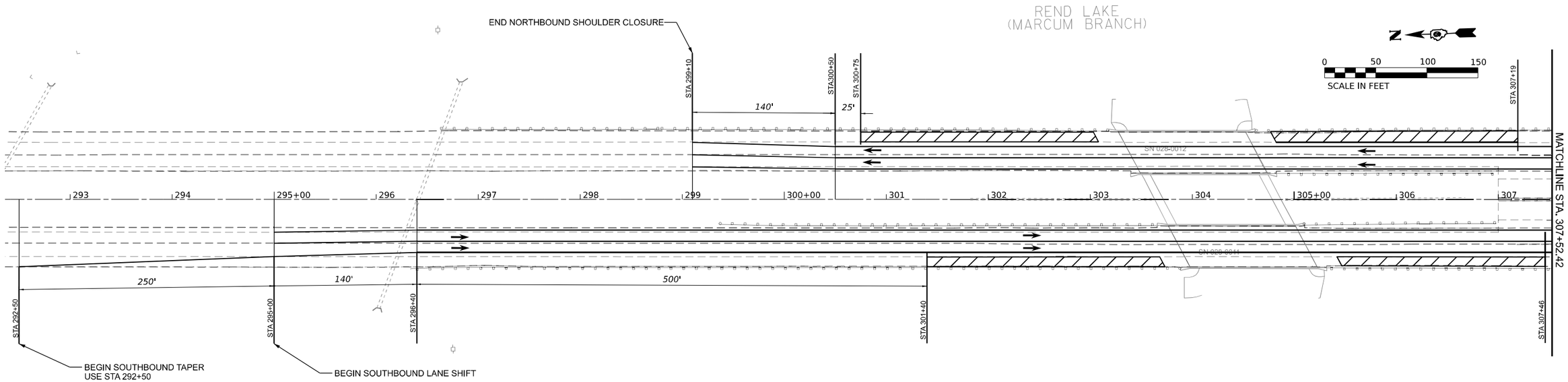

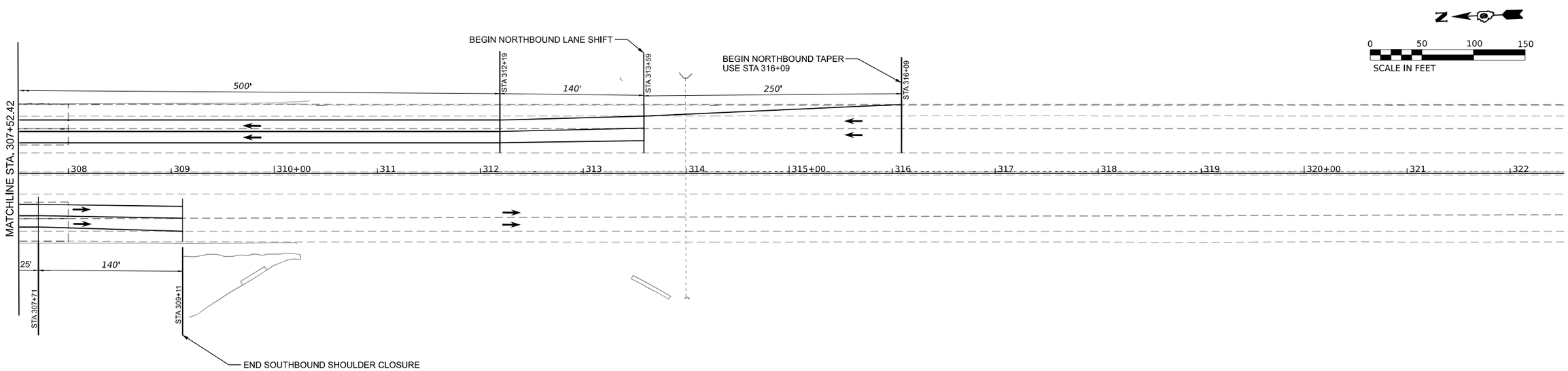

LEGEND

WORKING AREA

MODEL: Marcum Branch Rd - Marcum Branch Rd [Sheet]
FILE NAME: J:\2021\6084\CADD\Design\CAD_Sheets\D978884-sht-staging_Shoulder_Marcum Branch Bridge.dgn

ABNA DESIGN FIRM REG. 184.002117
745 McClintock Drive
Suite 210
Burr Ridge, IL 60527
Ph. 773-881-4788
Fax: 773-239-3728

USER NAME = muddin	DESIGNED - HH	REVISED -	
	DRAWN - IG	REVISED -	
PLOT SCALE = 0.16666633 ' / in.	CHECKED - HH	REVISED -	
PLOT DATE = 10/11/2024	DATE -	REVISED -	

STATE OF ILLINOIS
DEPARTMENT OF TRANSPORTATION

MAINTENANCE OF TRAFFIC
STAGE 1 MARCUM BRANCH BRIDGE

SCALE: 1:50 | SHEET 6 OF 7 SHEETS | STA. TO STA.

F.A.I. RTE.	SECTION	COUNTY	TOTAL SHEETS	SHEET NO.
57	(28-2)B-2; (28-1)B-2	FRANKLIN	598	259

CONTRACT NO.

ILLINOIS | FED. AID PROJECT

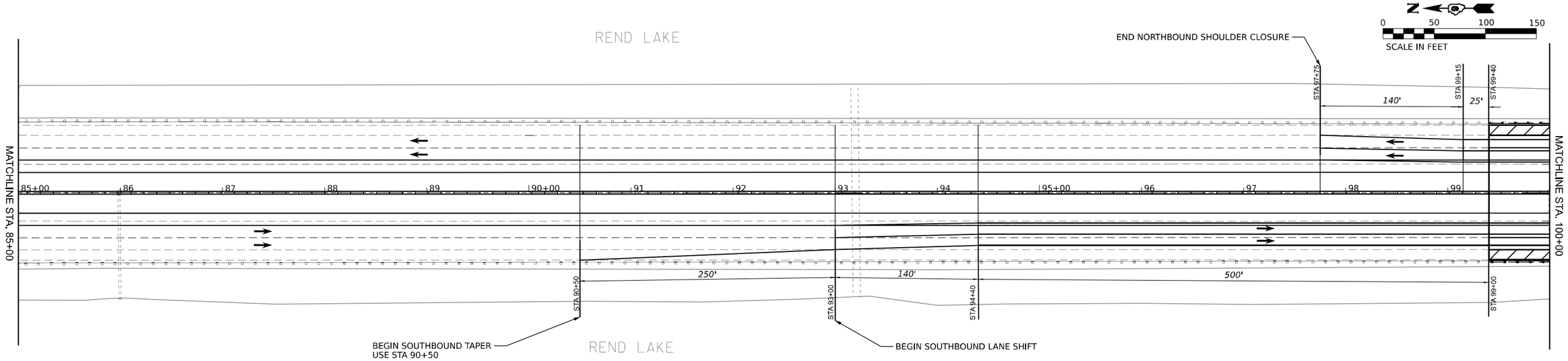

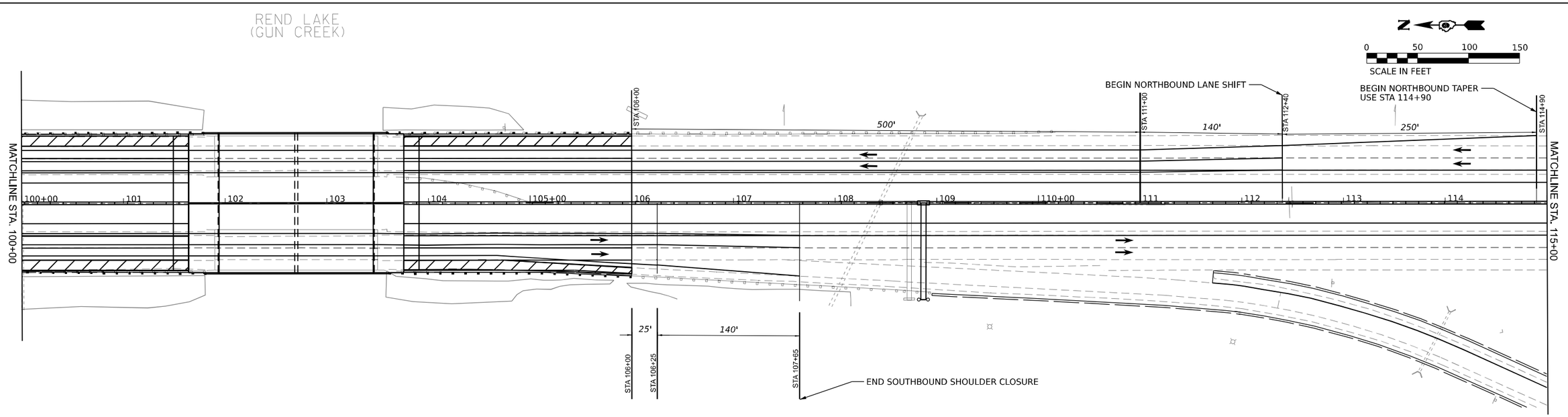

LEGEND

WORKING AREA

MODEL: Marcum Branch Rd - Marcum Branch Rd [Sheet]
FILE NAME: J:\2021\6084\Cadd\Design\CAD_Sheets\D978884-sht-staging_Shoulder_Gun Creek Bridge.dgn

ABNA DESIGN FIRM REG. 184.002117
745 McClintock Drive
Suite 210
Burr Ridge, IL 60527
Ph: 773-481-4788
Fax: 773-239-3728

USER NAME = mudoin	DESIGNED - HH	REVISED -	
	DRAWN - IG	REVISED -	
PLOT SCALE = 0.16666633 ' / in.	CHECKED - HH	REVISED -	
PLOT DATE = 10/11/2024	DATE -	REVISED -	

STATE OF ILLINOIS
DEPARTMENT OF TRANSPORTATION

MAINTENANCE OF TRAFFIC
STAGE 1 GUN CREEK BRIDGE

SCALE: 1:50 | SHEET 7 OF 7 SHEETS | STA. TO STA.

F.A.I. RTE.	SECTION	COUNTY	TOTAL SHEETS	SHEET NO.
57	(28-2)B-2; (28-1)B-2	FRANKLIN	598	260
		CONTRACT NO.		
	ILLINOIS	FED. AID PROJECT		

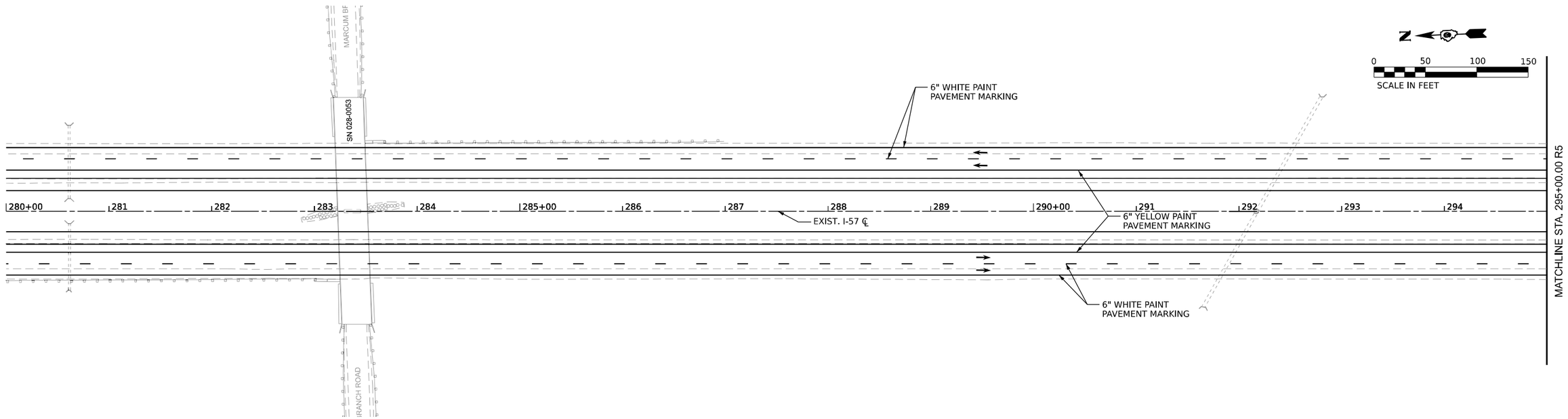

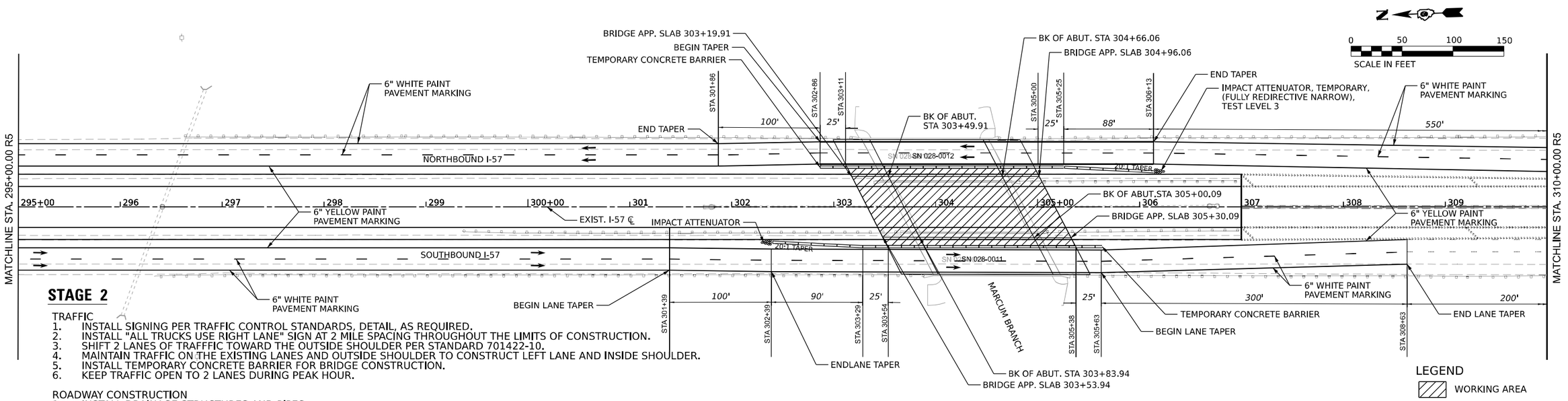

STAGE 2

TRAFFIC

1. INSTALL SIGNING PER TRAFFIC CONTROL STANDARDS, DETAIL, AS REQUIRED.
2. INSTALL "ALL TRUCKS USE RIGHT LANE" SIGN AT 2 MILE SPACING THROUGHOUT THE LIMITS OF CONSTRUCTION.
3. SHIFT 2 LANES OF TRAFFFIC TOWARD THE OUTSIDE SHOULDER PER STANDARD 701422-10.
4. MAINTAIN TRAFFIC ON THE EXISTING LANES AND OUTSIDE SHOULDER TO CONSTRUCT LEFT LANE AND INSIDE SHOULDER.
5. INSTALL TEMPORARY CONCRETE BARRIER FOR BRIDGE CONSTRUCTION.
6. KEEP TRAFFIC OPEN TO 2 LANES DURING PEAK HOUR.

ROADWAY CONSTRUCTION

1. INSTALL DRAINAGE STRUCTURES AND PIPES.
2. CONSTRUCT THE NEW INSIDE LANE AND INSIDE SHOULDER.
3. CONSTRUCT INSIDE LANE AND INSIDE SHOULDER FOR NEW SN 028-0090/SN 028-0091.
4. CONSTRUCT CONCRETE BARRIER.
5. CONSTRUCT APPROACH PAVEMENT AND PCC CONNECTOR.

ABNA DESIGN FIRM REG. 184.002117
745 McClintock Drive
Suite 210
Burr Ridge, IL 60527
Ph. 773-481-4788
Fax: 773-239-3728

USER NAME = muddin	DESIGNED - HH	REVISED -	
	DRAWN - IG	REVISED -	
PLOT SCALE = 0.166600 ' / in.	CHECKED - HH	REVISED -	
PLOT DATE = 10/11/2024	DATE -	REVISED -	

STATE OF ILLINOIS
DEPARTMENT OF TRANSPORTATION

MAINTENANCE OF TRAFFIC
STAGE 2 MARCUM BRANCH

SCALE: 1:50 | SHEET 1 OF 5 SHEETS | STA. TO STA.

F.A.I. RTE.	SECTION	COUNTY	TOTAL SHEETS	SHEET NO.
57	(28-2)B-2; (28-1)B-2	FRANKLIN	598	261
		CONTRACT NO. 78884		
	ILLINOIS	FED. AID PROJECT		

MODEL: I57FRANKLINA-2 - Plan 19 [Sheet]
FILE NAME: J:\2021\6084\Cadd\Design\CAD_Sheets\D978884-sht-staging.dgn

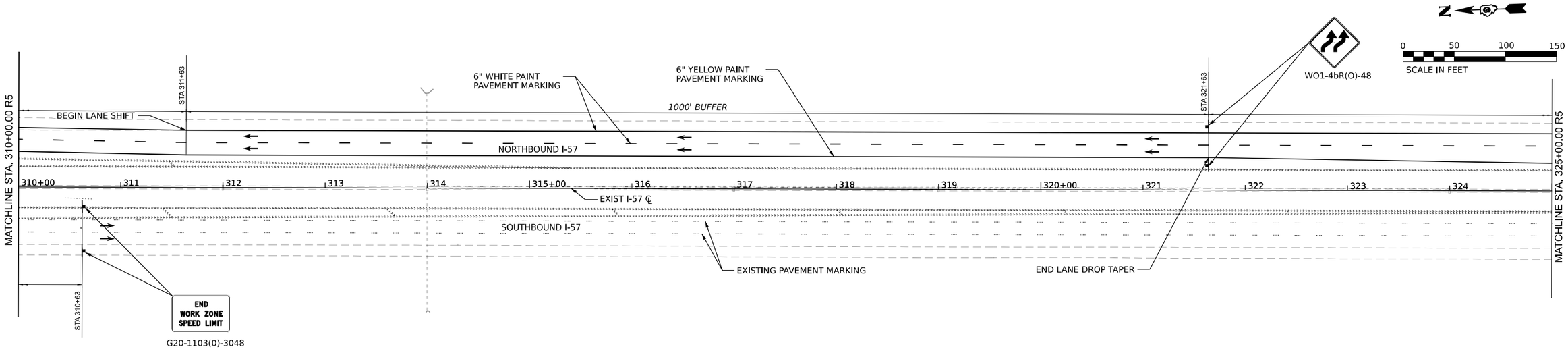

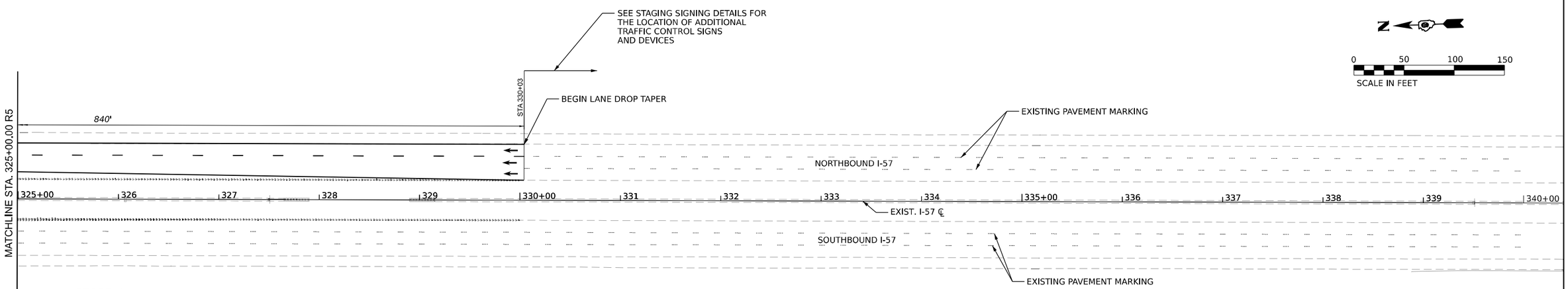

STAGE 2

TRAFFIC
1. INSTALL SIGNING PER TRAFFIC CONTROL STANDARDS, DETAIL, AS REQUIRED.
2. INSTALL "ALL TRUCKS USE RIGHT LANE" SIGN AT 2 MILE SPACING THROUGHOUT THE LIMITS OF CONSTRUCTION.
3. SHIFT 2 LANES OF TRAFFFIC TOWARD THE OUTSIDE SHOULDER PER STANDARD 701422-10.
4. MAINTAIN TRAFFIC ON THE EXISTING LANES AND OUTSIDE SHOULDER TO CONSTRUCT LEFT LANE AND INSIDE SHOULDER.
5. INSTALL TEMPORARY CONCRETE BARRIER FOR BRIDGE CONSTRUCTION.
6. KEEP TRAFFIC OPEN TO 2 LANES DURING PEAK HOUR.

ROADWAY CONSTRUCTION
1. INSTALL DRAINAGE STRUCTURES AND PIPES.
2. CONSTRUCT THE NEW INSIDE LANE AND INSIDE SHOULDER.
3. CONSTRUCT INSIDE LANE AND INSIDE SHOULDER FOR NEW SN 028-0090/SN 028-0091.
4. CONSTRUCT CONCRETE BARRIER.
5. CONSTRUCT APPROACH PAVEMENT AND PCC CONNECTOR.

ABNA DESIGN FIRM REG. 184.002117
745 McClintock Drive
Suite 210
Burr Ridge, IL 60527
Ph. 773-481-4788
Fax: 773-239-3728

USER NAME = muddin	DESIGNED - HH	REVISED -	
	DRAWN - IG	REVISED -	
PLOT SCALE = 0.16660000 ' / in.	CHECKED - HH	REVISED -	
PLOT DATE = 10/11/2024	DATE -	REVISED -	

STATE OF ILLINOIS
DEPARTMENT OF TRANSPORTATION

MAINTENANCE OF TRAFFIC
STAGE 2 MARCUM BRANCH

SCALE: 1:50 | SHEET 2 OF 5 SHEETS | STA. | TO STA.

F.A.I. RTE.	SECTION	COUNTY	TOTAL SHEETS	SHEET NO.
57	(28-2)B-2; (28-1)B-2	FRANKLIN	598	262

CONTRACT NO. 78884

ILLINOIS | FED. AID PROJECT

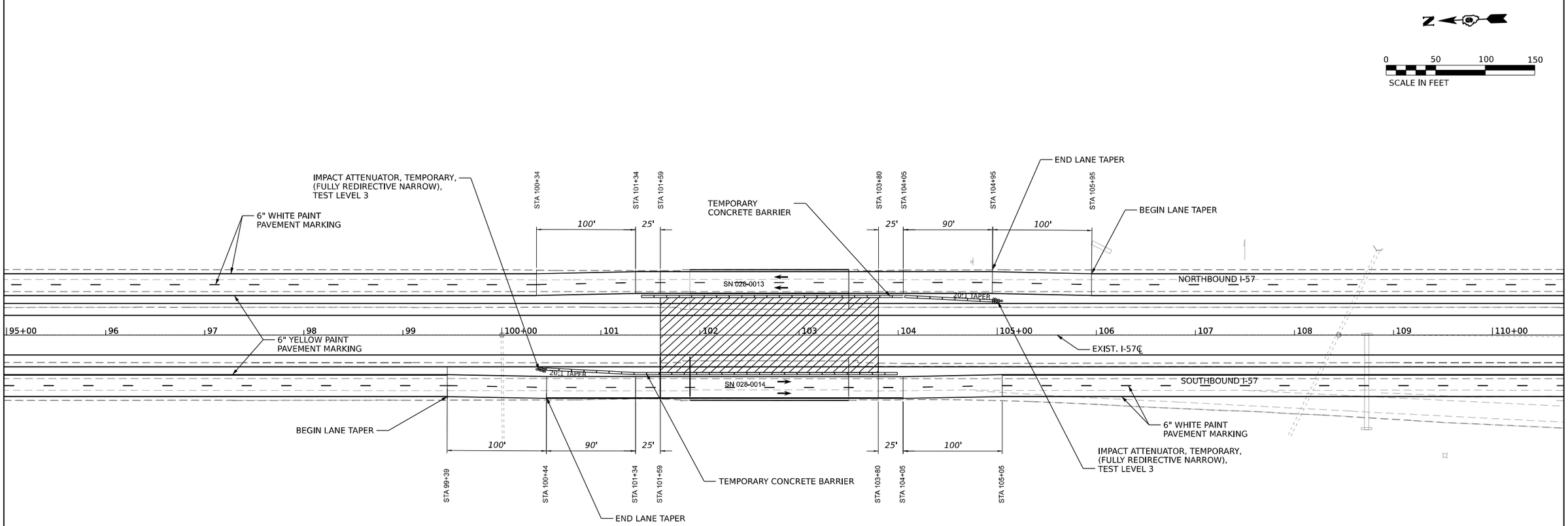

STAGE 2

TRAFFIC
1. INSTALL SIGNING PER TRAFFIC CONTROL STANDARDS, DETAIL, AS REQUIRED.
2. INSTALL "ALL TRUCKS USE RIGHT LANE" SIGN AT 2 MILE SPACING THROUGHOUT THE LIMITS OF CONSTRUCTION.
3. SHIFT 2 LANES OF TRAFFFIC TOWARD THE OUTSIDE SHOULDER PER STANDARD 701422-10.
4. MAINTAIN TRAFFIC ON THE EXISTING LANES AND OUTSIDE SHOULDER TO CONSTRUCT LEFT LANE AND INSIDE SHOULDER.
5. INSTALL TEMPORARY CONCRETE BARRIER FOR BRIDGE CONSTRUCTION.
6. KEEP TRAFFIC OPEN TO 2 LANES DURING PEAK HOUR.

ROADWAY CONSTRUCTION
1. INSTALL DRAINAGE STRUCTURES AND PIPES.
2. CONSTRUCT THE NEW INSIDE LANE AND INSIDE SHOULDER.
3. CONSTRUCT INSIDE LANE AND INSIDE SHOULDER FOR NEW SN 028-0013/SN 028-0014.
4. CONSTRUCT CONCRETE BARRIER.
5. CONSTRUCT APPROACH PAVEMENT AND PCC CONNECTOR.

LEGEND
WORKING AREA

MODEL: SN-028-0013 Stage 1 [Sheet]
FILE NAME: J:\2021\6084\Cadd\Design\CAD_Sheets\D928884-sht-staging.dgn

ABNA DESIGN FIRM REG. 184.002117
745 McClintock Drive
Suite 210
Burr Ridge, IL 60527
Ph. 773-881-4788
Fax: 773-239-3728

USER NAME = muddin	DESIGNED - HH	REVISED -	
	DRAWN - IG	REVISED -	
PLOT SCALE = 0.16666587 ' / in.	CHECKED - HH	REVISED -	
PLOT DATE = 10/11/2024	DATE -	REVISED -	

STATE OF ILLINOIS
DEPARTMENT OF TRANSPORTATION

MAINTENANCE OF TRAFFIC
STAGE 2 REND LAKE (GUN CREEK)

SCALE: 1:50 | SHEET 3 OF 5 SHEETS | STA. TO STA.

F.A. RTE.	SECTION	COUNTY	TOTAL SHEETS	SHEET NO.
57	(28-2)B-2; (28-1)B-2	FRANKLIN	598	263
		CONTRACT NO. 78884		
	ILLINOIS	FED. AID PROJECT		

Long Section Number

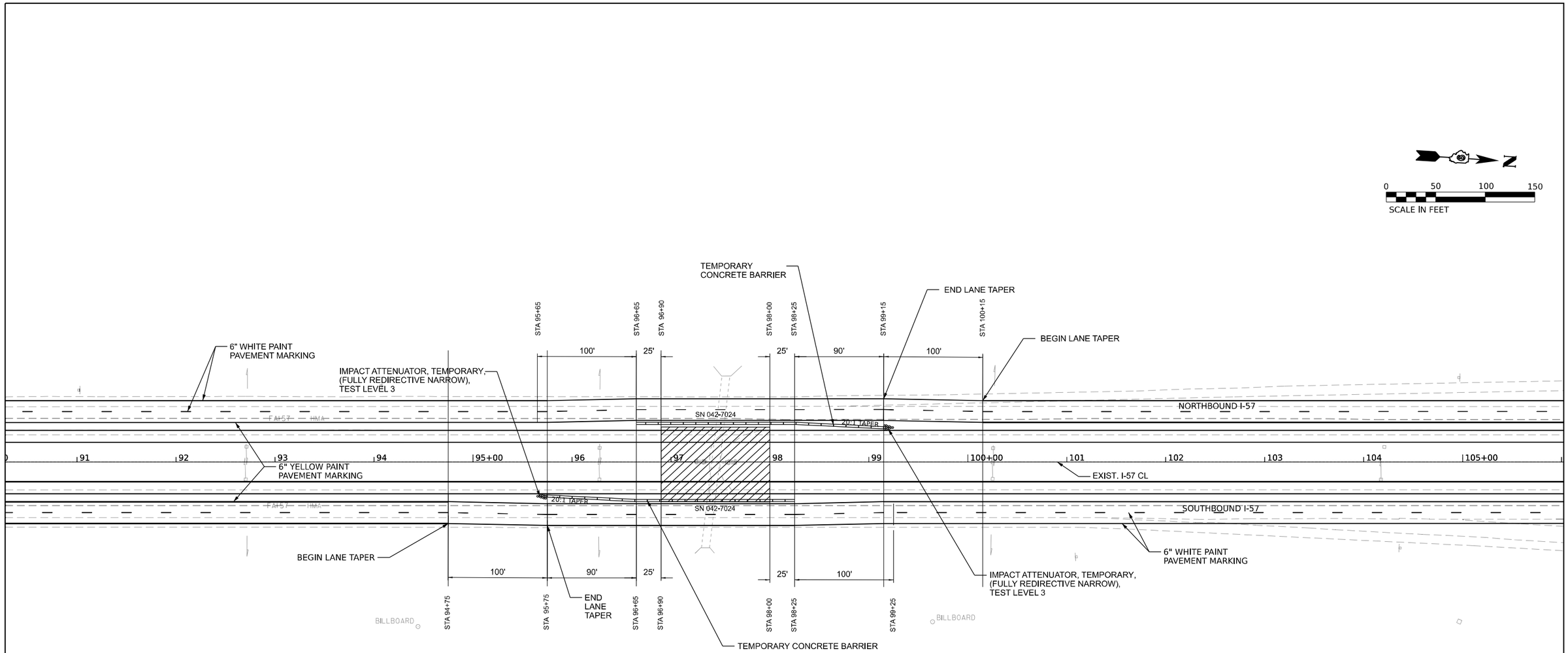

STAGE 2

TRAFFIC
1. INSTALL SIGNING PER TRAFFIC CONTROL STANDARDS, DETAIL, AS REQUIRED.
2. INSTALL "ALL TRUCKS USE RIGHT LANE" SIGN AT 2 MILE SPACING THROUGHOUT THE LIMITS OF CONSTRUCTION.
3. SHIFT 2 LANES OF TRAFFFIC TOWARD THE OUTSIDE SHOULDER PER STANDARD 701422-10.
4. MAINTAIN TRAFFIC ON THE EXISTING LANES AND OUTSIDE SHOULDER TO CONSTRUCT LEFT LANE AND INSIDE SHOULDER.
5. INSTALL TEMPORARY CONCRETE BARRIER FOR BRIDGE CONSTRUCTION.
6. KEEP TRAFFIC OPEN TO 2 LANES DURING PEAK HOUR.

ROADWAY CONSTRUCTION
1. INSTALL DRAINAGE STRUCTURES AND PIPES.
2. CONSTRUCT THE NEW INSIDE LANE AND INSIDE SHOULDER.
3. CONSTRUCT INSIDE LANE AND INSIDE SHOULDER FOR NEW SN 028-0013/SN 028-0014.
4. CONSTRUCT CONCRETE BARRIER.
5. CONSTRUCT APPROACH PAVEMENT AND PCC CONNECTOR.

LEGEND
WORKING AREA

MODEL: SN-042-7024 Stage 1 [Sheet]
FILE NAME: h:\2021\6084\Cadd\Design\CAD_Sheets\D978884-sht-staging.dgn

ABNA DESIGN FIRM REG. 184.002117
745 McClintock Drive
Suite 210
Burr Ridge, IL 60527
Ph. 773-881-4788
Fax: 773-239-3728

USER NAME = muddin	DESIGNED - HH	REVISED -	
	DRAWN - IG	REVISED -	
PLOT SCALE = 0.16666685 ' / in.	CHECKED - HH	REVISED -	
PLOT DATE = 10/11/2024	DATE -	REVISED -	

STATE OF ILLINOIS
DEPARTMENT OF TRANSPORTATION

MAINTENANCE OF TRAFFIC
STAGE 2 CULVERT REPLACEMENT

SCALE: 1:50 | SHEET 4 OF 5 SHEETS | STA. TO STA.

F.A.I RTE.	SECTION	COUNTY	TOTAL SHEETS	SHEET NO.
57	(28-2)B-2; (28-1)B-2	JEFFERSON	598	264
		CONTRACT NO. 78884		
		ILLINOIS	FED. AID PROJECT	

Long Section Number

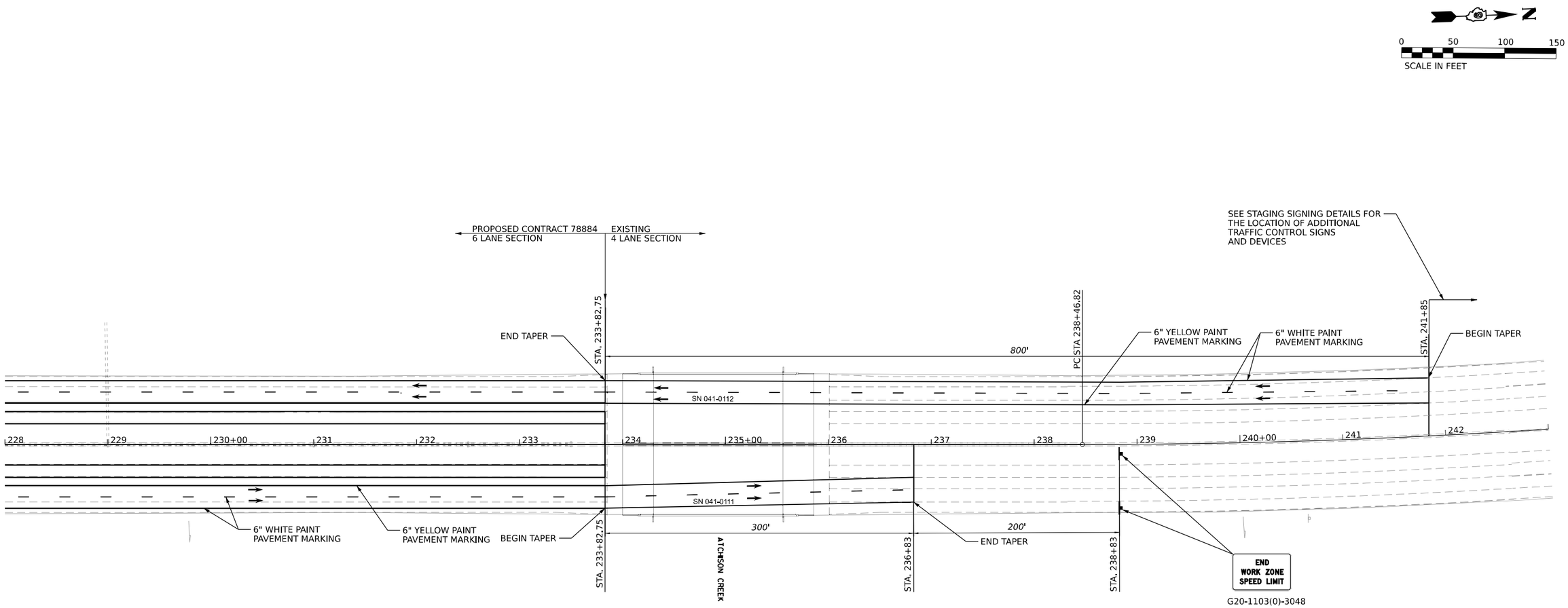

MODEL: I57JEFFERSON-3 - Plan 35 (Sheet) - IG
FILE NAME: J:\2021\6084\Cadd\Design\CAD_Sheets\D978884-sht-staging.dgn

ABNA DESIGN FIRM REG. 184.002117
745 McClintock Drive
Suite 210
Burr Ridge, IL 60527
Ph. 773-681-4788
Fax: 773-239-3728

USER NAME = muddin	DESIGNED - HH	REVISED -	
	DRAWN - IG	REVISED -	
PLOT SCALE = 0.16660000 ' / in.	CHECKED - HH	REVISED -	
PLOT DATE = 10/11/2024	DATE -	REVISED -	

STATE OF ILLINOIS
DEPARTMENT OF TRANSPORTATION

MAINTENANCE OF TRAFFIC
STAGE 2 ATCHISON CREEK

SCALE: 1:50 | SHEET 5 OF 5 SHEETS | STA. TO STA.

F.A.I. RTE.	SECTION	COUNTY	TOTAL SHEETS	SHEET NO.
57	(28-2)B-2; (28-1)B-2	JEFFERSON	598	265

CONTRACT NO. 78884

ILLINOIS | FED. AID PROJECT

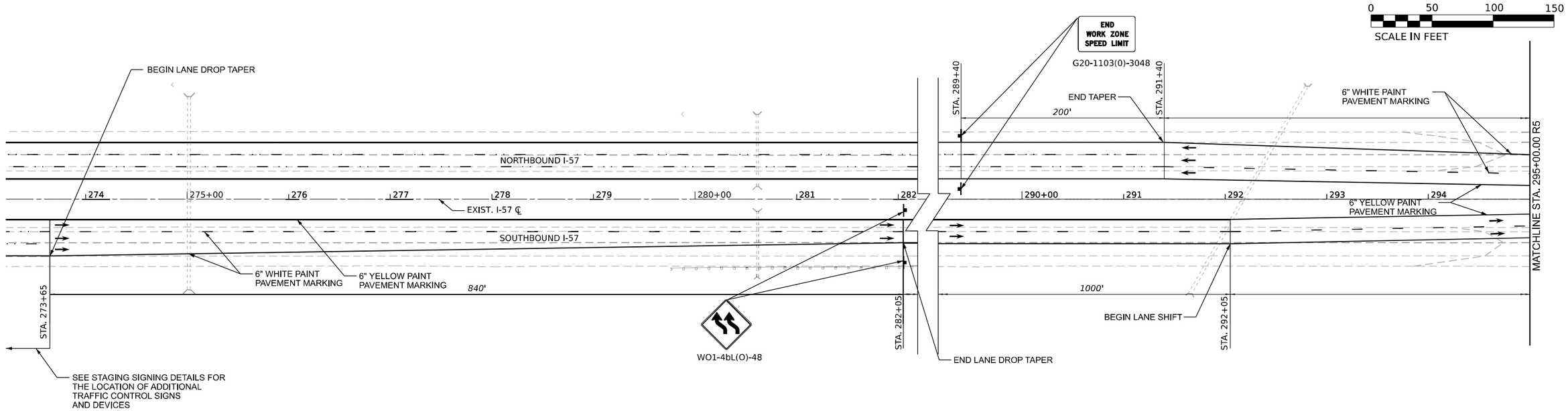

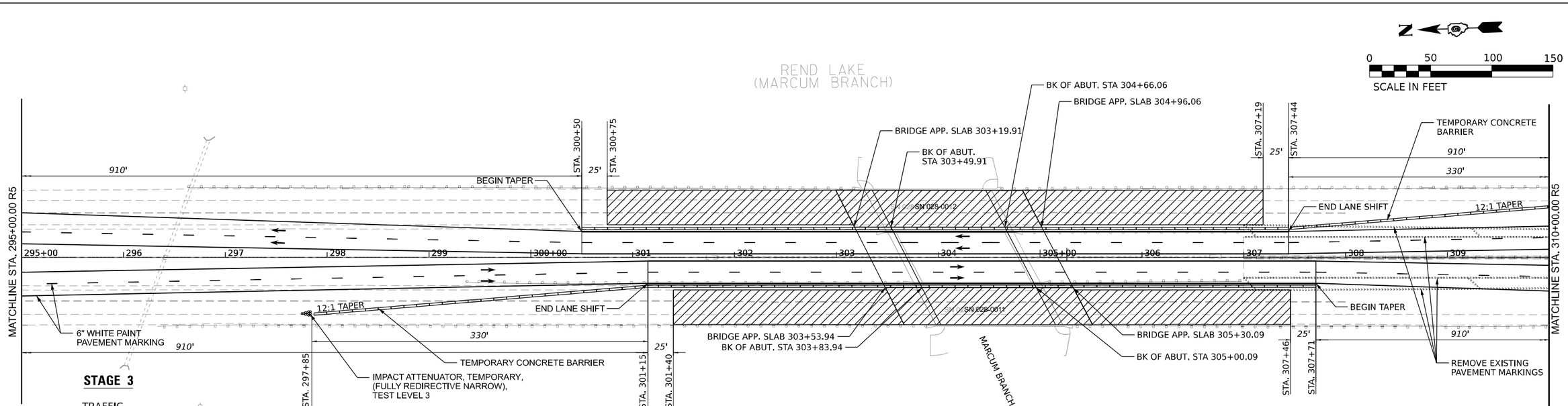

STAGE 3

TRAFFIC
1. INSTALL SIGNING PER TRAFFIC CONTROL STANDARDS, DETAIL, AS REQUIRED.
2. SHIFT 2 LANES OF TRAFFIC TOWARD THE INSIDE SHOULDER AT A RATE OF 1:55 TAPER.
3. MAINTAIN TRAFFIC ON THE INSIDE LANE AND INSIDE SHOULDER TO CONSTRUCT OUTSIDE OF SN 028-0090/SN 028-0091.
4. INSTALL TEMPORARY CONCRETE BARRIER FOR BRIDGE CONSTRUCTION.
5. KEEP TRAFFIC OPEN TO 2 LANES.

ROADWAY CONSTRUCTION
1. CONSTRUCT OUTSIDE PORTION OF SN 028-0090/SN 028-0091.
2. CONSTRUCT APPROACH PAVEMENT AND PCC CONNECTOR.
3. CONSTRUCT FULL DEPTH PAVEMENT IN THE MIDDLE AND OUTSIDE LANE.

ABNA DESIGN FIRM REG. 184.002117
745 McClintock Drive
Suite 210
Burr Ridge, IL 60527
Ph: 773-881-4788
Fax: 773-239-3728

USER NAME = muddin	DESIGNED - HH	REVISED -	
	DRAWN - IG	REVISED -	
PLOT SCALE = 0.16660000 ' / in.	CHECKED - HH	REVISED -	
PLOT DATE = 10/11/2024	DATE -	REVISED -	

STATE OF ILLINOIS
DEPARTMENT OF TRANSPORTATION

MAINTENANCE OF TRAFFIC
STAGE 3 MARCUM BRANCH

SCALE: 1:50 | SHEET 1 OF 6 SHEETS | STA. | TO STA.

F.A.I. RTE.	SECTION	COUNTY	TOTAL SHEETS	SHEET NO.
57	(28-2)B-2; (28-1)B-2	FRANKLIN	598	266
		CONTRACT NO. 78884		
		ILLINOIS	FED. AID PROJECT	

MODEL: I57FRANKLINA-2 - Plan 19 [Sheet] - STAGE 2
FILE NAME: J:\2021\6084\Cadd\Design\CAD Sheets\D9788B4-sht-staging.dgn

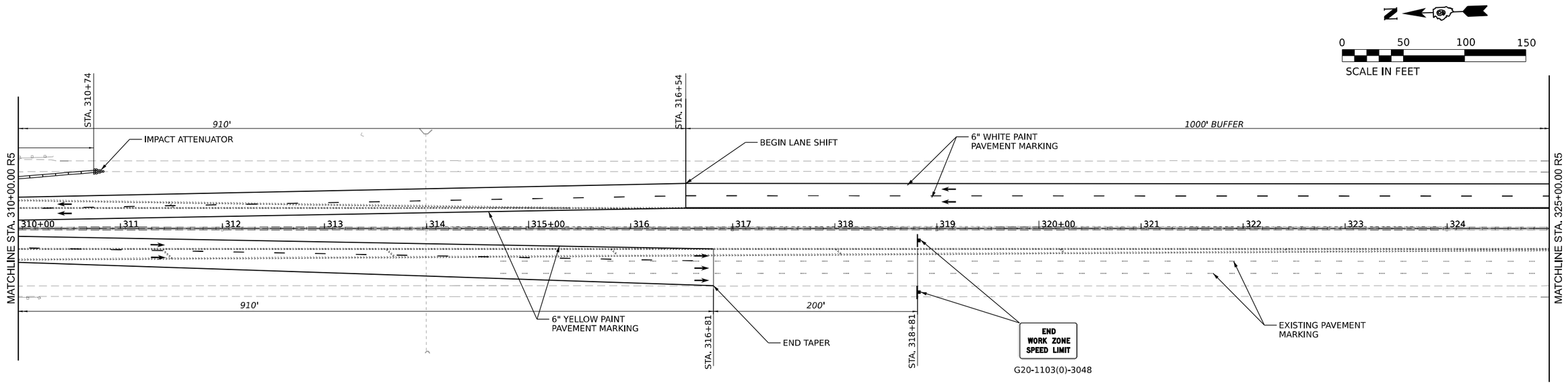

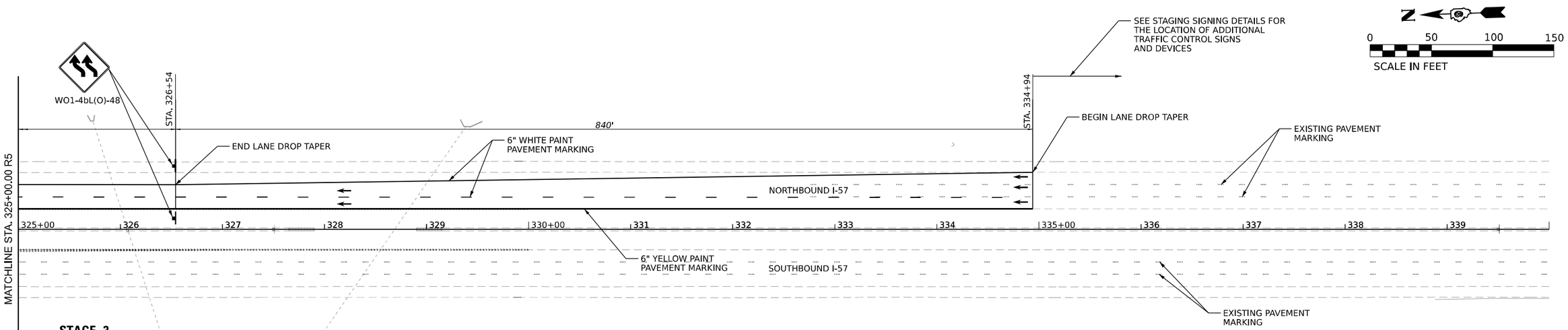

STAGE 3

TRAFFIC
1. INSTALL SIGNING PER TRAFFIC CONTROL STANDARDS, DETAIL, AS REQUIRED.
2. SHIFT 2 LANES OF TRAFFIC TOWARD THE INSIDE SHOULDER AT A RATE OF 1:55 TAPER.
3. MAINTAIN TRAFFIC ON THE INSIDE LANE AND INSIDE SHOULDER TO CONSTRUCT OUTSIDE OF SN 028-0090/SN 028-0091.
4. INSTALL TEMPORARY CONCRETE BARRIER FOR BRIDGE CONSTRUCTION.
5. KEEP TRAFFIC OPEN TO 2 LANES.

ROADWAY CONSTRUCTION
1. CONSTRUCT OUTSIDE PORTION OF SN 028-0090/SN 028-0091.
2. CONSTRUCT APPROACH PAVEMENT AND PCC CONNECTOR.
3. CONSTRUCT FULL DEPTH PAVEMENT IN THE MIDDLE AND OUTSIDE LANE.

ABNA DESIGN FIRM REG. 184.002117
745 McClintock Drive
Suite 210
Burr Ridge, IL 60527
Ph. 773-881-1788
Fax: 773-239-3728

USER NAME = muddin	DESIGNED - HH	REVISED -	
	DRAWN - IG	REVISED -	
PLOT SCALE = 0.16660000 ' / in.	CHECKED - HH	REVISED -	
PLOT DATE = 10/11/2024	DATE -	REVISED -	

STATE OF ILLINOIS
DEPARTMENT OF TRANSPORTATION

MAINTENANCE OF TRAFFIC
STAGE 3 MARCUM BRANCH

SCALE: 1:50 | SHEET 2 OF 6 SHEETS | STA. TO STA.

F.A.I. RTE.	SECTION	COUNTY	TOTAL SHEETS	SHEET NO.
57	(28-2)B-2; (28-1)B-2	FRANKLIN	598	267

CONTRACT NO. 78884
ILLINOIS | FED. AID PROJECT

MODEL: I57FRANKLINA-2 - Plan 19 [Sheet] - STAGE 2 Condrue
FILE NAME: J:\2021\6084\Cadd\Design\CAD_Sheets\D978884-sht-staging.dgn

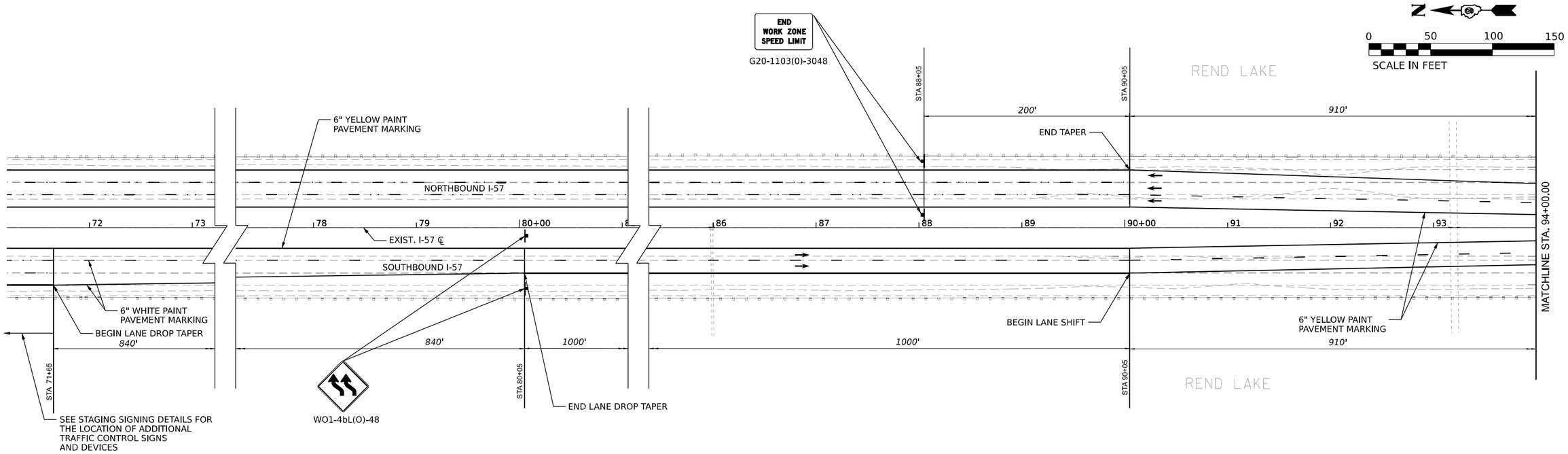

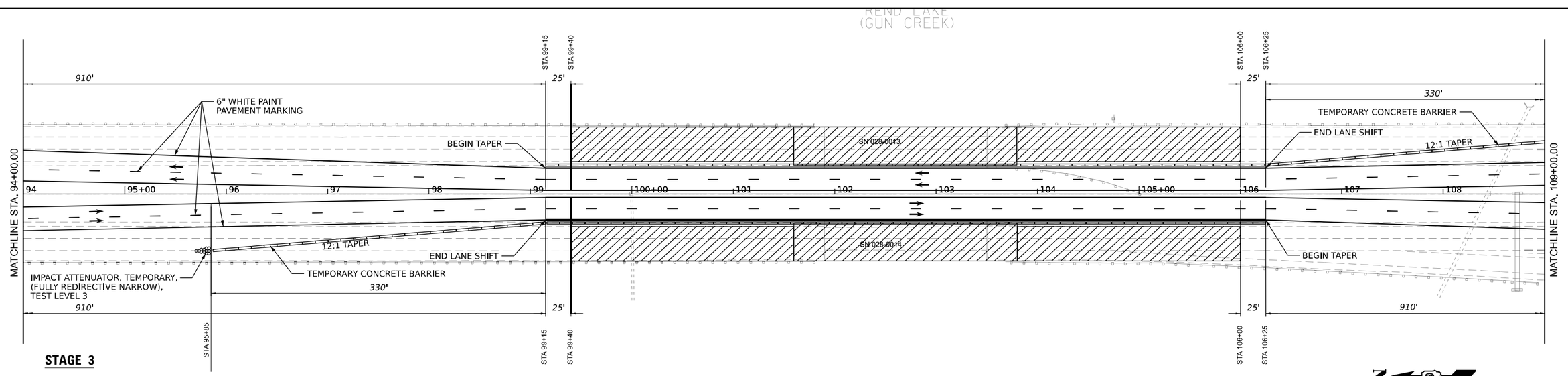

STAGE 3

TRAFFIC
1. INSTALL SIGNING PER TRAFFIC CONTROL STANDARDS, DETAIL, AS REQUIRED.
2. SHIFT 2 LANES OF TRAFFIC TOWARD THE INSIDE SHOULDER AT A RATE OF 1:55 TAPER.
3. MAINTAIN TRAFFIC ON THE INSIDE LANE AND INSIDE SHOULDER TO CONSTRUCT OUTSIDE OF SN 028-0013/SN 028-0014.
4. INSTALL TEMPORARY CONCRETE BARRIER FOR BRIDGE CONSTRUCTION.
5. KEEP TRAFFIC OPEN TO 2 LANES.

ROADWAY CONSTRUCTION
1. CONSTRUCT OUTSIDE PORTION OF SN 028-0013/SN 028-0014.
2. CONSTRUCT APPROACH PAVEMENT AND PCC CONNECTOR.
3. CONSTRUCT FULL DEPTH PAVEMENT IN THE MIDDLE AND OUTSIDE LANE.

LEGEND
WORKING AREA

ABNA DESIGN FIRM REG. 184.002117
745 McClintock Drive
Suite 210
Burr Ridge, IL 60527
Ph. 773-881-4788
Fax: 773-239-3728

USER NAME = muddin	DESIGNED - HH	REVISED -	
	DRAWN - IG	REVISED -	
PLOT SCALE = 0.16666685 ' / in.	CHECKED - HH	REVISED -	
PLOT DATE = 10/11/2024	DATE -	REVISED -	

STATE OF ILLINOIS
DEPARTMENT OF TRANSPORTATION

MAINTENANCE OF TRAFFIC
STAGE 3 REND LAKE (GUN CREEK)

SCALE: 1:50 | SHEET 3 OF 6 SHEETS | STA. TO STA.

F.A.I. RTE.	SECTION	COUNTY	TOTAL SHEETS	SHEET NO.
57	(28-2)B-2; (28-1)B-2	FRANKLIN	598	268

CONTRACT NO. 78884
ILLINOIS | FED. AID PROJECT

MODEL: SN-028-0013 Stage 2 [Sheet]
FILE NAME: J:\2021\6084\Cadd\Design\CAD_Sheets\0978884-sht-staging.dgn

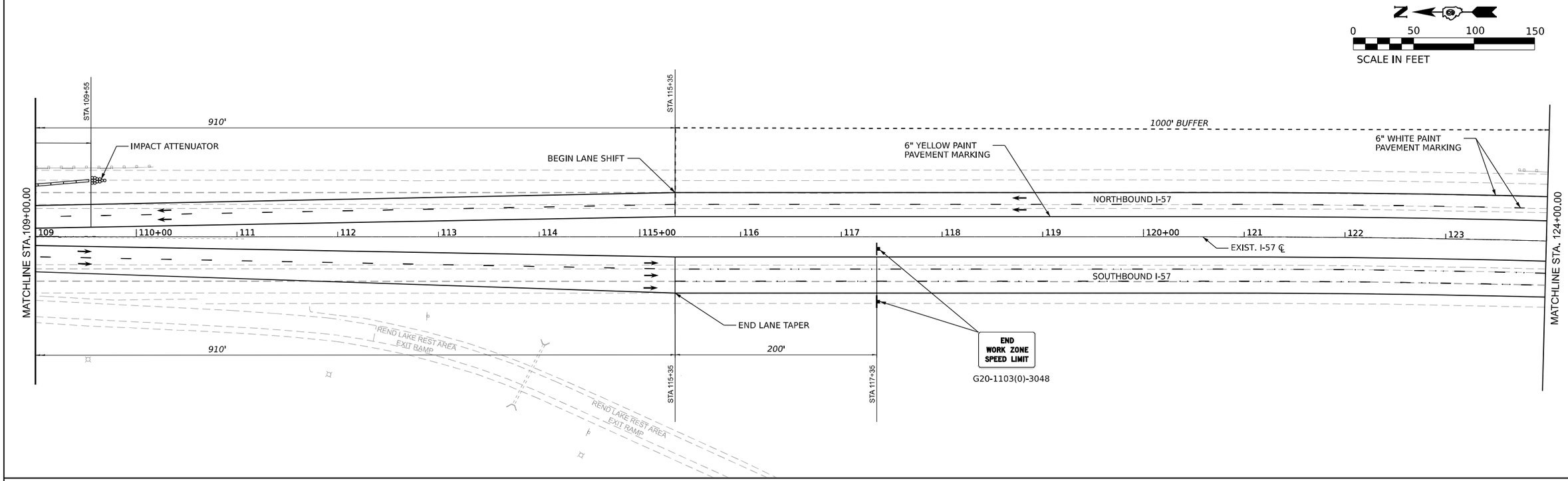

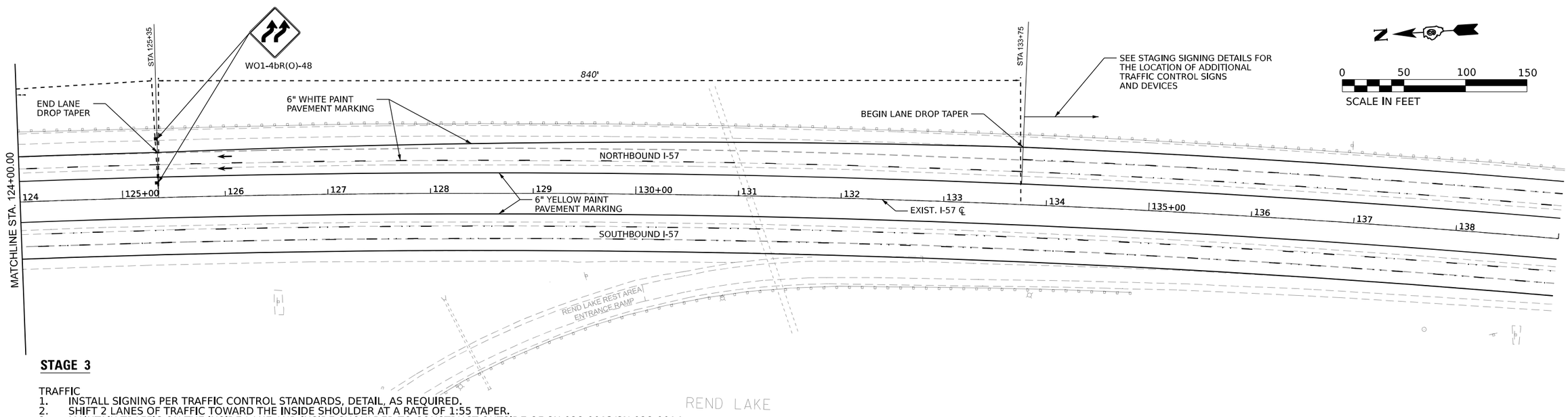

STAGE 3

TRAFFIC
1. INSTALL SIGNING PER TRAFFIC CONTROL STANDARDS, DETAIL, AS REQUIRED.
2. SHIFT 2 LANES OF TRAFFIC TOWARD THE INSIDE SHOULDER AT A RATE OF 1:55 TAPER.
3. MAINTAIN TRAFFIC ON THE INSIDE LANE AND INSIDE SHOULDER TO CONSTRUCT OUTSIDE OF SN 028-0013/SN 028-0014.
4. INSTALL TEMPORARY CONCRETE BARRIER FOR BRIDGE CONSTRUCTION.
5. KEEP TRAFFIC OPEN TO 2 LANES.

ROADWAY CONSTRUCTION
1. CONSTRUCT OUTSIDE PORTION OF SN 028-0013/SN 028-0014.
2. CONSTRUCT APPROACH PAVEMENT AND PCC CONNECTOR.
3. CONSTRUCT FULL DEPTH PAVEMENT IN THE MIDDLE AND OUTSIDE LANE.

LEGEND
WORKING AREA

MODEL: SN-028-0013 Stage 2 [Sheet] - continue
FILE NAME: J:\2021\6084\Cadd\Design\CAD Sheets\D978884-sht-staging.dgn

ABNA DESIGN FIRM REG. 184,002117
745 McClintock Drive Suite 210 Burr Ridge, IL 60527 Ph. 773-481-4788 Fax: 773-239-3728

USER NAME = muddin	DESIGNED - HH	REVISED -	
	DRAWN - IG	REVISED -	
PLOT SCALE = 0.16666685 ' / in.	CHECKED - HH	REVISED -	
PLOT DATE = 10/11/2024	DATE -	REVISED -	

STATE OF ILLINOIS
DEPARTMENT OF TRANSPORTATION

MAINTENANCE OF TRAFFIC
STAGE 3 REND LAKE (GUN CREEK)

SCALE: 1:50 | SHEET 4 OF 6 SHEETS | STA. TO STA.

F.A.I. RTE.	SECTION	COUNTY	TOTAL SHEETS	SHEET NO.
57	(28-2)B-2; (28-1)B-2	FRANKLIN	598	269
		CONTRACT NO. 78884		
	ILLINOIS	FED. AID PROJECT		

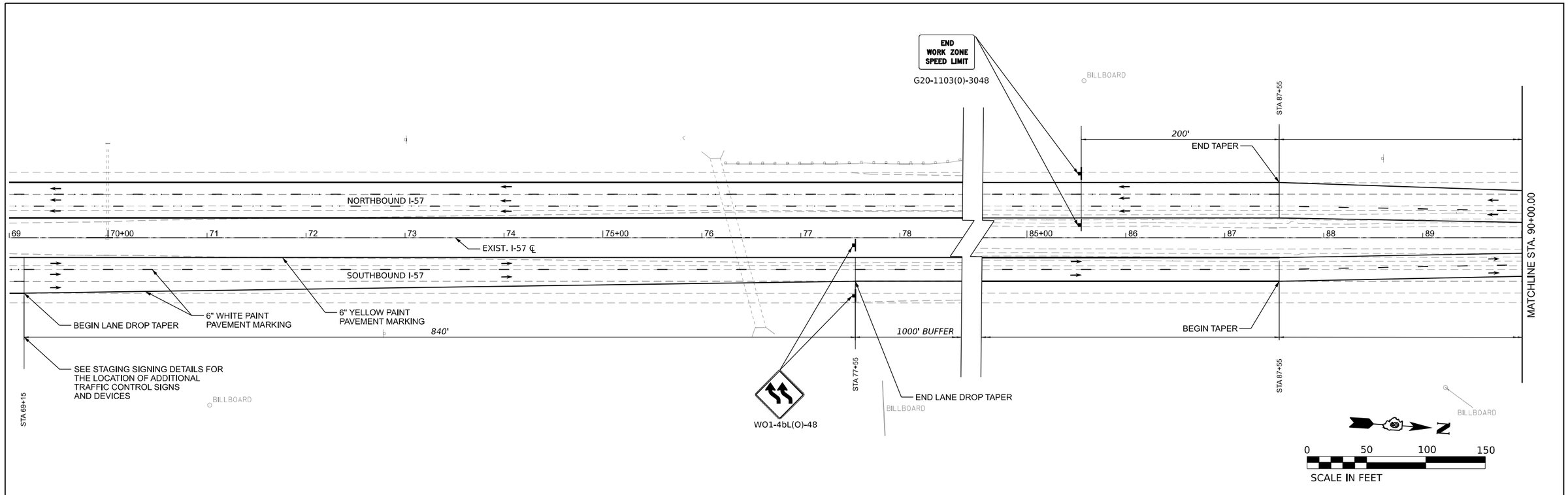

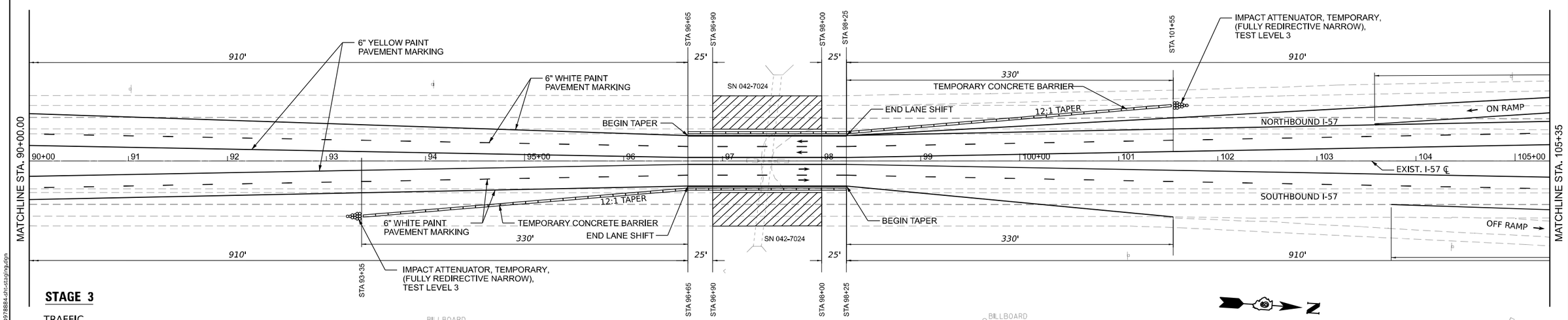

STAGE 3

TRAFFIC
1. INSTALL SIGNING PER TRAFFIC CONTROL STANDARDS, DETAIL, AS REQUIRED.
2. SHIFT 2 LANES OF TRAFFIC TOWARD THE INSIDE SHOULDER AT A RATE OF 1:55 TAPER.
3. MAINTAIN TRAFFIC ON THE INSIDE LANE AND INSIDE SHOULDER TO CONSTRUCT OUTSIDE OF SN 028-0013/SN 028-0014.
4. INSTALL TEMPORARY CONCRETE BARRIER FOR BRIDGE CONSTRUCTION.
5. KEEP TRAFFIC OPEN TO 2 LANES.

ROADWAY CONSTRUCTION
1. CONSTRUCT OUTSIDE PORTION OF SN 028-0013/SN 028-0014.
2. CONSTRUCT APPROACH PAVEMENT AND PCC CONNECTOR.
3. CONSTRUCT FULL DEPTH PAVEMENT IN THE MIDDLE AND OUTSIDE LANE.

LEGEND
WORKING AREA

ABNA DESIGN FIRM REG. 184,002117
745 McClintock Drive Suite 210 Burr Ridge, IL 60527 Ph. 773-481-4788 Fax: 773-239-3728

USER NAME = muddin	DESIGNED - HH	REVISED -	
	DRAWN - IG	REVISED -	
PLOT SCALE = 0.16666685 ' / in.	CHECKED - HH	REVISED -	
PLOT DATE = 10/11/2024	DATE -	REVISED -	

STATE OF ILLINOIS
DEPARTMENT OF TRANSPORTATION

MAINTENANCE OF TRAFFIC
STAGE 3 CULVERT REPLACEMENT

SCALE: 1:50 | SHEET 5 OF 6 SHEETS | STA. TO STA.

F.A.I. RTE.	SECTION	COUNTY	TOTAL SHEETS	SHEET NO.
57	(28-2)B-2; (28-1)B-2	JEFFERSON	598	270
		CONTRACT NO. 78884		
		ILLINOIS	FED. AID PROJECT	

MODEL: SN-042-7024 Stage 2 [Sheet]
FILE NAME: J:\2021\6084\CaddDesign\CAD_Sheets\0978884-sht-staging.dgn

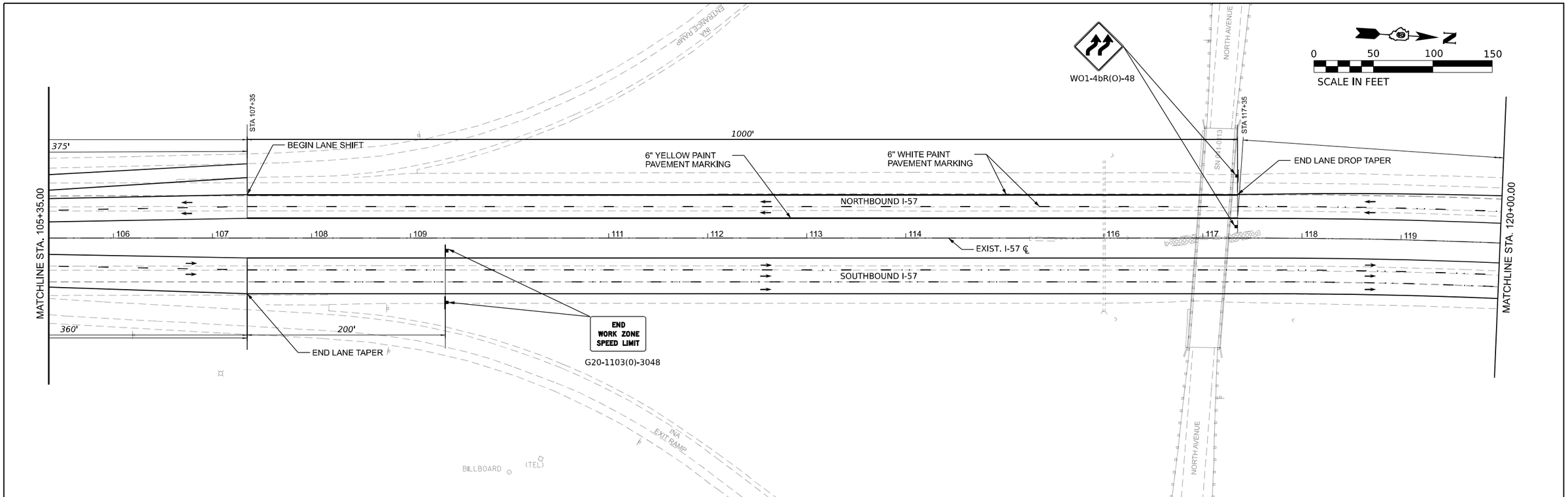

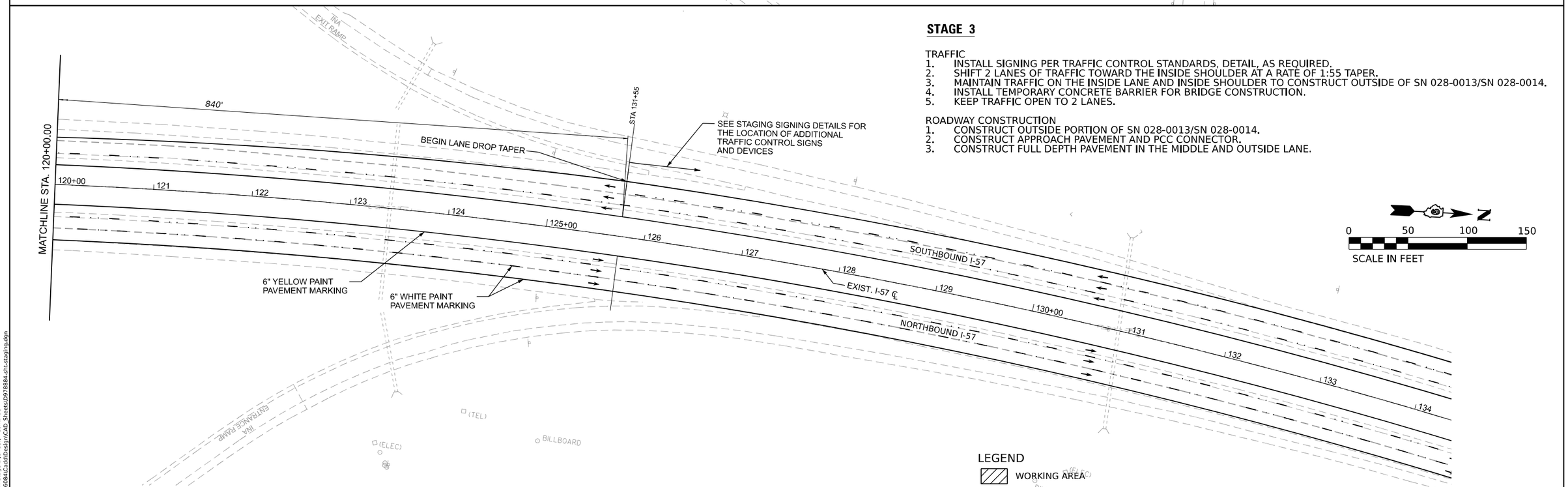

STAGE 3

TRAFFIC
1. INSTALL SIGNING PER TRAFFIC CONTROL STANDARDS, DETAIL, AS REQUIRED.
2. SHIFT 2 LANES OF TRAFFIC TOWARD THE INSIDE SHOULDER AT A RATE OF 1:55 TAPER.
3. MAINTAIN TRAFFIC ON THE INSIDE LANE AND INSIDE SHOULDER TO CONSTRUCT OUTSIDE OF SN 028-0013/SN 028-0014.
4. INSTALL TEMPORARY CONCRETE BARRIER FOR BRIDGE CONSTRUCTION.
5. KEEP TRAFFIC OPEN TO 2 LANES.

ROADWAY CONSTRUCTION
1. CONSTRUCT OUTSIDE PORTION OF SN 028-0013/SN 028-0014.
2. CONSTRUCT APPROACH PAVEMENT AND PCC CONNECTOR.
3. CONSTRUCT FULL DEPTH PAVEMENT IN THE MIDDLE AND OUTSIDE LANE.

ABNA DESIGN FIRM REG. 184,002117
745 McClintock Drive Suite 210 Burr Ridge, IL 60527 Ph. 773-881-4788 Fax: 773-239-0728

USER NAME = muddin	DESIGNED - HH	REVISED -	
	DRAWN - IG	REVISED -	
PLOT SCALE = 0.166667 ' / in.	CHECKED - HH	REVISED -	
PLOT DATE = 10/11/2024	DATE -	REVISED -	

STATE OF ILLINOIS
DEPARTMENT OF TRANSPORTATION

MAINTENANCE OF TRAFFIC
STAGE 3 CULVERT REPLACEMENT

SCALE: 1:50 | SHEET 6 OF 6 SHEETS | STA. | TO STA.

F.A.I. RTE.	SECTION	COUNTY	TOTAL SHEETS	SHEET NO.
57	(28-2)B-2; (28-1)B-2	JEFFERSON	598	271

CONTRACT NO. 78884

ILLINOIS | FED. AID PROJECT

MODEL: SN-042-7024 Stage 2 [Sheet] - Continue
FILE NAME: J:\2021\6084\Cadd\Design\CAD Sheets\0978884-dhc-staging.dgn

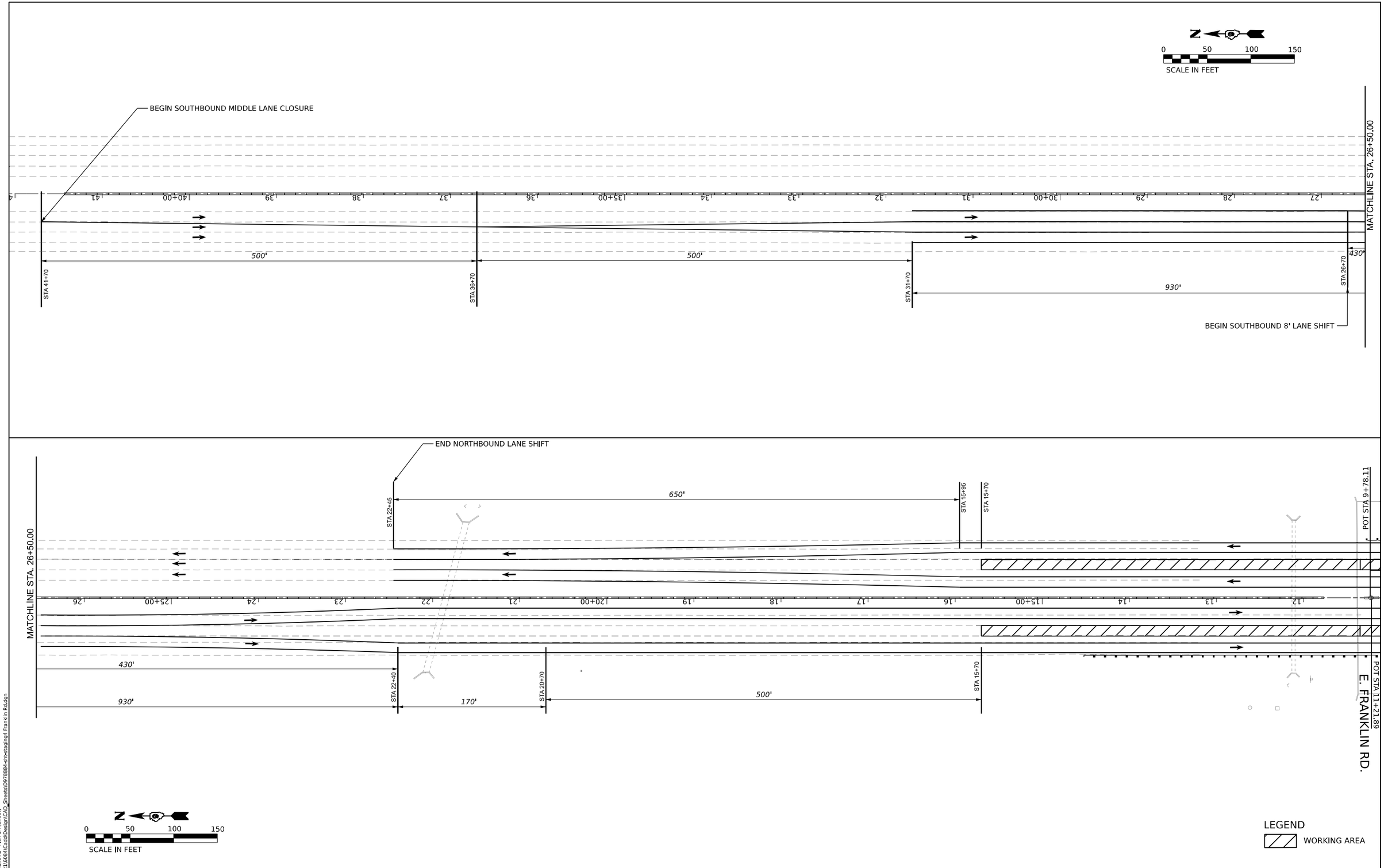

MODEL: I57FRANKLIN4-2 - Plan 1A [Sheet] -
FILE NAME: J:\2021\60184\Cadd\Design\CAD_Sheets\D978884-ph1-staging4 Franklin Rd.dgn

ABNA DESIGN FIRM REG. 184.002117
745 McClintock Drive
Suite 210
Burr Ridge, IL 60527
Ph. 773-881-4788
Fax: 773-239-5728

USER NAME = muddin	DESIGNED - HH	REVISED -	
	DRAWN - IG	REVISED -	
PLOT SCALE = 0.16666600 ' / in.	CHECKED - HH	REVISED -	
PLOT DATE = 10/11/2024	DATE -	REVISED -	

STATE OF ILLINOIS
DEPARTMENT OF TRANSPORTATION

MAINTENANCE OF TRAFFIC
STAGE 4 E. FRANKLIN ROAD

SCALE: 1:50 | SHEET 1 OF 10 SHEETS | STA. TO STA.

F.A.I. RTE.	SECTION	COUNTY	TOTAL SHEETS	SHEET NO.
57	(28-2)B-2; (28-1)B-2	VARIOUS	598	272
		CONTRACT NO. 78884		
	ILLINOIS	FED. AID PROJECT		

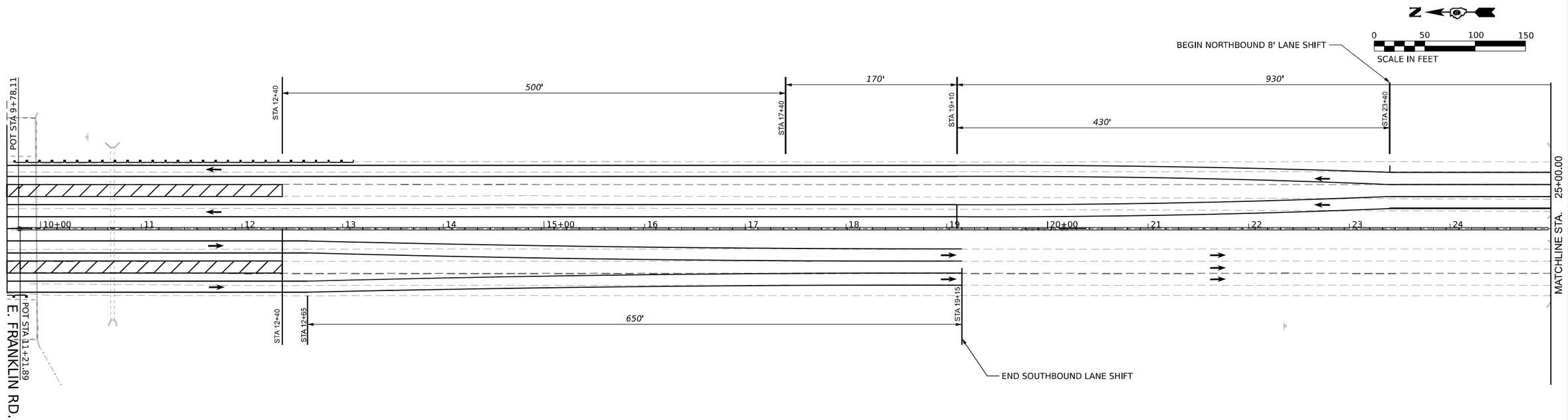

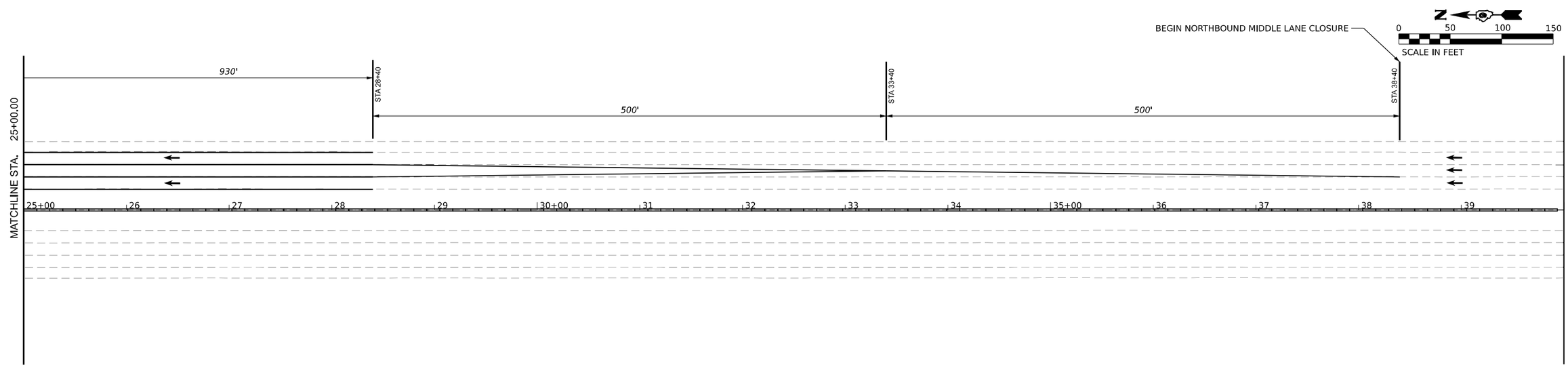

LEGEND

WORKING AREA

MODEL: IS7FRANKLINA-2 - Plan 1 (Sheet)
FILE NAME: J:\2021\6084\CaddDesign\CAD_Sheets\D978884-dht-staging4 Franklin Rd.dgn

ABNA DESIGN FIRM REG. 184.002117
745 McClintock Drive
Suite 210
Burr Ridge, IL 60527
Ph. 773-891-4789
Fax: 773-239-3728

USER NAME = muddin	DESIGNED - HH	REVISED -	
	DRAWN - IG	REVISED -	
PLOT SCALE = 0.16666600 ' / in.	CHECKED - HH	REVISED -	
PLOT DATE = 10/11/2024	DATE -	REVISED -	

STATE OF ILLINOIS
DEPARTMENT OF TRANSPORTATION

MAINTENANCE OF TRAFFIC
STAGE 4 E. FRANKLIN ROAD

SCALE: 1:50 | SHEET 2 OF 10 SHEETS | STA. TO STA.

F.A.I. RTE.	SECTION	COUNTY	TOTAL SHEETS	SHEET NO.
57	(28-2)B-2; (28-1)B-2	VARIOUS	598	273
		CONTRACT NO. 78884		
	ILLINOIS	FED. AID PROJECT		

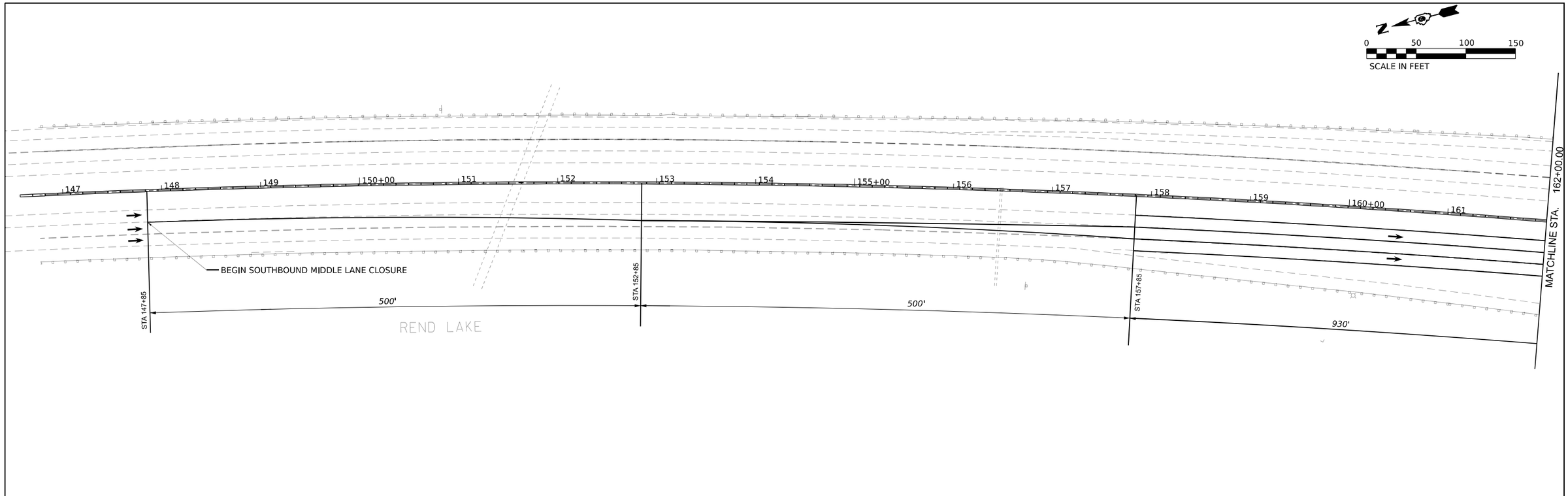

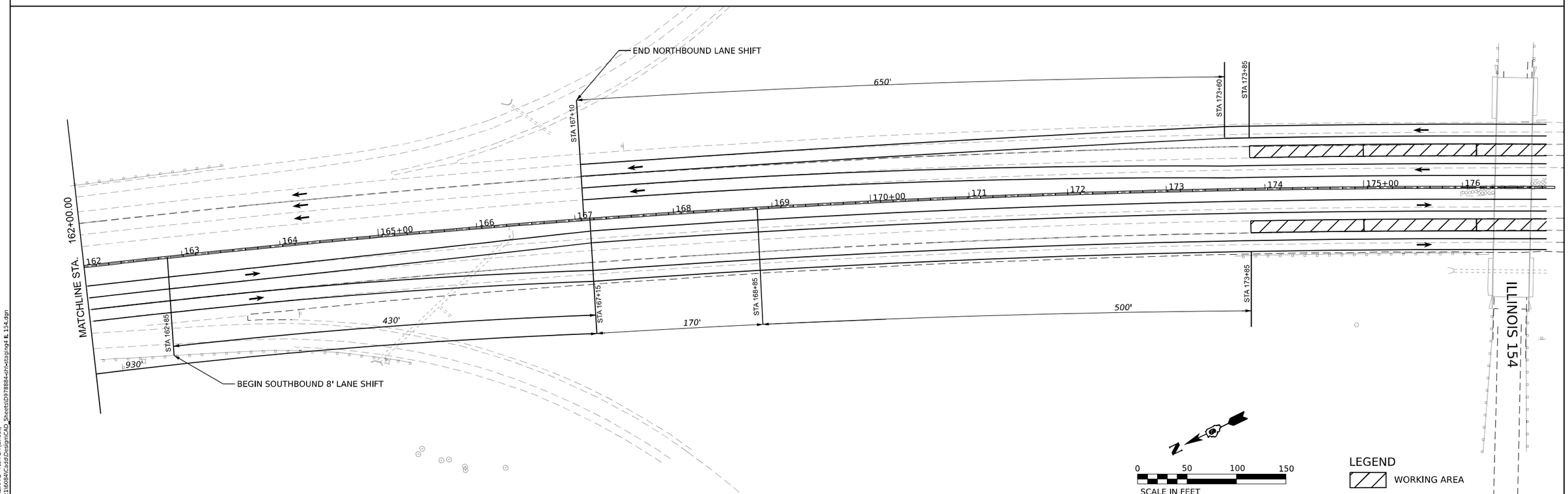

NODEL: I57FRANKLIN\v2 - Plan 1A (Sheet) -
FILE NAME: ...\20216084\Cadd\Design\CAD_Sheets\D978884-sht-staging4 IL 154.dgn

ABNA DESIGN FIRM REG. 184.002117
745 McClintock Drive
Suite 210
Burr Ridge, IL 60527
Ph. 773-881-4788
Fax: 773-239-3728

USER NAME = muddln	DESIGNED - HH	REVISED -	
	DRAWN - IG	REVISED -	
PLOT SCALE = 0.16666600 ' / in.	CHECKED - HH	REVISED -	
PLOT DATE = 10/11/2024	DATE -	REVISED -	

STATE OF ILLINOIS
DEPARTMENT OF TRANSPORTATION

MAINTENANCE OF TRAFFIC
STAGE 4 ILLINOIS 154

SCALE: 1:50 | SHEET 3 OF 10 SHEETS | STA. TO STA.

F.A.I. RTE.	SECTION	COUNTY	TOTAL SHEETS	SHEET NO.
57	(28-2)B-2; (28-1)B-2	FRANKLIN	598	274
		CONTRACT NO. 78884		
	ILLINOIS	FED. AID PROJECT		

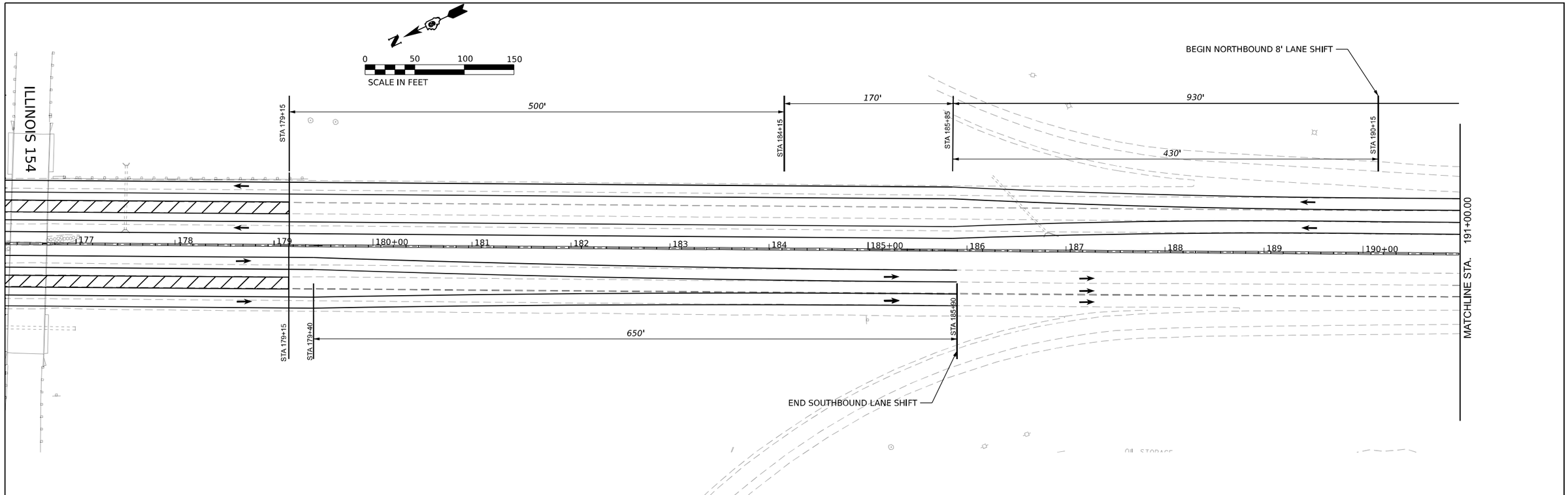

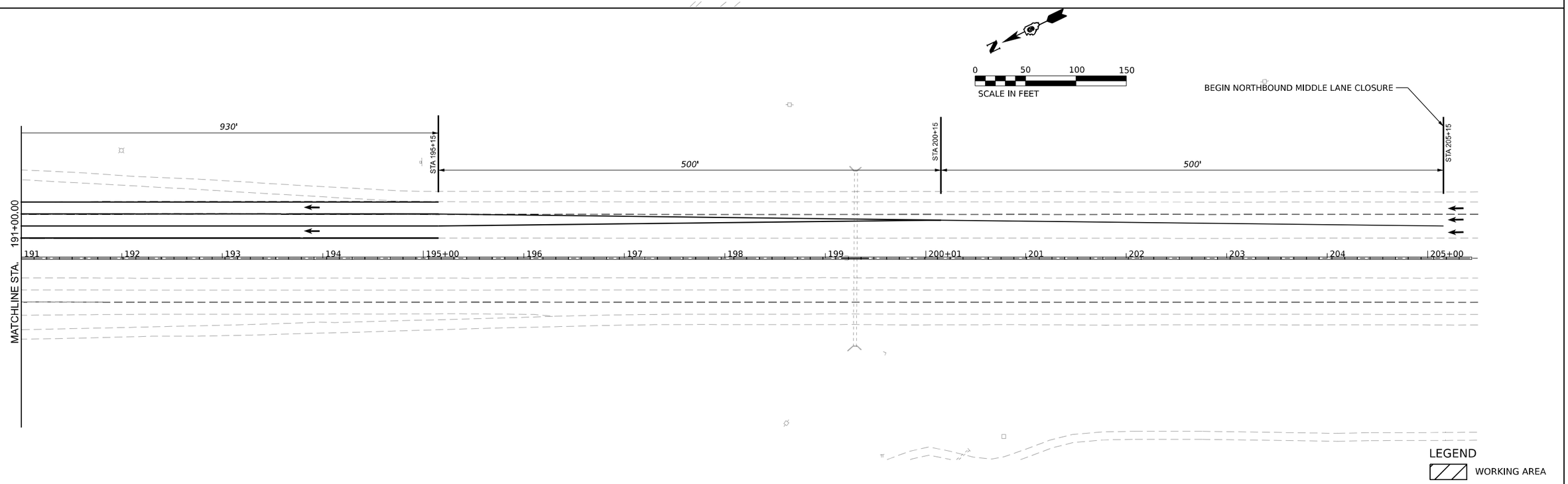

MODEL: I57FRANKLINA-2 - Plan 1 [Sheet]
FILE NAME: J:\2021\6084\CaddDesign\CAD_Sheets\D978884-tht-staging4 IL 154.dgn

ABNA DESIGN FIRM REG. 184.002117
745 McClintock Drive
Suite 210
Burr Ridge, IL 60527
Ph. 773-881-4788
Fax: 773-239-3728

USER NAME = muddin	DESIGNED - HH	REVISED -	
	DRAWN - IG	REVISED -	
PLOT SCALE = 0.16666600 ' / in.	CHECKED - HH	REVISED -	
PLOT DATE = 10/11/2024	DATE -	REVISED -	

STATE OF ILLINOIS
DEPARTMENT OF TRANSPORTATION

MAINTENANCE OF TRAFFIC
STAGE 4 ILLINOIS 154

SCALE: 1:50 | SHEET 4 OF 10 SHEETS | STA. TO STA.

F.A.I. RTE.	SECTION	COUNTY	TOTAL SHEETS	SHEET NO.
57	(28-2)B-2; (28-1)B-2	FRANKLIN	598	275
		CONTRACT NO. 78884		
		ILLINOIS	FED. AID PROJECT	

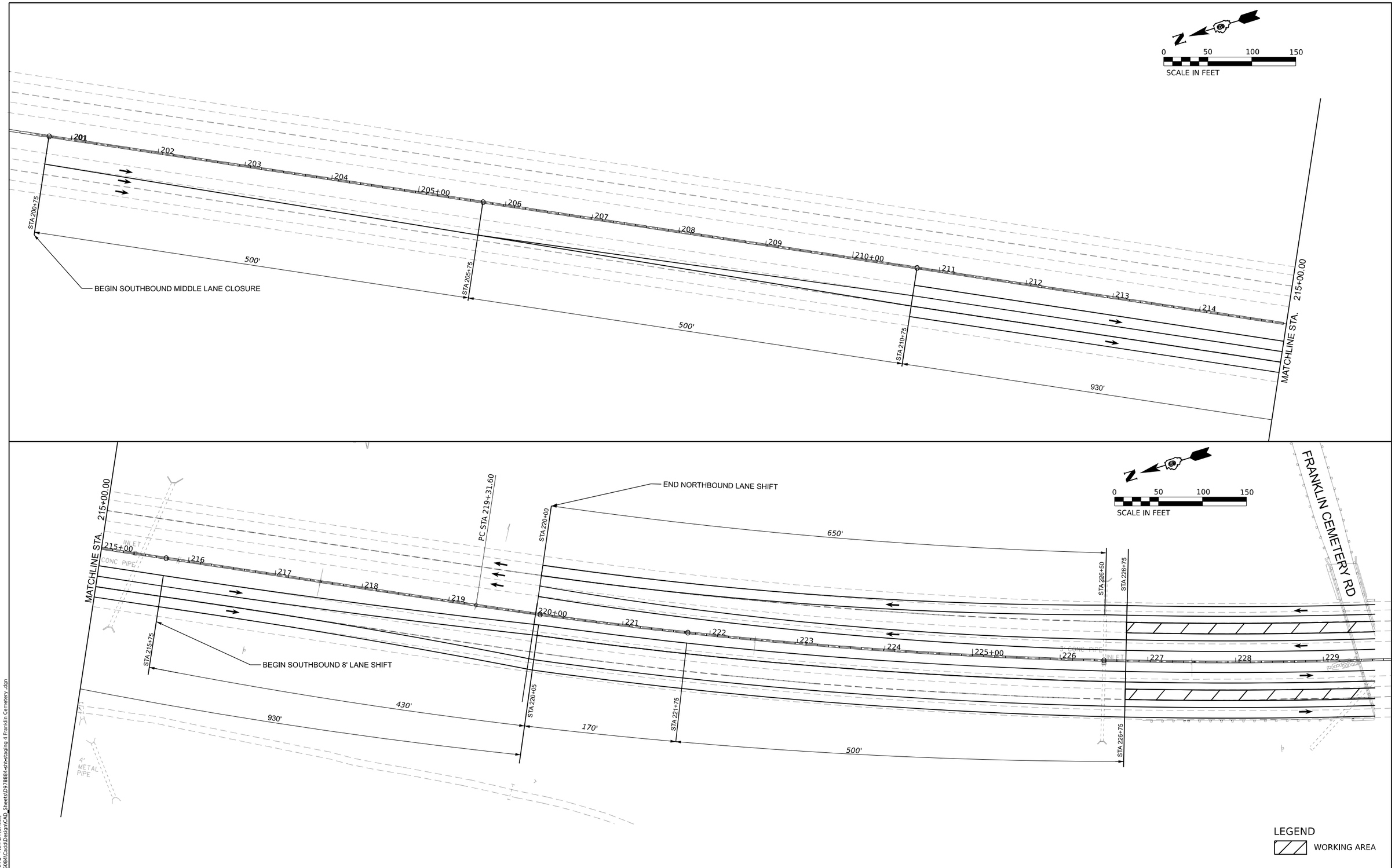

MODEL: I57FRANKLINA-2 - Plan 1A [Sheet] -
FILE NAME: J:\2021\6084\Cadd\Design\CAD_Sheets\D978884-dht-staging 4 Franklin Cemetery.dgn

ABNA DESIGN FIRM REG. 184.002117
745 McClintock Drive
Suite 210
Burr Ridge, IL 60527
Ph: 773-681-4799
Fax: 773-239-3728

USER NAME = muddin	DESIGNED - HH	REVISED -	
	DRAWN - IG	REVISED -	
PLOT SCALE = 0.166666 ' / in.	CHECKED - HH	REVISED -	
PLOT DATE = 10/11/2024	DATE -	REVISED -	

STATE OF ILLINOIS
DEPARTMENT OF TRANSPORTATION

MAINTENANCE OF TRAFFIC
STAGE 4 FRANKLIN CEMETERY ROAD

SCALE: 1:50 | SHEET 5 OF 10 SHEETS | STA. TO STA.

F.A.I. RTE.	SECTION	COUNTY	TOTAL SHEETS	SHEET NO.
57	(28-2)B-2; (28-1)B-2	FRANKLIN	598	276
		CONTRACT NO. 78884		
		ILLINOIS	FED. AID PROJECT	

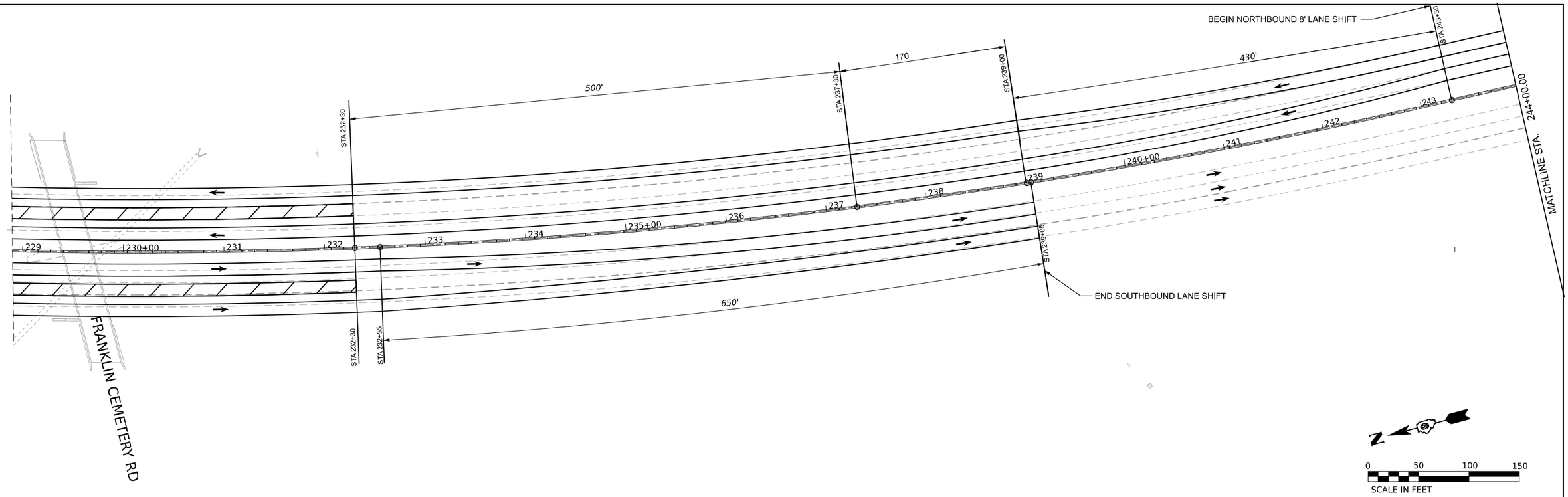

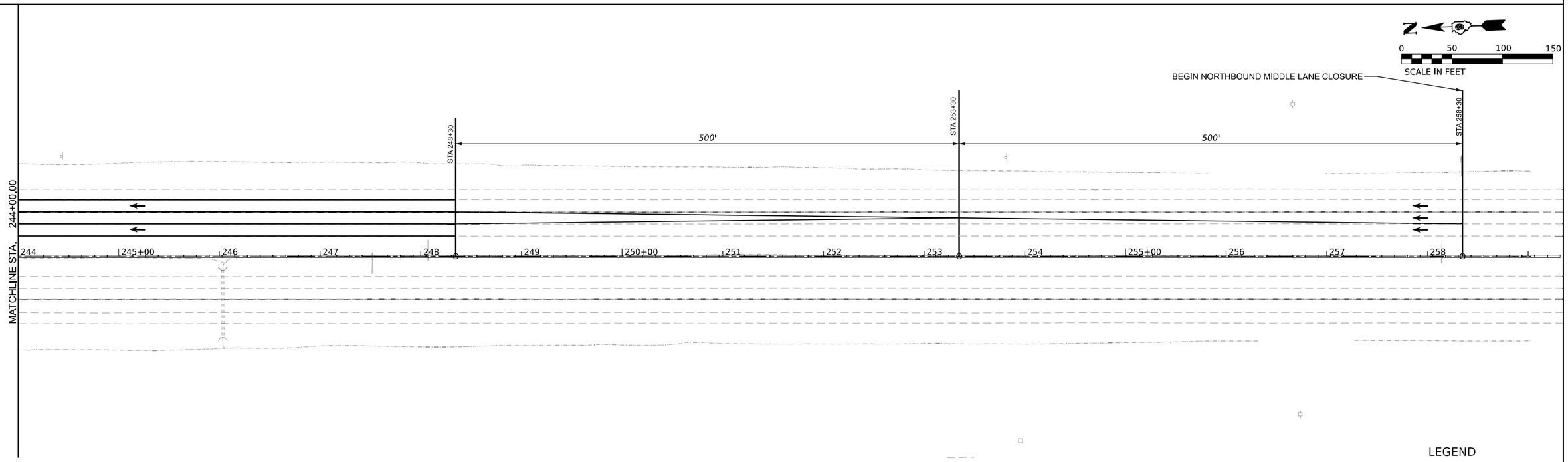

LEGEND

WORKING AREA

MODEL: I57FRANKLINA-2 - Plan 1 [Sheet]
FILE NAME: J:\2021\6084\Cadd\Design\CAD_Sheets\D978884-dh-staging 4 Franklin Cemetery.dgn

ABNA DESIGN FIRM REG. 184.002117
745 McClintock Drive
Suite 210
Burr Ridge, IL 60527
Ph: 773-681-4799
Fax: 773-239-3728

USER NAME = muddin	DESIGNED - HH	REVISED -	
	DRAWN - IG	REVISED -	
PLOT SCALE = 0.16666600 ' / in.	CHECKED - HH	REVISED -	
PLOT DATE = 10/11/2024	DATE -	REVISED -	

STATE OF ILLINOIS
DEPARTMENT OF TRANSPORTATION

MAINTENANCE OF TRAFFIC
STAGE 4 FRANKLIN CEMETERY ROAD

SCALE: 1:50 | SHEET 6 OF 10 SHEETS | STA. TO STA.

F.A.I. RTE.	SECTION	COUNTY	TOTAL SHEETS	SHEET NO.
57	(28-2)B-2; (28-1)B-2	FRANKLIN	598	277
		CONTRACT NO. 78884		
	ILLINOIS	FED. AID PROJECT		

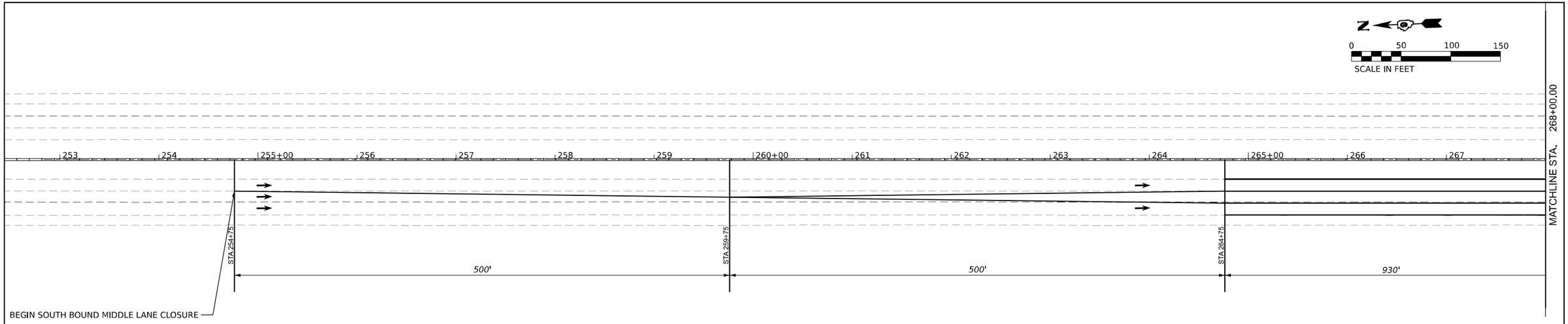

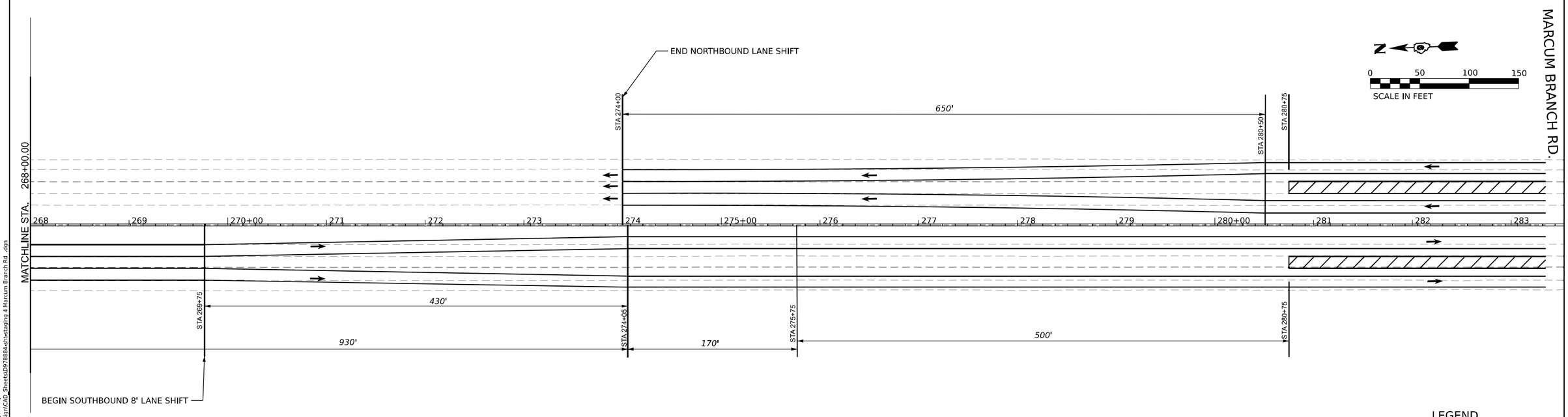

LEGEND

WORKING AREA

MODEL: I57FRANKLINA-2 - Plan 1A [Sheet] -
FILE NAME: J:\2021\6084\CaddDesign\CAD_Sheets\D978884-dhc-staging 4 Marcum Branch Rd .dgn

ABNA DESIGN FIRM REG. 184.002117
745 McClintock Drive
Suite 210
Burr Ridge, IL 60527
Ph. 773-881-4789
Fax: 773-239-3728

USER NAME = muddin	DESIGNED - HH	REVISED -	
	DRAWN - IG	REVISED -	
PLOT SCALE = 0.166666 ' / in.	CHECKED - HH	REVISED -	
PLOT DATE = 10/11/2024	DATE -	REVISED -	

STATE OF ILLINOIS
DEPARTMENT OF TRANSPORTATION

MAINTENANCE OF TRAFFIC
STAGE 4 MARCUM BRANCH ROAD

SCALE: 1:50 | SHEET 7 OF 10 SHEETS | STA. TO STA.

F.A.I. RTE.	SECTION	COUNTY	TOTAL SHEETS	SHEET NO.
57	(28-2)B-2; (28-1)B-2	FRANKLIN	598	278
		CONTRACT NO. 78884		
	ILLINOIS	FED. AID PROJECT		

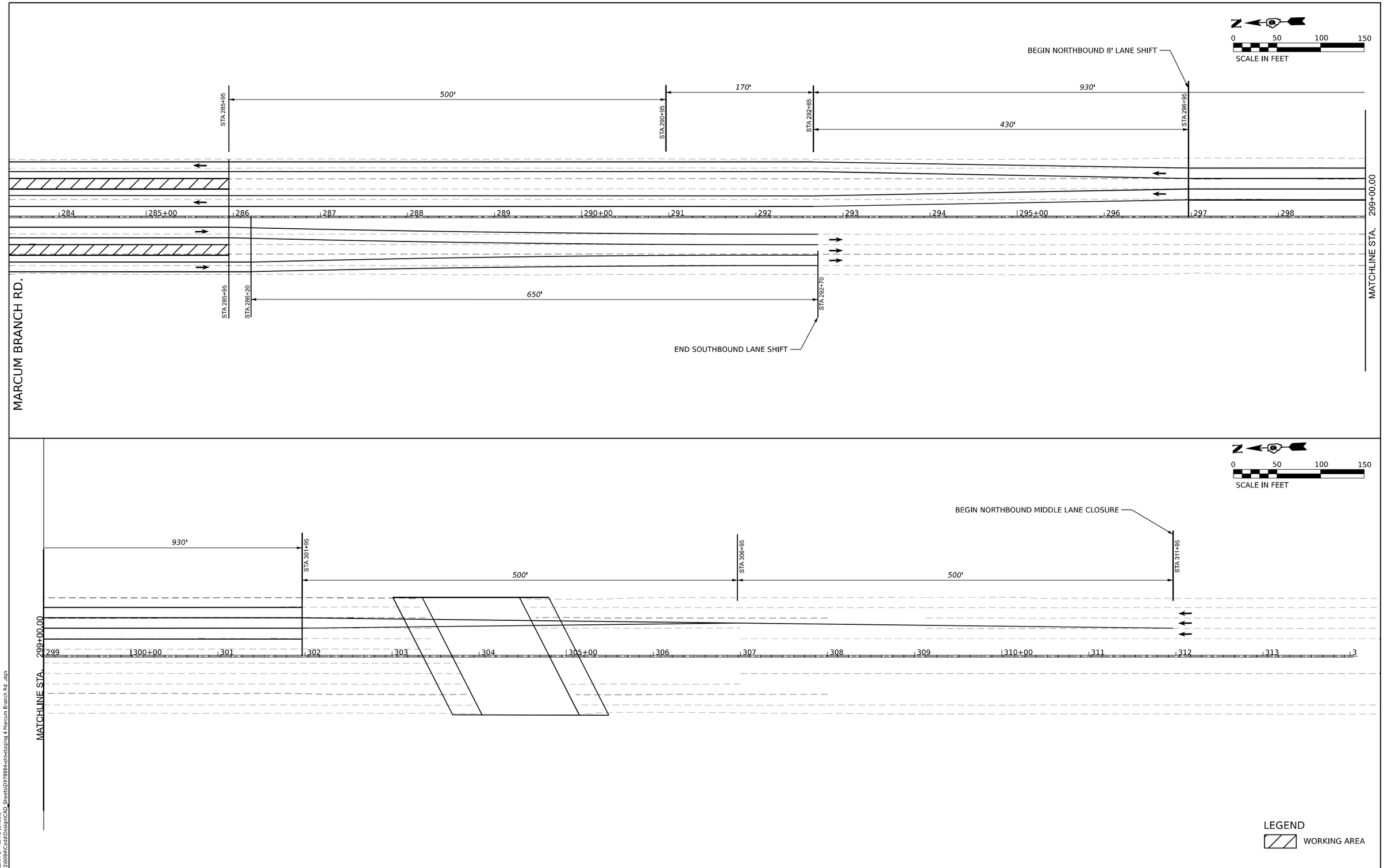

MODEL: I57FRANKLIN4-2 - Plan 1 (Sheet)
FILE NAME: J:\2021\6084\Cadd\Design\CAD_Sheets\D978884-dh-staging 4 Marcum Branch Rd .dgn

ABNA DESIGN FIRM REG. 184.002117
745 McClintock Drive
Suite 210
Burr Ridge, IL 60527
Ph. 773-881-4799
Fax: 773-239-3728

USER NAME = muddin	DESIGNED - HH	REVISED -	
	DRAWN - IG	REVISED -	
PLOT SCALE = 0.166666 ' / in.	CHECKED - HH	REVISED -	
PLOT DATE = 10/11/2024	DATE -	REVISED -	

STATE OF ILLINOIS
DEPARTMENT OF TRANSPORTATION

MAINTENANCE OF TRAFFIC
STAGE 4 MARCUM BRANCH ROAD

SCALE: 1:50 | SHEET 8 OF 10 SHEETS | STA. TO STA.

F.A.I. RTE.	SECTION	COUNTY	TOTAL SHEETS	SHEET NO.
57	(28-2)B-2; (28-1)B-2	FRANKLIN	598	279
		CONTRACT NO. 78884		
	ILLINOIS	FED. AID PROJECT		

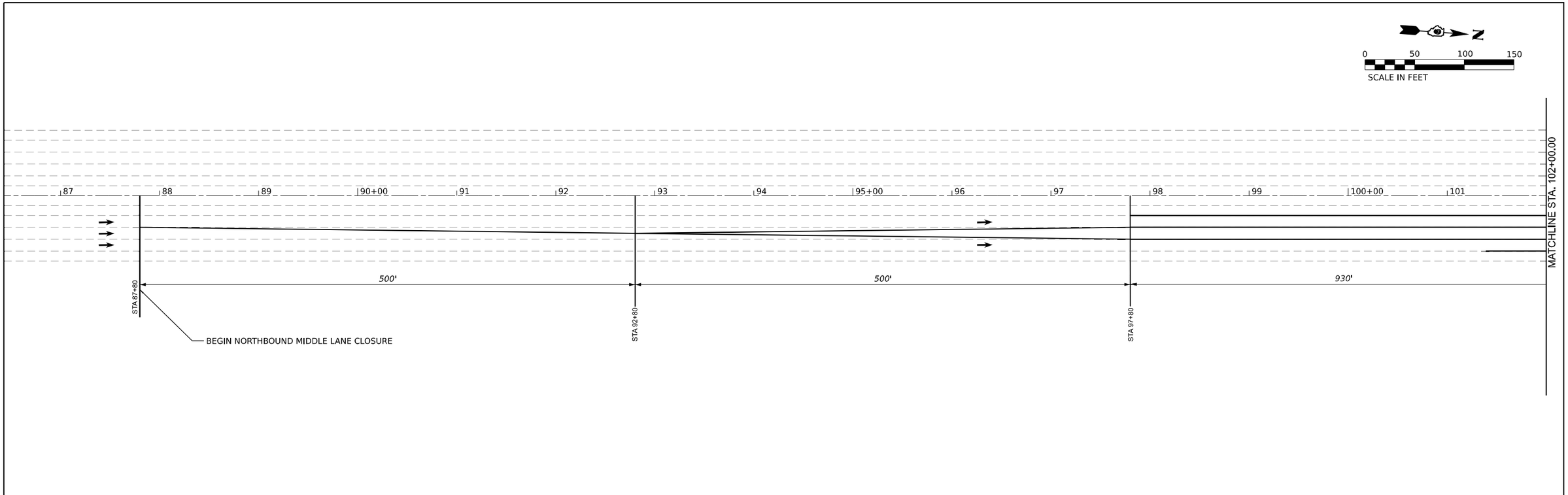

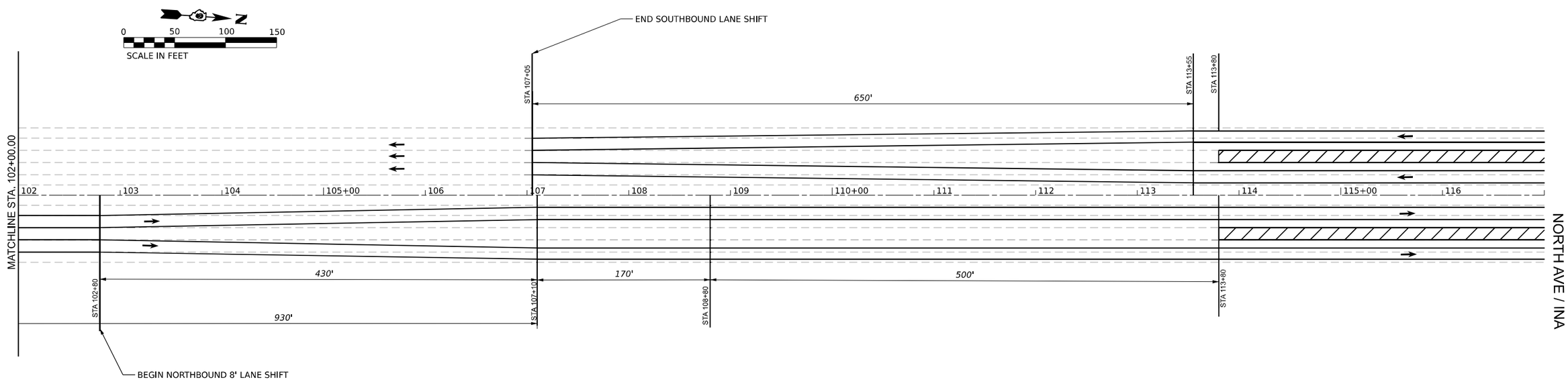

LEGEND

WORKING AREA

MODEL: I57FRANKLINIA-2 - Plan 1A [Sheet]
FILE NAME: J:\2021\6084\CaddDesign\CAD Sheets\0978884-sht-staging4 Ina Rd Overpass.dgn

ABNA DESIGN FIRM REG. 184.002117
745 McClintock Drive
Suite 210
Burr Ridge, IL 60527
Ph. 773-881-4788
Fax: 773-239-3728

USER NAME = muddin	DESIGNED - HH	REVISED -	
	DRAWN - IG	REVISED -	
PLOT SCALE = 0.16666685 ' / in.	CHECKED - HH	REVISED -	
PLOT DATE = 10/11/2024	DATE -	REVISED -	

STATE OF ILLINOIS
DEPARTMENT OF TRANSPORTATION

MAINTENANCE OF TRAFFIC
STAGE 4 INA ROAD

SCALE: 1:50 | SHEET 9 OF 10 SHEETS | STA. TO STA.

F.A.I. RTE.	SECTION	COUNTY	TOTAL SHEETS	SHEET NO.
57	(28-2)B-2; (28-1)B-2	JEFFERSON	598	280
		CONTRACT NO. 78884		
	ILLINOIS	FED. AID PROJECT		

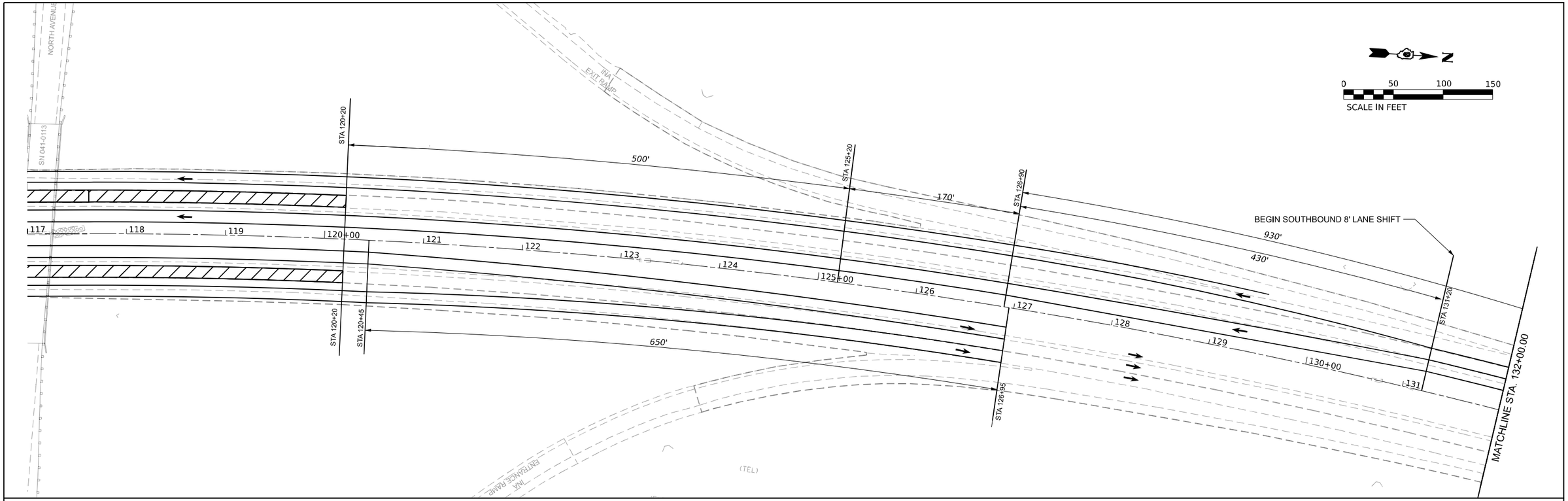

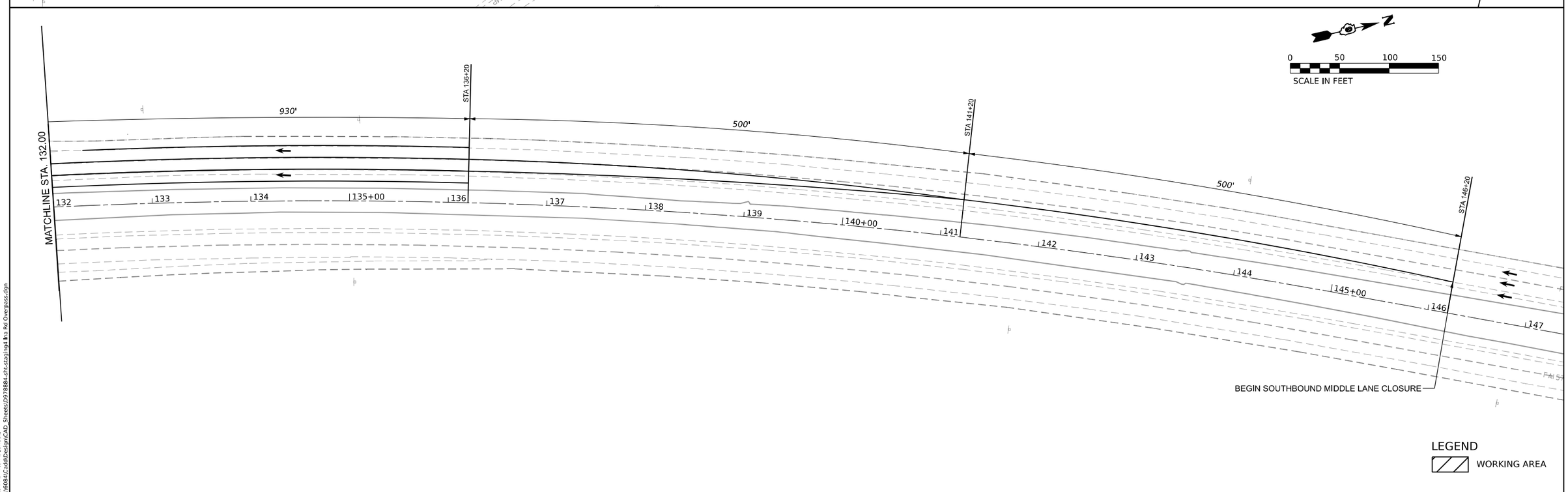

MODEL: I57FRANKLINIa-2 - Plan 1 [Sheet]
FILE NAME: J:\2021\6084\Cadd\Design\CAD_Sheets\D978884-sht-staging4 Ina Rd Overpass.dgn

ABNA DESIGN FIRM REG. 184.002117
745 McClintock Drive
Suite 210
Burr Ridge, IL 60527
Ph. 773-481-4788
Fax: 773-239-3728

USER NAME = muddin	DESIGNED - HH	REVISED -	
	DRAWN - IG	REVISED -	
PLOT SCALE = 0.16666685 ' / in.	CHECKED - HH	REVISED -	
PLOT DATE = 10/11/2024	DATE -	REVISED -	

STATE OF ILLINOIS
DEPARTMENT OF TRANSPORTATION

MAINTENANCE OF TRAFFIC
STAGE 4 INA ROAD

SCALE: 1:50 | SHEET 10 OF 10 SHEETS | STA. | TO STA.

F.A.I. RTE.	SECTION	COUNTY	TOTAL SHEETS	SHEET NO.
57	(28-2)B-2; (28-1)B-2	JEFFERSON	598	281
		CONTRACT NO. 78884		
	ILLINOIS	FED. AID PROJECT		

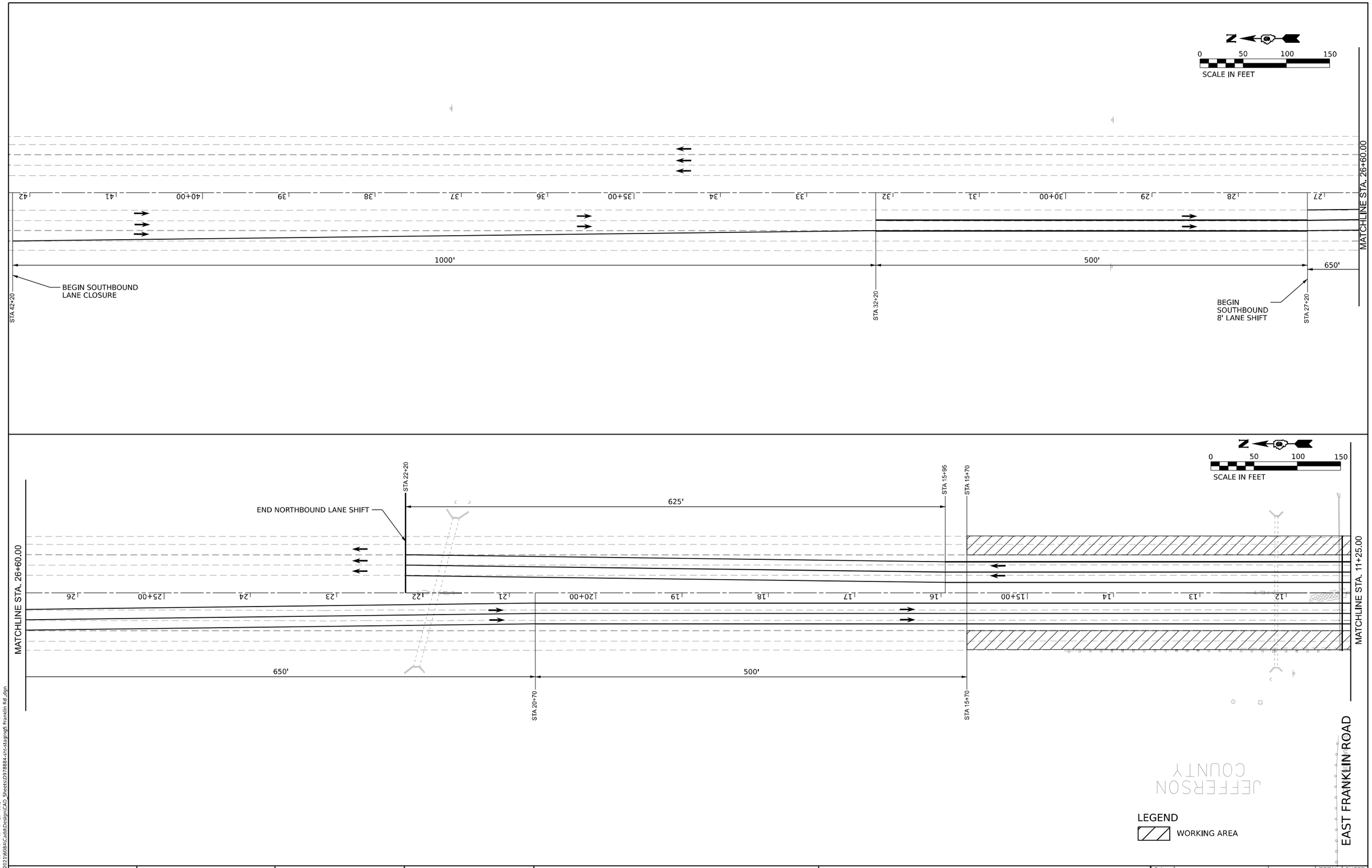

MODEL: I57FRANKLIN4-2 - Plan 1A [Sheet] -
FILE NAME: J:\2021\60834\Cadd\Design\CAD_Sheets\D978884-sht-staging5 Franklin Rd .dgn

ABNA DESIGN FIRM REG. 184.002117
745 McClintock Drive
Suite 210
Burr Ridge, IL 60527
Ph. 773-881-4788
Fax: 773-239-3728

USER NAME = muddin	DESIGNED - HH	REVISED -	
	DRAWN - IG	REVISED -	
PLOT SCALE = 0.16666633 ' / in.	CHECKED - HH	REVISED -	
PLOT DATE = 10/11/2024	DATE -	REVISED -	

STATE OF ILLINOIS
DEPARTMENT OF TRANSPORTATION

MAINTENANCE OF TRAFFIC
STAGE 5 E. FRANKLIN ROAD

SCALE: 1:50 | SHEET 1 OF 10 SHEETS | STA. TO STA.

F.A. RTE.	SECTION	COUNTY	TOTAL SHEETS	SHEET NO.
57	(28-2)B-2; (28-1)B-2	VARIOUS	598	282
		CONTRACT NO. 78884		
	ILLINOIS	FED. AID PROJECT		

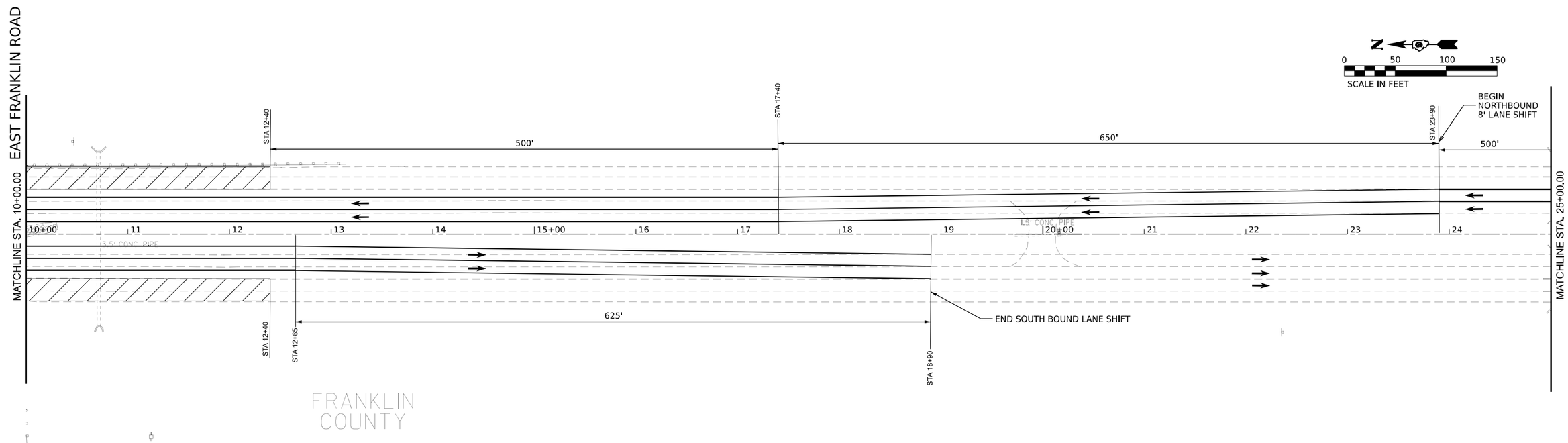

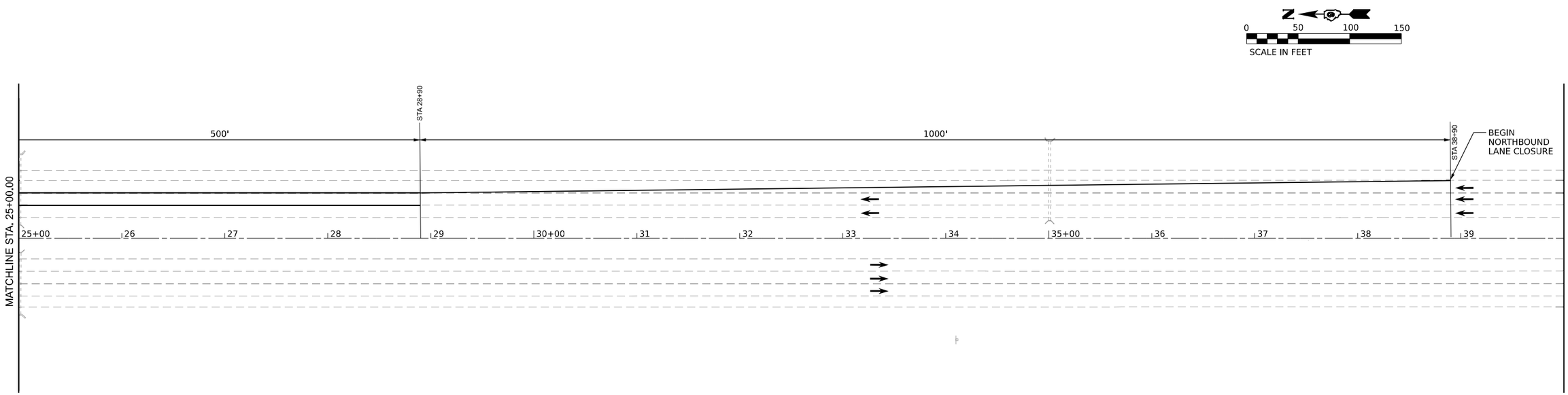

LEGEND

WORKING AREA

MODEL: I57FRANKLINk-2 - Plan 1 [Sheet]
FILE NAME: J:\2021\6084\CaddDesign\CAD Sheets\D978884-sht-staging5 Franklin Rd.dgn

ABNA DESIGN FIRM REG. 184.002117
745 McClintock Drive
Suite 210
Burr Ridge, IL 60527
Ph. 773-881-4788
Fax: 773-239-3728

USER NAME = muddin	DESIGNED - HH	REVISED -	
	DRAWN - IG	REVISED -	
PLOT SCALE = 0.16666600 ' / in.	CHECKED - HH	REVISED -	
PLOT DATE = 10/11/2024	DATE -	REVISED -	

STATE OF ILLINOIS
DEPARTMENT OF TRANSPORTATION

MAINTENANCE OF TRAFFIC
STAGE 5 E. FRANKLIN ROAD

SCALE: 1:50 | SHEET 2 OF 10 SHEETS | STA. TO STA.

F.A. RTE.	SECTION	COUNTY	TOTAL SHEETS	SHEET NO.
57	(28-2)B-2; (28-1)B-2	VARIOUS	598	283
		CONTRACT NO. 78884		
		ILLINOIS	FED. AID PROJECT	

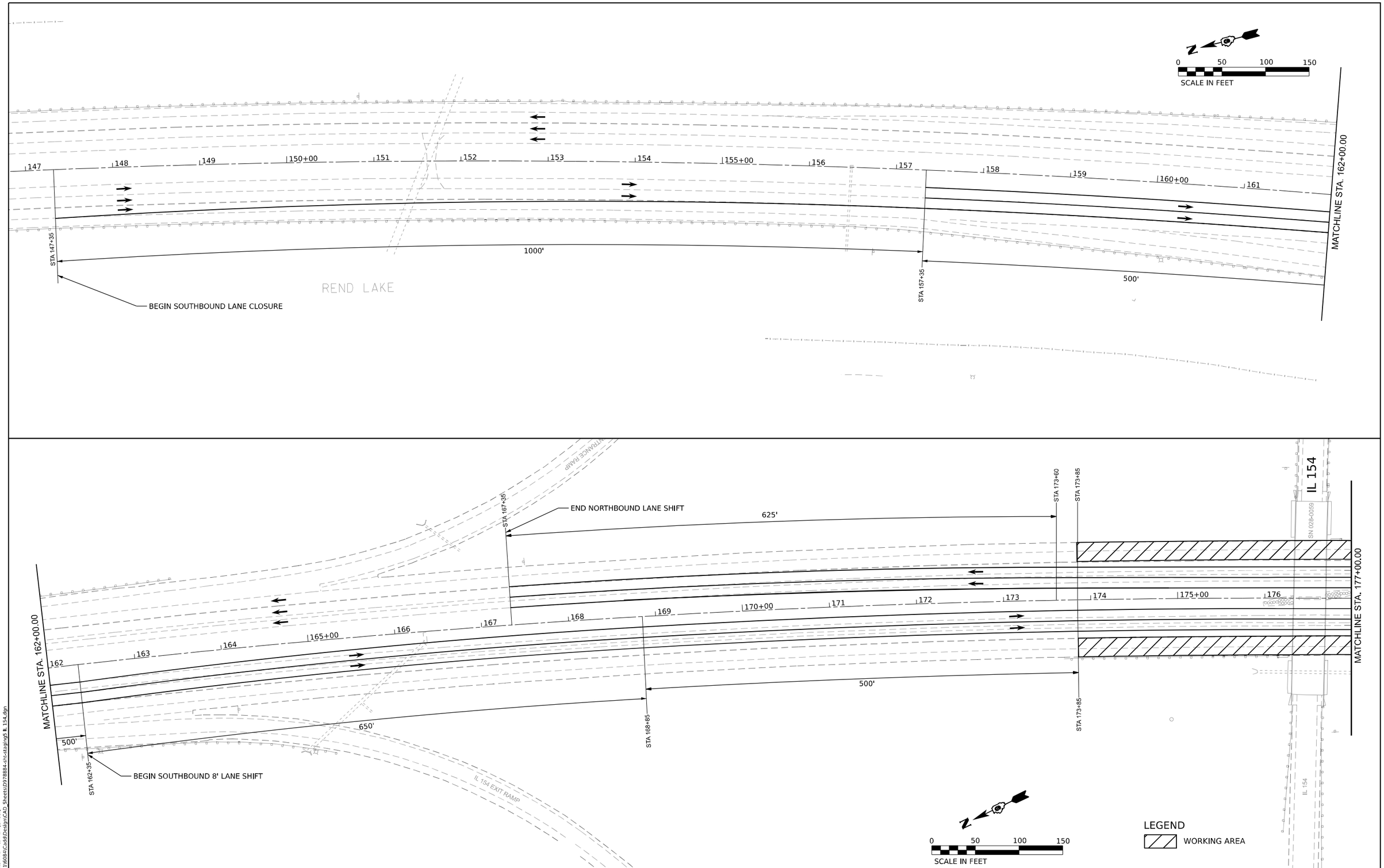

MODEL: I57FRANKLIN4-2 - Plan 1A [Sheet] -
FILE NAME: J:\2021\6084\Cadd\Design\CAD Sheets\D972884-sht-staging5 IL 154.dgn

ABNA DESIGN FIRM REG. 184.002117
745 McClintock Drive
Suite 210
Burr Ridge, IL 60527
Ph: 773-881-4788
Fax: 773-239-3728

USER NAME = muddin	DESIGNED - HH	REVISED -	
	DRAWN - IG	REVISED -	
PLOT SCALE = 0.16666600 ' / in.	CHECKED - HH	REVISED -	
PLOT DATE = 10/11/2024	DATE -	REVISED -	

STATE OF ILLINOIS
DEPARTMENT OF TRANSPORTATION

MAINTENANCE OF TRAFFIC
STAGE 5 ILLINOIS 154

SCALE: 1:50 | SHEET 3 OF 10 SHEETS | STA. TO STA.

F.A. RTE.	SECTION	COUNTY	TOTAL SHEETS	SHEET NO.
57	(28-2)B-2; (28-1)B-2	FRANKLIN	598	284
		CONTRACT NO. 78884		
		ILLINOIS	FED. AID PROJECT	

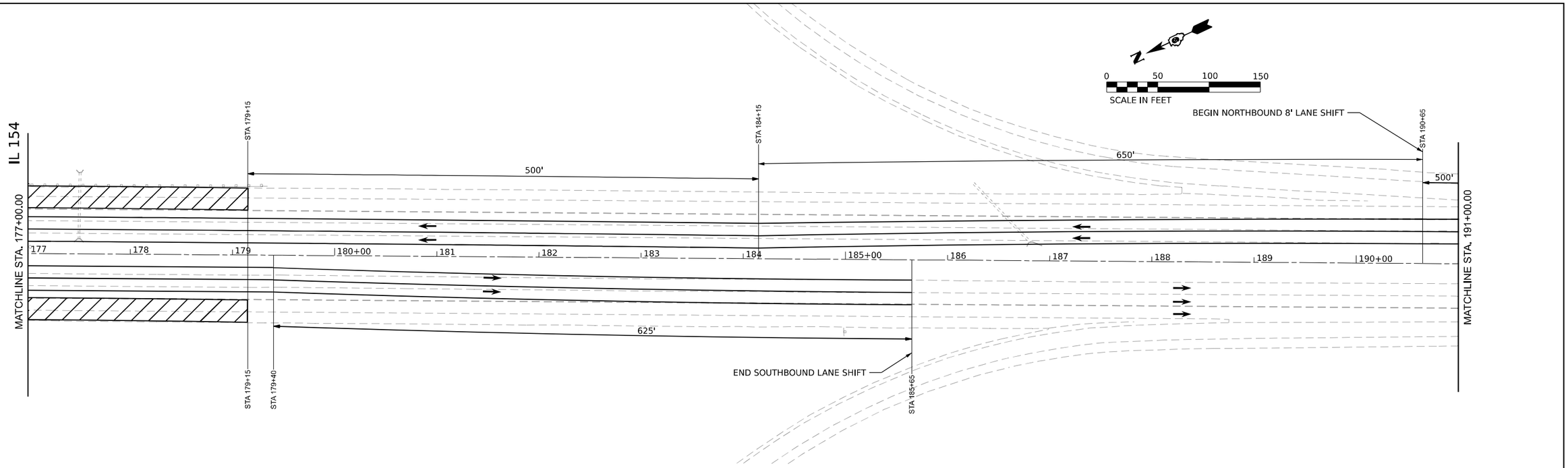

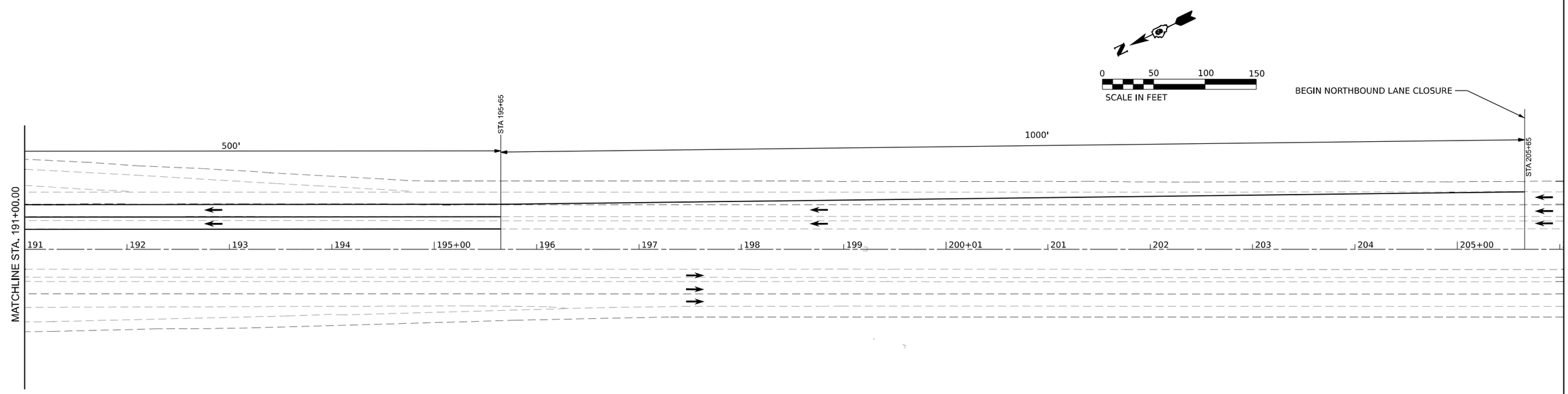

LEGEND

WORKING AREA

MODEL: I57FRANKLIN4-2 - Plan 1 [Sheet]
FILE NAME: J:\2021\60834\Cadd\Design\CAD_Sheets\D978884-sht-staging5 IL 154.dgn

ABNA DESIGN FIRM REG. 184.002117
745 McClintock Drive
Suite 210
Burr Ridge, IL 60527
Ph. 773-881-4788
Fax: 773-239-3728

USER NAME = muddin	DESIGNED - HH	REVISED -	
	DRAWN - IG	REVISED -	
PLOT SCALE = 0.16666600 ' / in.	CHECKED - HH	REVISED -	
PLOT DATE = 10/11/2024	DATE -	REVISED -	

STATE OF ILLINOIS
DEPARTMENT OF TRANSPORTATION

MAINTENANCE OF TRAFFIC
STAGE 5 ILLINOIS 154

SCALE: 1:50 | SHEET 4 OF 10 SHEETS | STA. | TO STA.

F.A. RTE.	SECTION	COUNTY	TOTAL SHEETS	SHEET NO.
57	(28-2)B-2; (28-1)B-2	FRANKLIN	598	285
		CONTRACT NO. 78884		
	ILLINOIS	FED. AID PROJECT		

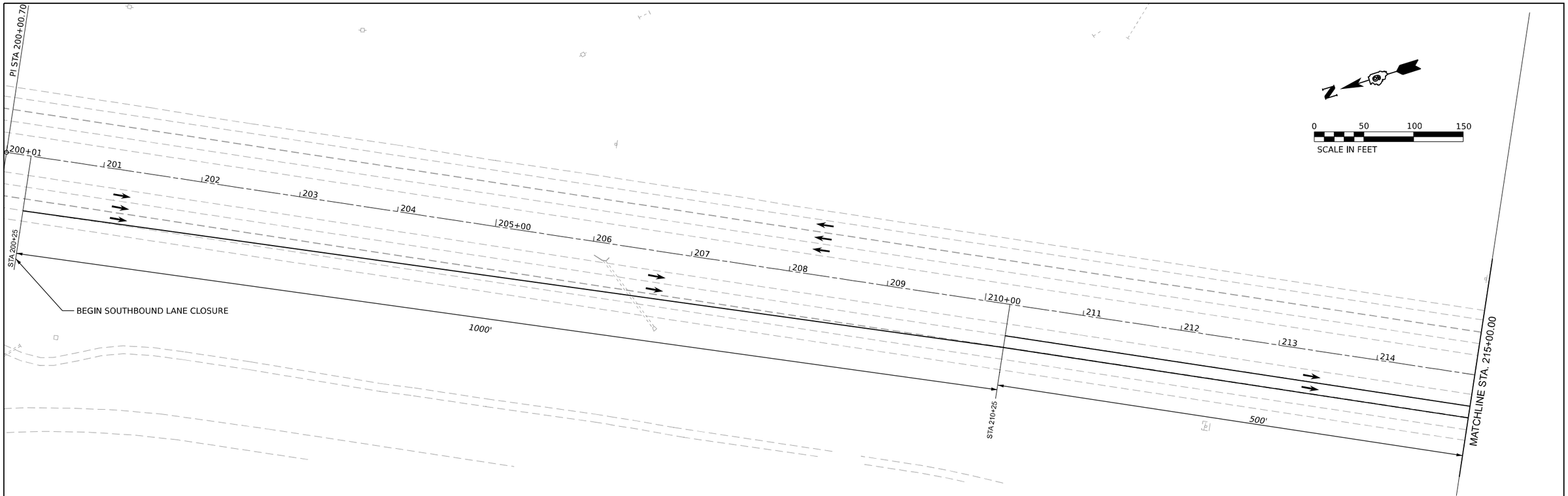

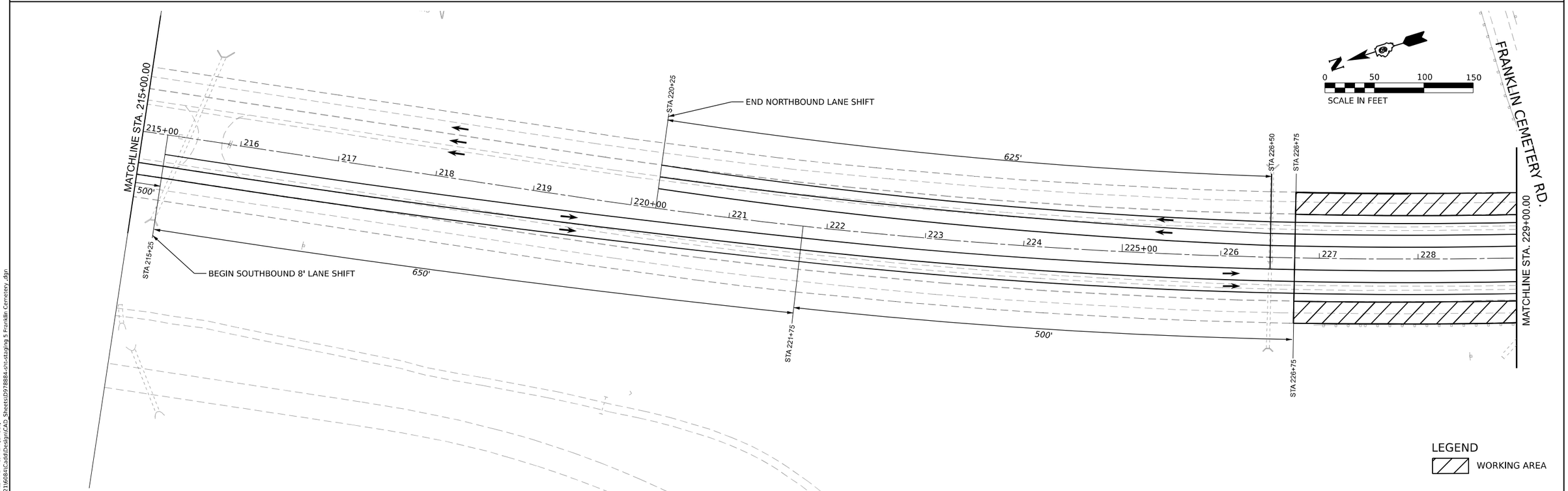

MODEL: I57FRANKLIN4-2 - Plan 1A [Sheet] -
FILE NAME: J:\2021\60834\Cadd\Design\CAD_Sheets\D978884-sht-staging 5 Franklin Cemetery.dgn

ABNA DESIGN FIRM REG. 184.002117
745 McClintock Drive
Suite 210
Burr Ridge, IL 60527
Ph. 773-881-4788
Fax: 773-235-3728

USER NAME = muddin	DESIGNED - HH	REVISED -	
	DRAWN - IG	REVISED -	
PLOT SCALE = 0.166666 ' / in.	CHECKED - HH	REVISED -	
PLOT DATE = 10/11/2024	DATE -	REVISED -	

STATE OF ILLINOIS
DEPARTMENT OF TRANSPORTATION

MAINTENANCE OF TRAFFIC
STAGE 5 FRANKLIN CEMETERY ROAD

SCALE: 1:50 | SHEET 5 OF 10 SHEETS | STA. TO STA.

F.A. RTE.	SECTION	COUNTY	TOTAL SHEETS	SHEET NO.
57	(28-2)B-2; (28-1)B-2	FRANKLIN	598	286
		CONTRACT NO. 78884		
		ILLINOIS	FED. AID PROJECT	

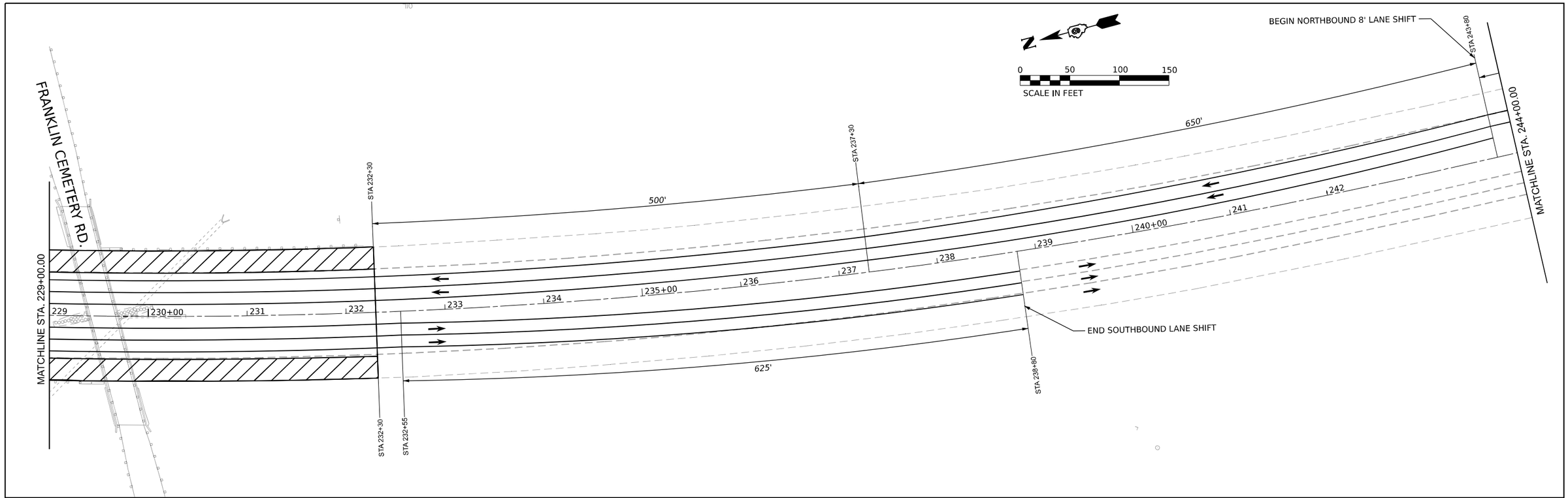

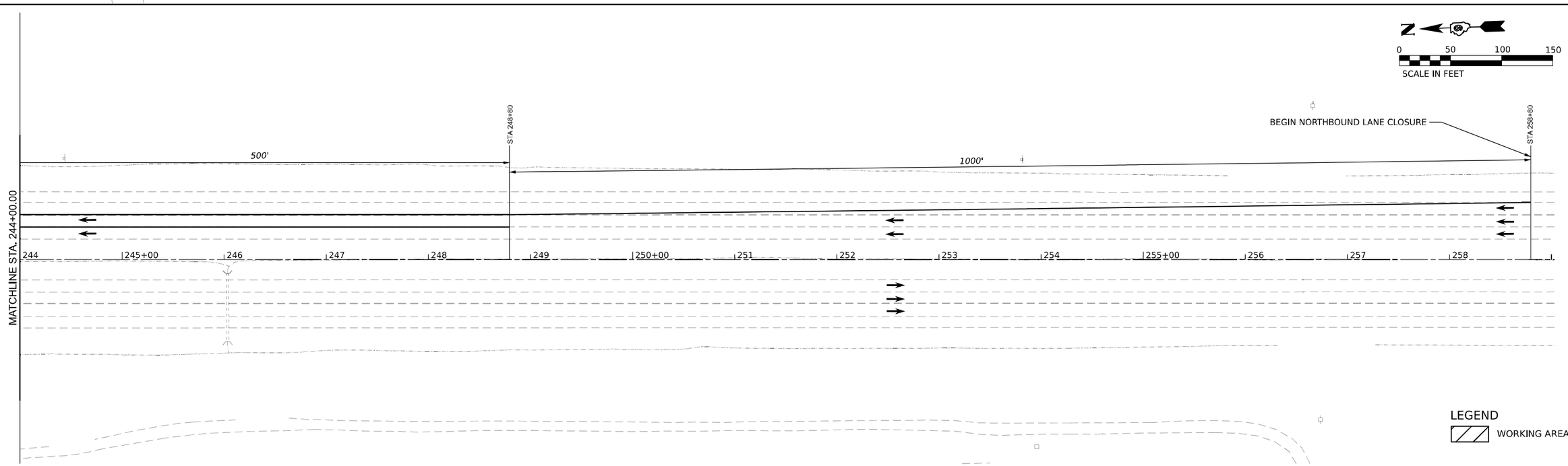

MODEL: I57FRANKLIN\A-2 - Plan 1 [Sheet]
FILE NAME: J:\2021\6084\Cadd\Design\CAD Sheets\D972884-sht-staging 5 Franklin Cemetery .dgn

ABNA DESIGN FIRM REG. 184.002117
745 McClintock Drive
Suite 210
Burr Ridge, IL 60527
Ph: 773-881-4788
Fax: 773-239-3728

USER NAME = muddin	DESIGNED - HH	REVISED -	
	DRAWN - IG	REVISED -	
PLOT SCALE = 0.16666600 ' / in.	CHECKED - HH	REVISED -	
PLOT DATE = 10/11/2024	DATE -	REVISED -	

STATE OF ILLINOIS
DEPARTMENT OF TRANSPORTATION

MAINTENANCE OF TRAFFIC
STAGE 5 FRANKLIN CEMETERY ROAD

SCALE: 1:50 | SHEET 6 OF 10 SHEETS | STA. TO STA.

F.A. RTE.	SECTION	COUNTY	TOTAL SHEETS	SHEET NO.
57	(28-2)B-2; (28-1)B-2	FRANKLIN	598	287
		CONTRACT NO. 78884		
		ILLINOIS	FED. AID PROJECT	

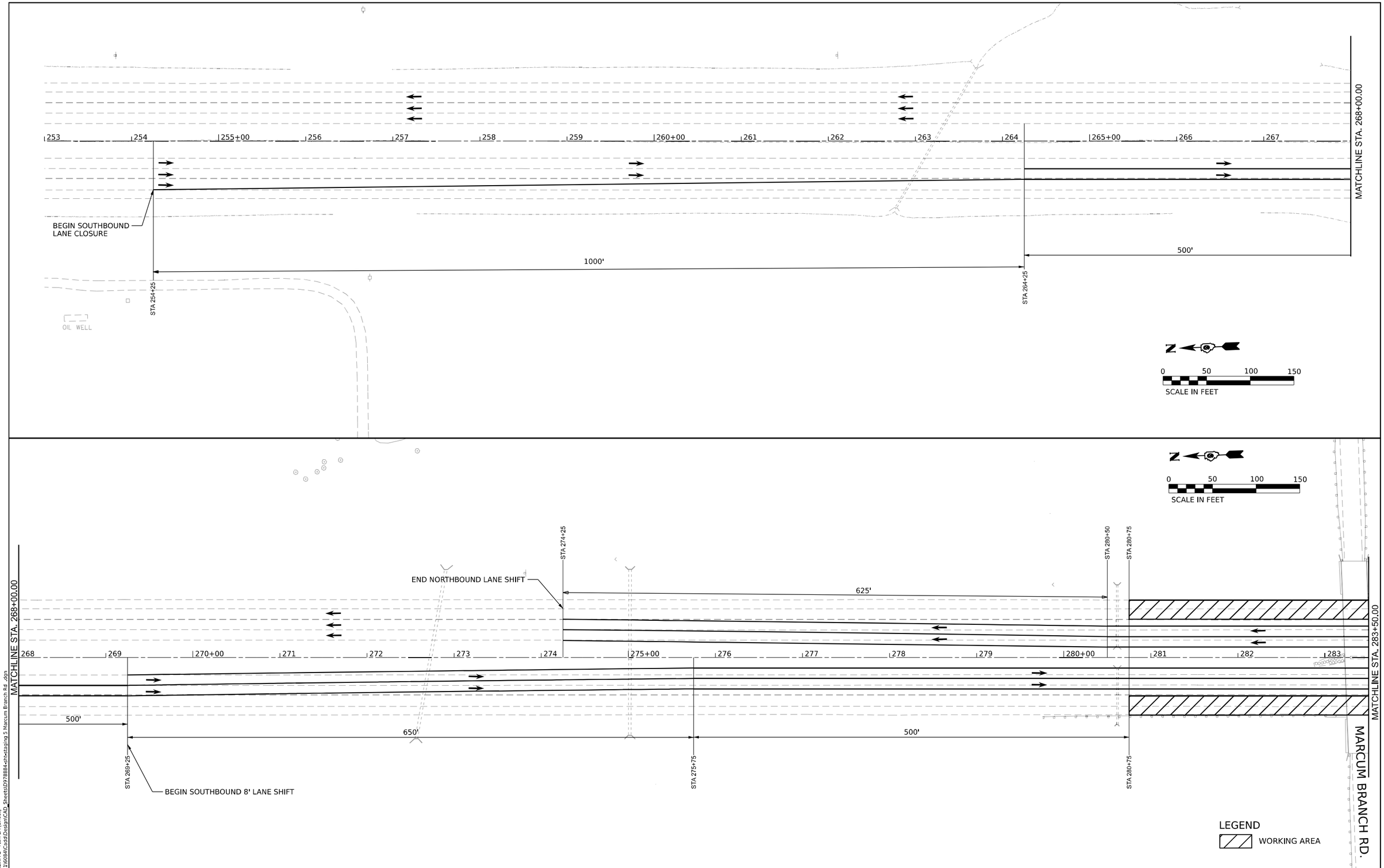

MODEL: I57FRANKLIN4-2 - Plan 1A [Sheet] -
FILE NAME: J:\2021\6084\Cadd\Design\CAD_Sheets\D978884-dh-staging 5 Marcum Branch Rd .dgn

ABNA DESIGN FIRM REG. 184.002117
745 McClintock Drive
Suite 210
Burr Ridge, IL 60527
Ph: 773-681-4799
Fax: 773-239-3728

USER NAME = muddin	DESIGNED - HH	REVISED -	
	DRAWN - IG	REVISED -	
PLOT SCALE = 0.166666 ' / in.	CHECKED - HH	REVISED -	
PLOT DATE = 10/11/2024	DATE -	REVISED -	

STATE OF ILLINOIS
DEPARTMENT OF TRANSPORTATION

MAINTENANCE OF TRAFFIC
STAGE 5 MARCUM BRANCH ROAD

SCALE: 1:50 | SHEET 7 OF 10 SHEETS | STA. TO STA.

F.A.I. RTE.	SECTION	COUNTY	TOTAL SHEETS	SHEET NO.
57	(28-2)B-2; (28-1)B-2	FRANKLIN	598	288
		CONTRACT NO. 78884		
		ILLINOIS	FED. AID PROJECT	

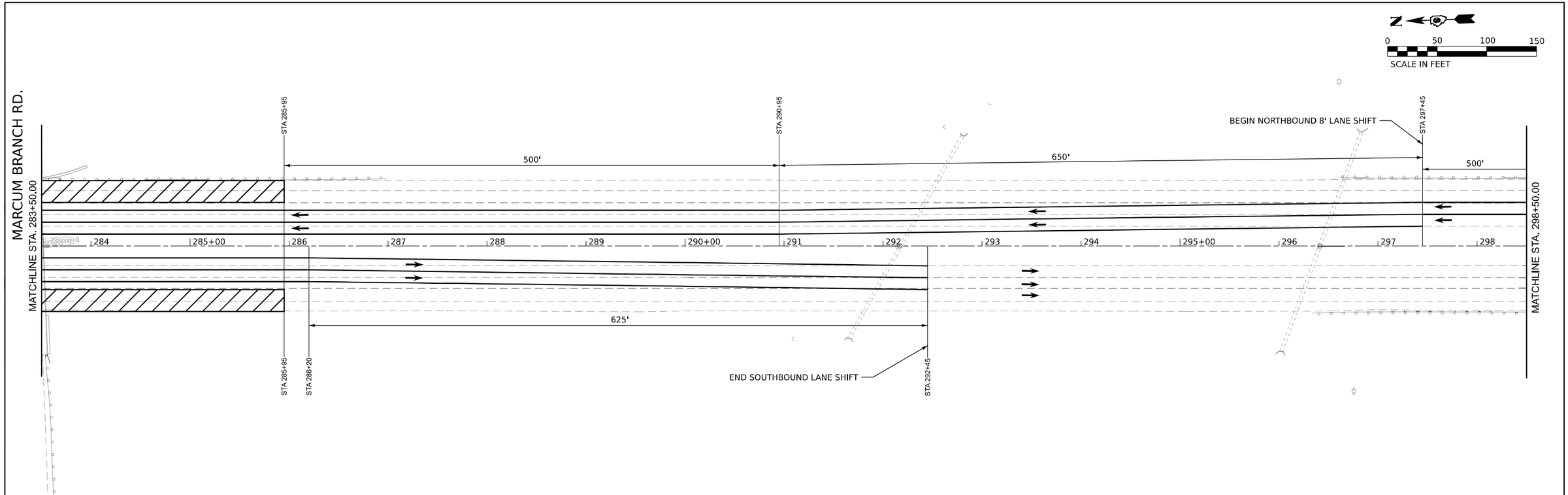

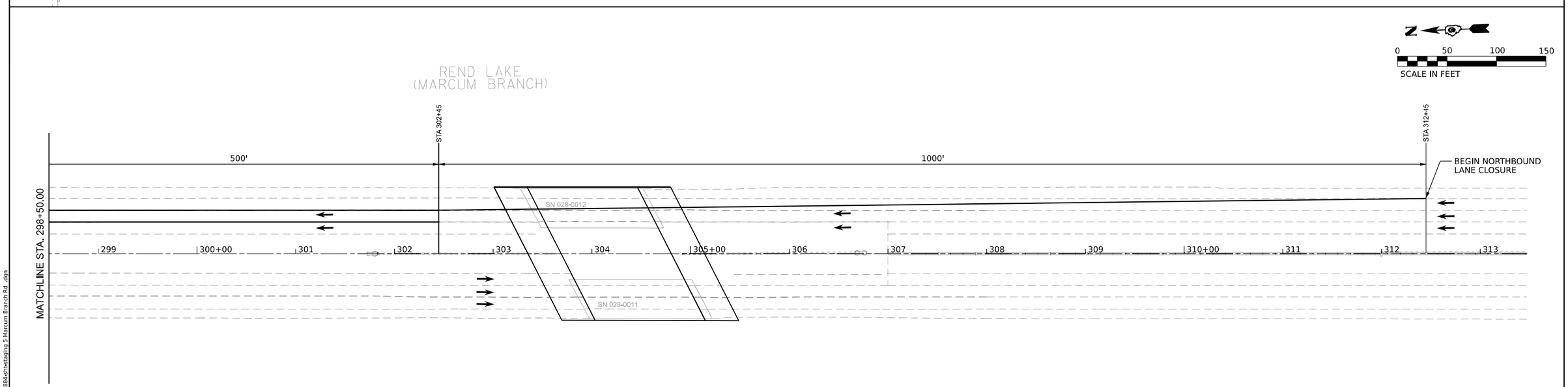

MODEL: I57FRANKLIN-2 - Plan 1 [Sheet]
FILE NAME: I:\2021\60184\Cadd\Design\CAD_Sheets\D978884-sht-staging 5 Marcum Branch Rd .dgn

ABNA DESIGN FIRM REG. 184.002117
745 McClintock Drive
Suite 210
Burr Ridge, IL 60527
Ph. 773-881-4788
Fax: 773-239-5728

USER NAME = muddin	DESIGNED - HH	REVISED -	
	DRAWN - IG	REVISED -	
PLOT SCALE = 0.166666 ' / in.	CHECKED - HH	REVISED -	
PLOT DATE = 10/11/2024	DATE -	REVISED -	

STATE OF ILLINOIS
DEPARTMENT OF TRANSPORTATION

MAINTENANCE OF TRAFFIC
STAGE 5 MARCUM BRANCH ROAD

SCALE: 1:50 | SHEET 8 OF 10 SHEETS | STA. TO STA.

F.A.I. RTE.	SECTION	COUNTY	TOTAL SHEETS	SHEET NO.
57	(28-2)B-2; (28-1)B-2	FRANKLIN	598	289
		CONTRACT NO. 78884		
	ILLINOIS	FED. AID PROJECT		

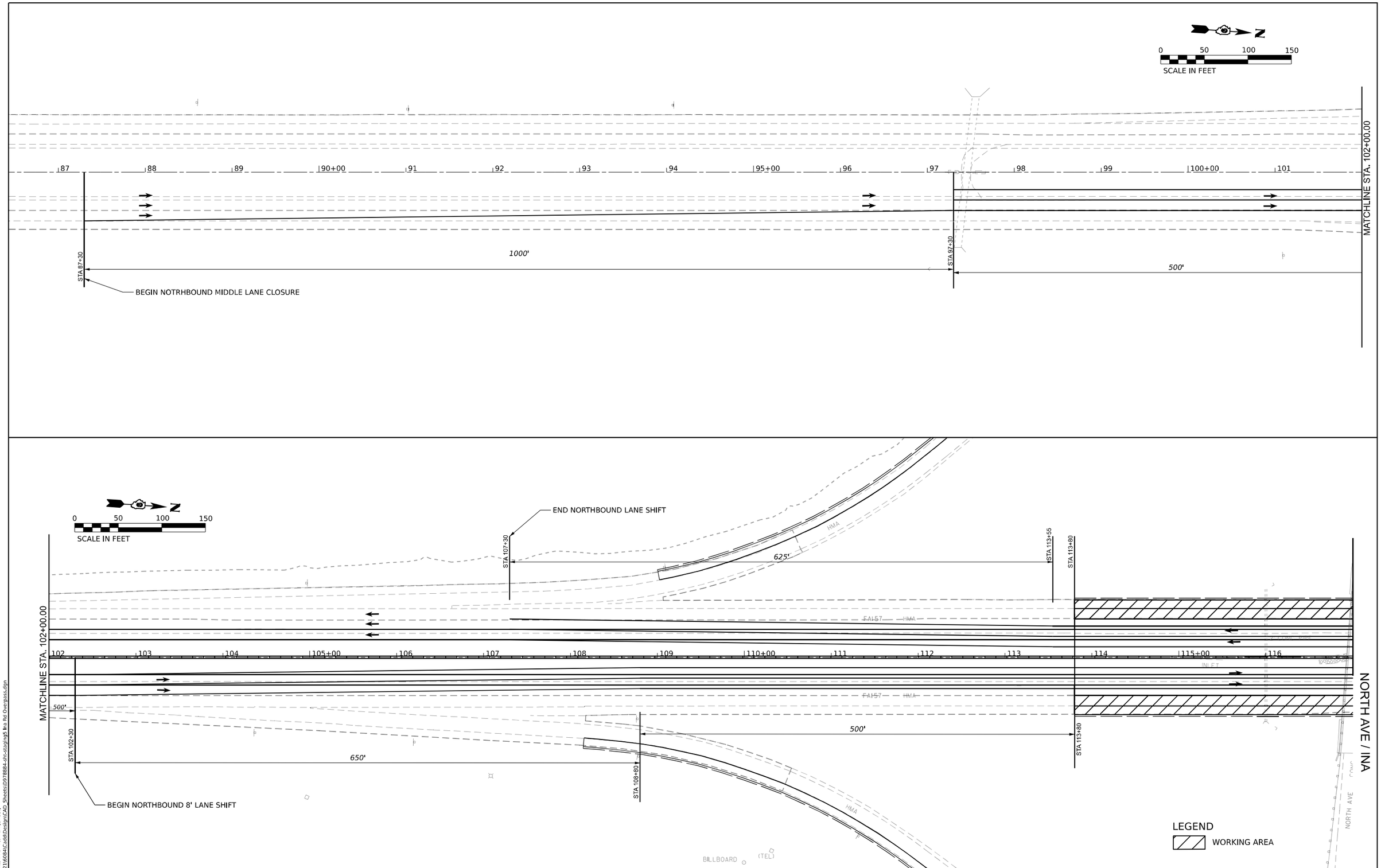

MODEL: I57FRANKLIN1A-2 - Plan 1A [Sheet] -
FILE NAME: J:\2021\60841\Cadd\Design\CAD Sheets\0978884-sht-staging5 Ina Rd Overpass.dgn

ABNA DESIGN FIRM REG. 184.002117
745 McClintock Drive
Suite 210
Burr Ridge, IL 60527
Ph. 773-881-4788
Fax: 773-239-3728

USER NAME = muddin	DESIGNED - HH	REVISED -	
	DRAWN - IG	REVISED -	
PLOT SCALE = 0.16666685 ' / in.	CHECKED - HH	REVISED -	
PLOT DATE = 10/11/2024	DATE -	REVISED -	

STATE OF ILLINOIS
DEPARTMENT OF TRANSPORTATION

MAINTENANCE OF TRAFFIC
STAGE 5 INA ROAD

SCALE: 1:50 | SHEET 9 OF 10 SHEETS | STA. TO STA.

F.A.I. RTE.	SECTION	COUNTY	TOTAL SHEETS	SHEET NO.
57	(28-2)B-2; (28-1)B-2	JEFFERSON	598	290
		CONTRACT NO. 78884		
		ILLINOIS	FED. AID PROJECT	

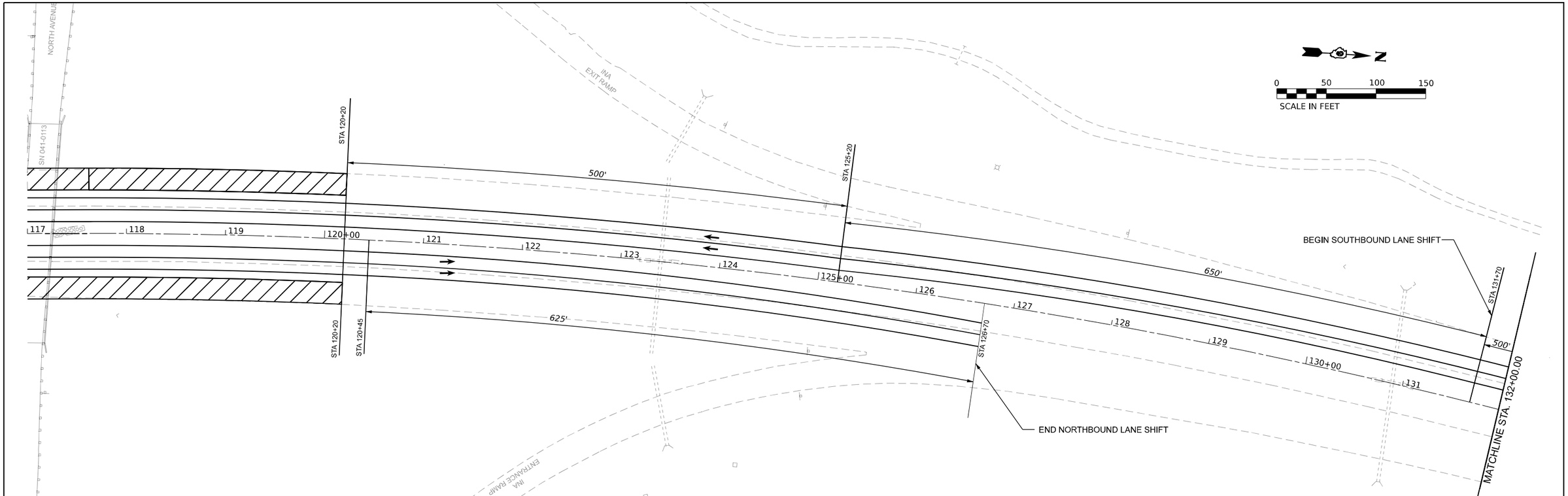

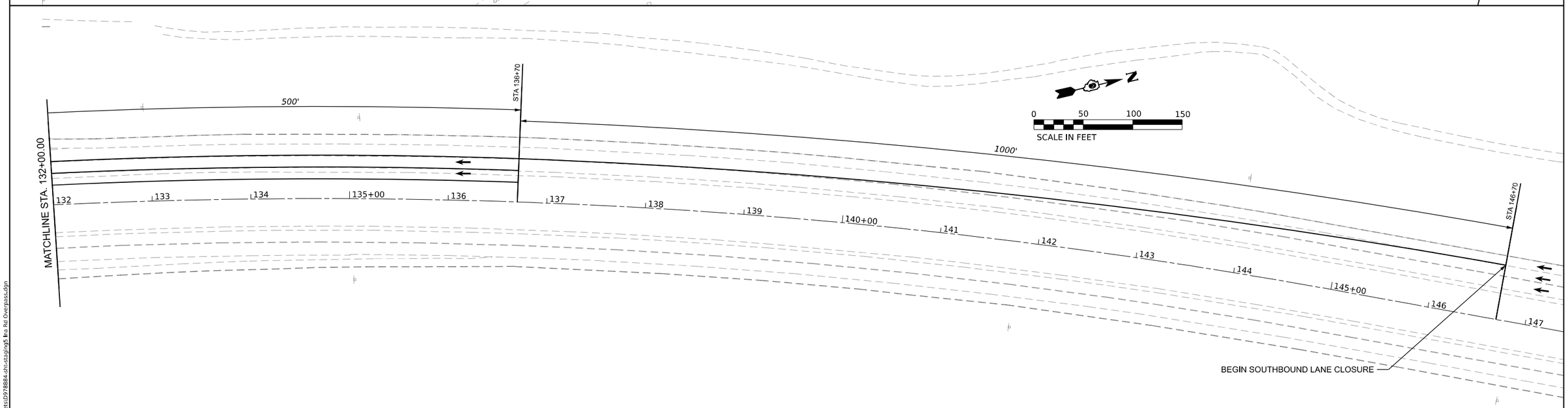

LEGEND

WORKING AREA

MODEL: I57FRANKLINA-2 - Plan 1 [Sheet]
FILE NAME: I:\2021160B4\Cadd\Design\CAD_Sheets\D978884-sht-staging5 Ina Rd Overpass.dgn

ABNA DESIGN FIRM REG. 184.002117
745 McClintock Drive
Suite 210
Burr Ridge, IL 60527
Ph. 773-881-4788
Fax: 773-239-3728

USER NAME = muddin	DESIGNED - HH	REVISED -	
	DRAWN - IG	REVISED -	
PLOT SCALE = 0.16666685 ' / in.	CHECKED - HH	REVISED -	
PLOT DATE = 10/11/2024	DATE -	REVISED -	

STATE OF ILLINOIS
DEPARTMENT OF TRANSPORTATION

MAINTENANCE OF TRAFFIC
STAGE 5 INA ROAD

SCALE: 1:50 | SHEET 10 OF 10 SHEETS | STA. | TO STA.

F.A.I. RTE.	SECTION	COUNTY	TOTAL SHEETS	SHEET NO.
57	(28-2)B-2; (28-1)B-2	JEFFERSON	598	291
		CONTRACT NO. 78884		
	ILLINOIS	FED. AID PROJECT		

STAGING WITH LANE SHIFT ONLY

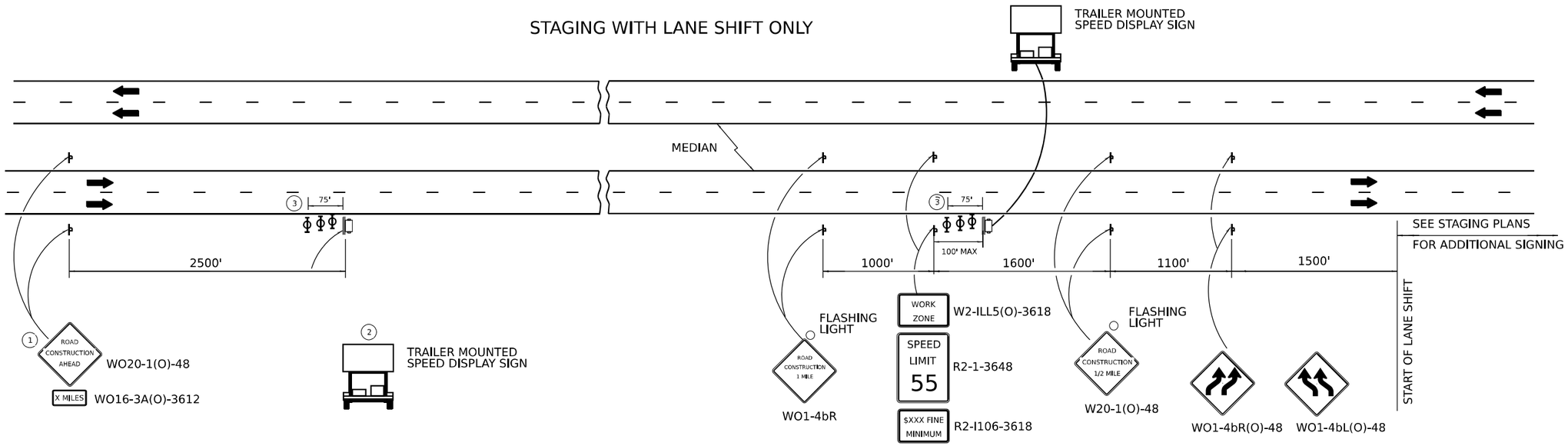

STAGING WITH LANE DROP AND SHIFT

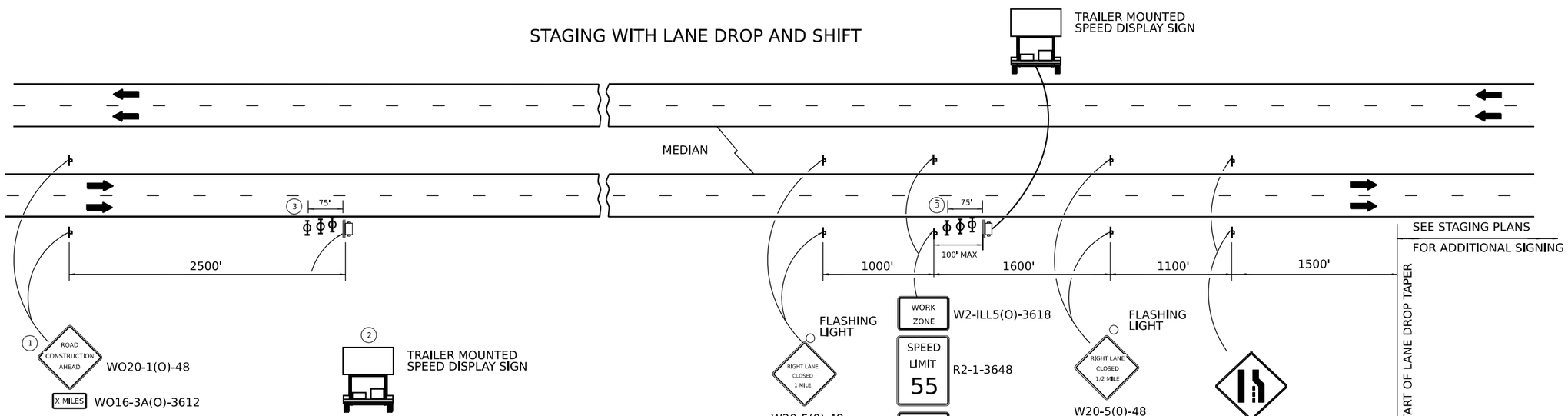

NOTES

1. THE ROAD CONSTRUCTION AHEAD SIGN SHALL BE LOCATED 3 TO 5 MILES IN ADVANCE OF THE PROJECT LIMITS.
2. THE MESSAGE BOARD SHALL BE USED TO DISPLAY STATUS OF LANES WITHIN THE PROJECT. THE PRIMARY MESSAGES SHAL BE:
   "LANE SHIFT"
   "X MILES AHEAD"
   "ALL LANES OPEN"
3. THIS WORK WILL BE PAID FOR AS TRAFFIC CONTROL AND PROTECTION, (SPECIAL).

SYMBOLS

- TRAILER MOUNTED SIGN
- SIGN
- TYPE II BARRICADE, DRUM, OR VERTICAL BARRICADE WITH MONODIRECTIONAL FLASHING LIGHT

ABNA DESIGN FIRM REG. 184.002117
745 McClintock Drive
Suite 210
Burr Ridge, IL 60527
Ph. 773-681-4788
Fax: 773-239-3728

USER NAME = muddin	DESIGNED - HH	REVISED -	
	DRAWN - IG	REVISED -	
PLOT SCALE = 0.16660000 ' / in.	CHECKED - HH	REVISED -	
PLOT DATE = 10/11/2024	DATE -	REVISED -	

STATE OF ILLINOIS
DEPARTMENT OF TRANSPORTATION

MAINTENANCE OF TRAFFIC DETAILS

SCALE: NTS | SHEET 1 OF 1 SHEETS | STA. TO STA.

F.A. I RTE.	SECTION	COUNTY	TOTAL SHEETS	SHEET NO.
57	(28-2)B-2; (28-1)B-2	FRANKLIN / JEFFERSON	598	292

CONTRACT NO. 78884

ILLINOIS | FED. AID PROJECT

MODEL: MOT Special - [Sheet] - Special
FILE NAME: J:\2021\6084\Cadd\Design\CAD_Sheets\D978884-sht-staging-typ&call-genote.dgn

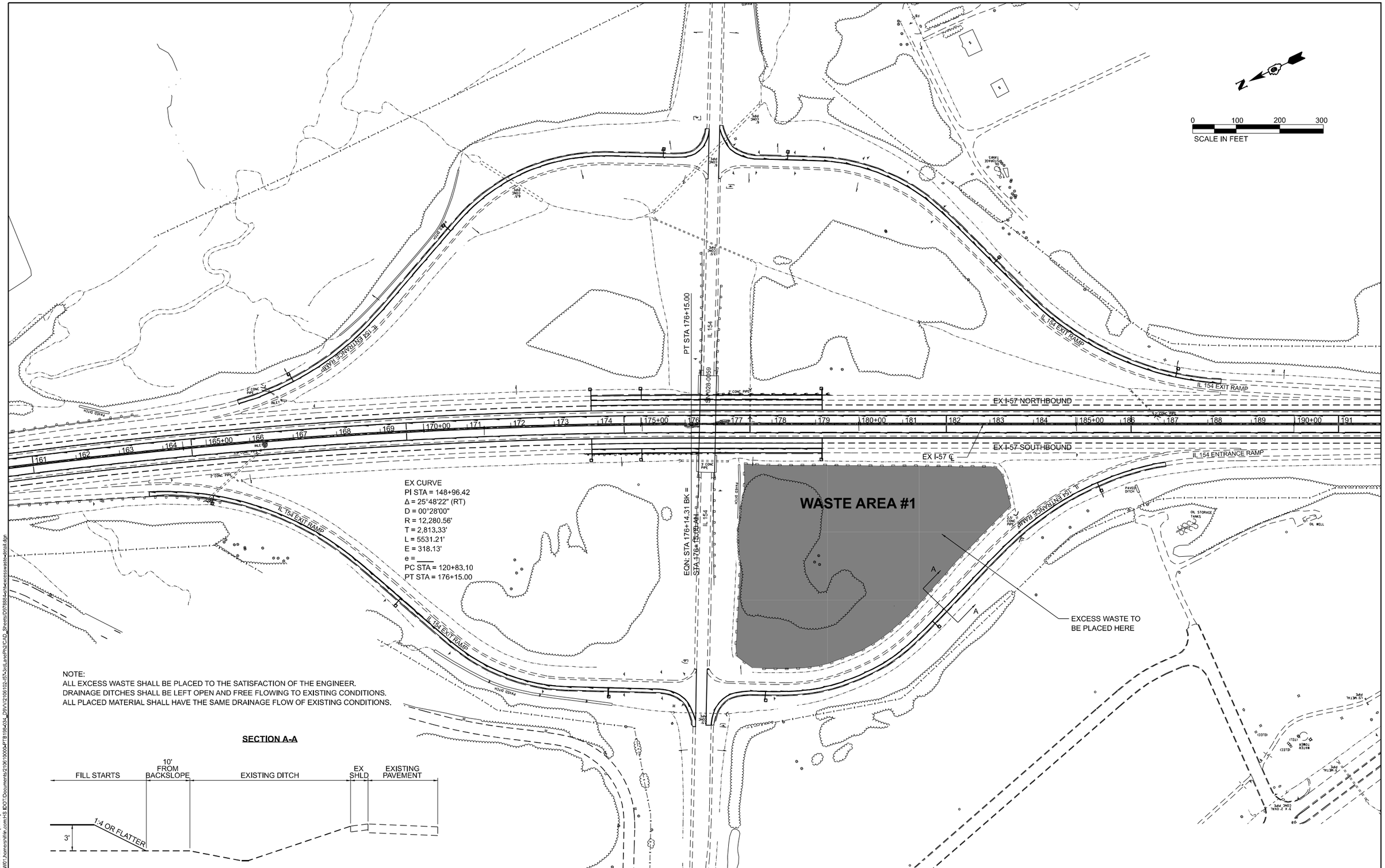

MODEL: ExcessWasteDetail - Plan 1 [Sheet]
FILE NAME: pw://PW01-hornershifrin.com-IS DOT/Documents/21061000/PTB189-034_D2/V/21061000-PTB189-034_D2-IL154-57-3rdLanePh2/CAD_Sheets/0978884-sht-excesswaste-detail.dgn

HORNER SHIFRIN WWW.HORNERSHIFRIN.COM	USER NAME = jahaas	DESIGNED -	REVISED -	STATE OF ILLINOIS DEPARTMENT OF TRANSPORTATION	EXCESS WASTE LOCATION FRANKLIN COUNTY	F.A.I RTE.	SECTION	COUNTY	TOTAL SHEETS	SHEET NO.
		DRAWN -	REVISED -			57	(28-2)B-2; (28-1)B-2	*	598	293
	PLOT SCALE = 0.16666633 ' / in.	CHECKED -	REVISED -					CONTRACT NO. 78884		
	PLOT DATE = 10/14/2024	DATE -	REVISED -		SCALE:1" = 100' SHEET 1 OF 6 SHEETS STA. TO STA.		ILLINOIS	FED. AID PROJECT		

* FRANKLIN/JEFFERSON

TYPICAL DRAINAGE STRUCTURE MARKER DETAIL

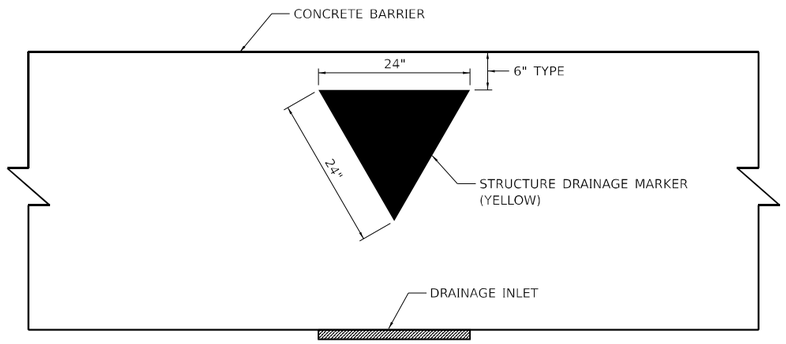

NOTES:
TO BE PAID FOR AS POLYUREA PAVEMENT MARKING LETTERS AND SYMBOLS (USE 2 SQ FT FOR EACH)

TYPICAL UNDERDRAIN OUTLET MARKER DETAIL

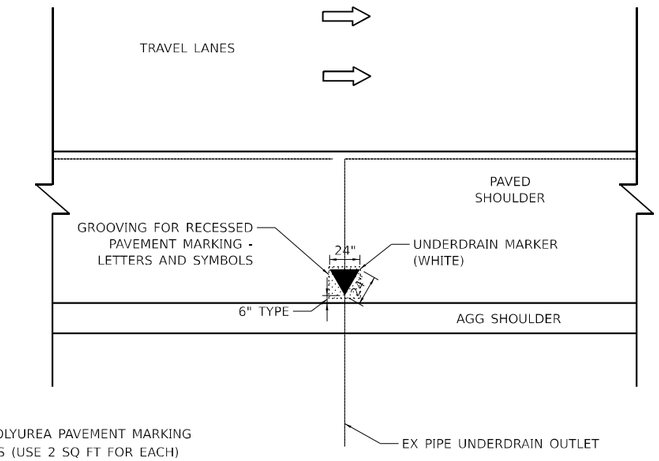

NOTES:
TO BE PAID FOR AS POLYUREA PAVEMENT MARKING LETTERS AND SYMBOLS (USE 2 SQ FT FOR EACH)

GROOVING FOR RECESSED PAVEMENT MARKING-
LETTERS & SYMBOLS MEASURED AS 25" X 25"

CENTERLINE RUMBLE STRIP DETAIL

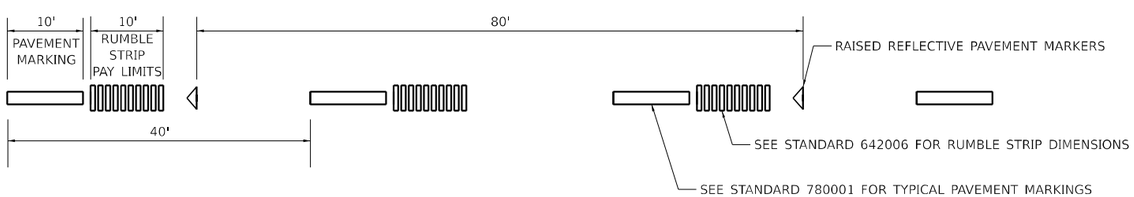

DRAWN	01-08-19
REVISED	10-21-21
REVISED	05-26-22
REVISED	06-30-23

STD. 9-17

SEEDING & MULCHING

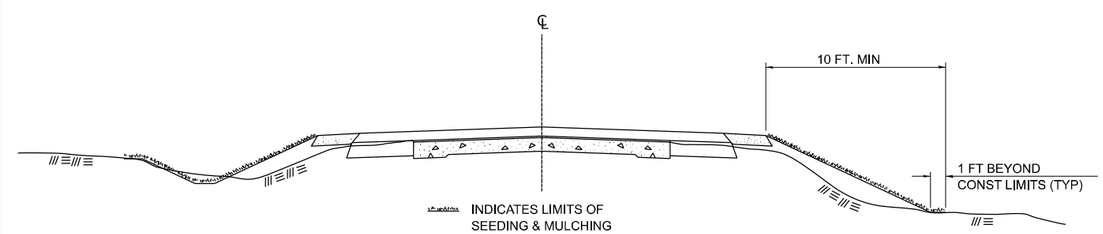

GENERAL NOTES

IN GENERAL, ALL EARTH SURFACES DISTURBED DURING CONSTRUCTION OPERATIONS SHALL BE SEEDED AND MULCHED UPON COMPLETION OF ALL GRADING OPERATIONS.

ON DETOUR ROADS, SLOPES SHALL BE SEEDED IMMEDIATELY UPON COMPLETION OF ANY GIVEN STAGE GRADING. TEMPORARY SEEDING SHALL BE CLASS 7.

FERTILIZER NUTRIENTS SHALL BE APPLIED TO ALL SEEDED AREAS.
LIMESTONE SHALL BE APPLIED TO ALL AREAS OF FINAL SEEDING.

THE RATES OF APPLICATION OF FERTILIZER, MULCH AND LIMESTONE SHALL BE AS SPECIFIED IN THE SPECIAL PROVISIONS FOR ROAD AND BRIDGE CONSTRUCTION.

SECTIONS 250 AND 251 SHALL GOVERN THIS WORK EXCEPT AS SPECIFIED HEREIN OR AS NOTED IN THE SPECIAL PROVISIONS.

DRAWN	02-15-89
REVISED	03-27-08
REVISED	10-21-21
REVISED	05-27-22

STD. 9-19

TEMPORARY HOT–MIX ASPHALT TRANSITIONS

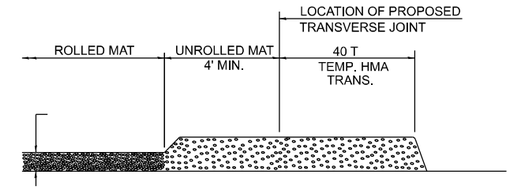

STEP I

1. PLACE HOT-MIX ASPHALT MAT, LENGTH 40 TIMES THE THICKNESS OF THE MAT BEING PLACED PAST THE PROPOSED TRANSVERSE JOINT LOCATION USING NORMAL OPERATING PROCEDURES.
2. EXTREME CARE SHOULD BE TAKEN TO MAINTAIN ENOUGH MATERIAL IN FRONT OF THE SCREED TO MAINTAIN REQUIRED PAVING DEPTH.

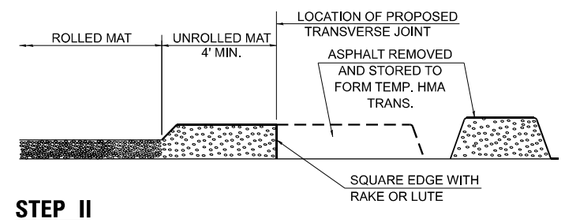

STEP II

1. MOVE THE PAVER OUT OF THE WAY AND REMOVE THE ASPHALT FROM THE AREA OF THE PROPOSED TEMPORARY HOT-MIX ASPHALT TRANSITION.
2. SQUARE UP THE END OF THE MAT WITH A RAKE OR LUTE.
3. NOTE THAT THE MAT WITHIN 4' OF THE END OF JOINT IS NOT TO BE ROLLED AT THIS TIME.

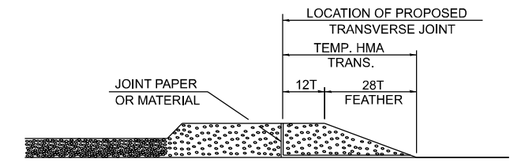

STEP III

1. JOINT PAPER OR OTHER PRESELECTED JOINT MATERIAL IS THEN PLACED IN THE CLEARED AREA AND THE EXCESS ASPHALT USED TO HAND FORM A TRANSITION TO THE DIMENSIONS SHOWN ABOVE.
2. NOTE THAT IN CONSTRUCTING THE TRANSITION, THE MAT DEPTH IS CONTINUED AS PART OF THE TRANSITION BEFORE FORMING THE FEATHER.

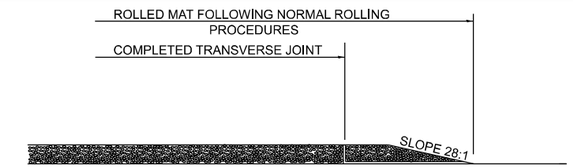

STEP IV

1. COMPLETE TEMPORARY TRANSITION BY ROLLING.
2. TO RESUME PAVING, AT THE JOINT, REMOVE TEMPORARY TRANSITION AND DISPOSE OF THE MATERIAL ACCORDING TO ART. 202.03 OF THE STD. SPECS. (COST INCLUDED IN THE CONTRACT).
3. CONSTRUCTING THE TEMPORARY TRANSITIONS WILL NOT BE PAID FOR SEPARATELY IN ACCORDANCE WITH ARTICLE 406.14 OF THE STANDARD SPECIFICATIONS.

DRAWN	02-15-89
REVISED	01-09-07
REVISED	10-21-21
REVISED	05-26-22

STD. 9-18

JOINT DETAIL OF CONCRETE PAVEMENT
ALTERNATE B

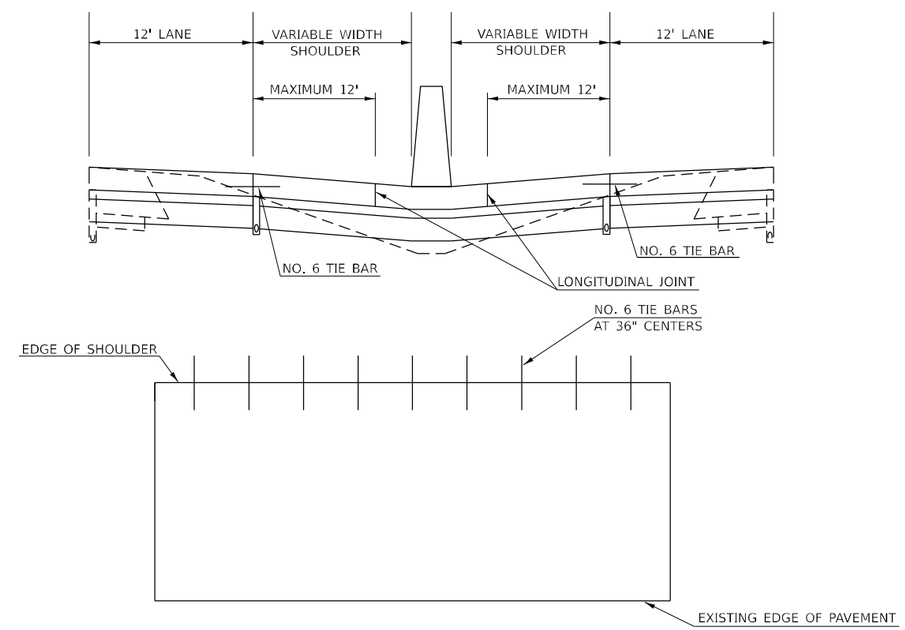

MODEL: District Details - 2
FILE NAME: pw://PW01-homershifrin.com:IS DOT/Documents/21061000\PTB 198-034_D9\V2106102-57-3rdLanePh2/CAD_Sheets/D978884-sht-details.dgn

HORNER SHIFRIN
WWW.HORNERSHIFRIN.COM

USER NAME = jahaas	DESIGNED -	REVISED -	
	DRAWN -	REVISED -	
PLOT SCALE = 0.16666633 ' / in.	CHECKED -	REVISED -	
PLOT DATE = 10/14/2024	DATE -	REVISED -	

STATE OF ILLINOIS
DEPARTMENT OF TRANSPORTATION

DISTRICT DETAILS

SCALE: NTS | SHEET 3 OF 6 SHEETS | STA. TO STA.

F.A. I RTE.	SECTION	COUNTY	TOTAL SHEETS	SHEET NO.
57	(28-2)B-2; (28-1)B-2	*	598	295

CONTRACT NO. 78884

ILLINOIS | FED. AID PROJECT

* FRANKLIN/JEFFERSON

CONCRETE BARRIER (TYP.)

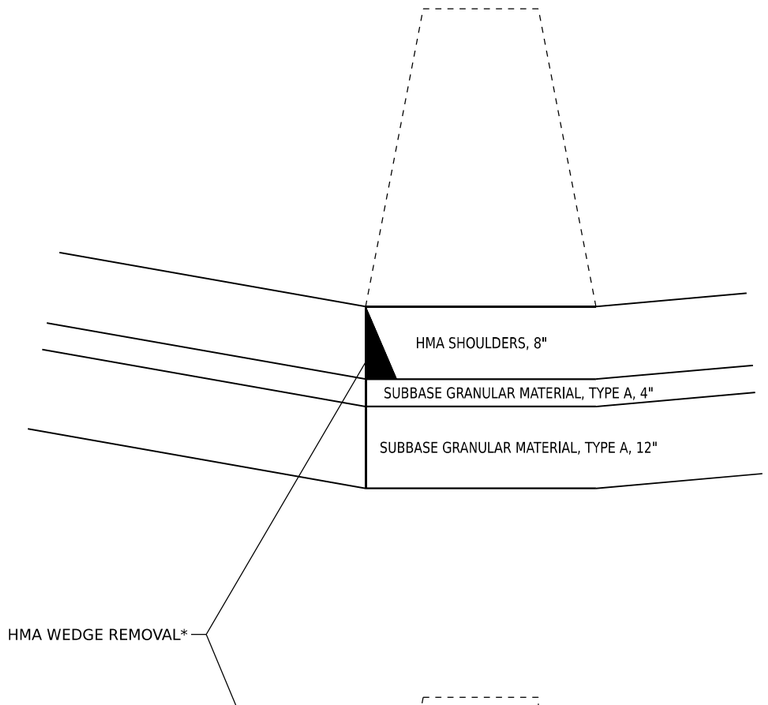

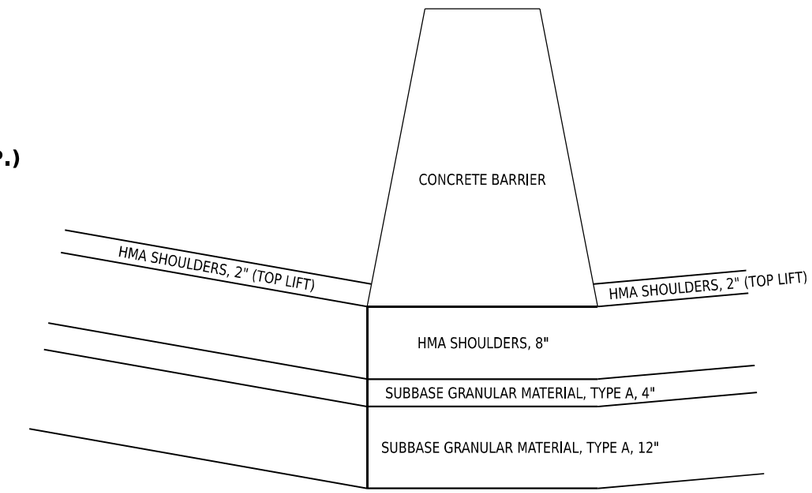

CONCRETE BARRIER, VAR. CROSS SECTION

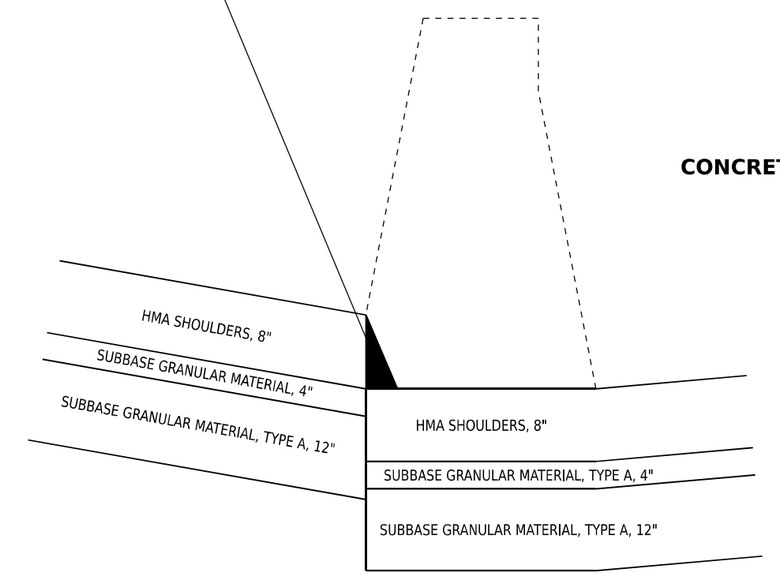

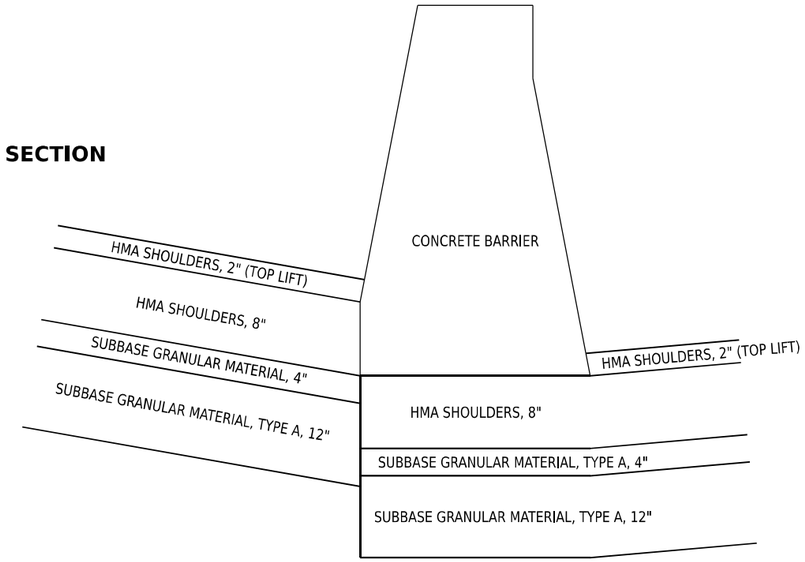

* SEE SPECIAL PROVISION

MODEL: Barrier Wedge Removal
FILE NAME: pw://PW01-hornershifrin.com:HSIDOT/Documents/2106100004PTB198-034_29IV/2106102-057-2nd_Ins/Ph2/CAD_Sheets/D97888-4-thl-details.dgn

HORNER SHIFRIN
WWW. HORNERSHIFRIN .COM

USER NAME = jahaas	DESIGNED -	REVISED -	
	DRAWN -	REVISED -	
PLOT SCALE = 0.16666633 ' / in.	CHECKED -	REVISED -	
PLOT DATE = 10/14/2024	DATE -	REVISED -	

STATE OF ILLINOIS
DEPARTMENT OF TRANSPORTATION

CONCRETE BARRIER
HMA WEDGE REMOVAL - DETAIL

SCALE: NTS | SHEET 4 OF 6 SHEETS | STA. TO STA.

F.A. I RTE.	SECTION	COUNTY	TOTAL SHEETS	SHEET NO.
57	(28-2)B-2; (28-1)B-2	*	598	296

CONTRACT NO. 78884

ILLINOIS | FED. AID PROJECT

* FRANKLIN/JEFFERSON

DETAIL OF CONCRETE FILL FOR DRAINAGE STRUCTURE TYPE 5 WITH TYPE 22 FRAME AND GRATE

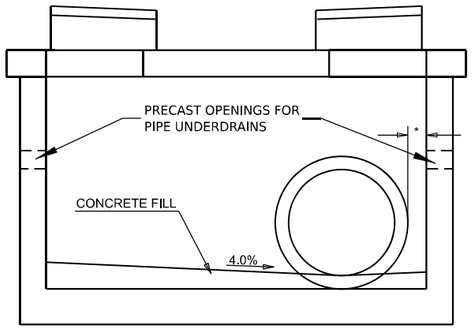

SECTION PERPENDICULAR TO PIPE

DETAIL OF DRAINAGE STRUCTURE TYPE 5, WITH TWO TYPE 22 FRAME AND GRATES (SPECIAL)

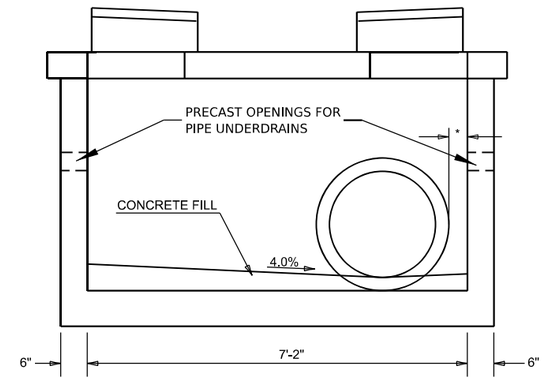

SIDE ELEVATION

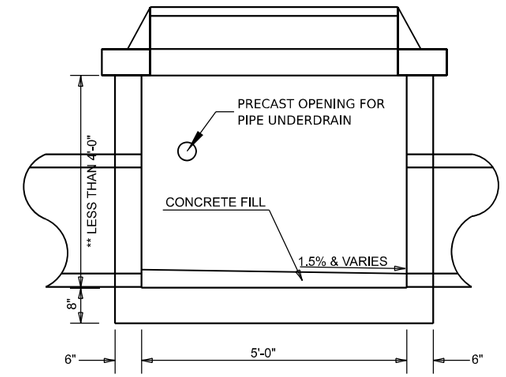

FRONT ELEVATION

* PIPE MINIMUM 2" FROM INSIDE EDGE OF DRAINAGE STRUCTURE
DISTANCE IS NOT REFLECTED IN ELECTRONIC MODEL

**CONSTRUCT ACCORDING TO STANDARD 602106 EXCEPT FOR CHANGE IN DIMENSION SHOWN

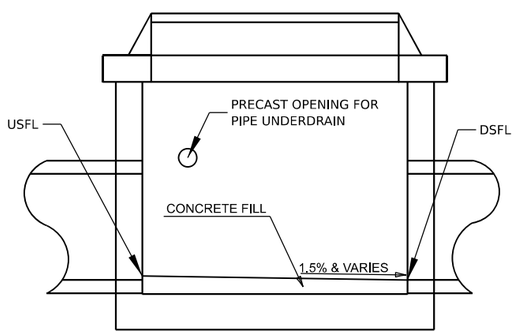

SECTION PARALLEL TO PIPE
NO EXISTING PIPE

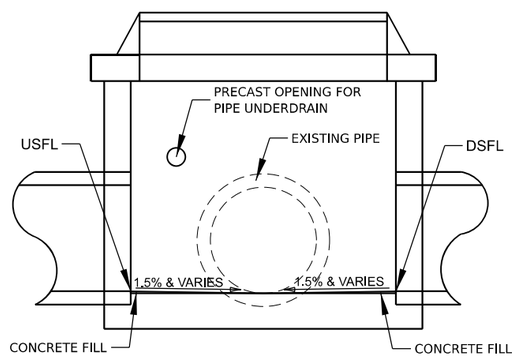

SECTION PARALLEL TO PIPE
WITH EXISTING PIPE

CONCRETE COLLAR

PIPE TO PIPE

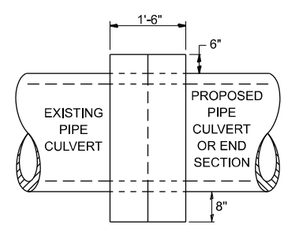

SIDE VIEW

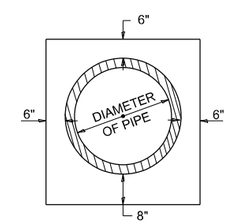

END VIEW

TABULATION

DIAMETER OF PIPE	CL SI CONC CU YDS EST
12"	0.24
15"	0.29
18"	0.32
24"	0.44
30"	0.56
36"	0.66
42"	0.80
48"	0.93
54"	1.07
60"	1.22
72"	1.55

THE CONCRETE COLLAR SHALL BE PAID FOR AT THE CONTRACT UNIT PRICE PER CUBIC YARD FORCONCRETE COLLAR, AS SHOWN ON THE PLANS, WHICH PRICE SHALL INCLUDE THE REMOVAL OF SUCH PORTIONS THE EXISTING HEADWALLS AS MAY BE REQUIRED.

CLASS SI CONCRETE SHALL BE USED THROUGHOUT.

* PIPE MINIMUM 2" FROM INSIDE EDGE OF DRAINAGE STRUCTURE
DISTANCE IS NOT REFLECTED IN ELECTRONIC MODEL

DRAWN	07-13-90
REVISED	03-26-08
REVISED	10-21-21
REVISED	05-03-22

STD. 9-02

23 PUBLIC SQUARE
SUITE 470
BELLEVILLE, IL 62220
(618) 641-9088
TREKK DESIGN GROUP, LLP

USER NAME = hjones	DESIGNED -	REVISED -	
	DRAWN -	REVISED -	
PLOT SCALE = 0.08333317 ' / in.	CHECKED -	REVISED -	
PLOT DATE = 9/26/2024	DATE -	REVISED -	

STATE OF ILLINOIS
DEPARTMENT OF TRANSPORTATION

DRAINAGE STRUCTURE DETAILS

SCALE: | SHEET 5 OF 6 SHEETS | STA. TO STA.

F.A.I. RTE.	SECTION	COUNTY	TOTAL SHEETS	SHEET NO.
57	(28-2)B-2; (28-1)B-2	*	598	297

CONTRACT NO. 78884

ILLINOIS | FED. AID PROJECT

*FRANKLIN/JEFFERSON

MODEL: District Standards [Sheet]
FILE NAME: G:\21-0366 20069 H&S IDOT 198-034 Various\02_IDOT_198-34_D9_Var_WO02\Design\CADD\Sheets\D978884-sht-details.dgn

DETAIL OF DRAIN HOLE FOR
DRAINAGE STRUCTURE TYPE 5
WITH TYPE 22 FRAME AND GRATE

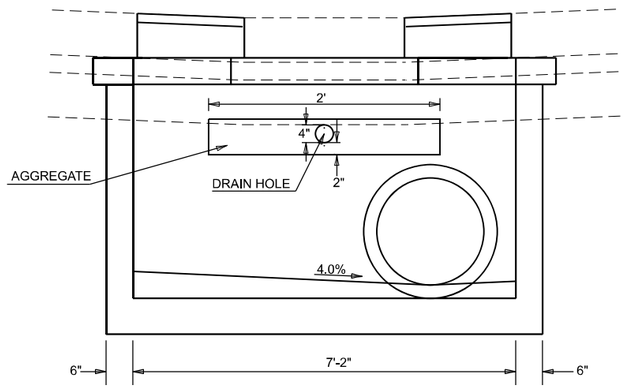

SIDE ELEVATION

HOT-MIX ASPHALT SHOULDERS, 10"

SUBBASE GRANULAR MATERIAL, TYPE A, 4"

SUBBASE GRANULAR MATERIAL, TYPE A, 12"

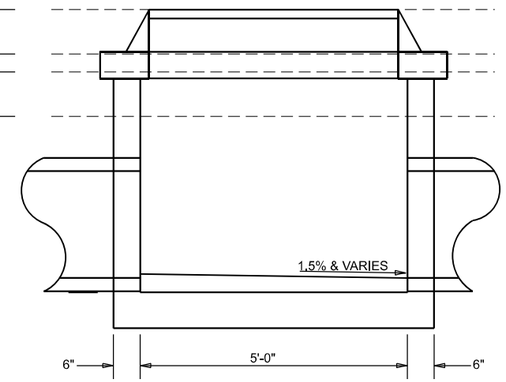

FRONT ELEVATION

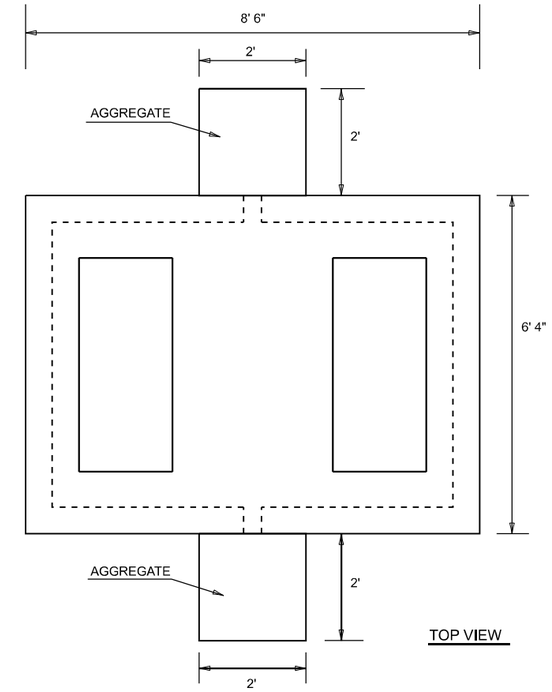

TOP VIEW

MODEL: District Standards-1 [Sheet]
FILE NAME: G:\21-0366 20069 H&S IDOT 198-034 Various\02 IDOT_198-34_09_Var_W002\Design\CADD\Sheets\0978884-ith-details.dgn

23 PUBLIC SQUARE
SUITE 470
BELLEVILLE, IL 62220
(618) 641-9088
TREKK DESIGN GROUP, LLC

USER NAME = hjones	DESIGNED -	REVISED -	
	DRAWN -	REVISED -	
PLOT SCALE = 0.08333317 ' / in.	CHECKED -	REVISED -	
PLOT DATE = 10/8/2024	DATE -	REVISED -	

STATE OF ILLINOIS
DEPARTMENT OF TRANSPORTATION

DRAINAGE STRUCTURE DETAILS

SCALE: | SHEET 6 OF 6 SHEETS | STA. TO STA.

F.A.I. RTE.	SECTION	COUNTY	TOTAL SHEETS	SHEET NO.
57	(28-2)B-2; (28-1)B-2	*	598	298

CONTRACT NO. 78884

ILLINOIS | FED. AID PROJECT

*FRANKLIN/JEFFERSON

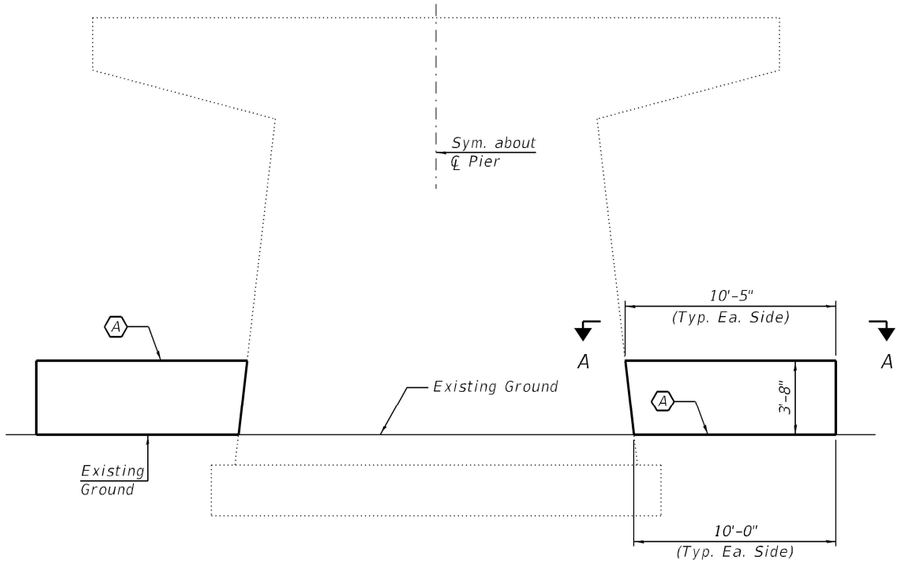

ELEVATION

A - Barrier Transition

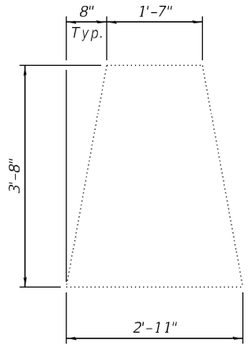

SECTION B-B

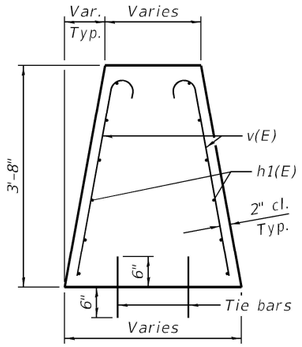

SECTION C-C

GENERAL NOTES

Plan dimensions and details relative to existing plans are subject to nominal construction variations. The Contractor shall field verify existing dimensions and details affecting new construction and make necessary approved adjustments prior to construction or ordering of materials. Such variations shall not be cause for additional compensation for a change in scope of work, however, the Contractor will be paid for the quantity actually furnished at the unit price bid for the work.

Reinforcement bars designated (E) shall be epoxy coated.

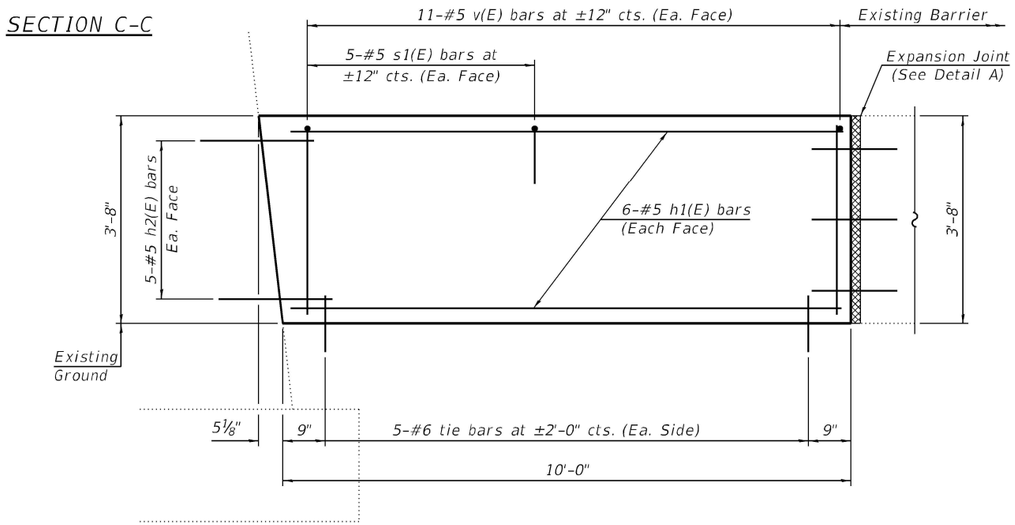

ELEVATION

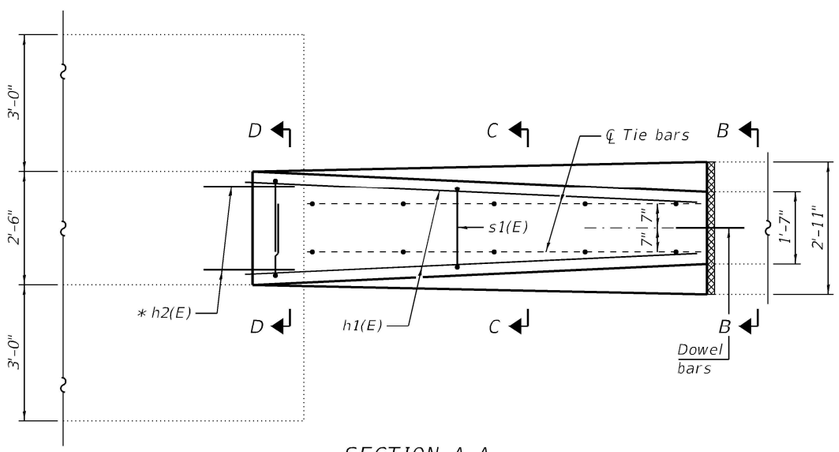

SECTION A-A

* Epoxy grout h2(E) bars in 9" min. holes according to Article 584 of the Standard Specifications.

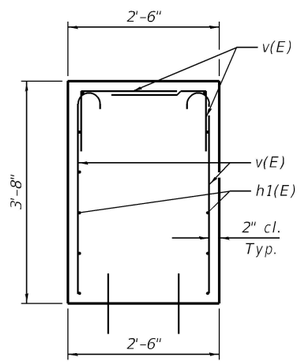

SECTION D-D

Notes:

The cost of tie bars shall be included with Concrete Structures.

The cost of expansion joints shall be included with Concrete Structures.

*** TOTAL BILL OF MATERIAL (PER BRIDGE)

ITEM	UNIT	QUANTITY
Concrete Structures	Cu. Yd.	13.2
Protective Coat	Sq. Yd.	23
Reinforcement Bars, Epoxy Coated	Pound	620

*** For information only. (To be paid for as Concrete Barrier, Double Face, 44-Inch Height. See Special Provisions)

Date: 12/06/2024
Expires: 11/30/2026

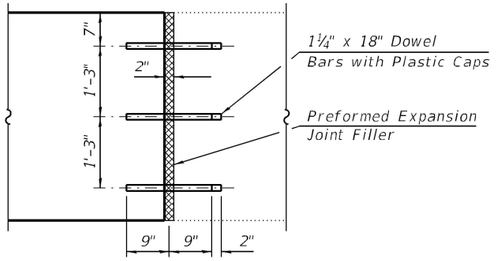

DETAIL A - EXPANSION JOINT

(See Standard 637006-04)

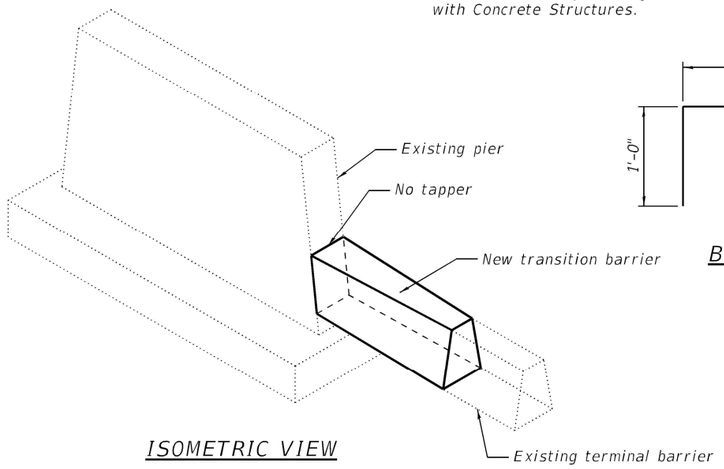

ISOMETRIC VIEW

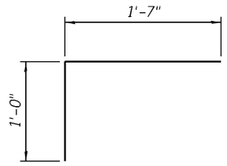

BAR s1(E)

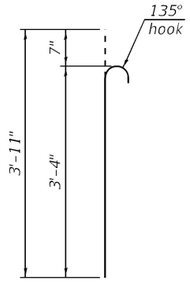

BAR v(E)

BILL OF MATERIAL

Bar	No.	Size	Length	Shape
h1(E)	24	#5	9'-8"	
h2(E)	20	#5	2'-0"	
s1(E)	20	#5	2'-7"	
v(E)	44	#5	3'-11"	
Concrete Structures			Cu. Yd.	13.2
** Protective Coat			Sq. Yd.	23
Reinforcement Bars, Epoxy Coated			Pound	620

** Apply to new concrete only.

MODEL: Default
FILE NAME: P:\Transportation\4858-IDOT 198-34 Dist. 9 v-A\ WO79\Structures\CAD - SS1\0280053-028711-0280093-0280055-78884-001 Barrier Wall-SH1.dgn

CDI CIVIL DESIGN, INC. WBE / DBE EFFINGHAM, IL LICENSE #184.003222

USER NAME = jSchreckenberg	DESIGNED - MJH	REVISED -	
	DRAWN - MJH	REVISED -	
PLOT SCALE = 10:0.0000 ':" / in.	CHECKED - JGS	REVISED -	
PLOT DATE = 7/12/2024	DATE - 07/11/2024	REVISED -	

STATE OF ILLINOIS
DEPARTMENT OF TRANSPORTATION

BARRIER TRANSITION DETAILS - PIER
STRUCTURE NO. 028-0053, 028-7111, 028-0059, & 028-0055

SCALE: | SHEET 1 OF 3 SHEETS | STA. | TO STA.

F.A.P. RTE.	SECTION	COUNTY	TOTAL SHEETS	SHEET NO.
IL-57	(28-2)B-2; (28-1)B-2	FRANKLIN	598	299

CONTRACT NO. 78884

ILLINOIS | FED. AID PROJECT

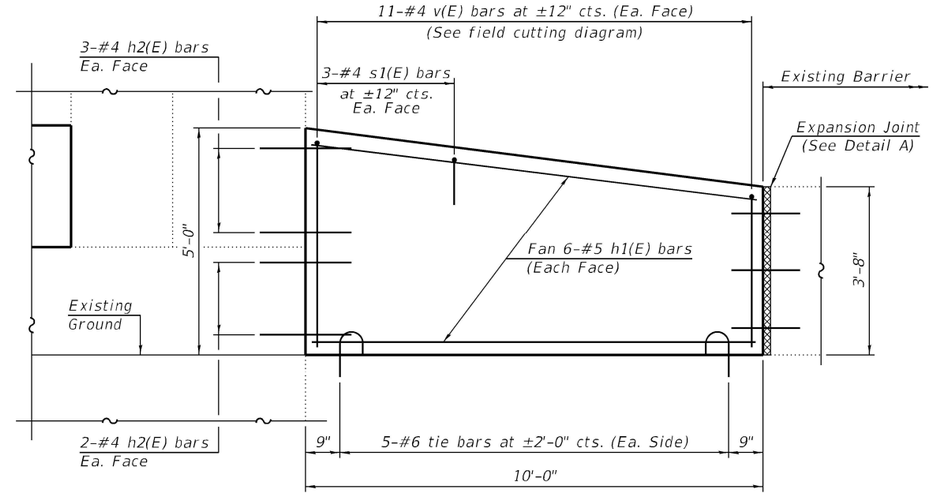

ELEVATION

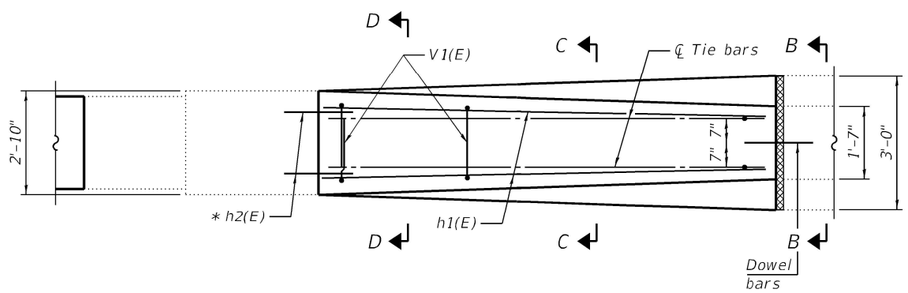

PLAN

* Epoxy grout h2(E) bars in 9" min. holes according to Article 584 of the Standard Specifications.

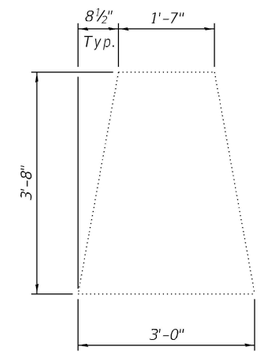

SECTION B-B

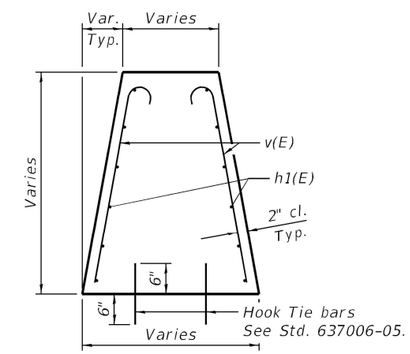

SECTION C-C

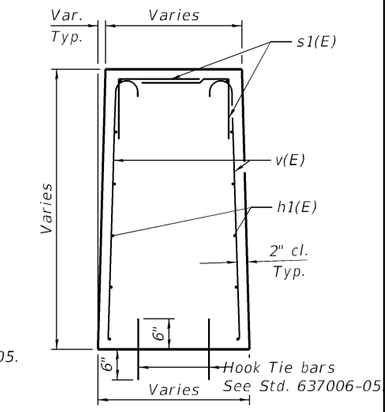

SECTION D-D

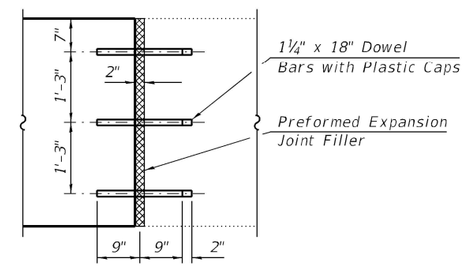

DETAIL A - EXPANSION JOINT

(See Standard 637006-05)

GENERAL NOTES

Plan dimensions and details relative to existing plans are subject to nominal construction variations. The Contractor shall field verify existing dimensions and details affecting new construction and make necessary approved adjustments prior to construction or ordering of materials. Such variations shall not be the cause for additional compensation for a change scope of work; however, the Contractor will be paid for the quantity actually furnished at the unit price bid for the work.

Reinforcement bars designated (E) shall be epoxy coated.

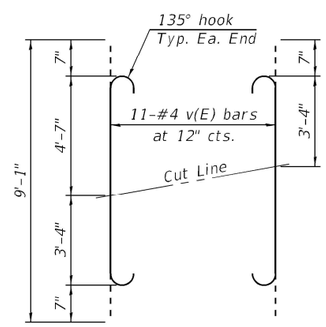

FIELD CUTTING DIAGRAM

Order v(E) bars full length. Cut as shown and use remainder of bars in opposite face.

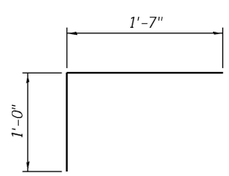

BAR s1(E)

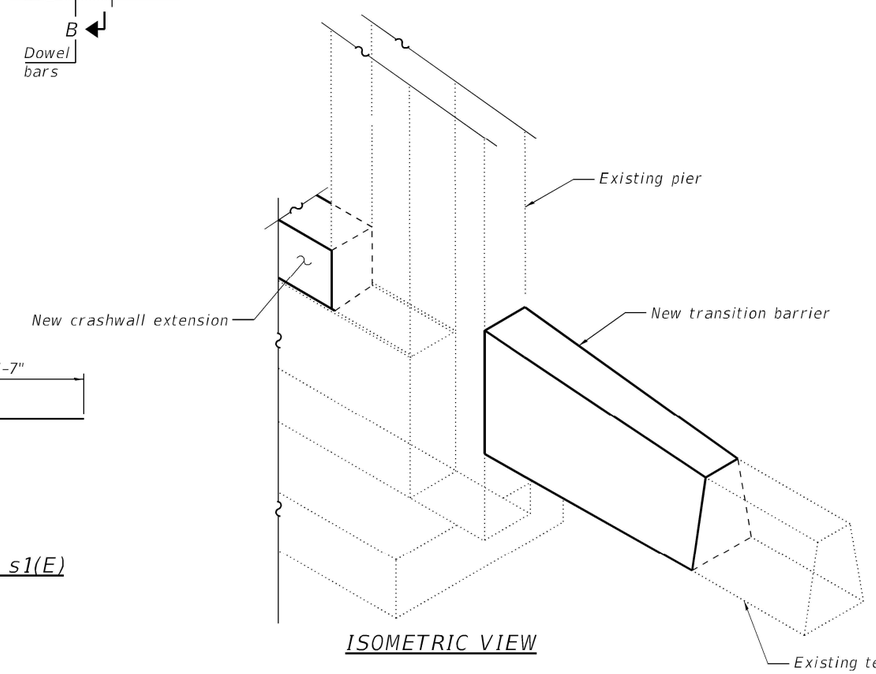

ISOMETRIC VIEW

Notes:

The cost of tie bars shall be included with Concrete Structures.

The cost of expansion joints shall be included with Concrete Structures.

LICENSED STRUCTURAL ENGINEER
JASON G. SCHRECKENBERG
081.006845
STATE OF ILLINOIS

Date: 12/06/2024
Expires: 11/30/2026

BILL OF MATERIAL (PIER TRANSITIONS)

Bar	No.	Size	Length	Shape
h1(E)	24	#5	9'-8"	
h2(E)	10	#4	2'-0"	
s1(E)	12	#4	2'-7"	
v(E)	22	#4	9'-1"	
Concrete Structures			Cu. Yd.	16.8
** Protective Coat			Sq. Yd.	24
Reinforcement Bars, Epoxy Coated			Pound	410

** Apply to new concrete only.

MODEL: Default
FILE NAME: P:\Transportation\4858-IDOT 198-34 Dist. 9 VA_WO29\Structures\CAD - SS100410113-78884-002 Barrier Transition-Sht2.dgn

CDI CIVIL DESIGN, INC. WBE / DBE EFFINGHAM, IL LICENSE #184.003222

USER NAME = jSchreckenberg	DESIGNED - MJH	REVISED -	
	DRAWN - MJH	REVISED -	
PLOT SCALE = 10:0.0000 ':" / in.	CHECKED - JGS	REVISED -	
PLOT DATE = 7/12/2024	DATE - 07/11/2024	REVISED -	

STATE OF ILLINOIS
DEPARTMENT OF TRANSPORTATION

BARRIER TRANSITION DETAILS - PIER
STRUCTURE NO. 041-0113

SCALE: | SHEET 2 OF 3 SHEETS | STA. TO STA.

F.A.P. RTE.	SECTION	COUNTY	TOTAL SHEETS	SHEET NO.
IL-57	(28-2)B-2; (28-1)B-2	JEFFERSON	598	300
		CONTRACT NO. 78884		
	ILLINOIS	FED. AID PROJECT		