01-17-2025 LETTING ITEM 058

| F.A.I. RTE. | SECTION | COUNTY | TOTAL SHEETS | SHEET NO. |
|---|---|---|---|---|
| 80 | (99-3DEFP) HF 23 | WILL | 89 | 1 |
| | ILLINOIS | CONTRACT NO. 62W52 | | |

# STATE OF ILLINOIS
# DEPARTMENT OF TRANSPORTATION

# PROPOSED
# HIGHWAY PLANS

## FAI ROUTE I–80 (INTERSTATE 80) AT DES PLAINES RIVER
## SECTION: (99–3DEFP) HF 23
## PROJECT: NHPP–VZMP(284)
## BEAM AND BEARING FABRICATION
## WILL COUNTY
C–91–161–24

### INDEX OF SHEETS


1 COVER SHEET
2 SUMMARY OF QUANTITIES
3-89 PROPOSED STEEL FABRICATION PLANS (SN 099-8309 & 8325)


D-91-204-19

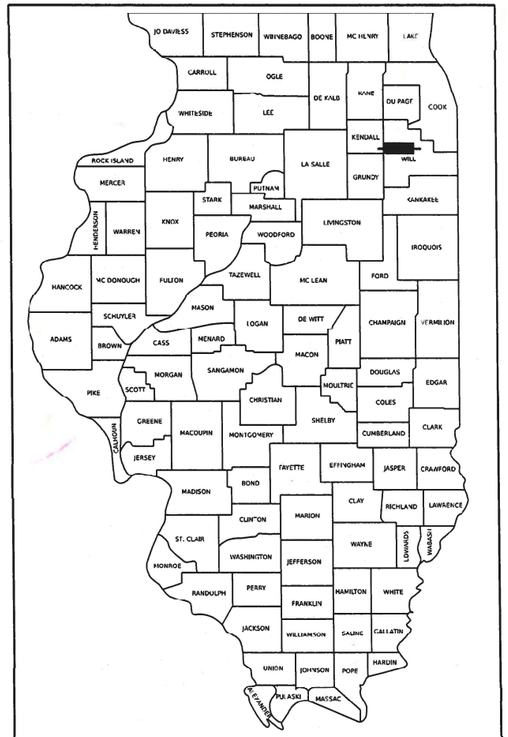


LOCATION OF SECTION INDICATED THUS: –

DAVID V. SKALESKI 062-046611 LICENSED PROFESSIONAL ENGINEER OF ILLINOIS

10/1/2024
DAVID V. SKALESKI DATE
LICENSE EXPIRES 11/30/2025
SHEET RANGE 1-2

PATRICK J. LAUX 081-007655 CHICAGO, ILLINOIS STATE OF ILLINOIS

10/1/2024
PATRICK J. LAUX, P.E., S.E. DATE
LICENSE EXPIRES 11/30/2026
SHEET RANGE 3-89

RANGE 10E, 3RD PRINCIPAL MERIDIAN

T. 35 N.

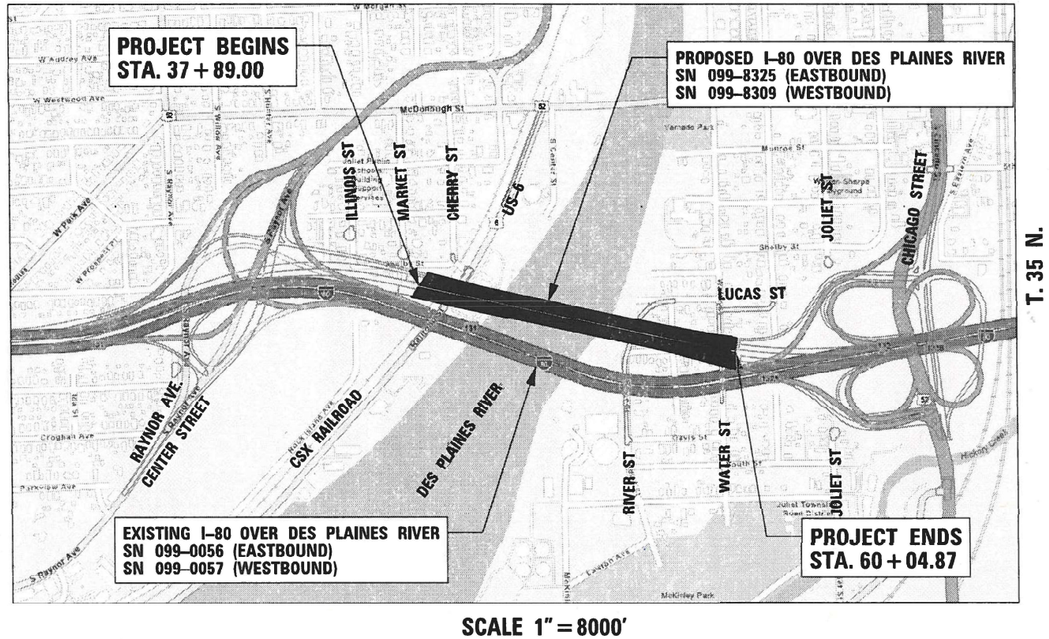


T. 35 N.

SCALE 1" = 8000'

GROSS LENGTH = 2158.30 FT. = 0.409 MILE

PROJECT IS LOCATED IN THE CITY OF JOLIET

100' 200' 300' — 1" = 100'
0 10' 20' 30' — 1" = 10'
0 50' 100' — 1" = 50'
0 50' 100' — 1" = 40'
0 50' 100' — 1" = 30'
0 50' 100' — 1" = 20'

FULL SIZE PLANS HAVE BEEN PREPARED USING STANDARD ENGINEERING SCALES. REDUCED SIZED PLANS WILL NOT CONFORM TO STANDARD SCALES. IN MAKING MEASUREMENTS ON REDUCED PLANS, THE ABOVE SCALES MAY BE USED.

J.U.L.I.E.
JOINT UTILITY LOCATION INFORMATION FOR EXCAVATION
1-800-892-0123
OR 811

PROJECT ENGINEER: KENNETH PARK, P.E.
PROJECT MANAGER: SULEYMAN TULGAR, P.E.

CONTRACT NO. 62W52


WSP USA Inc.
30 N. LASALLE STREET
SUITE 4200
CHICAGO, IL 60602
TEL: (312) 782-8150


STATE OF ILLINOIS
DEPARTMENT OF TRANSPORTATION

SUBMITTED Oct 3rd 2024
REGIONAL ENGINEER

December 6, 2024
ENGINEER OF DESIGN AND ENVIRONMENT

December 6, 2024
DIRECTOR OF HIGHWAYS PROJECT IMPLEMENTATION

PRINTED BY THE AUTHORITY OF THE STATE OF ILLINOIS

| CODE NO. | ITEM | UNIT | TOTAL QUANTITY | CONSTRUCTION CODE<br>90% FEDERAL / 10% STATE<br>BRIDGE<br>0010<br>SN 099-8309 AND SN-099-8325 |
|---|---|---|---|---|
| 50500205 | FURNISHING STRUCTURAL STEEL | L SUM | 1 | 1 |
| | | | | |
| 50500455 | STORAGE OF STRUCTURAL STEEL | CAL DA | 540 | 540 |
| | | | | |
| X5210073 | STORAGE OF HIGH LOAD MULTI-ROTATIONAL BEARINGS | CAL DA | 540 | 540 |
| | | | | |
| X5212425 | FURNISHING HIGH LOAD MULTI-ROTATIONAL BEARINGS, DISC, FIXED-900K | EACH | 18 | 18 |
| | | | | |
| X5212428 | FURNISHING HIGH LOAD MULTI-ROTATIONAL BEARINGS, DISC, FIXED-1500K | EACH | 16 | 16 |
| | | | | |
| X5212519 | FURNISHING HIGH LOAD MULTI-ROTATIONAL BEARINGS, DISC, NON-GUIDED EXPANSION-300K | EACH | 2 | 2 |
| | | | | |
| X5212619 | FURNISHING HIGH LOAD MULTI-ROTATIONAL BEARINGS, DISC, GUIDED EXPANSION-300K | EACH | 34 | 34 |
| | | | | |
| X5212621 | FURNISHING HIGH LOAD MULTI-ROTATIONAL BEARINGS, DISC, GUIDED EXPANSION-500K | EACH | 32 | 32 |
| | | | | |
| X5212628 | FURNISHING HIGH LOAD MULTI-ROTATIONAL BEARINGS, DISC, GUIDED EXPANSION-1500K | EACH | 16 | 16 |
| | | | | |
| Ø Z0076600 | TRAINEES | HOUR | 4000 | 4000 |
| Ø Z0076604 | TRAINEES - TRAINING PROGRAM GRADUATE | HOUR | 4000 | 4000 |
| | | | | |
| | | | | |
| | | | | |
| | | | | |
| | | | | |
| | | | | |
| | | | | |



WSP USA Inc.
30 N. LASALLE STREET
SUITE 4200
CHICAGO, IL 60602
TEL: (312) 782-8150

| | | |
|---|---|---|
| USER NAME = USCP702533 | DESIGNED - | REVISED - |
| | DRAWN - | REVISED - |
| PLOT SCALE = 2.000 ' / in. | CHECKED - | REVISED - |
| PLOT DATE = 10/17/2024 | DATE - 10/14/2024 | REVISED - |

**STATE OF ILLINOIS**
**DEPARTMENT OF TRANSPORTATION**

**SUMMARY OF QUANTITIES**

SCALE: | SHEET OF SHEETS | STA. TO STA.

| F.A. RTE. | SECTION | COUNTY | TOTAL SHEETS | SHEET NO. |
|---|---|---|---|---|
| 80 | (99-3DEFP) HF 23 | WILL | 89 | 2 |

CONTRACT NO. 62W52

ILLINOIS | FED. AID PROJECT

REV-SEP

MODEL: Default
FILE NAME: pw://transystems-pw.bentley.com:transyscorp-pw1-hosted/Documents/Projects_2018/CH401/401180022/03-WSP/CAD/62W52-SF-3/Sheets/D162W52-sht-SOQ.dgn

Benchmark: Magnetic nail in pavement, ℄ I-80 Sta. 38+10.02, Offset 504.24' Rt., Elev. 538.845.

Existing Structure: S.N. 099-0056 (EB) and S.N. 099-0057 (WB) were built in 1964 under Federal Aid Interstate Route 80 Project I-80-4(13)133 Section 99-3B, I-80-4(56)133 Section 99-3 F&E, I-UI-80-4(57)133 Section 99-3P, and I-UI-80-4(57)I33 Section 99-3D. The existing 27-span structures have total lengths of approximately 2,362'-6" (EB) and 2,300'-0" (WB). S.N. 099 0056 (EB) has an out to out width varying from 60'-0" to 48'-0" from the west abutment to span 6, and varying from 46'-7½" to 49'-6" from the truss span to the east abutment. S.N. 099-0057 (WB) has an out to out width varying from 74'-0" to 48'-0" from the west abutment to span 6, and varying from 46'-7½" to 65'-6" from the truss to the east abutment. The existing superstructures consist of a 3-span continuous, cantilever through truss over the Des Plaines River (Spans 7 through 9) and simple and continuous approach spans with steel beams and variable thickness deck (6 1/4" min.) and concrete overlay. The existing substructures consists of concrete abutments and multi-column or two column piers. Existing abutments are supported on steel piles and the piers are supported on spread footings. The existing structure is to be partially demolished where in conflict with the proposed structure in this contract and the remainder in a separate contract.

Traffic Control: The proposed dual structures will be built while traffic remains open on the existing structures. Shift WB Stage II traffic onto the proposed WB structure in order to complete the proposed EB structure.

No salvage. Existing bridge to be removed under separate contract, except for portions shown along the east and west spans.

## DESIGN SPECIFICATIONS

2020 AASHTO LRFD Bridge Design Specifications, 9th Edition

## LOADING HL-93

Allow 50#/sq. ft. for future wearing surface.

## SEISMIC DATA

Seismic Performance Zone (SPZ) = 1
Design Spectral Acceleration at 1.0 sec. (SD1) = 0.095g
Design Spectral Acceleration at 0.2 sec. (SDS) = 0.167g
Soil Site Class = D
Operational Classificiation = Critical

## LEGEND:

- Stage I Traffic: Proposed WB Construction and Partial EB Construction
- Stage II Traffic: Completion of Proposed EB Construction
- Proposed Traffic
- * Dimension Measured Along Local Reference Line in Unit 4.
- ** Subject to USCG Approval.

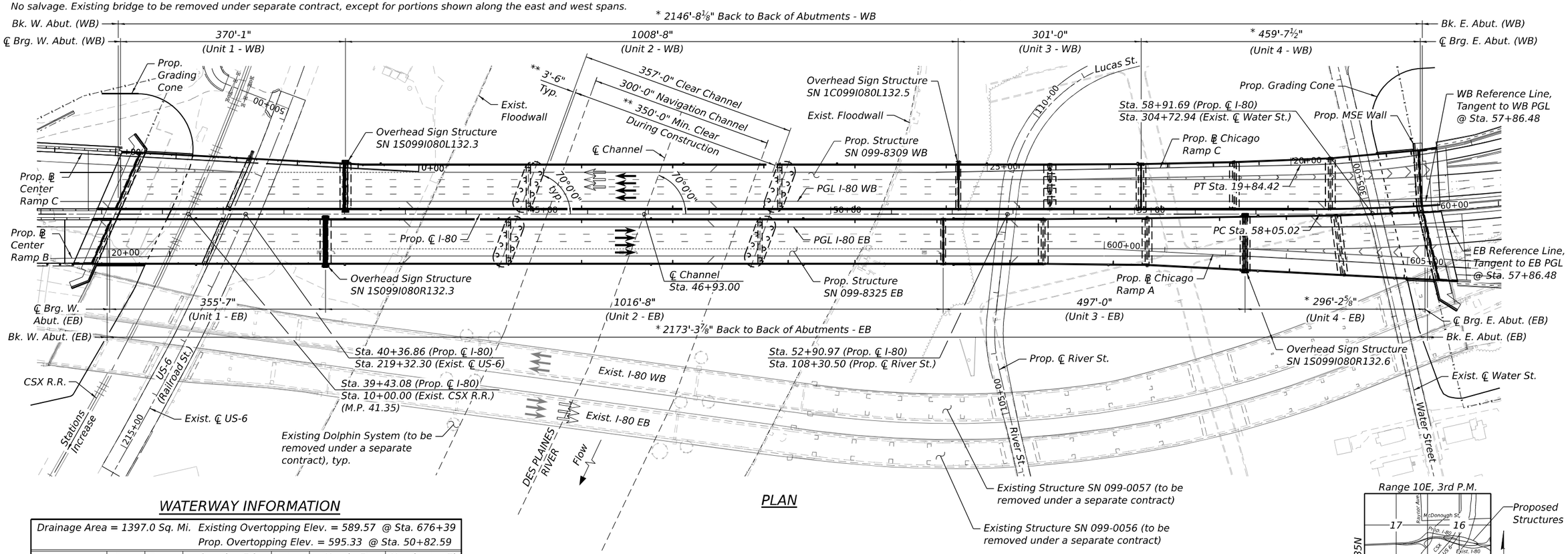


## PLAN

## WATERWAY INFORMATION

Drainage Area = 1397.0 Sq. Mi. Existing Overtopping Elev. = 589.57 @ Sta. 676+39
Prop. Overtopping Elev. = 595.33 @ Sta. 50+82.59

| Flood | Freq. Yr. | Q C.F.S. | Opening Ft² Exist. | Opening Ft² Prop. | Nat. H.W.E. | Head - Ft. Exist. | Head - Ft. Prop. | Headwater El. Exist. | Headwater El. Prop. |
|---|---|---|---|---|---|---|---|---|---|
| | 10 | 9600 | 11867 | 12423 | 538.71 | 0.01 | 0.01 | 538.72 | 538.72 |
| Design | 50 | 15600 | 12369 | 12922 | 539.53 | 0.01 | 0.01 | 539.54 | 539.54 |
| Base | 100 | 31100 | 12978 | 13527 | 540.50 | 0.05 | 0.02 | 540.55 | 540.52 |
| Overtopping | >500 | | | | | | | | |
| Max. Calc. | 500 | 35500 | 13001 | 13551 | 540.53 | 0.06 | 0.02 | 540.59 | 540.55 |

10-Yr. velocity through existing structure = 0.8 fps
10-Yr. velocity through proposed structure = 0.7 fps
All time H.W.E. & Date = 542 ft HA 89

## DESIGN SCOUR ELEVATION TABLE

| Event / Limit State | Design Scour Elevations (ft.) Pier 3WB | Pier 3EB | Pier 4WB | Pier 4EB | Item 113 |
|---|---|---|---|---|---|
| Q100 | 510.7 | 509.2 | 510.8 | 509.4 | 5 |
| Q200 | 510.7 | 509.2 | 510.8 | 509.4 | |
| Design | 510.7 | 509.2 | 510.8 | 509.4 | |
| Check | 510.7 | 509.2 | 510.8 | 509.4 | |

The scour elevations shown in this table correspond to estimated top of rock elevation.

STATE OF ILLINOIS
PATRICK J. LAUX
081-007655
CHICAGO, ILLINOIS
LICENSED STRUCTURAL ENGINEER

Patrick J. Laux 10/14/2024
Patrick J. Laux, P.E., S.E.
State of Illinois Lic. No. 081-007655
License Expires 11-30-2026.
This stamp applies to sheets S-1 thru S-87

## DESIGN STRESSES

FIELD UNITS

$f_c'$ = 3,500 psi
$f_c'$ = 4,000 psi (Superstructure)
$f_y$ = 60,000 psi (Reinforcement)
$f_y$ = 50,000 psi (M270 Grade 50, Units 3 & 4)
$f_y$ = 50,000 psi (M270 Grade 50W, Units 1 & 2)
$f_y$ = 70,000 psi (M270 Grade HPS 70W, Unit 2 Flanges Over Piers 3 & 4 only)

APPROVED
For Structural Adequacy Only
Engineer of Bridges & Structures

## NOTES:

1. See sheet S-2 & S-3 for General Plan & Elevations.
2. See sheet S-4 for General Notes, Index of Sheets & Total Bill of Material and Noise Abatement Wall locations, design heights and weights.

Range 10E, 3rd P.M.

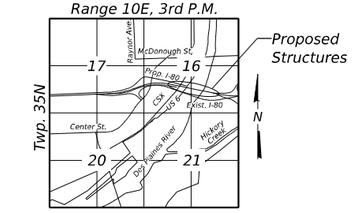


## LOCATION SKETCH

## KEY PLAN

I-80 OVER CSX, US-6 (RAILROAD ST.), DES PLAINES RIVER (PUBLIC WATER), RIVER ST. & WATER ST.
F.A.I. RTE. 80 - SEC. (99-3DEFP) HF 23
WILL COUNTY
STA. 46+93.00
STRUCTURE NO. 099-8309 WB
STRUCTURE NO. 099-8325 EB

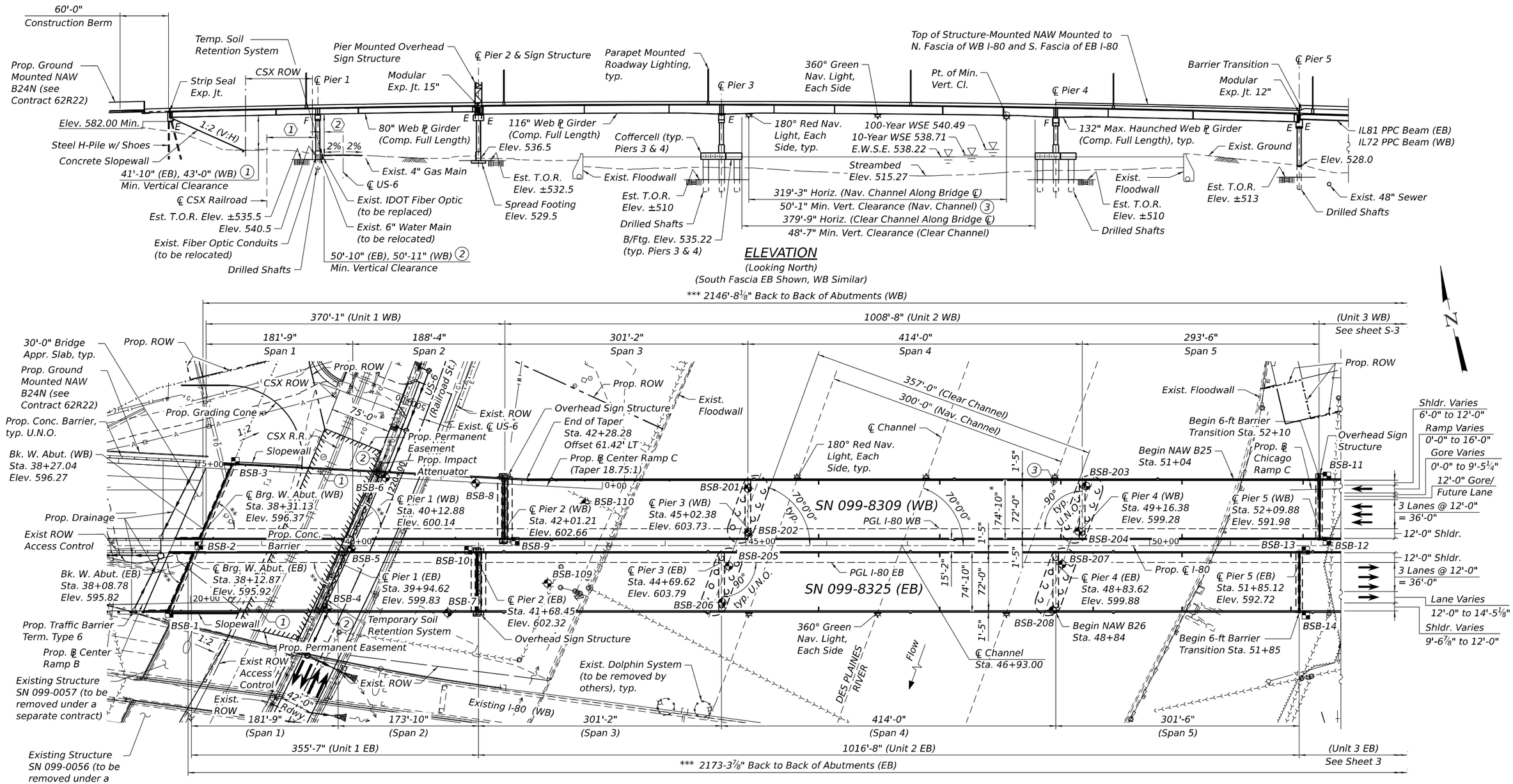


PLAN

## NOTES:

1. See sheet S-6 for varying shoulder, gore and ramp widths.
2. Up to 1/4" may be ground off the bridge deck and approach slabs.
3. No freefall deck drains will be permitted in the span over the tracks or within 10 ft. of cross arms of a railroad pole line.
4. Offsets are taken from Proposed ℄ I-80.

(1) 54'-10" at CSX R.R., measured perpendicular from ℄ track to west face of crashwall

(2) 3'-8¼" at US-6, measured perpendicular from edge of roadway to east face of crashwall

* Out-to-Out varies from 94'-3¼" at W. Abut. to 74'-10" at Sta. 42+28.42

** 66°30'0" Skew

*** Dimension measured along PGL or reference line in Unit 4

## LEGEND

| | | | |
|---|---|---|---|
| | Indicates Boring Location | W | Existing Water Main |
| | Indicates Future Boring Location | G | Existing Gas Main |
| (1) | Location of Min. Horiz. Clearance | FO | Existing Fiber Optic |
| (1) | Location of Min. Vert. Clearance | | Existing ROW |
| U.N.O. | Unless Noted Otherwise | AC | Existing ROW for Access Control |
| | Temporary Soil Retention System | | Proposed ROW |
| | Existing Sewer | | Permanent Easement |


WSP USA Inc.
30 N. LASALLE STREET
SUITE 4200
CHICAGO, IL 60602
TEL: (312) 782-8150
FAX: (312) 782-1684


| | | | |
|---|---|---|---|
| USER NAME = USCP702533 | DESIGNED - PSK | REVISED - | |
| | CHECKED - PJL | REVISED - | |
| PLOT SCALE = 120.0000 ' / in. | DRAWN - PSK | REVISED - | |
| PLOT DATE = 10/11/2024 | CHECKED - PJL | REVISED - | |

**STATE OF ILLINOIS**
**DEPARTMENT OF TRANSPORTATION**

**GENERAL PLAN & ELEVATION - UNITS 1 & 2**
**STRUCTURE NUMBER 099-8309 WB AND 099-8325 EB**

SHEET S-2 OF S-87 SHEETS

| F.A.I RTE. | SECTION | COUNTY | TOTAL SHEETS | SHEET NO. |
|---|---|---|---|---|
| I-80 | (99-3DEFP) HF 23 | WILL | 89 | 4 |
| | | CONTRACT NO. 62W52 | | |
| | ILLINOIS | FED. AID PROJECT | | |


MODEL: Default
FILE NAME: pw://transystems-pw.bentley.com:transyscorp-pw1-hosted/Documents/Projects_2018/CH401/401180022/03-WSP/CAD/62W52-SP-3/Sheets/0998309-62W52-S002-GPE01.dgn

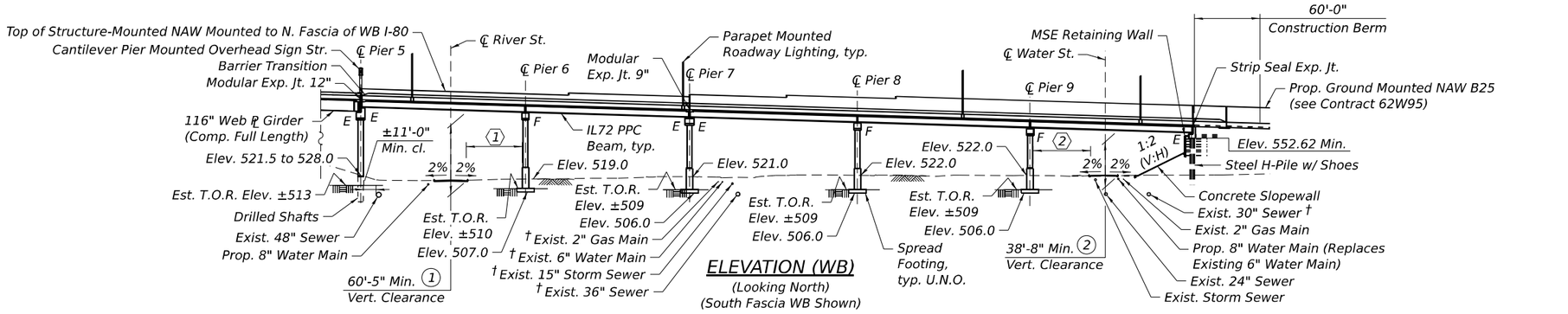


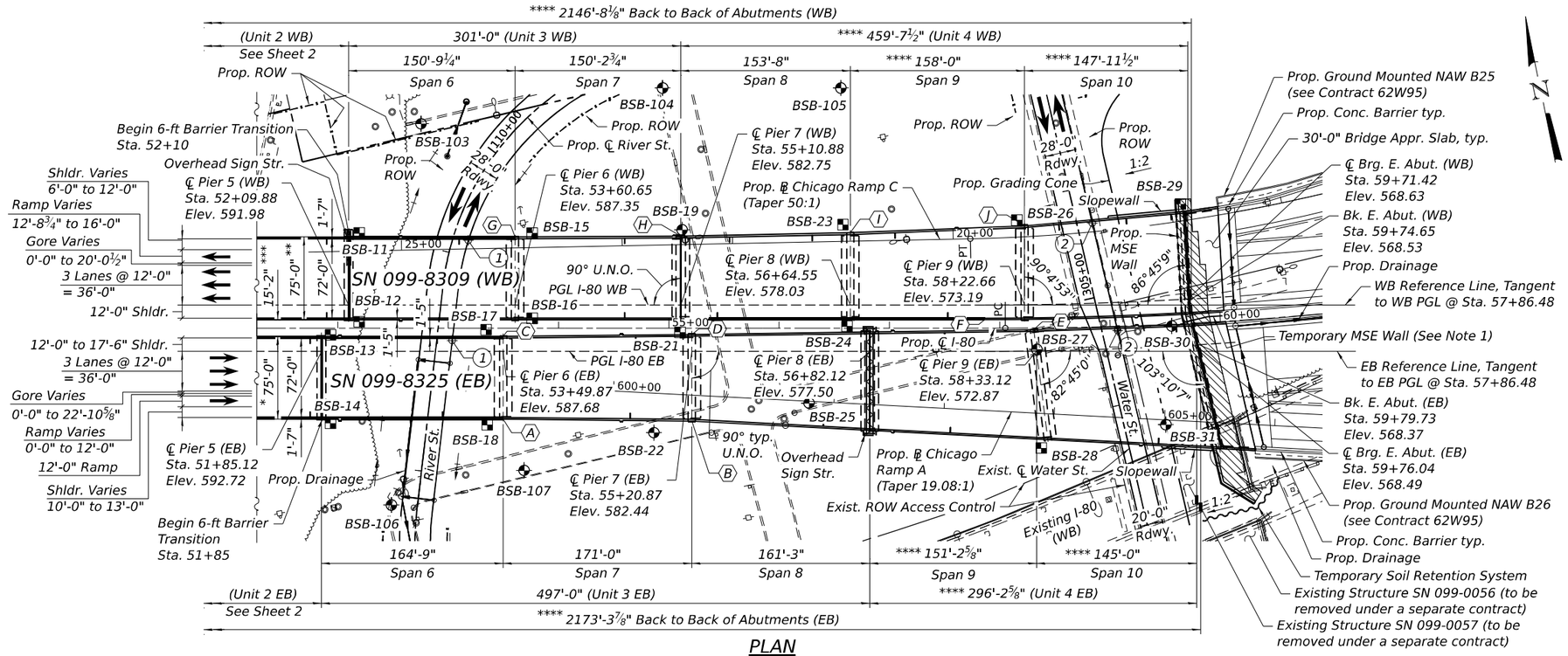


## PLAN

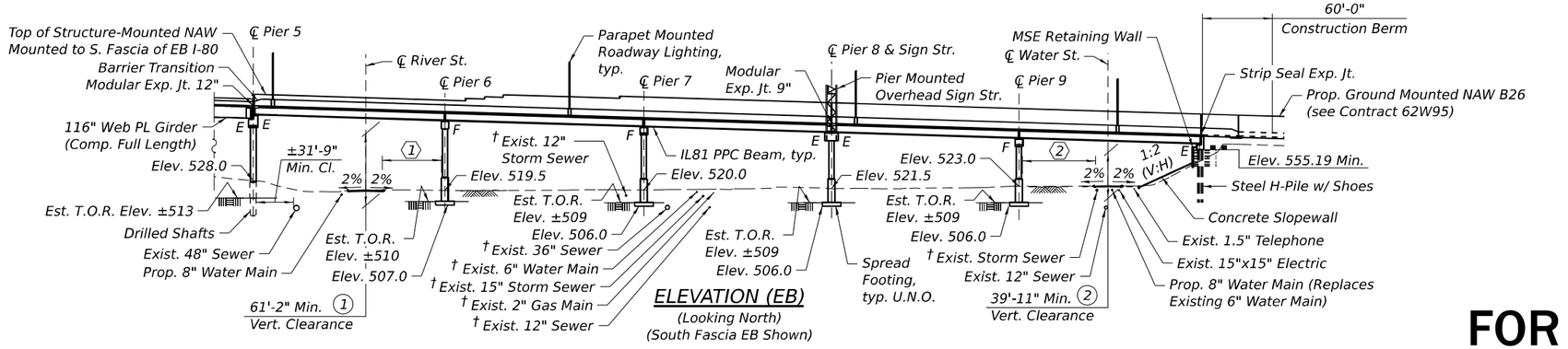


* Out-to-Out varies from 75'-0" at Sta. 53+49.87 to 112'-1" at the East Abutment.

** Out-to-Out varies from 75'-0" at Sta. 53+60.65 to 93'-1¾" at the East Abutment.

*** Varies from Sta. 53+98.94 to end of bridge deck, 15'-2" Max. to 8'-7¼" Min. (clear between back face of parapets)

**** Dimension measured along local reference line in Unit 4.

† Indicates utility to be abandoned.

① 35'-8" at River St., measured perp. from edge of roadway

② 29'-3" at Water St., measured perp. from edge of roadway

## DECK TAPER STATIONS & OFFSETS

Measured From Prop. ℄ I-80

| | |
|---|---|
| Ⓐ Sta. 53+49.87 Offset 82.58' RT | Ⓕ Sta. 57+86.48 Offset 7.58' LT |
| Ⓑ Sta. 55+20.87 Offset 84.33' RT | Ⓖ Sta. 53+60.65 Offset 82.58' LT |
| Ⓒ Sta. 53+49.87 Offset 7.58' RT | Ⓗ Sta. 55+10.88 Offset 83.34' LT |
| Ⓓ Sta. 55+20.87 Offset 5.85' RT | Ⓘ Sta. 56+64.55 Offset 86.41' LT |
| Ⓔ Sta. 58+30.84 Offset 1.56' RT | Ⓙ Sta. 58+22.96 Offset 92.67' LT |

## LEGEND

| | | | |
|---|---|---|---|
| | Indicates Boring Location | | Existing Sewer |
| | Indicates Future Boring Location | W | Existing Water Main |
| ① | Location of Min. Horiz. Clearance | G | Existing Gas Main |
| ① | Location of Min. Vert. Clearance | E | Existing Underground Electric |
| Ⓐ | Location of Deck Kink Pt. | T | Existing Telephone |
| U.N.O. | Unless Noted Otherwise | A | Existing Aerial |
| | Approximate Limits of Reinforced Soil Mass | | Existing Drainage |
| | Temporary Soil Retention System | | Proposed Drainage |
| | | | Existing ROW |
| | | AC | Existing ROW for Access Control |
| | | | Proposed ROW |
| | | | Permanent Easement |

## NOTES:

1. MSE Wall to be built in stages.
2. Up to 1/4" may be ground off the bridge deck and approach slabs.
3. Offsets are taken from Proposed ℄ I-80.

# FOR INFORMATION ONLY

MODEL: Default
FILE NAME: pw://transystems-pw.bentley.com:transyscorp-pw1-hosted/Documents/Projects_2018/CH401/401180022/03-WSP/CAD/62W52-SF-3/Sheets/0998309-62W52-S003-GP002.dgn


WSP USA Inc.
30 N. LASALLE STREET
SUITE 4200
CHICAGO, IL 60602
TEL: (312) 782-8150
FAX: (312) 782-1684


| | | | |
|---|---|---|---|
| USER NAME = USCP702533 | DESIGNED - PSK | REVISED - | |
| | CHECKED - PJL | REVISED - | |
| PLOT SCALE = 120.000 ' / in. | DRAWN - PSK | REVISED - | |
| PLOT DATE = 10/11/2024 | CHECKED - PJL | REVISED - | |

**STATE OF ILLINOIS**
**DEPARTMENT OF TRANSPORTATION**

**GENERAL PLAN & ELEVATION - UNITS 3 & 4**
**STRUCTURE NUMBER 099-8309 WB AND 099-8325 EB**

SHEET S-3 OF S-87 SHEETS

| F.A.I RTE. | SECTION | COUNTY | TOTAL SHEETS | SHEET NO. |
|---|---|---|---|---|
| I-80 | (99-3DEFP) HF 23 | WILL | 89 | 5 |
| | | CONTRACT NO. 62W52 | | |
| | ILLINOIS | FED. AID PROJECT | | |

## GENERAL NOTES

1. These plans are for fabrication of the structural steel and bearings. All work shown related to the erection and installation of the structural steel and bearings is for information only and is to be included in Contract 62R23.

2. Fasteners shall be ASTM F 3125 Grade A325 Type 1, mechanically galvanized bolts in painted or coated metallized areas. Fasteners shall be ASTM F3125 Grade A325 Type 3 weathering steel bolts in unpainted areas. Bolts $^{7}/_{8}$ in. diameter, holes $^{15}/_{16}$ in. diameter, unless otherwise noted.

3. Calculated weight of structural steel:
   a. M270 Grade 50W = 1,586,190 Lbs. (Unit 1 WB)
   b. M270 Grade 50W = 1,373,350 Lbs. (Unit 1 EB)
   c. M270 Grade 50W = 6,609,970 Lbs. (Unit 2 WB)
   d. M270 Grade HPS 70W = 818,410 Lbs. (Unit 2 WB)
   e. M270 Grade 50W = 6,649,260 Lbs. (Unit 2 EB)
   f. M270 Grade HPS 70W = 818,410 Lbs. (Unit 2 EB)

4. All structural steel shall be AASHTO M270 Grade 50W except designated flanges over interior piers which shall be AASHTO M270 Grade 70W and expansion bearings which shall be AASHTO M270 Grade 50, and unless otherwise noted in the plans.

5. No field welding is permitted except as specified in the contract documents.

6. All structural steel girders, cross-frames, lateral bracing, and exposed surfaces of bearings within a distance of 10 ft. each way from deck joints shall be metallized. See special provision for "Metalizing of Structural Steel." Fascia beam areas that have received metallizing shall be painted Reddish Brown, Munsell No 2.5YR 3/4, with the exception that the contact area between the girder bottom flange and bearing sole plate shall be metalized only and shall be masked off prior to application of the paint system.

7. Exposed surfaces of bearings not under deck joints shall be painted using the Organic Zinc-Rich/Epoxy/Urethane paint system as specified in Section 506 of the Standard Specifications, unless otherwise noted. The color of the final finish coat shall be gray, Munsell No 5B 7/1.

8. It is anticipated that the delivery of the structural steel and bearings will be required by January 4, 2027, for SN 099-8309 WB and July 31, 2027, for SN 099-8325 EB. The delivery dates shall be coordinated with IDOT and the Contractor responsible for Contract 62R23.

## INDEX OF SHEETS


| | |
|---|---|
| S-1 | Key Plan |
| S-2 | General Plan & Elevation - Unit 1 & 2 |
| S-3 | General Plan & Elevation - Unit 3 & 4 |
| S-4 | General Notes, Index of Sheets & Total Bill of Material |
| S-5 | General Data |
| S-6 | Bridge Cross Sections Unit 1 & 2 |
| S-7 to S-13 | Top of Slab Elevations – Unit 1 WB |
| S-14 to S-19 | Top of Slab Elevations – Unit 1 EB |
| S-20 to S-31 | Top of Slab Elevations – Unit 2 WB |
| S-32 to S-43 | Top of Slab Elevations – Unit 2 EB |
| S-44 | Deck Plan - Unit 1 WB |
| S-45 | Deck Cross Section and Parapet - Unit 1 WB |
| S-46 | Deck Plan - Unit 1 EB |
| S-47 | Deck Cross Section and Parapet - Unit 1 EB |
| S-48 | Deck Pouring Sequence - Unit 1 WB & EB |
| S-49 to S-51 | Deck Plan - Unit 2 WB |
| S-52 | Deck Cross Section and Parapet - Unit 2 WB |
| S-53 to S-55 | Deck Plan - Unit 2 EB |
| S-56 | Deck Cross Section and Parapet - Unit 2 EB |
| S-57 | Deck Pouring Sequence - Unit 2 WB & EB |
| S-58 | Framing Plan & Elevation - Unit 1 WB |
| S-59 | Framing Plan & Elevation - Unit 1 EB |
| S-60 | Framing Plan Details - Unit 1 WB & EB |
| S-61 | Moment and Reaction Tables - Unit 1 WB |
| S-62 | Moment and Reaction Tables - Unit 1 EB |
| S-63 | Camber Diagram - Unit 1 WB & EB |
| S-64 | Field Splice Details - Unit 1 WB |
| S-65 | Field Splice Details - Unit 1 EB |
| S-66 | Abutment End Cross Frame Details - Unit 1 WB & EB |
| S-67 | Interior Cross Frame Details - Unit 1 WB & EB |
| S-68 | Modular Joint Steel Details - Unit 1 WB & EB |
| S-69 to S-71 | Framing Plan & Elevation - Unit 2 WB |
| S-72 to S-74 | Framing Plan & Elevation - Unit 2 EB |
| S-75 | Moment and Reaction Tables - Unit 2 WB |
| S-76 | Moment and Reaction Tables - Unit 2 EB |
| S-77 | Camber Diagram - Unit 2 WB & EB |
| S-78 | Field Splice Details - Unit 2 WB & EB |
| S-79 | Interior Cross Frame Details - Unit 2 WB & EB |
| S-80 | Stiffener Details - Unit 2 WB & EB |
| S-81 | Modular Joint Steel Details - Unit 2 WB & EB |
| S-82 | Lateral Bracing Details - Unit 2 WB & EB |
| S-83 | Navigation Light Support Details - Unit 2 WB & EB |
| S-84 | Fixed HLMR Disc Bearing Details |
| S-85 | Guided Expansion HLMR Disc Bearing Details |
| S-86 | Non-Guided Expansion HLMR Disc Bearing Details |
| S-87 | HLMR Disc Bearing Details |


## TOTAL BILL OF MATERIAL

| ITEM | UNIT | SUPER | SUB | TOTAL |
|---|---|---|---|---|
| Furnishing Structural Steel | L. Sum | 1 | — | 1 |
| Storage of Structural Steel | Cal. Da. | 540 | — | 540 |
| Storage of High Load Multi-Rotational Bearings | Cal. Da. | 540 | — | 540 |
| Furnishing High Load Multi-Rotational Bearings, Disc, Fixed - 900K | Each | 18 | — | 18 |
| Furnishing High Load Multi-Rotational Bearings, Disc, Fixed- 1500K | Each | 16 | — | 16 |
| Furnishing High Load Multi-Rotational Bearings, Disc, Non-Guided Expansion - 300K | Each | 2 | — | 2 |
| Furnishing High Load Multi-Rotational Bearings, Disc, Guided Expansion - 300K | Each | 34 | — | 34 |
| Furnishing High Load Multi-Rotational Bearings, Disc, Guided Expansion - 500K | Each | 32 | — | 32 |
| Furnishing High Load Multi-Rotational Bearings, Disc, Guided Expansion - 1500K | Each | 16 | — | 16 |

## WB NOISE ABATEMENT WALL LOCATION, HEIGHT AND WEIGHT TABLE

| Location | Station | Offset | Ht. of Parapet (ft) | Ht. of NAW (ft) | Total Ht. (ft) | NAW Weight (k/ft) |
|---|---|---|---|---|---|---|
| Start of NAW B25 (Span 5) | 51+04.00 | 82.42' LT | 3.67 | 2.33 | 6.00 | 0.06 |
| ℄ Pier 5 | 52+09.88 | 82.58' LT | 6.00 | 4.00 | 10.00 | 0.10 |
| ℄ Pier 6 | 53+60.65 | 82.58' LT | 6.00 | 4.00 | 10.00 | 0.10 |
| Height Transition | 54+00.00 | 82.78' LT | 6.00 | 6.00 | 12.00 | 0.13 |
| ℄ Pier 7 | 55+10.88 | 83.33' LT | 6.00 | 8.00 | 14.00 | 0.18 |
| Height Transition | 56+00.00 | 85.12' LT | 6.00 | 10.00 | 16.00 | 0.22 |
| ℄ Pier 8 | 56+64.55 | 86.41' LT | 6.00 | 10.00 | 16.00 | 0.22 |
| Height Transition | 57+00.00 | 87.82' LT | 6.00 | 12.00 | 18.00 | 0.25 |
| ℄ Pier 9 | 58+22.96 | 92.67' LT | 6.00 | 12.00 | 18.00 | 0.25 |
| F.F. of E. Abut. Backwall | 59+72.28 | 101.56' LT | 6.00 | 12.00 | 18.00 | 0.25 |
| E. End of E. Appr. Slab | 60+04.15 | 104.10' LT | 6.00 | 12.00 | 18.00 | 0.25 |

## EB NOISE ABATEMENT WALL LOCATION, HEIGHT AND WEIGHT TABLE

| Location | Station | Offset | Ht. of Parapet (ft) | Ht. of NAW (ft) | Total Ht. (ft) | NAW Weight (k/ft) |
|---|---|---|---|---|---|---|
| Start of NAW B26 (Span 5) | 48+84.00 | 82.42' RT | 3.67 | 2.33 | 6.00 | 0.06 |
| ℄ Pier 5 | 51+85.12 | 82.58' RT | 6.00 | 4.00 | 10.00 | 0.10 |
| ℄ Pier 6 | 53+49.87 | 82.58' RT | 6.00 | 4.00 | 10.00 | 0.10 |
| Height Transition | 53+68.00 | 82.77' RT | 6.00 | 6.00 | 12.00 | 0.13 |
| Height Transition | 53+84.00 | 82.93' RT | 6.00 | 8.00 | 14.00 | 0.18 |
| Height Transition | 54+00.00 | 83.10' RT | 6.00 | 10.00 | 16.00 | 0.22 |
| Height Transition | 55+00.00 | 84.12' RT | 6.00 | 12.00 | 18.00 | 0.25 |
| ℄ Pier 7 | 55+20.87 | 84.33' RT | 6.00 | 12.00 | 18.00 | 0.25 |
| ℄ Pier 8 | 56+82.12 | 92.78' RT | 6.00 | 12.00 | 18.00 | 0.25 |
| ℄ Pier 9 | 58+42.37 | 101.47' RT | 6.00 | 12.00 | 18.00 | 0.25 |
| F.F. of E. Abut. Backwall | 59+94.06 | 115.26' RT | 6.00 | 12.00 | 18.00 | 0.25 |
| E. End of E. Appr. Slab | 60+23.76 | 118.85' RT | 6.00 | 12.00 | 18.00 | 0.25 |

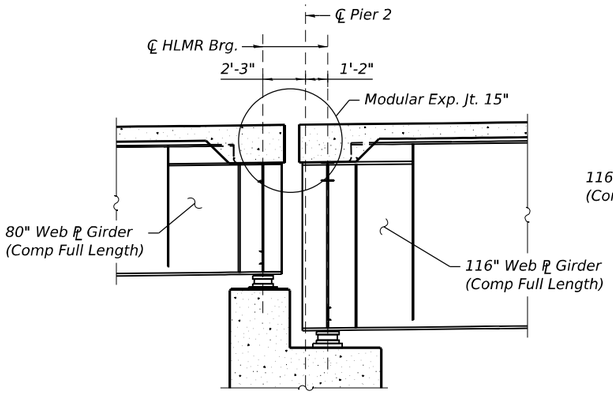


## SECTION THRU EXP. PIER - PIER 2

(Looking North)
(Horiz. Dims @ Rt. L's to ℄ Pier)

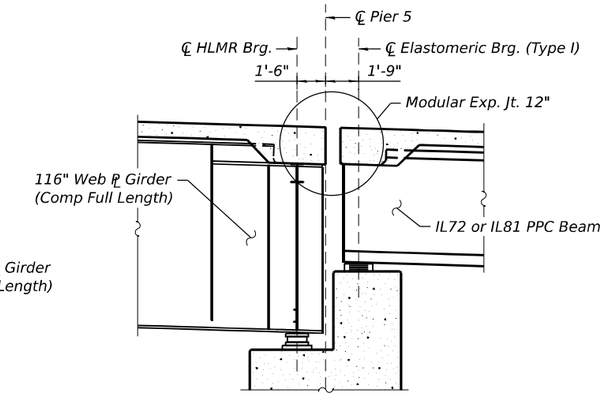


## SECTION THRU EXP. PIER - PIER 5

(Looking North)
(Horiz. Dims @ Rt. L's to ℄ Pier)

## CURVE DATA

PR CURVE PR-I80-2
P.I. Sta. = 64+27.70
Δ = 22°01'22" (LT)
D = 01°47'26"
R = 3,200.00'
T = 622.68'
L = 1,229.99'
E = 60.02'
e = 5.2%
T.R. (EB) = 75'
T.R. (WB) = 93'
S.E. Runoff (EB) = 312'
S.E. Runoff (WB) = 390'
P.C. Sta. = 58+05.02
P.T. Sta. = 703+94.49

## CURVE DATA

PR CURVE CHICAGO-C-3
P.I. Sta. = 17+86.92
Δ = 15°10'38" (RT)
D = 03°49'11"
R = 1,500.00'
T = 199.84'
L = 397.34'
E = 13.25'
e = 6.0%
T.R. = N.A.
S.E. Runoff = 128'
P.C. Sta. = 15+87.08
P.T. Sta. = 19+84.42

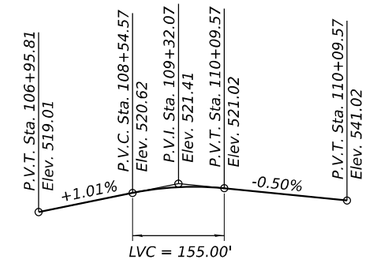


## RIVER ST.
## PROPOSED PROFILE GRADE

## CURVE DATA

PR CURVE US6-1
P.I. Sta. = 221+98.26
Δ = 20°18'37" (LT)
D = 01°29'35"
R = 3,837.54'
T = 687.38'
L = 1,360.34'
E = 61.08'
P.C. Sta. = 215+10.87
P.T. Sta. = 228+71.21

## CURVE DATA

PR CURVE RIVER-2
P.I. Sta. = 110+43.93
Δ = 69°58'03" (RT)
D = 22°55'06"
R = 250.00'
T = 174.95'
L = 305.29'
E = 55.13'
P.C. Sta. = 108+68.98
P.T. Sta. = 111+74.27

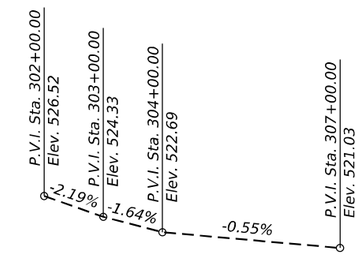


## WATER ST.
## EXISTING PROFILE GRADE

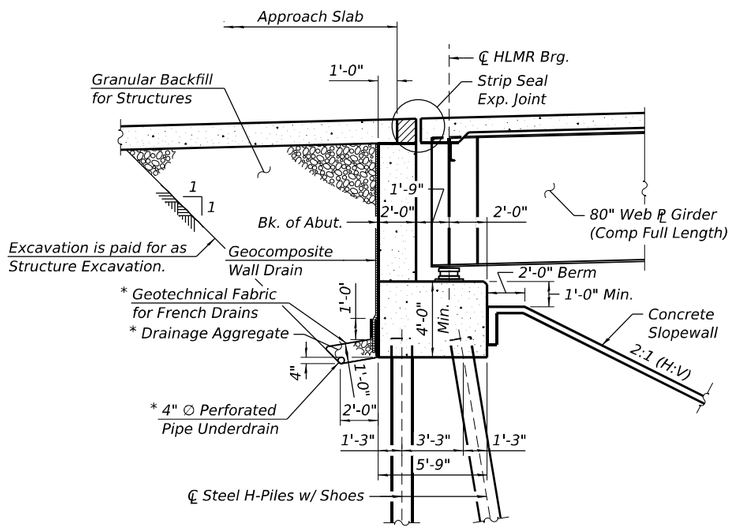


## SECTION THRU WEST ABUTMENT

(Looking North)
(Horiz. Dims @ Rt. L's to ℄ Abutment)

* Included in the cost of Pipe Underdrains for Structures.
(See Special Provisions)

Note:
All drainage system components shall extend parallel to the abutment back wall until they intersect the wingwalls. The pipe shall extend under the wingwall until intersecting the side slopes. The pipes shall drain into concrete headwalls. (See Article 601.05 of the Standard Specifications and Highway Standard 601110).

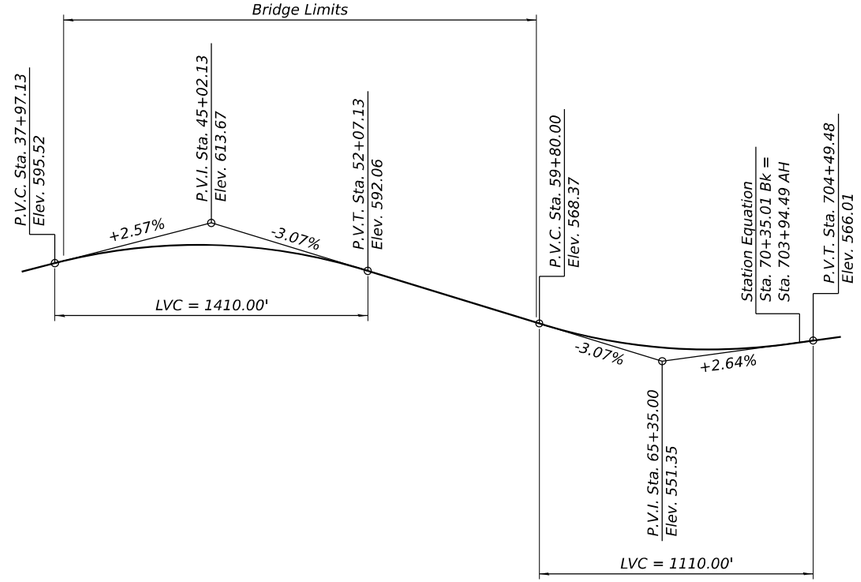


## I-80 PROPOSED PROFILE GRADE (EB & WB)

The Profile Grade shows the final grade after grinding.

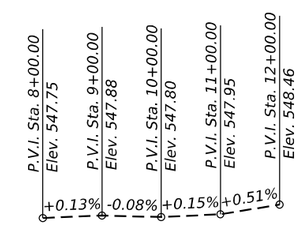


## CSX R.R. (M.P. 41.35)
## EXISTING PROFILE GRADE

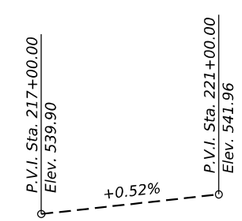


## RAILROAD ST. (US-6)
## EXISTING PROFILE GRADE

# FOR INFORMATION ONLY

MODEL: Default
FILE NAME: pw://transystems-pw.bentley.com:transyscorp-pw1-hosted/Documents/Projects_2018/CH401/401180022/03-WSP/CAD/62W52-SF-3/Sheets/0998309-62W52-S005-GEN02.dgn

WSP USA Inc.
30 N. LASALLE STREET
SUITE 4200
CHICAGO, IL 60602
TEL: (312) 782-8150
FAX: (312) 782-1684

| | | | |
|---|---|---|---|
| USER NAME = USCP702533 | DESIGNED - PSK | REVISED - | |
| | CHECKED - PJL | REVISED - | |
| PLOT SCALE = 8.000 ' / in. | DRAWN - PSK | REVISED - | |
| PLOT DATE = 10/11/2024 | CHECKED - PJL | REVISED - | |

STATE OF ILLINOIS
DEPARTMENT OF TRANSPORTATION

GENERAL DATA
STRUCTURE NUMBER 099-8309 WB AND 099-8325 EB

SHEET S-5 OF S-87 SHEETS

| F.A.I RTE. | SECTION | COUNTY | TOTAL SHEETS | SHEET NO. |
|---|---|---|---|---|
| I-80 | (99-3DEFP) HF 23 | WILL | 89 | 7 |
| | | CONTRACT NO. 62W52 | | |
| | ILLINOIS | FED. AID PROJECT | | |

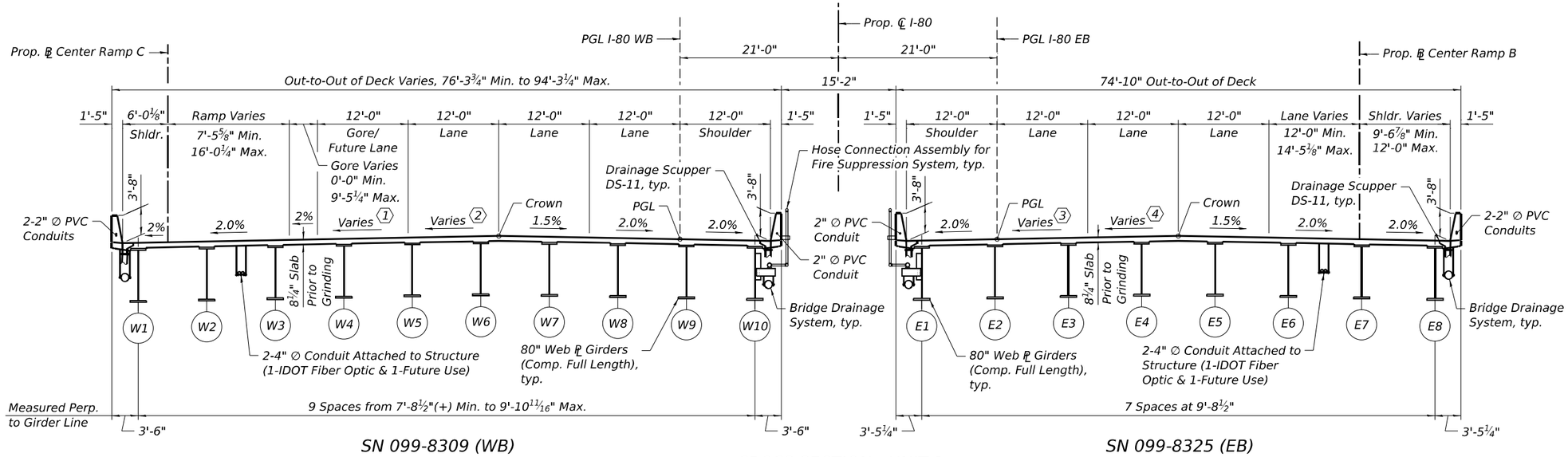


SN 099-8309 (WB)

SN 099-8325 (EB)

## CROSS SECTION - UNIT 1

(Looking East)

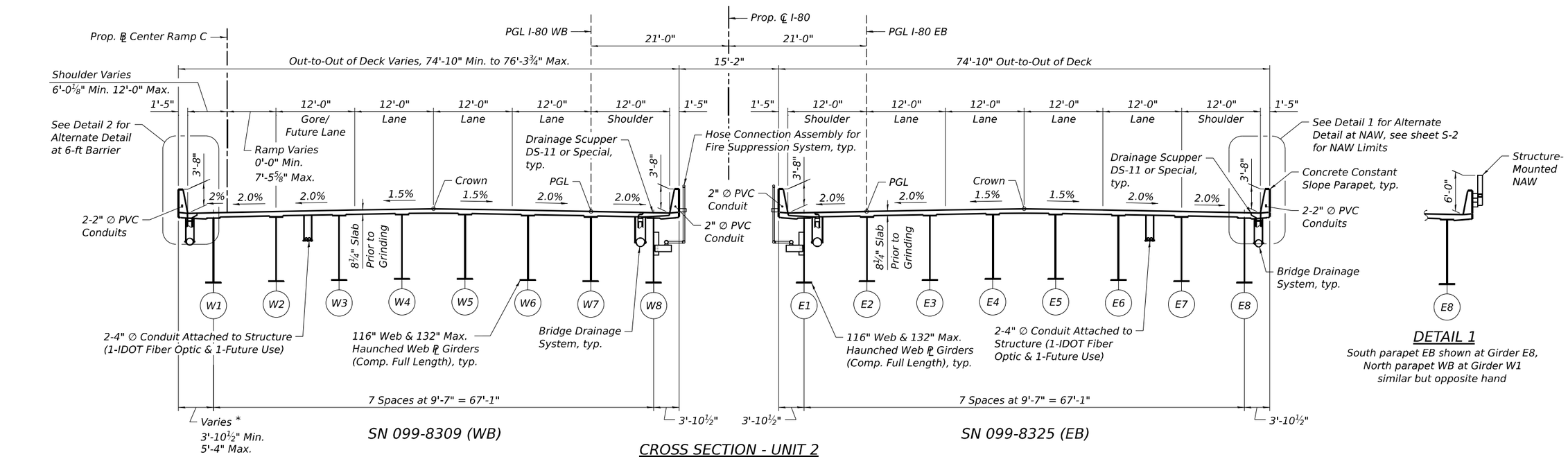


SN 099-8309 (WB)

SN 099-8325 (EB)

## CROSS SECTION - UNIT 2

(Looking East)

## DETAIL 1

South parapet EB shown at Girder E8, North parapet WB at Girder W1 similar but opposite hand

## CROSS SLOPE TRANSITION DATA

Note: Positive (+) slopes upward from Lt.-to-Rt., Negative (-) slopes downward from Lt.-to-Rt.

1. Varies from -2.00% at Sta. 37+67 to +2.00% at Sta. 39+55.
2. Varies from -2.00% at Sta. 37+67 to +1.50% at Sta. 39+32.
3. Varies from -2.00% at Sta. 37+63 to +2.00% at Sta. 39+51.
4. Varies from -2.00% at Sta. 37+63 to +1.50% at Sta. 39+28.

* Unit 2 WB deck is flared from Sta. 42+01.21 (℄ Pier 2 WB) to Sta. 42+28.24.

## LANE TAPERS STATION TABLE

| Location | Begin Taper Sta. | End Taper Sta. |
|---|---|---|
| Lt. Shldr. WB | 42+28.24 | 43+40.42 |
| Ramp WB | 40+40.42 | 43+40.42 |
| Gore WB | Bridge Omission | 40+40.42 |
| Lane EB | Bridge Omission | 39+16.67 |
| Rt. Shldr. EB | Bridge Omission | 39+16.67 |

## NOTES:

1. Scuppers draining towards the West will be DS-11 draining outboard of the fascia girders, scuppers draining towards the East will be Special draining inboard of the fascia girders. Examples of each configuration are shown in the same section for information only.
2. Cross Section - Unit 2 WB shows maximum overhang near Pier 2 WB.

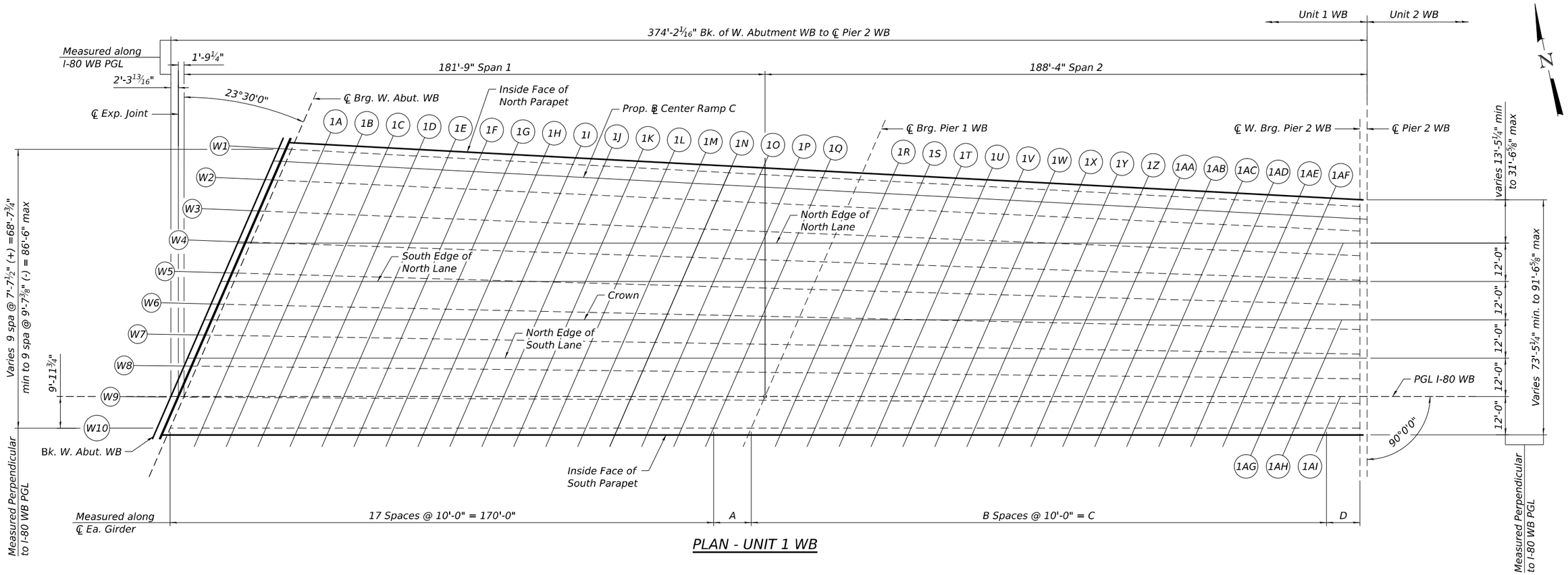


## PLAN - UNIT 1 WB

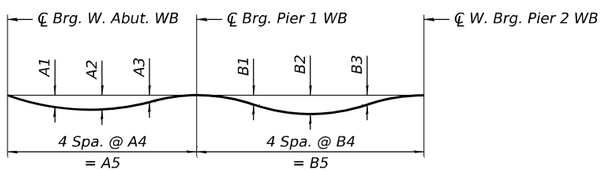


## DEAD LOAD DEFLECTION DIAGRAM

(Includes weight of concrete only.)

*Note:*
The above deflections are not to be used in the field if the engineer is working from the grade elevations adjusted for dead load deflections and grinding as shown on sheets S-8 to S-13.

| Girder | DEAD LOAD DEFLECTIONS | | | | | | | | | |
|---|---|---|---|---|---|---|---|---|---|---|
| | Span 1 | | | | | Span 2 | | | | |
| | A1 | A2 | A3 | A4 | A5 | B1 | B2 | B3 | B4 | B5 |
| W1 | 2 1/2" | 3" | 1 1/2" | ±44'-5 5/8" | 177'-10 9/16" | 1/8" | 3/4" | 7/8" | ±39'-2 3/8" | 156'-9 5/8" |
| W2 | 2 5/8" | 3 1/8" | 1 1/2" | ±44'-7" | 178'-3 3/4" | 1/8" | 7/8" | 7/8" | ±40'-1 3/8" | 160'-5 3/4" |
| W3 | 2 1/2" | 3" | 1 3/8" | 44'-8 1/4" | 178'-9" | 1/8" | 1" | 1" | 41'-0 1/2" | 164'-2" |
| W4 | 2 3/8" | 2 7/8" | 1 1/4" | ±44'-9 1/2" | 179'-2 3/16" | 1/4" | 1 1/8" | 1 1/8" | ±41'-11 5/8" | 167'-10 7/16" |
| W5 | 2 1/4" | 2 5/8" | 1 1/4" | ±44'-10 7/8" | 179'-7 3/8" | 3/8" | 1 1/4" | 1 1/4" | ±42-10 3/4" | 171'-7 1/16" |
| W6 | 2 1/4" | 2 5/8" | 1 1/8" | ±45'-0 1/8" | 180'-0 9/16" | 1/2" | 1 1/2" | 1 3/8" | ±43'-10" | 175'-3 7/8" |
| W7 | 2 1/4" | 2 5/8" | 1 1/8" | ±45'-1 3/8" | 180'-5 11/16" | 5/8" | 1 3/4" | 1 5/8" | ±44'-9 1/4" | 179'-0 13/16" |
| W8 | 2 3/8" | 2 3/4" | 1 1/8" | ±45'-2 3/4" | 180-10 13/16" | 3/4" | 2 1/8" | 2" | ±45'-8 1/2" | 182'-9 15/16" |
| W9 | 2 3/8" | 2 3/4" | 1 1/8" | ±45'-4" | 181'-3 15/16" | 1" | 2 5/8" | 2 1/4" | ±46'-7 3/4" | 186'-7 1/4" |
| W10 | 2 1/4" | 2 1/2" | 1" | 45'-5 1/4" | 181'-9" | 1 1/4" | 3" | 2 5/8" | ±47'-7 1/8" | 190'-4 11/16" |

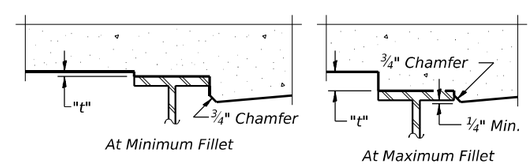


To determine "t": After all structural steel has been erected, elevations of the top flanges of the beams shall be taken at intervals shown on sheets S-8 to S-13. These elevations subtracted from the "Theoretical Grade Elevations Adjusted for Dead Load Deflection and Grinding" shown on sheets S-8 to S-13, minus the initial slab thickness prior to grinding, equals the fillet heights "t" above top flange of beams.

The slab is to be ground after curing to achieve smoothness, but the slab is not to be ground to elevations below the "Theoretical Grade Elevations" shown below. For grinding the deck, see Special Provisions.

## FILLET HEIGHTS

## TOP OF SLAB DIMENSIONS TABLE - UNIT 1 WB

| Girder | A | B | C | D |
|---|---|---|---|---|
| W1 | 7'-10 9/16" | 15 | 150'-0" | 6'-9 5/8" |
| W2 | 8'-3 3/4" | 15 | 150'-0" | 10'-5 3/4" |
| W3 | 8'-9" | 15 | 150'-0" | 14'-2" |
| W4 | 9'-2 3/16" | 16 | 160'-0" | 7'-10 7/16" |
| W5 | 9'-7 3/8" | 16 | 160'-0" | 11'-7 1/16" |
| W6 | 10'-0 9/16" | 17 | 170'-0" | 5'-3 7/8" |
| W7 | 10'-5 11/16" | 17 | 170'-0" | 9'-0 13/16" |
| W8 | 10'-10 13/16" | 17 | 170'-0" | 12'-9 15/16" |
| W9 | 11'-3 15/16" | 18 | 180'-0" | 6'-7 1/4" |
| W10 | 11'-9" | 18 | 180'-0" | 10'-4 11/16" |

## NOTES:

1. The dead load deflections shown in the diagram and used for fillet height determination are based on the Deck Pouring Sequence shown on sheet S-48.
2. If the Contractor elects to use a different pour placement/hardening schedule, then the deflections and fillet heights shall be re-calculated.
3. The cost of re-calculating deflections and adjusting fillet heights shall be included in the cost of Concrete Superstructure.
4. Up to 1/4 inch to be ground off the bridge deck and the bridge approach slabs. The Profile Grade shows the final grade after grinding.

# FOR INFORMATION ONLY


WSP USA Inc.
30 N. LASALLE STREET
SUITE 4200
CHICAGO, IL 60602
TEL: (312) 782-8150
FAX: (312) 782-1684


| | | | |
|---|---|---|---|
| USER NAME = USCP702533 | DESIGNED - LAS | REVISED - | |
| | CHECKED - TB | REVISED - | |
| PLOT SCALE = 32.0000 ' / in. | DRAWN - GM | REVISED - | |
| PLOT DATE = 10/11/2024 | CHECKED - LAS | REVISED - | |

**STATE OF ILLINOIS**
**DEPARTMENT OF TRANSPORTATION**

**TOP OF SLAB ELEVATION PLAN - UNIT 1 WB**
**STRUCTURE NUMBER 099-8309 WB AND 099-8325 EB**

SHEET S-7 OF S-87 SHEETS

| F.A.I RTE. | SECTION | COUNTY | TOTAL SHEETS | SHEET NO. |
|---|---|---|---|---|
| I-80 | (99-3DEFP) HF 23 | WILL | 89 | 9 |
| | | CONTRACT NO. 62W52 | | |
| | ILLINOIS | FED. AID PROJECT | | |


MODEL: Default
FILE NAME: pw://transystems-pw.bentley.com:transyscorp-pw1-hosted/Documents/Projects_2018/C-H401/40118002/03-WSP/CAD/62W52-SF-3/Sheets/0998309-62W52-S007-DFW101.dgn

## INSIDE FACE OF NORTH PARAPET - WB

| Location | Station | Offset | Theoretical Grade Elevations | Theoretical Grade Elevations Adjusted for Dead Load Deflection and Grinding |
|---|---|---|---|---|
| BK. W. ABUT. WB | 38+61.38 | -79.55 | 596.88 | 596.90 |
| ℄ EXP. JT. | 38+63.12 | -79.46 | 596.92 | 596.94 |
| ℄ BRG. W. ABUT. WB | 38+65.39 | -79.34 | 596.96 | 596.98 |
| 1A | 38+75.37 | -78.80 | 597.15 | 597.11 |
| 1B | 38+85.36 | -78.27 | 597.33 | 597.24 |
| 1C | 38+95.34 | -77.74 | 597.51 | 597.37 |
| 1D | 39+05.33 | -77.21 | 597.68 | 597.51 |
| 1E | 39+15.32 | -76.68 | 597.86 | 597.65 |
| 1F | 39+25.30 | -76.14 | 598.02 | 597.80 |
| 1G | 39+35.29 | -75.61 | 598.20 | 597.96 |
| 1H | 39+45.27 | -75.08 | 598.38 | 598.14 |
| 1I | 39+55.26 | -74.55 | 598.56 | 598.32 |
| 1J | 39+65.24 | -74.02 | 598.77 | 598.56 |
| 1K | 39+75.23 | -73.48 | 598.96 | 598.78 |
| 1L | 39+85.22 | -72.95 | 599.16 | 599.01 |
| 1M | 39+95.20 | -72.42 | 599.35 | 599.24 |
| 1N | 40+05.19 | -71.89 | 599.54 | 599.46 |
| 1O | 40+15.17 | -71.36 | 599.72 | 599.67 |
| 1P | 40+25.16 | -70.82 | 599.90 | 599.88 |
| 1Q | 40+35.14 | -70.29 | 600.07 | 600.08 |
| ℄ BRG. PIER 1 WB | 40+43.23 | -69.86 | 600.21 | 600.23 |
| 1R | 40+53.21 | -69.33 | 600.38 | 600.40 |
| 1S | 40+63.20 | -68.80 | 600.54 | 600.57 |
| 1T | 40+73.18 | -68.27 | 600.70 | 600.72 |
| 1U | 40+83.17 | -67.73 | 600.86 | 600.87 |
| 1V | 40+93.16 | -67.20 | 601.01 | 601.01 |
| 1W | 41+03.14 | -66.67 | 601.15 | 601.14 |
| 1X | 41+13.13 | -66.14 | 601.30 | 601.27 |
| 1Y | 41+23.11 | -65.60 | 601.44 | 601.39 |
| 1Z | 41+33.10 | -65.07 | 601.57 | 601.52 |
| 1AA | 41+43.08 | -64.54 | 601.70 | 601.65 |
| 1AB | 41+53.07 | -64.01 | 601.83 | 601.78 |
| 1AC | 41+63.06 | -63.48 | 601.95 | 601.91 |
| 1AD | 41+73.04 | -62.94 | 602.07 | 602.04 |
| 1AE | 41+83.03 | -62.41 | 602.19 | 602.17 |
| 1AF | 41+93.01 | -61.88 | 602.30 | 602.31 |
| 1AG | - | - | - | - |
| 1AH | - | - | - | - |
| 1AI | - | - | - | - |
| ℄ W. BRG. PIER 2 WB | 41+98.96 | -61.56 | 602.37 | 602.39 |
| ℄ PIER 2 WB | 42+01.21 | -61.44 | 602.39 | 602.41 |

## GIRDER W1

| Location | Station | Offset | Theoretical Grade Elevations | Theoretical Grade Elevations Adjusted for Dead Load Deflection and Grinding |
|---|---|---|---|---|
| BK. W. ABUT. WB | 38+60.57 | -77.54 | 596.91 | 596.93 |
| ℄ EXP. JT. | 38+62.31 | -77.45 | 596.94 | 596.96 |
| ℄ BRG. W. ABUT. WB | 38+64.57 | -77.33 | 596.98 | 597.01 |
| 1A | 38+74.56 | -76.79 | 597.17 | 597.14 |
| 1B | 38+84.55 | -76.26 | 597.36 | 597.27 |
| 1C | 38+94.53 | -75.73 | 597.54 | 597.40 |
| 1D | 39+04.52 | -75.20 | 597.71 | 597.54 |
| 1E | 39+14.50 | -74.66 | 597.88 | 597.68 |
| 1F | 39+24.49 | -74.13 | 598.05 | 597.82 |
| 1G | 39+34.48 | -73.60 | 598.22 | 597.98 |
| 1H | 39+44.46 | -73.06 | 598.41 | 598.17 |
| 1I | 39+54.45 | -72.53 | 598.59 | 598.35 |
| 1J | 39+64.43 | -72.00 | 598.79 | 598.58 |
| 1K | 39+74.42 | -71.46 | 598.99 | 598.81 |
| 1L | 39+84.40 | -70.93 | 599.18 | 599.04 |
| 1M | 39+94.39 | -70.40 | 599.37 | 599.26 |
| 1N | 40+04.38 | -69.86 | 599.56 | 599.48 |
| 1O | 40+14.36 | -69.33 | 599.74 | 599.70 |
| 1P | 40+24.35 | -68.80 | 599.92 | 599.91 |
| 1Q | 40+34.33 | -68.27 | 600.10 | 600.10 |
| ℄ BRG. PIER 1 WB | 40+42.37 | -67.84 | 600.24 | 600.26 |
| 1R | 40+52.36 | -67.30 | 600.40 | 600.43 |
| 1S | 40+62.35 | -66.77 | 600.57 | 600.60 |
| 1T | 40+72.33 | -66.24 | 600.73 | 600.75 |
| 1U | 40+82.32 | -65.70 | 600.88 | 600.90 |
| 1V | 40+92.30 | -65.17 | 601.04 | 601.04 |
| 1W | 41+02.29 | -64.64 | 601.18 | 601.17 |
| 1X | 41+12.28 | -64.10 | 601.33 | 601.30 |
| 1Y | 41+22.26 | -63.57 | 601.47 | 601.42 |
| 1Z | 41+32.25 | -63.04 | 601.60 | 601.55 |
| 1AA | 41+42.23 | -62.51 | 601.73 | 601.68 |
| 1AB | 41+52.22 | -61.97 | 601.86 | 601.81 |
| 1AC | 41+62.20 | -61.44 | 601.99 | 601.94 |
| 1AD | 41+72.19 | -60.91 | 602.11 | 602.07 |
| 1AE | 41+82.18 | -60.37 | 602.22 | 602.21 |
| 1AF | 41+92.16 | -59.84 | 602.33 | 602.34 |
| 1AG | - | - | - | - |
| 1AH | - | - | - | - |
| 1AI | - | - | - | - |
| ℄ W. BRG. PIER 2 WB | 41+98.96 | -59.48 | 602.41 | 602.43 |
| ℄ PIER 2 WB | 42+01.21 | -59.36 | 602.43 | 602.45 |

## PROP. BL CENTER RAMP C

| Location | Station | Offset | Theoretical Grade Elevations | Theoretical Grade Elevations Adjusted for Dead Load Deflection and Grinding |
|---|---|---|---|---|
| BK. W. ABUT. WB | 38+59.01 | -73.71 | 596.96 | 596.98 |
| ℄ EXP. JT. | 38+60.75 | -73.61 | 596.99 | 597.01 |
| ℄ BRG. W. ABUT. WB | 38+63.01 | -73.49 | 597.03 | 597.05 |
| 1A | 38+73.00 | -72.96 | 597.22 | 597.19 |
| 1B | 38+82.98 | -72.43 | 597.41 | 597.32 |
| 1C | 38+92.97 | -71.90 | 597.59 | 597.45 |
| 1D | 39+02.96 | -71.37 | 597.76 | 597.59 |
| 1E | 39+12.94 | -70.84 | 597.94 | 597.73 |
| 1F | 39+22.93 | -70.31 | 598.10 | 597.88 |
| 1G | 39+32.91 | -69.78 | 598.27 | 598.03 |
| 1H | 39+42.90 | -69.25 | 598.46 | 598.22 |
| 1I | 39+52.89 | -68.72 | 598.64 | 598.40 |
| 1J | 39+62.87 | -68.19 | 598.84 | 598.63 |
| 1K | 39+72.86 | -67.66 | 599.04 | 598.85 |
| 1L | 39+82.84 | -67.14 | 599.23 | 599.08 |
| 1M | 39+92.83 | -66.61 | 599.42 | 599.31 |
| 1N | 40+02.81 | -66.08 | 599.61 | 599.53 |
| 1O | 40+12.80 | -65.55 | 599.79 | 599.75 |
| 1P | 40+22.79 | -65.02 | 599.97 | 599.96 |
| 1Q | 40+32.77 | -64.49 | 600.15 | 600.15 |
| ℄ BRG. PIER 1 WB | 40+40.72 | -64.06 | 600.29 | 600.31 |
| 1R | 40+50.70 | -63.53 | 600.45 | 600.48 |
| 1S | 40+60.69 | -63.00 | 600.62 | 600.65 |
| 1T | 40+70.67 | -62.47 | 600.78 | 600.80 |
| 1U | 40+80.66 | -61.94 | 600.93 | 600.95 |
| 1V | 40+90.64 | -61.41 | 601.09 | 601.09 |
| 1W | 41+00.63 | -60.88 | 601.24 | 601.22 |
| 1X | 41+10.62 | -60.35 | 601.38 | 601.35 |
| 1Y | 41+20.60 | -59.82 | 601.52 | 601.48 |
| 1Z | 41+30.59 | -59.29 | 601.66 | 601.61 |
| 1AA | 41+40.57 | -58.76 | 601.79 | 601.74 |
| 1AB | 41+50.56 | -58.23 | 601.92 | 601.86 |
| 1AC | 41+60.55 | -57.71 | 602.04 | 602.00 |
| 1AD | 41+70.53 | -57.18 | 602.16 | 602.13 |
| 1AE | 41+80.52 | -56.65 | 602.28 | 602.26 |
| 1AF | 41+90.50 | -56.12 | 602.39 | 602.40 |
| 1AG | - | - | - | - |
| 1AH | - | - | - | - |
| 1AI | - | - | - | - |
| ℄ W. BRG. PIER 2 WB | 41+98.96 | -55.67 | 602.48 | 602.50 |
| ℄ PIER 2 WB | 42+01.21 | -55.55 | 602.51 | 602.53 |

### NOTES:

1. All Elevations and Offsets are in feet.
2. Offsets are measured with respect to the I-80 WB PGL. Negative offsets are left and positive are right of the PGL.

# FOR INFORMATION ONLY

WSP USA Inc.
30 N. LASALLE STREET
SUITE 4200
CHICAGO, IL 60602
TEL: (312) 782-8150
FAX: (312) 782-1684

| | | | |
|---|---|---|---|
| USER NAME = USCP702533 | DESIGNED - LAS | REVISED - | |
| | CHECKED - TB | REVISED - | |
| PLOT SCALE = 8:0 ':" / in. | DRAWN - GM | REVISED - | |
| PLOT DATE = 10/11/2024 | CHECKED - LAS | REVISED - | |

**STATE OF ILLINOIS**
**DEPARTMENT OF TRANSPORTATION**

**TOP OF SLAB ELEVATIONS - UNIT 1 WB**
**STRUCTURE NUMBER 099-8309 WB AND 099-8325 EB**

SHEET S-8 OF S-87 SHEETS

| F.A.I RTE. | SECTION | COUNTY | TOTAL SHEETS | SHEET NO. |
|---|---|---|---|---|
| I-80 | (99-3DEFP) HF 23 | WILL | 89 | 10 |
| | | CONTRACT NO. 62W52 | | |
| | ILLINOIS | FED. AID PROJECT | | |

MODEL: Default
FILE NAME: pw://transystems-pw.bentley.com:transyscorp-pw1-hosted/Documents/Projects_2018/CH401/401180022/03-WSP/CAD/62W52-SF-3/Sheets/0998309-62W52-S008-DEW102.dgn

## GIRDER W2

| Location | Station | Offset | Theoretical Grade Elevations | Theoretical Grade Elevations Adjusted for Dead Load Deflection and Grinding |
|---|---|---|---|---|
| BK. W. ABUT. WB | 38+56.53 | -67.82 | 597.03 | 597.05 |
| ℄ EXP. JT. | 38+58.27 | -67.74 | 597.06 | 597.08 |
| ℄ BRG. W. ABUT. WB | 38+60.54 | -67.63 | 597.11 | 597.13 |
| 1A | 38+70.53 | -67.17 | 597.29 | 597.26 |
| 1B | 38+80.52 | -66.70 | 597.48 | 597.39 |
| 1C | 38+90.51 | -66.23 | 597.66 | 597.52 |
| 1D | 39+00.50 | -65.76 | 597.83 | 597.65 |
| 1E | 39+10.48 | -65.29 | 598.01 | 597.79 |
| 1F | 39+20.47 | -64.82 | 598.17 | 597.94 |
| 1G | 39+30.46 | -64.36 | 598.34 | 598.09 |
| 1H | 39+40.45 | -63.89 | 598.52 | 598.28 |
| 1I | 39+50.44 | -63.42 | 598.70 | 598.45 |
| 1J | 39+60.43 | -62.95 | 598.89 | 598.68 |
| 1K | 39+70.42 | -62.48 | 599.09 | 598.91 |
| 1L | 39+80.41 | -62.01 | 599.29 | 599.14 |
| 1M | 39+90.40 | -61.55 | 599.48 | 599.36 |
| 1N | 40+00.39 | -61.08 | 599.67 | 599.59 |
| 1O | 40+10.38 | -60.61 | 599.85 | 599.80 |
| 1P | 40+20.36 | -60.14 | 600.03 | 600.01 |
| 1Q | 40+30.35 | -59.67 | 600.21 | 600.21 |
| ℄ BRG. PIER 1 WB | 40+38.66 | -59.28 | 600.35 | 600.37 |
| 1R | 40+48.65 | -58.81 | 600.52 | 600.54 |
| 1S | 40+58.64 | -58.35 | 600.68 | 600.71 |
| 1T | 40+68.63 | -57.88 | 600.84 | 600.86 |
| 1U | 40+78.62 | -57.41 | 601.00 | 601.01 |
| 1V | 40+88.61 | -56.94 | 601.15 | 601.15 |
| 1W | 40+98.60 | -56.47 | 601.30 | 601.28 |
| 1X | 41+08.58 | -56.00 | 601.44 | 601.41 |
| 1Y | 41+18.57 | -55.54 | 601.58 | 601.53 |
| 1Z | 41+28.56 | -55.07 | 601.72 | 601.66 |
| 1AA | 41+38.55 | -54.60 | 601.85 | 601.79 |
| 1AB | 41+48.54 | -54.13 | 601.98 | 601.91 |
| 1AC | 41+58.53 | -53.66 | 602.10 | 602.05 |
| 1AD | 41+68.52 | -53.19 | 602.22 | 602.18 |
| 1AE | 41+78.51 | -52.73 | 602.34 | 602.31 |
| 1AF | 41+88.50 | -52.26 | 602.45 | 602.45 |
| 1AG | - | - | - | - |
| 1AH | - | - | - | - |
| 1AI | - | - | - | - |
| ℄ W. BRG. PIER 2 WB | 41+98.96 | -51.77 | 602.56 | 602.58 |
| ℄ PIER 2 WB | 42+01.21 | -51.66 | 602.59 | 602.61 |

## GIRDER W3

| Location | Station | Offset | Theoretical Grade Elevations | Theoretical Grade Elevations Adjusted for Dead Load Deflection and Grinding |
|---|---|---|---|---|
| BK. W. ABUT. WB | 38+52.31 | -58.10 | 597.15 | 597.17 |
| ℄ EXP. JT. | 38+54.05 | -58.03 | 597.18 | 597.20 |
| ℄ BRG. W. ABUT. WB | 38+56.33 | -57.94 | 597.22 | 597.24 |
| 1A | 38+66.32 | -57.53 | 597.41 | 597.38 |
| 1B | 38+76.31 | -57.13 | 597.60 | 597.51 |
| 1C | 38+86.30 | -56.73 | 597.78 | 597.64 |
| 1D | 38+96.29 | -56.32 | 597.95 | 597.78 |
| 1E | 39+06.29 | -55.92 | 598.13 | 597.92 |
| 1F | 39+16.28 | -55.51 | 598.29 | 598.07 |
| 1G | 39+26.27 | -55.11 | 598.46 | 598.22 |
| 1H | 39+36.26 | -54.70 | 598.63 | 598.40 |
| 1I | 39+46.25 | -54.30 | 598.81 | 598.58 |
| 1J | 39+56.25 | -53.89 | 598.99 | 598.79 |
| 1K | 39+66.24 | -53.49 | 599.19 | 599.02 |
| 1L | 39+76.23 | -53.08 | 599.39 | 599.25 |
| 1M | 39+86.22 | -52.68 | 599.58 | 599.47 |
| 1N | 39+96.21 | -52.27 | 599.77 | 599.69 |
| 1O | 40+06.20 | -51.87 | 599.95 | 599.91 |
| 1P | 40+16.20 | -51.46 | 600.13 | 600.12 |
| 1Q | 40+26.19 | -51.06 | 600.31 | 600.31 |
| ℄ BRG. PIER 1 WB | 40+34.93 | -50.70 | 600.46 | 600.48 |
| 1R | 40+44.92 | -50.30 | 600.63 | 600.65 |
| 1S | 40+54.91 | -49.89 | 600.79 | 600.82 |
| 1T | 40+64.91 | -49.49 | 600.95 | 600.97 |
| 1U | 40+74.90 | -49.08 | 601.11 | 601.12 |
| 1V | 40+84.89 | -48.68 | 601.26 | 601.25 |
| 1W | 40+94.88 | -48.27 | 601.41 | 601.38 |
| 1X | 41+04.87 | -47.87 | 601.55 | 601.51 |
| 1Y | 41+14.87 | -47.46 | 601.69 | 601.64 |
| 1Z | 41+24.86 | -47.06 | 601.83 | 601.76 |
| 1AA | 41+34.85 | -46.65 | 601.96 | 601.89 |
| 1AB | 41+44.84 | -46.25 | 602.09 | 602.02 |
| 1AC | 41+54.83 | -45.84 | 602.21 | 602.15 |
| 1AD | 41+64.82 | -45.44 | 602.34 | 602.28 |
| 1AE | 41+74.82 | -45.04 | 602.45 | 602.42 |
| 1AF | 41+84.81 | -44.63 | 602.56 | 602.55 |
| 1AG | - | - | - | - |
| 1AH | - | - | - | - |
| 1AI | - | - | - | - |
| ℄ W. BRG. PIER 2 WB | 41+98.96 | -44.06 | 602.72 | 602.74 |
| ℄ PIER 2 WB | 42+01.21 | -43.97 | 602.74 | 602.76 |

## NORTH EDGE OF NORTH LANE - WB

| Location | Station | Offset | Theoretical Grade Elevations | Theoretical Grade Elevations Adjusted for Dead Load Deflection and Grinding |
|---|---|---|---|---|
| BK. W. ABUT. WB | 38+47.91 | -48.00 | 597.27 | 597.29 |
| ℄ EXP. JT. | 38+50.23 | -48.00 | 597.31 | 597.33 |
| ℄ BRG. W. ABUT. WB | 38+52.00 | -48.00 | 597.34 | 597.36 |
| 1A | 38+62.00 | -48.00 | 597.52 | 597.49 |
| 1B | 38+72.00 | -48.00 | 597.70 | 597.62 |
| 1C | 38+82.00 | -48.00 | 597.88 | 597.75 |
| 1D | 38+92.00 | -48.00 | 598.05 | 597.88 |
| 1E | 39+02.00 | -48.00 | 598.21 | 598.02 |
| 1F | 39+12.00 | -48.00 | 598.38 | 598.16 |
| 1G | 39+22.00 | -48.00 | 598.54 | 598.31 |
| 1H | 39+32.00 | -48.00 | 598.69 | 598.47 |
| 1I | 39+42.00 | -48.00 | 598.87 | 598.64 |
| 1J | 39+52.00 | -48.00 | 599.04 | 598.85 |
| 1K | 39+62.00 | -48.00 | 599.22 | 599.06 |
| 1L | 39+72.00 | -48.00 | 599.41 | 599.28 |
| 1M | 39+82.00 | -48.00 | 599.60 | 599.50 |
| 1N | 39+92.00 | -48.00 | 599.78 | 599.71 |
| 1O | 40+02.00 | -48.00 | 599.96 | 599.92 |
| 1P | 40+12.00 | -48.00 | 600.13 | 600.12 |
| 1Q | 40+22.00 | -48.00 | 600.30 | 600.31 |
| ℄ BRG. PIER 1 WB | 40+33.75 | -48.00 | 600.49 | 600.52 |
| 1R | 40+43.75 | -48.00 | 600.65 | 600.68 |
| 1S | 40+53.75 | -48.00 | 600.81 | 600.84 |
| 1T | 40+63.75 | -48.00 | 600.96 | 600.98 |
| 1U | 40+73.75 | -48.00 | 601.11 | 601.12 |
| 1V | 40+83.75 | -48.00 | 601.26 | 601.25 |
| 1W | 40+93.75 | -48.00 | 601.40 | 601.37 |
| 1X | 41+03.75 | -48.00 | 601.54 | 601.49 |
| 1Y | 41+13.75 | -48.00 | 601.67 | 601.60 |
| 1Z | 41+23.75 | -48.00 | 601.80 | 601.72 |
| 1AA | 41+33.75 | -48.00 | 601.92 | 601.84 |
| 1AB | 41+43.75 | -48.00 | 602.04 | 601.96 |
| 1AC | 41+53.75 | -48.00 | 602.16 | 602.08 |
| 1AD | 41+63.75 | -48.00 | 602.27 | 602.21 |
| 1AE | 41+73.75 | -48.00 | 602.38 | 602.33 |
| 1AF | 41+83.75 | -48.00 | 602.49 | 602.46 |
| 1AG | 41+93.75 | -48.00 | 602.59 | 602.59 |
| 1AH | - | - | - | - |
| 1AI | - | - | - | - |
| ℄ W. BRG. PIER 2 WB | 41+98.96 | -48.00 | 602.64 | 602.66 |
| ℄ PIER 2 WB | 42+01.21 | -48.00 | 602.66 | 602.68 |

### NOTES:

1. All Elevations and Offsets are in feet.
2. Offsets are measured with respect to the I-80 WB PGL. Negative offsets are left and positive are right of the PGL.

# FOR INFORMATION ONLY

WSP USA Inc.
30 N. LASALLE STREET
SUITE 4200
CHICAGO, IL 60602
TEL: (312) 782-8150
FAX: (312) 782-1684

| | | | |
|---|---|---|---|
| USER NAME = USCP702533 | DESIGNED - LAS | REVISED - | |
| | CHECKED - TB | REVISED - | |
| PLOT SCALE = 8:0 ':" / in. | DRAWN - GM | REVISED - | |
| PLOT DATE = 10/11/2024 | CHECKED - LAS | REVISED - | |

**STATE OF ILLINOIS**
**DEPARTMENT OF TRANSPORTATION**

**TOP OF SLAB ELEVATIONS - UNIT 1 WB**
**STRUCTURE NUMBER 099-8309 WB AND 099-8325 EB**

SHEET S-9 OF S-87 SHEETS

| F.A.I RTE. | SECTION | COUNTY | TOTAL SHEETS | SHEET NO. |
|---|---|---|---|---|
| I-80 | (99-3DEFP) HF 23 | WILL | 89 | 11 |
| | | CONTRACT NO. 62W52 | | |
| | ILLINOIS | FED. AID PROJECT | | |

MODEL: Default
FILE NAME: pw://transystems-pw.bentley.com:transyscorp-pw1-hosted/Documents/Projects_2018/CH401/401180022/03-WSP/CAD/62W52-SF-3/Sheets/0998309-62W52-S009-DEW103.dgn

## GIRDER W4

| Location | Station | Offset | Theoretical Grade Elevations | Theoretical Grade Elevations Adjusted for Dead Load Deflection and Grinding |
|---|---|---|---|---|
| BK. W. ABUT. WB | 38+48.08 | -48.38 | 597.26 | 597.28 |
| ℄ EXP. JT. | 38+49.83 | -48.32 | 597.30 | 597.32 |
| ℄ BRG. W. ABUT. WB | 38+52.11 | -48.25 | 597.34 | 597.36 |
| 1A | 38+62.11 | -47.90 | 597.53 | 597.49 |
| 1B | 38+72.10 | -47.56 | 597.71 | 597.62 |
| 1C | 38+82.09 | -47.22 | 597.88 | 597.76 |
| 1D | 38+92.09 | -46.87 | 598.06 | 597.89 |
| 1E | 39+02.08 | -46.53 | 598.23 | 598.03 |
| 1F | 39+12.08 | -46.19 | 598.40 | 598.18 |
| 1G | 39+22.07 | -45.85 | 598.56 | 598.34 |
| 1H | 39+32.07 | -45.50 | 598.73 | 598.51 |
| 1I | 39+42.06 | -45.16 | 598.92 | 598.69 |
| 1J | 39+52.05 | -44.82 | 599.10 | 598.91 |
| 1K | 39+62.05 | -44.47 | 599.29 | 599.13 |
| 1L | 39+72.04 | -44.13 | 599.49 | 599.36 |
| 1M | 39+82.04 | -43.79 | 599.68 | 599.58 |
| 1N | 39+92.03 | -43.45 | 599.87 | 599.80 |
| 1O | 40+02.02 | -43.10 | 600.06 | 600.02 |
| 1P | 40+12.02 | -42.76 | 600.24 | 600.22 |
| 1Q | 40+22.01 | -42.42 | 600.41 | 600.42 |
| ℄ BRG. PIER 1 WB | 40+31.19 | -42.10 | 600.57 | 600.59 |
| 1R | 40+41.19 | -41.76 | 600.74 | 600.76 |
| 1S | 40+51.18 | -41.42 | 600.90 | 600.93 |
| 1T | 40+61.17 | -41.07 | 601.06 | 601.08 |
| 1U | 40+71.17 | -40.73 | 601.22 | 601.22 |
| 1V | 40+81.16 | -40.39 | 601.37 | 601.36 |
| 1W | 40+91.16 | -40.04 | 601.52 | 601.49 |
| 1X | 41+01.15 | -39.70 | 601.67 | 601.62 |
| 1Y | 41+11.14 | -39.36 | 601.81 | 601.74 |
| 1Z | 41+21.14 | -39.02 | 601.94 | 601.87 |
| 1AA | 41+31.13 | -38.67 | 602.08 | 601.99 |
| 1AB | 41+41.13 | -38.33 | 602.20 | 602.12 |
| 1AC | 41+51.12 | -37.99 | 602.33 | 602.25 |
| 1AD | 41+61.11 | -37.64 | 602.45 | 602.38 |
| 1AE | 41+71.11 | -37.30 | 602.57 | 602.52 |
| 1AF | 41+81.10 | -36.96 | 602.68 | 602.65 |
| 1AG | 41+91.10 | -36.62 | 602.79 | 602.79 |
| 1AH | - | - | - | - |
| 1AI | - | - | - | - |
| ℄ W. BRG. PIER 2 WB | 41+98.96 | -36.35 | 602.87 | 602.89 |
| ℄ PIER 2 WB | 42+01.21 | -36.27 | 602.89 | 602.91 |

## SOUTH EDGE OF NORTH LANE - WB

| Location | Station | Offset | Theoretical Grade Elevations | Theoretical Grade Elevations Adjusted for Dead Load Deflection and Grinding |
|---|---|---|---|---|
| BK. W. ABUT. WB | 38+42.69 | -36.00 | 597.12 | 597.14 |
| ℄ EXP. JT. | 38+45.01 | -36.00 | 597.17 | 597.19 |
| ℄ BRG. W. ABUT. WB | 38+46.78 | -36.00 | 597.21 | 597.23 |
| 1A | 38+56.78 | -36.00 | 597.42 | 597.39 |
| 1B | 38+66.78 | -36.00 | 597.63 | 597.55 |
| 1C | 38+76.78 | -36.00 | 597.83 | 597.71 |
| 1D | 38+86.78 | -36.00 | 598.03 | 597.87 |
| 1E | 38+96.78 | -36.00 | 598.22 | 598.04 |
| 1F | 39+06.78 | -36.00 | 598.41 | 598.21 |
| 1G | 39+16.78 | -36.00 | 598.60 | 598.39 |
| 1H | 39+26.78 | -36.00 | 598.78 | 598.57 |
| 1I | 39+36.78 | -36.00 | 598.97 | 598.76 |
| 1J | 39+46.78 | -36.00 | 599.17 | 598.99 |
| 1K | 39+56.78 | -36.00 | 599.36 | 599.21 |
| 1L | 39+66.78 | -36.00 | 599.55 | 599.43 |
| 1M | 39+76.78 | -36.00 | 599.74 | 599.65 |
| 1N | 39+86.78 | -36.00 | 599.93 | 599.86 |
| 1O | 39+96.78 | -36.00 | 600.11 | 600.07 |
| 1P | 40+06.78 | -36.00 | 600.28 | 600.27 |
| 1Q | 40+16.78 | -36.00 | 600.45 | 600.46 |
| ℄ BRG. PIER 1 WB | 40+28.53 | -36.00 | 600.65 | 600.67 |
| 1R | 40+38.53 | -36.00 | 600.81 | 600.83 |
| 1S | 40+48.53 | -36.00 | 600.97 | 600.99 |
| 1T | 40+58.53 | -36.00 | 601.13 | 601.14 |
| 1U | 40+68.53 | -36.00 | 601.28 | 601.27 |
| 1V | 40+78.53 | -36.00 | 601.42 | 601.40 |
| 1W | 40+88.53 | -36.00 | 601.57 | 601.53 |
| 1X | 40+98.53 | -36.00 | 601.70 | 601.64 |
| 1Y | 41+08.53 | -36.00 | 601.84 | 601.76 |
| 1Z | 41+18.53 | -36.00 | 601.97 | 601.88 |
| 1AA | 41+28.53 | -36.00 | 602.10 | 602.00 |
| 1AB | 41+38.53 | -36.00 | 602.22 | 602.12 |
| 1AC | 41+48.53 | -36.00 | 602.34 | 602.24 |
| 1AD | 41+58.53 | -36.00 | 602.45 | 602.37 |
| 1AE | 41+68.53 | -36.00 | 602.56 | 602.50 |
| 1AF | 41+78.53 | -36.00 | 602.67 | 602.63 |
| 1AG | 41+88.53 | -36.00 | 602.77 | 602.76 |
| 1AH | - | - | - | - |
| 1AI | - | - | - | - |
| ℄ W. BRG. PIER 2 WB | 41+98.96 | -36.00 | 602.88 | 602.90 |
| ℄ PIER 2 WB | 42+01.21 | -36.00 | 602.90 | 602.92 |

## GIRDER W5

| Location | Station | Offset | Theoretical Grade Elevations | Theoretical Grade Elevations Adjusted for Dead Load Deflection and Grinding |
|---|---|---|---|---|
| BK. W. ABUT. WB | 38+43.86 | -38.67 | 597.16 | 597.18 |
| ℄ EXP. JT. | 38+45.61 | -38.62 | 597.19 | 597.21 |
| ℄ BRG. W. ABUT. WB | 38+47.90 | -38.55 | 597.24 | 597.26 |
| 1A | 38+57.89 | -38.27 | 597.44 | 597.41 |
| 1B | 38+67.89 | -37.99 | 597.64 | 597.57 |
| 1C | 38+77.89 | -37.71 | 597.84 | 597.72 |
| 1D | 38+87.88 | -37.42 | 598.04 | 597.88 |
| 1E | 38+97.88 | -37.14 | 598.23 | 598.05 |
| 1F | 39+07.87 | -36.86 | 598.42 | 598.22 |
| 1G | 39+17.87 | -36.58 | 598.61 | 598.40 |
| 1H | 39+27.87 | -36.29 | 598.79 | 598.59 |
| 1I | 39+37.86 | -36.01 | 598.99 | 598.78 |
| 1J | 39+47.86 | -35.73 | 599.19 | 599.01 |
| 1K | 39+57.85 | -35.45 | 599.39 | 599.24 |
| 1L | 39+67.85 | -35.16 | 599.59 | 599.46 |
| 1M | 39+77.85 | -34.88 | 599.78 | 599.68 |
| 1N | 39+87.84 | -34.60 | 599.97 | 599.90 |
| 1O | 39+97.84 | -34.32 | 600.15 | 600.11 |
| 1P | 40+07.83 | -34.03 | 600.33 | 600.32 |
| 1Q | 40+17.83 | -33.75 | 600.50 | 600.51 |
| ℄ BRG. PIER 1 WB | 40+27.44 | -33.48 | 600.67 | 600.69 |
| 1R | 40+37.44 | -33.20 | 600.84 | 600.86 |
| 1S | 40+47.43 | -32.92 | 601.00 | 601.02 |
| 1T | 40+57.43 | -32.63 | 601.16 | 601.17 |
| 1U | 40+67.43 | -32.35 | 601.31 | 601.31 |
| 1V | 40+77.42 | -32.07 | 601.47 | 601.44 |
| 1W | 40+87.42 | -31.79 | 601.61 | 601.57 |
| 1X | 40+97.41 | -31.50 | 601.76 | 601.70 |
| 1Y | 41+07.41 | -31.22 | 601.90 | 601.82 |
| 1Z | 41+17.41 | -30.94 | 602.03 | 601.94 |
| 1AA | 41+27.40 | -30.66 | 602.16 | 602.07 |
| 1AB | 41+37.40 | -30.37 | 602.29 | 602.19 |
| 1AC | 41+47.39 | -30.09 | 602.41 | 602.32 |
| 1AD | 41+57.39 | -29.81 | 602.53 | 602.45 |
| 1AE | 41+67.39 | -29.53 | 602.65 | 602.59 |
| 1AF | 41+77.38 | -29.25 | 602.76 | 602.72 |
| 1AG | 41+87.38 | -28.96 | 602.87 | 602.86 |
| 1AH | - | - | - | - |
| 1AI | - | - | - | - |
| ℄ W. BRG. PIER 2 WB | 41+98.96 | -28.64 | 602.99 | 603.01 |
| ℄ PIER 2 WB | 42+01.21 | -28.57 | 603.01 | 603.03 |

### NOTES:

1. All Elevations and Offsets are in feet.
2. Offsets are measured with respect to the I-80 WB PGL. Negative offsets are left and positive are right of the PGL.

# FOR INFORMATION ONLY

WSP USA Inc.
30 N. LASALLE STREET
SUITE 4200
CHICAGO, IL 60602
TEL: (312) 782-8150
FAX: (312) 782-1684

| | | | |
|---|---|---|---|
| USER NAME = USCP702533 | DESIGNED - LAS | REVISED - | |
| | CHECKED - TB | REVISED - | |
| PLOT SCALE = 8:0 ':" / in. | DRAWN - GM | REVISED - | |
| PLOT DATE = 10/11/2024 | CHECKED - LAS | REVISED - | |

**STATE OF ILLINOIS**
**DEPARTMENT OF TRANSPORTATION**

**TOP OF SLAB ELEVATIONS - UNIT 1 WB**
**STRUCTURE NUMBER 099-8309 WB AND 099-8325 EB**

SHEET S-10 OF S-87 SHEETS

| F.A.I RTE. | SECTION | COUNTY | TOTAL SHEETS | SHEET NO. |
|---|---|---|---|---|
| I-80 | (99-3DEFP) HF 23 | WILL | 89 | 12 |
| | | CONTRACT NO. 62W52 | | |
| | ILLINOIS | FED. AID PROJECT | | |

MODEL: Default
FILE NAME: pw://transystems-pw.bentley.com:transyscorp-pw1-hosted/Documents/Projects_2018/CH401/401180022/03-WSP/CAD/62W52-SF-3/Sheets/0998309-E2W52-S010-DEW104.dgn

## GIRDER W6

| Location | Station | Offset | Theoretical Grade Elevations | Theoretical Grade Elevations Adjusted for Dead Load Deflection and Grinding |
|---|---|---|---|---|
| BK. W. ABUT. WB | 38+39.63 | -28.95 | 597.02 | 597.04 |
| ℄ EXP. JT. | 38+41.39 | -28.91 | 597.06 | 597.08 |
| ℄ BRG. W. ABUT. WB | 38+43.68 | -28.86 | 597.12 | 597.14 |
| 1A | 38+53.68 | -28.64 | 597.34 | 597.31 |
| 1B | 38+63.68 | -28.41 | 597.57 | 597.49 |
| 1C | 38+73.68 | -28.19 | 597.79 | 597.66 |
| 1D | 38+83.67 | -27.97 | 598.00 | 597.85 |
| 1E | 38+93.67 | -27.74 | 598.22 | 598.03 |
| 1F | 39+03.67 | -27.52 | 598.43 | 598.22 |
| 1G | 39+13.67 | -27.30 | 598.63 | 598.42 |
| 1H | 39+23.66 | -27.07 | 598.84 | 598.63 |
| 1I | 39+33.66 | -26.85 | 599.04 | 598.84 |
| 1J | 39+43.66 | -26.63 | 599.25 | 599.07 |
| 1K | 39+53.66 | -26.40 | 599.45 | 599.29 |
| 1L | 39+63.65 | -26.18 | 599.64 | 599.52 |
| 1M | 39+73.65 | -25.96 | 599.83 | 599.74 |
| 1N | 39+83.65 | -25.73 | 600.02 | 599.96 |
| 1O | 39+93.65 | -25.51 | 600.21 | 600.17 |
| 1P | 40+03.64 | -25.29 | 600.39 | 600.38 |
| 1Q | 40+13.64 | -25.06 | 600.56 | 600.57 |
| ℄ BRG. PIER 1 WB | 40+23.69 | -24.84 | 600.74 | 600.76 |
| 1R | 40+33.68 | -24.62 | 600.90 | 600.92 |
| 1S | 40+43.68 | -24.39 | 601.07 | 601.09 |
| 1T | 40+53.68 | -24.17 | 601.23 | 601.23 |
| 1U | 40+63.68 | -23.95 | 601.38 | 601.37 |
| 1V | 40+73.67 | -23.72 | 601.54 | 601.51 |
| 1W | 40+83.67 | -23.50 | 601.68 | 601.63 |
| 1X | 40+93.67 | -23.28 | 601.83 | 601.75 |
| 1Y | 41+03.67 | -23.05 | 601.97 | 601.88 |
| 1Z | 41+13.66 | -22.83 | 602.10 | 602.00 |
| 1AA | 41+23.66 | -22.61 | 602.24 | 602.12 |
| 1AB | 41+33.66 | -22.38 | 602.36 | 602.25 |
| 1AC | 41+43.66 | -22.16 | 602.49 | 602.38 |
| 1AD | 41+53.65 | -21.94 | 602.61 | 602.51 |
| 1AE | 41+63.65 | -21.71 | 602.73 | 602.64 |
| 1AF | 41+73.65 | -21.49 | 602.84 | 602.78 |
| 1AG | 41+83.65 | -21.27 | 602.95 | 602.92 |
| 1AH | 41+93.64 | -21.04 | 603.05 | 603.05 |
| 1AI | - | - | - | - |
| ℄ W. BRG. PIER 2 WB | 41+98.96 | -20.93 | 603.10 | 603.12 |
| ℄ PIER 2 WB | 42+01.21 | -20.87 | 603.13 | 603.15 |

## CROWN - WB

| Location | Station | Offset | Theoretical Grade Elevations | Theoretical Grade Elevations Adjusted for Dead Load Deflection and Grinding |
|---|---|---|---|---|
| BK. W. ABUT. WB | 38+37.48 | -24.00 | 596.95 | 596.97 |
| ℄ EXP. JT. | 38+39.79 | -24.00 | 597.01 | 597.03 |
| ℄ BRG. W. ABUT. WB | 38+41.57 | -24.00 | 597.05 | 597.07 |
| 1A | 38+51.57 | -24.00 | 597.29 | 597.26 |
| 1B | 38+61.57 | -24.00 | 597.52 | 597.44 |
| 1C | 38+71.57 | -24.00 | 597.75 | 597.63 |
| 1D | 38+81.57 | -24.00 | 597.97 | 597.82 |
| 1E | 38+91.57 | -24.00 | 598.20 | 598.01 |
| 1F | 39+01.57 | -24.00 | 598.41 | 598.21 |
| 1G | 39+11.57 | -24.00 | 598.63 | 598.41 |
| 1H | 39+21.57 | -24.00 | 598.84 | 598.63 |
| 1I | 39+31.57 | -24.00 | 599.04 | 598.84 |
| 1J | 39+41.57 | -24.00 | 599.24 | 599.06 |
| 1K | 39+51.57 | -24.00 | 599.44 | 599.29 |
| 1L | 39+61.57 | -24.00 | 599.64 | 599.51 |
| 1M | 39+71.57 | -24.00 | 599.82 | 599.73 |
| 1N | 39+81.57 | -24.00 | 600.01 | 599.95 |
| 1O | 39+91.57 | -24.00 | 600.19 | 600.16 |
| 1P | 40+01.57 | -24.00 | 600.37 | 600.36 |
| 1Q | 40+11.57 | -24.00 | 600.54 | 600.55 |
| ℄ BRG. PIER 1 WB | 40+23.32 | -24.00 | 600.74 | 600.76 |
| 1R | 40+33.32 | -24.00 | 600.91 | 600.93 |
| 1S | 40+43.32 | -24.00 | 601.07 | 601.09 |
| 1T | 40+53.32 | -24.00 | 601.22 | 601.23 |
| 1U | 40+63.32 | -24.00 | 601.38 | 601.37 |
| 1V | 40+73.32 | -24.00 | 601.53 | 601.50 |
| 1W | 40+83.32 | -24.00 | 601.67 | 601.62 |
| 1X | 40+93.32 | -24.00 | 601.81 | 601.74 |
| 1Y | 41+03.32 | -24.00 | 601.95 | 601.86 |
| 1Z | 41+13.32 | -24.00 | 602.08 | 601.98 |
| 1AA | 41+23.32 | -24.00 | 602.21 | 602.10 |
| 1AB | 41+33.32 | -24.00 | 602.34 | 602.22 |
| 1AC | 41+43.32 | -24.00 | 602.46 | 602.34 |
| 1AD | 41+53.32 | -24.00 | 602.57 | 602.47 |
| 1AE | 41+63.32 | -24.00 | 602.69 | 602.60 |
| 1AF | 41+73.32 | -24.00 | 602.80 | 602.74 |
| 1AG | 41+83.32 | -24.00 | 602.90 | 602.87 |
| 1AH | 41+93.32 | -24.00 | 603.00 | 603.01 |
| 1AI | - | - | - | - |
| ℄ W. BRG. PIER 2 WB | 41+98.96 | -24.00 | 603.06 | 603.08 |
| ℄ PIER 2 WB | 42+01.21 | -24.00 | 603.08 | 603.10 |

## GIRDER W7

| Location | Station | Offset | Theoretical Grade Elevations | Theoretical Grade Elevations Adjusted for Dead Load Deflection and Grinding |
|---|---|---|---|---|
| BK. W. ABUT. WB | 38+35.41 | -19.23 | 596.83 | 596.85 |
| ℄ EXP. JT. | 38+37.17 | -19.20 | 596.87 | 596.89 |
| ℄ BRG. W. ABUT. WB | 38+39.47 | -19.16 | 596.92 | 596.95 |
| 1A | 38+49.47 | -19.00 | 597.16 | 597.13 |
| 1B | 38+59.46 | -18.83 | 597.39 | 597.31 |
| 1C | 38+69.46 | -18.67 | 597.62 | 597.50 |
| 1D | 38+79.46 | -18.50 | 597.84 | 597.69 |
| 1E | 38+89.46 | -18.34 | 598.06 | 597.88 |
| 1F | 38+99.46 | -18.17 | 598.28 | 598.08 |
| 1G | 39+09.46 | -18.01 | 598.49 | 598.28 |
| 1H | 39+19.46 | -17.84 | 598.70 | 598.49 |
| 1I | 39+29.46 | -17.68 | 598.90 | 598.70 |
| 1J | 39+39.45 | -17.51 | 599.10 | 598.93 |
| 1K | 39+49.45 | -17.34 | 599.30 | 599.15 |
| 1L | 39+59.45 | -17.18 | 599.49 | 599.37 |
| 1M | 39+69.45 | -17.01 | 599.68 | 599.59 |
| 1N | 39+79.45 | -16.85 | 599.86 | 599.80 |
| 1O | 39+89.45 | -16.68 | 600.04 | 600.01 |
| 1P | 39+99.45 | -16.52 | 600.22 | 600.21 |
| 1Q | 40+09.44 | -16.35 | 600.39 | 600.40 |
| ℄ BRG. PIER 1 WB | 40+19.92 | -16.18 | 600.57 | 600.59 |
| 1R | 40+29.92 | -16.01 | 600.73 | 600.75 |
| 1S | 40+39.92 | -15.85 | 600.89 | 600.90 |
| 1T | 40+49.92 | -15.68 | 601.05 | 601.05 |
| 1U | 40+59.91 | -15.52 | 601.20 | 601.18 |
| 1V | 40+69.91 | -15.35 | 601.35 | 601.31 |
| 1W | 40+79.91 | -15.19 | 601.49 | 601.43 |
| 1X | 40+89.91 | -15.02 | 601.63 | 601.54 |
| 1Y | 40+99.91 | -14.85 | 601.77 | 601.66 |
| 1Z | 41+09.91 | -14.69 | 601.90 | 601.77 |
| 1AA | 41+19.91 | -14.52 | 602.03 | 601.89 |
| 1AB | 41+29.90 | -14.36 | 602.15 | 602.01 |
| 1AC | 41+39.90 | -14.19 | 602.27 | 602.13 |
| 1AD | 41+49.90 | -14.03 | 602.39 | 602.26 |
| 1AE | 41+59.90 | -13.86 | 602.50 | 602.39 |
| 1AF | 41+69.90 | -13.70 | 602.60 | 602.52 |
| 1AG | 41+79.90 | -13.53 | 602.71 | 602.66 |
| 1AH | 41+89.90 | -13.36 | 602.81 | 602.80 |
| 1AI | - | - | - | - |
| ℄ W. BRG. PIER 2 WB | 41+98.96 | -13.21 | 602.90 | 602.92 |
| ℄ PIER 2 WB | 42+01.21 | -13.18 | 602.92 | 602.94 |

### NOTES:

1. All Elevations and Offsets are in feet.
2. Offsets are measured with respect to the I-80 WB PGL. Negative offsets are left and positive are right of the PGL.

# FOR INFORMATION ONLY

WSP USA Inc.
30 N. LASALLE STREET
SUITE 4200
CHICAGO, IL 60602
TEL: (312) 782-8150
FAX: (312) 782-1684

| | | | |
|---|---|---|---|
| USER NAME = USCP702533 | DESIGNED - LAS | REVISED - | |
| | CHECKED - TB | REVISED - | |
| PLOT SCALE = 8:0 ':" / in. | DRAWN - GM | REVISED - | |
| PLOT DATE = 10/11/2024 | CHECKED - LAS | REVISED - | |

**STATE OF ILLINOIS**
**DEPARTMENT OF TRANSPORTATION**

**TOP OF SLAB ELEVATIONS - UNIT 1 WB**
**STRUCTURE NUMBER 099-8309 WB AND 099-8325 EB**

SHEET S-11 OF S-87 SHEETS

| F.A.I RTE. | SECTION | COUNTY | TOTAL SHEETS | SHEET NO. |
|---|---|---|---|---|
| I-80 | (99-3DEFP) HF 23 | WILL | 89 | 13 |
| | | CONTRACT NO. 62W52 | | |
| | ILLINOIS | FED. AID PROJECT | | |

MODEL: Default
FILE NAME: pw://transystems-pw.bentley.com:transyscorp-pw1-hosted/Documents/Projects_2018/CH401/401180022/03-WSP/CAD/62W52-SF-3/Sheets/0998309-62W52-S011-DEW105.dgn

## NORTH EDGE OF SOUTH LANE - WB

| Location | Station | Offset | Theoretical Grade Elevations | Theoretical Grade Elevations Adjusted for Dead Load Deflection and Grinding |
|---|---|---|---|---|
| BK. W. ABUT. WB | 38+32.26 | -12.00 | 596.64 | 596.66 |
| ℄ EXP. JT. | 38+34.58 | -12.00 | 596.70 | 596.72 |
| ℄ BRG. W. ABUT. WB | 38+36.35 | -12.00 | 596.74 | 596.76 |
| 1A | 38+46.35 | -12.00 | 596.98 | 596.95 |
| 1B | 38+56.35 | -12.00 | 597.22 | 597.14 |
| 1C | 38+66.35 | -12.00 | 597.45 | 597.32 |
| 1D | 38+76.35 | -12.00 | 597.68 | 597.52 |
| 1E | 38+86.35 | -12.00 | 597.90 | 597.71 |
| 1F | 38+96.35 | -12.00 | 598.12 | 597.91 |
| 1G | 39+06.35 | -12.00 | 598.34 | 598.12 |
| 1H | 39+16.35 | -12.00 | 598.55 | 598.33 |
| 1I | 39+26.35 | -12.00 | 598.76 | 598.55 |
| 1J | 39+36.35 | -12.00 | 598.96 | 598.78 |
| 1K | 39+46.35 | -12.00 | 599.16 | 599.00 |
| 1L | 39+56.35 | -12.00 | 599.35 | 599.23 |
| 1M | 39+66.35 | -12.00 | 599.55 | 599.45 |
| 1N | 39+76.35 | -12.00 | 599.73 | 599.67 |
| 1O | 39+86.35 | -12.00 | 599.92 | 599.89 |
| 1P | 39+96.35 | -12.00 | 600.10 | 600.09 |
| 1Q | 40+06.35 | -12.00 | 600.27 | 600.28 |
| ℄ BRG. PIER 1 WB | 40+18.10 | -12.00 | 600.47 | 600.50 |
| 1R | 40+28.10 | -12.00 | 600.64 | 600.66 |
| 1S | 40+38.10 | -12.00 | 600.80 | 600.81 |
| 1T | 40+48.10 | -12.00 | 600.96 | 600.95 |
| 1U | 40+58.10 | -12.00 | 601.12 | 601.09 |
| 1V | 40+68.10 | -12.00 | 601.27 | 601.21 |
| 1W | 40+78.10 | -12.00 | 601.42 | 601.33 |
| 1X | 40+88.10 | -12.00 | 601.56 | 601.45 |
| 1Y | 40+98.10 | -12.00 | 601.70 | 601.56 |
| 1Z | 41+08.10 | -12.00 | 601.83 | 601.68 |
| 1AA | 41+18.10 | -12.00 | 601.96 | 601.80 |
| 1AB | 41+28.10 | -12.00 | 602.09 | 601.92 |
| 1AC | 41+38.10 | -12.00 | 602.21 | 602.05 |
| 1AD | 41+48.10 | -12.00 | 602.33 | 602.17 |
| 1AE | 41+58.10 | -12.00 | 602.45 | 602.31 |
| 1AF | 41+68.10 | -12.00 | 602.56 | 602.45 |
| 1AG | 41+78.10 | -12.00 | 602.67 | 602.59 |
| 1AH | 41+88.10 | -12.00 | 602.77 | 602.73 |
| 1AI | - | - | - | - |
| ℄ W. BRG. PIER 2 WB | 41+98.96 | -12.00 | 602.88 | 602.90 |
| ℄ PIER 2 WB | 42+01.21 | -12.00 | 602.90 | 602.92 |

## GIRDER W8

| Location | Station | Offset | Theoretical Grade Elevations | Theoretical Grade Elevations Adjusted for Dead Load Deflection and Grinding |
|---|---|---|---|---|
| BK. W. ABUT. WB | 38+31.18 | -9.52 | 596.57 | 596.59 |
| ℄ EXP. JT. | 38+32.95 | -9.50 | 596.61 | 596.63 |
| ℄ BRG. W. ABUT. WB | 38+35.25 | -9.47 | 596.66 | 596.69 |
| 1A | 38+45.25 | -9.36 | 596.90 | 596.87 |
| 1B | 38+55.25 | -9.25 | 597.14 | 597.06 |
| 1C | 38+65.25 | -9.14 | 597.37 | 597.24 |
| 1D | 38+75.25 | -9.03 | 597.59 | 597.43 |
| 1E | 38+85.25 | -8.93 | 597.81 | 597.62 |
| 1F | 38+95.25 | -8.82 | 598.03 | 597.83 |
| 1G | 39+05.25 | -8.71 | 598.25 | 598.03 |
| 1H | 39+15.25 | -8.60 | 598.46 | 598.24 |
| 1I | 39+25.25 | -8.49 | 598.66 | 598.46 |
| 1J | 39+35.25 | -8.38 | 598.86 | 598.68 |
| 1K | 39+45.25 | -8.27 | 599.06 | 598.91 |
| 1L | 39+55.25 | -8.16 | 599.26 | 599.13 |
| 1M | 39+65.25 | -8.05 | 599.45 | 599.35 |
| 1N | 39+75.24 | -7.94 | 599.63 | 599.57 |
| 1O | 39+85.24 | -7.84 | 599.81 | 599.78 |
| 1P | 39+95.24 | -7.73 | 599.99 | 599.99 |
| 1Q | 40+05.24 | -7.62 | 600.17 | 600.17 |
| ℄ BRG. PIER 1 WB | 40+16.14 | -7.50 | 600.35 | 600.37 |
| 1R | 40+26.14 | -7.39 | 600.52 | 600.53 |
| 1S | 40+36.14 | -7.28 | 600.68 | 600.69 |
| 1T | 40+46.14 | -7.17 | 600.84 | 600.83 |
| 1U | 40+56.14 | -7.06 | 600.99 | 600.96 |
| 1V | 40+66.14 | -6.95 | 601.14 | 601.08 |
| 1W | 40+76.14 | -6.84 | 601.29 | 601.20 |
| 1X | 40+86.14 | -6.73 | 601.43 | 601.31 |
| 1Y | 40+96.14 | -6.63 | 601.56 | 601.43 |
| 1Z | 41+06.14 | -6.52 | 601.70 | 601.54 |
| 1AA | 41+16.14 | -6.41 | 601.83 | 601.66 |
| 1AB | 41+26.14 | -6.30 | 601.95 | 601.78 |
| 1AC | 41+36.14 | -6.19 | 602.07 | 601.91 |
| 1AD | 41+46.14 | -6.08 | 602.19 | 602.03 |
| 1AE | 41+56.14 | -5.97 | 602.31 | 602.17 |
| 1AF | 41+66.14 | -5.86 | 602.42 | 602.31 |
| 1AG | 41+76.14 | -5.75 | 602.52 | 602.45 |
| 1AH | 41+86.13 | -5.64 | 602.62 | 602.59 |
| 1AI | - | - | - | - |
| ℄ W. BRG. PIER 2 WB | 41+98.96 | -5.50 | 602.75 | 602.77 |
| ℄ PIER 2 WB | 42+01.21 | -5.48 | 602.77 | 602.79 |

## PGL I-80 WB

| Location | Station | Offset | Theoretical Grade Elevations | Theoretical Grade Elevations Adjusted for Dead Load Deflection and Grinding |
|---|---|---|---|---|
| BK. W. ABUT. WB | 38+27.04 | 0.00 | 596.28 | 596.30 |
| ℄ EXP. JT. | 38+29.36 | 0.00 | 596.33 | 596.35 |
| ℄ BRG. W. ABUT. WB | 38+31.13 | 0.00 | 596.38 | 596.40 |
| 1A | 38+41.13 | 0.00 | 596.62 | 596.59 |
| 1B | 38+51.13 | 0.00 | 596.85 | 596.77 |
| 1C | 38+61.13 | 0.00 | 597.09 | 596.96 |
| 1D | 38+71.13 | 0.00 | 597.32 | 597.15 |
| 1E | 38+81.13 | 0.00 | 597.54 | 597.35 |
| 1F | 38+91.13 | 0.00 | 597.77 | 597.56 |
| 1G | 39+01.13 | 0.00 | 597.98 | 597.76 |
| 1H | 39+11.13 | 0.00 | 598.20 | 597.98 |
| 1I | 39+21.13 | 0.00 | 598.41 | 598.20 |
| 1J | 39+31.13 | 0.00 | 598.61 | 598.43 |
| 1K | 39+41.13 | 0.00 | 598.82 | 598.66 |
| 1L | 39+51.13 | 0.00 | 599.01 | 598.89 |
| 1M | 39+61.13 | 0.00 | 599.21 | 599.12 |
| 1N | 39+71.13 | 0.00 | 599.40 | 599.34 |
| 1O | 39+81.13 | 0.00 | 599.58 | 599.55 |
| 1P | 39+91.13 | 0.00 | 599.76 | 599.76 |
| 1Q | 40+01.13 | 0.00 | 599.94 | 599.95 |
| ℄ BRG. PIER 1 WB | 40+12.88 | 0.00 | 600.15 | 600.17 |
| 1R | 40+22.88 | 0.00 | 600.31 | 600.33 |
| 1S | 40+32.88 | 0.00 | 600.48 | 600.48 |
| 1T | 40+42.88 | 0.00 | 600.64 | 600.62 |
| 1U | 40+52.88 | 0.00 | 600.80 | 600.76 |
| 1V | 40+62.88 | 0.00 | 600.95 | 600.88 |
| 1W | 40+72.88 | 0.00 | 601.10 | 601.00 |
| 1X | 40+82.88 | 0.00 | 601.25 | 601.11 |
| 1Y | 40+92.88 | 0.00 | 601.39 | 601.22 |
| 1Z | 41+02.88 | 0.00 | 601.52 | 601.34 |
| 1AA | 41+12.88 | 0.00 | 601.66 | 601.46 |
| 1AB | 41+22.88 | 0.00 | 601.79 | 601.58 |
| 1AC | 41+32.88 | 0.00 | 601.91 | 601.71 |
| 1AD | 41+42.88 | 0.00 | 602.03 | 601.84 |
| 1AE | 41+52.88 | 0.00 | 602.15 | 601.98 |
| 1AF | 41+62.88 | 0.00 | 602.26 | 602.12 |
| 1AG | 41+72.88 | 0.00 | 602.37 | 602.27 |
| 1AH | 41+82.88 | 0.00 | 602.48 | 602.42 |
| 1AI | 41+92.88 | 0.00 | 602.58 | 602.57 |
| ℄ W. BRG. PIER 2 WB | 41+98.96 | 0.00 | 602.64 | 602.66 |
| ℄ PIER 2 WB | 42+01.21 | 0.00 | 602.66 | 602.68 |

### NOTES:

1. All Elevations and Offsets are in feet.
2. Offsets are measured with respect to the I-80 WB PGL. Negative offsets are left and positive are right of the PGL.

# FOR INFORMATION ONLY

WSP USA Inc.
30 N. LASALLE STREET
SUITE 4200
CHICAGO, IL 60602
TEL: (312) 782-8150
FAX: (312) 782-1684

| | | | |
|---|---|---|---|
| USER NAME = USCP702533 | DESIGNED - LAS | REVISED - | |
| | CHECKED - TB | REVISED - | |
| PLOT SCALE = 8:0 ':" / in. | DRAWN - GM | REVISED - | |
| PLOT DATE = 10/11/2024 | CHECKED - LAS | REVISED - | |

**STATE OF ILLINOIS**
**DEPARTMENT OF TRANSPORTATION**

**TOP OF SLAB ELEVATIONS - UNIT 1 WB**
**STRUCTURE NUMBER 099-8309 WB AND 099-8325 EB**

SHEET S-12 OF S-87 SHEETS

| F.A.I RTE. | SECTION | COUNTY | TOTAL SHEETS | SHEET NO. |
|---|---|---|---|---|
| I-80 | (99-3DEFP) HF 23 | WILL | 89 | 14 |
| | | CONTRACT NO. 62W52 | | |
| | ILLINOIS | FED. AID PROJECT | | |

MODEL: Default
FILE NAME: pw://transystems-pw.bentley.com:transyscorp-pw1-hosted/Documents/Projects_2018/CH401/401180022/03-WSP/CAD/62W52-SF-3/Sheets/0998309-62W52-S012-DEW106.dgn

## GIRDER W9

| Location | Station | Offset | Theoretical Grade Elevations | Theoretical Grade Elevations Adjusted for Dead Load Deflection and Grinding |
|---|---|---|---|---|
| BK. W. ABUT. WB | 38+26.96 | 0.20 | 596.27 | 596.29 |
| ℄ EXP. JT. | 38+28.73 | 0.21 | 596.31 | 596.33 |
| ℄ BRG. W. ABUT. WB | 38+31.04 | 0.22 | 596.37 | 596.39 |
| 1A | 38+41.04 | 0.28 | 596.61 | 596.58 |
| 1B | 38+51.04 | 0.33 | 596.85 | 596.76 |
| 1C | 38+61.04 | 0.38 | 597.08 | 596.95 |
| 1D | 38+71.04 | 0.44 | 597.31 | 597.14 |
| 1E | 38+81.04 | 0.49 | 597.53 | 597.34 |
| 1F | 38+91.04 | 0.55 | 597.75 | 597.54 |
| 1G | 39+01.04 | 0.60 | 597.97 | 597.75 |
| 1H | 39+11.04 | 0.65 | 598.18 | 597.97 |
| 1I | 39+21.04 | 0.71 | 598.39 | 598.19 |
| 1J | 39+31.04 | 0.76 | 598.60 | 598.41 |
| 1K | 39+41.04 | 0.82 | 598.80 | 598.64 |
| 1L | 39+51.04 | 0.87 | 598.99 | 598.87 |
| 1M | 39+61.04 | 0.92 | 599.19 | 599.10 |
| 1N | 39+71.04 | 0.98 | 599.38 | 599.32 |
| 1O | 39+81.04 | 1.03 | 599.56 | 599.53 |
| 1P | 39+91.04 | 1.09 | 599.74 | 599.74 |
| 1Q | 40+01.04 | 1.14 | 599.92 | 599.93 |
| ℄ BRG. PIER 1 WB | 40+12.36 | 1.20 | 600.11 | 600.13 |
| 1R | 40+22.36 | 1.25 | 600.28 | 600.29 |
| 1S | 40+32.36 | 1.31 | 600.45 | 600.45 |
| 1T | 40+42.36 | 1.36 | 600.61 | 600.59 |
| 1U | 40+52.36 | 1.42 | 600.76 | 600.72 |
| 1V | 40+62.36 | 1.47 | 600.91 | 600.84 |
| 1W | 40+72.36 | 1.52 | 601.06 | 600.96 |
| 1X | 40+82.36 | 1.58 | 601.21 | 601.07 |
| 1Y | 40+92.36 | 1.63 | 601.35 | 601.18 |
| 1Z | 41+02.36 | 1.69 | 601.48 | 601.30 |
| 1AA | 41+12.36 | 1.74 | 601.62 | 601.42 |
| 1AB | 41+22.36 | 1.79 | 601.74 | 601.53 |
| 1AC | 41+32.36 | 1.85 | 601.87 | 601.66 |
| 1AD | 41+42.36 | 1.90 | 601.99 | 601.79 |
| 1AE | 41+52.36 | 1.95 | 602.10 | 601.93 |
| 1AF | 41+62.36 | 2.01 | 602.22 | 602.07 |
| 1AG | 41+72.36 | 2.06 | 602.32 | 602.22 |
| 1AH | 41+82.36 | 2.12 | 602.43 | 602.37 |
| 1AI | 41+92.36 | 2.17 | 602.53 | 602.52 |
| ℄ W. BRG. PIER 2 WB | 41+98.96 | 2.21 | 602.59 | 602.61 |
| ℄ PIER 2 WB | 42+01.21 | 2.22 | 602.61 | 602.64 |

## GIRDER W10

| Location | Station | Offset | Theoretical Grade Elevations | Theoretical Grade Elevations Adjusted for Dead Load Deflection and Grinding |
|---|---|---|---|---|
| BK. W. ABUT. WB | 38+22.73 | 9.92 | 595.97 | 595.99 |
| ℄ EXP. JT. | 38+25.05 | 9.92 | 596.03 | 596.05 |
| ℄ BRG. W. ABUT. WB | 38+26.82 | 9.92 | 596.07 | 596.09 |
| 1A | 38+36.82 | 9.92 | 596.32 | 596.29 |
| 1B | 38+46.82 | 9.92 | 596.55 | 596.48 |
| 1C | 38+56.82 | 9.92 | 596.79 | 596.67 |
| 1D | 38+66.82 | 9.92 | 597.02 | 596.87 |
| 1E | 38+76.82 | 9.92 | 597.25 | 597.07 |
| 1F | 38+86.82 | 9.92 | 597.47 | 597.27 |
| 1G | 38+96.82 | 9.92 | 597.69 | 597.48 |
| 1H | 39+06.82 | 9.92 | 597.91 | 597.71 |
| 1I | 39+16.82 | 9.92 | 598.12 | 597.93 |
| 1J | 39+26.82 | 9.92 | 598.33 | 598.16 |
| 1K | 39+36.82 | 9.92 | 598.53 | 598.38 |
| 1L | 39+46.82 | 9.92 | 598.73 | 598.62 |
| 1M | 39+56.82 | 9.92 | 598.93 | 598.84 |
| 1N | 39+66.82 | 9.92 | 599.12 | 599.07 |
| 1O | 39+76.82 | 9.92 | 599.30 | 599.28 |
| 1P | 39+86.82 | 9.92 | 599.49 | 599.49 |
| 1Q | 39+96.82 | 9.92 | 599.67 | 599.68 |
| ℄ BRG. PIER 1 WB | 40+08.57 | 9.92 | 599.87 | 599.89 |
| 1R | 40+18.57 | 9.92 | 600.04 | 600.05 |
| 1S | 40+28.57 | 9.92 | 600.21 | 600.21 |
| 1T | 40+38.57 | 9.92 | 600.37 | 600.35 |
| 1U | 40+48.57 | 9.92 | 600.53 | 600.48 |
| 1V | 40+58.57 | 9.92 | 600.69 | 600.60 |
| 1W | 40+68.57 | 9.92 | 600.84 | 600.72 |
| 1X | 40+78.57 | 9.92 | 600.99 | 600.83 |
| 1Y | 40+88.57 | 9.92 | 601.13 | 600.94 |
| 1Z | 40+98.57 | 9.92 | 601.27 | 601.05 |
| 1AA | 41+08.57 | 9.92 | 601.40 | 601.17 |
| 1AB | 41+18.57 | 9.92 | 601.53 | 601.29 |
| 1AC | 41+28.57 | 9.92 | 601.66 | 601.42 |
| 1AD | 41+38.57 | 9.92 | 601.78 | 601.55 |
| 1AE | 41+48.57 | 9.92 | 601.90 | 601.69 |
| 1AF | 41+58.57 | 9.92 | 602.02 | 601.84 |
| 1AG | 41+68.57 | 9.92 | 602.13 | 601.99 |
| 1AH | 41+78.57 | 9.92 | 602.23 | 602.14 |
| 1AI | 41+88.57 | 9.92 | 602.34 | 602.30 |
| ℄ W. BRG. PIER 2 WB | 41+98.96 | 9.92 | 602.44 | 602.46 |
| ℄ PIER 2 WB | 42+01.21 | 9.92 | 602.46 | 602.48 |

## INSIDE FACE OF SOUTH PARAPET - WB

| Location | Station | Offset | Theoretical Grade Elevations | Theoretical Grade Elevations Adjusted for Dead Load Deflection and Grinding |
|---|---|---|---|---|
| BK. W. ABUT. WB | 38+21.82 | 12.00 | 595.91 | 595.93 |
| ℄ EXP. JT. | 38+24.14 | 12.00 | 595.96 | 595.98 |
| ℄ BRG. W. ABUT. WB | 38+25.91 | 12.00 | 596.01 | 596.03 |
| 1A | 38+35.91 | 12.00 | 596.25 | 596.22 |
| 1B | 38+45.91 | 12.00 | 596.49 | 596.41 |
| 1C | 38+55.91 | 12.00 | 596.73 | 596.61 |
| 1D | 38+65.91 | 12.00 | 596.96 | 596.80 |
| 1E | 38+75.91 | 12.00 | 597.19 | 597.00 |
| 1F | 38+85.91 | 12.00 | 597.41 | 597.21 |
| 1G | 38+95.91 | 12.00 | 597.63 | 597.42 |
| 1H | 39+05.91 | 12.00 | 597.85 | 597.64 |
| 1I | 39+15.91 | 12.00 | 598.06 | 597.87 |
| 1J | 39+25.91 | 12.00 | 598.27 | 598.10 |
| 1K | 39+35.91 | 12.00 | 598.47 | 598.32 |
| 1L | 39+45.91 | 12.00 | 598.67 | 598.56 |
| 1M | 39+55.91 | 12.00 | 598.87 | 598.79 |
| 1N | 39+65.91 | 12.00 | 599.06 | 599.01 |
| 1O | 39+75.91 | 12.00 | 599.25 | 599.22 |
| 1P | 39+85.91 | 12.00 | 599.43 | 599.43 |
| 1Q | 39+95.91 | 12.00 | 599.61 | 599.62 |
| ℄ BRG. PIER 1 WB | 40+07.66 | 12.00 | 599.82 | 599.84 |
| 1R | 40+17.66 | 12.00 | 599.99 | 600.00 |
| 1S | 40+27.66 | 12.00 | 600.15 | 600.15 |
| 1T | 40+37.66 | 12.00 | 600.32 | 600.29 |
| 1U | 40+47.66 | 12.00 | 600.48 | 600.42 |
| 1V | 40+57.66 | 12.00 | 600.63 | 600.54 |
| 1W | 40+67.66 | 12.00 | 600.78 | 600.66 |
| 1X | 40+77.66 | 12.00 | 600.93 | 600.77 |
| 1Y | 40+87.66 | 12.00 | 601.07 | 600.88 |
| 1Z | 40+97.66 | 12.00 | 601.21 | 601.00 |
| 1AA | 41+07.66 | 12.00 | 601.35 | 601.12 |
| 1AB | 41+17.66 | 12.00 | 601.48 | 601.24 |
| 1AC | 41+27.66 | 12.00 | 601.61 | 601.37 |
| 1AD | 41+37.66 | 12.00 | 601.73 | 601.50 |
| 1AE | 41+47.66 | 12.00 | 601.85 | 601.64 |
| 1AF | 41+57.66 | 12.00 | 601.96 | 601.79 |
| 1AG | 41+67.66 | 12.00 | 602.08 | 601.94 |
| 1AH | 41+77.66 | 12.00 | 602.18 | 602.09 |
| 1AI | 41+87.66 | 12.00 | 602.29 | 602.25 |
| ℄ W. BRG. PIER 2 WB | 41+98.96 | 12.00 | 602.40 | 602.42 |
| ℄ PIER 2 WB | 42+01.21 | 12.00 | 602.42 | 602.44 |

### NOTES:

1. All Elevations and Offsets are in feet.
2. Offsets are measured with respect to the I-80 WB PGL. Negative offsets are left and positive are right of the PGL.

# FOR INFORMATION ONLY

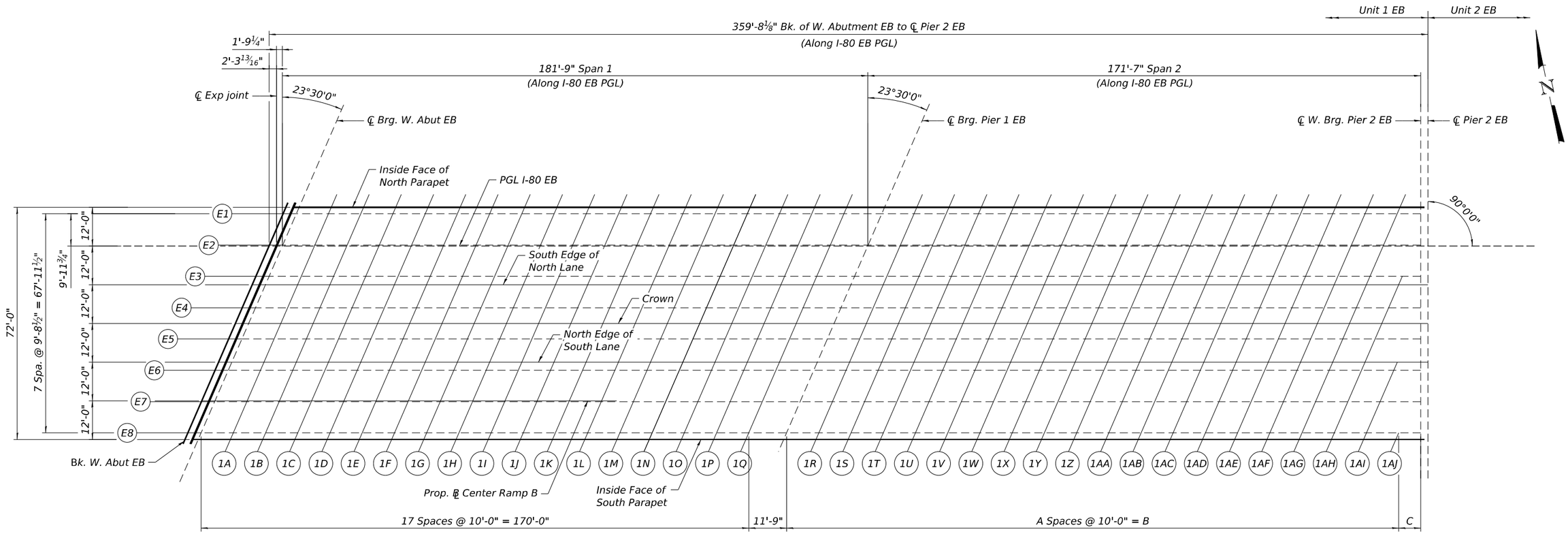


## PLAN - UNIT 1 EB

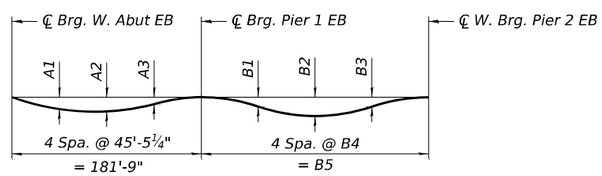


## DEAD LOAD DEFLECTION DIAGRAM

(Includes weight of concrete only.)

Note:
The above deflections are not to be used in the field if the engineer is working from the grade elevations adjusted for dead load deflections and grinding as shown on sheets S-15 to S-19.

| Girder | DEAD LOAD DEFLECTIONS | | | | | | | |
|---|---|---|---|---|---|---|---|---|
| | Span 1 | | | Span 2 | | | | |
| | A1 | A2 | A3 | B1 | B2 | B3 | B4 | B5 |
| E1 | 2⅝" | 3⅛" | 1⅜" | ⅜" | 1⅜" | 1¼" | 41'-9¾" (-) | 167'-2 5/16" |
| E2 | 2⅝" | 3" | 1⅜" | ½" | 1⅝" | 1½" | 42'-10⅜"(+) | 171'-5 9/16" |
| E3 | 2½" | 2⅞" | 1¼" | ⅝" | 1⅞" | 1¾" | 43'-11 1/16" | 175'-8¼" |
| E4 | 2⅜" | 2⅝" | 1" | ⅞" | 2¼" | 2" | 44'-11¾"(-) | 179'-10⅞" |
| E5 | 2¼" | 2½" | 1" | 1" | 2⅝" | 2¼" | 46'-0⅜" (+) | 184'-1 9/16" |
| E6 | 2¼" | 2½" | ⅞" | 1¼" | 3" | 2⅜" | 47'-1" (+) | 188'-4 3/16" |
| E7 | 2¼" | 2⅜" | ⅞" | 1½" | 3⅜" | 3" | 48'-1¾"(-) | 192'-6⅞" |
| E8 | 2⅛" | 2¼" | ¾" | 1¾" | 3⅞" | 3¼" | 49'-2⅜" | 196'-9½" |

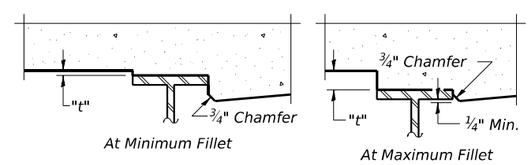


To determine "t": After all structural steel has been erected, elevations of the top flanges of the beams shall be taken at intervals shown on sheets S-15 to S-19. These elevations subtracted from the "Theoretical Grade Elevations Adjusted for Dead Load Deflection and Grinding" shown on sheets S-15 to S-19, minus the initial slab thickness prior to grinding, equals the fillet heights "t" above top flange of beams.

The slab is to be ground after curing to achieve smoothness, but the slab is not to be ground to elevations below the "Theoretical Grade Elevations" shown below. For grinding the deck, see Special Provisions.

## FILLET HEIGHTS

## TOP OF SLAB DIMENSIONS TABLE - UNIT 1 EB

| Girder | A | B | C |
|---|---|---|---|
| E1 | 16 | 160'-0" | 7'-2 15/16" |
| E2 | 16 | 160'-0" | 11'-5 9/16" |
| E3 | 17 | 170'-0" | 5'-8¼" |
| E4 | 17 | 170'-0" | 9'-10⅞" |
| E5 | 17 | 170'-0" | 14'-1 9/16" |
| E6 | 18 | 180'-0" | 8'-4 3/16" |
| E7 | 18 | 180'-0" | 12'-6⅞" |
| E8 | 19 | 190'-0" | 6'-9½" |

## NOTES:

1. The dead load deflections shown in the diagram and used for fillet height determination are based on the Deck Pouring Sequence shown on sheet S-48.
2. If the Contractor elects to use a different pour placement/hardening schedule, then the deflections and fillet heights shall be re-calculated.
3. The cost of re-calculating deflections and adjusting fillet heights shall be included in the cost of Concrete Superstructure.
4. Up to 1/4 inch to be ground off the bridge deck and the bridge approach slabs. The Profile Grade shows the final grade after grinding.

# FOR INFORMATION ONLY

MODEL: Default
FILE NAME: pw://transystems-pw.bentley.com:transyscorp-pw1-hosted/Documents/Projects_2018/CH401/401180022/03-WSP/CAD/62W52-SF-3/Sheets/0998309-62W52-S014-DEE101.dgn


WSP USA Inc.
30 N. LASALLE STREET
SUITE 4200
CHICAGO, IL 60602
TEL: (312) 782-8150
FAX: (312) 782-1684


| | | | |
|---|---|---|---|
| USER NAME = USCP702533 | DESIGNED - LAS | REVISED - | |
| | CHECKED - TB | REVISED - | |
| PLOT SCALE = 32:0 ':" / in. | DRAWN - GM | REVISED - | |
| PLOT DATE = 10/11/2024 | CHECKED - LAS | REVISED - | |

**STATE OF ILLINOIS**
**DEPARTMENT OF TRANSPORTATION**

**TOP OF SLAB ELEVATION PLAN - UNIT 1 EB**
**STRUCTURE NUMBER 099-8309 WB AND 099-8325 EB**

SHEET S-14 OF S-87 SHEETS

| F.A.I RTE. | SECTION | COUNTY | TOTAL SHEETS | SHEET NO. |
|---|---|---|---|---|
| I-80 | (99-3DEFP) HF 23 | WILL | 89 | 16 |
| | | CONTRACT NO. 62W52 | | |
| | ILLINOIS | FED. AID PROJECT | | |

## INSIDE FACE OF NORTH PARAPET - EB

| Location | Station | Offset | Theoretical Grade Elevations | Theoretical Grade Elevations Adjusted for Dead Load Deflection and Grinding |
|---|---|---|---|---|
| BK. W. ABUT. EB | 38+14.00 | -12.00 | 595.71 | 595.73 |
| ℄ EXP. JT. | 38+16.32 | -12.00 | 595.77 | 595.79 |
| ℄ BRG. W. ABUT. EB | 38+18.09 | -12.00 | 595.81 | 595.83 |
| 1A | 38+28.09 | -12.00 | 596.06 | 596.14 |
| 1B | 38+38.09 | -12.00 | 596.30 | 596.44 |
| 1C | 38+48.09 | -12.00 | 596.54 | 596.72 |
| 1D | 38+58.09 | -12.00 | 596.78 | 597.00 |
| 1E | 38+68.09 | -12.00 | 597.01 | 597.26 |
| 1F | 38+78.09 | -12.00 | 597.24 | 597.51 |
| 1G | 38+88.09 | -12.00 | 597.46 | 597.75 |
| 1H | 38+98.09 | -12.00 | 597.68 | 597.96 |
| 1I | 39+08.09 | -12.00 | 597.89 | 598.17 |
| 1J | 39+18.09 | -12.00 | 598.10 | 598.36 |
| 1K | 39+28.09 | -12.00 | 598.31 | 598.54 |
| 1L | 39+38.09 | -12.00 | 598.51 | 598.71 |
| 1M | 39+48.09 | -12.00 | 598.71 | 598.87 |
| 1N | 39+58.09 | -12.00 | 598.91 | 599.03 |
| 1O | 39+68.09 | -12.00 | 599.10 | 599.19 |
| 1P | 39+78.09 | -12.00 | 599.29 | 599.35 |
| 1Q | 39+88.09 | -12.00 | 599.47 | 599.51 |
| ℄ BRG. PIER 1 EB | 39+99.84 | -12.00 | 599.68 | 599.70 |
| 1R | 40+09.84 | -12.00 | 599.85 | 599.87 |
| 1S | 40+19.84 | -12.00 | 600.02 | 600.05 |
| 1T | 40+29.84 | -12.00 | 600.19 | 600.22 |
| 1U | 40+39.84 | -12.00 | 600.35 | 600.40 |
| 1V | 40+49.84 | -12.00 | 600.51 | 600.58 |
| 1W | 40+59.84 | -12.00 | 600.67 | 600.75 |
| 1X | 40+69.84 | -12.00 | 600.82 | 600.93 |
| 1Y | 40+79.84 | -12.00 | 600.96 | 601.09 |
| 1Z | 40+89.84 | -12.00 | 601.10 | 601.24 |
| 1AA | 40+99.84 | -12.00 | 601.24 | 601.39 |
| 1AB | 41+09.84 | -12.00 | 601.38 | 601.52 |
| 1AC | 41+19.84 | -12.00 | 601.51 | 601.64 |
| 1AD | 41+29.84 | -12.00 | 601.63 | 601.76 |
| 1AE | 41+39.84 | -12.00 | 601.76 | 601.86 |
| 1AF | 41+49.84 | -12.00 | 601.87 | 601.95 |
| 1AG | 41+59.84 | -12.00 | 601.99 | 602.03 |
| 1AH | - | - | - | - |
| 1AI | - | - | - | - |
| 1AJ | - | - | - | - |
| ℄ W. BRG. PIER 2 EB | 41+66.20 | -12.00 | 602.06 | 602.08 |
| ℄ PIER 2 EB | 41+68.45 | -12.00 | 602.08 | 602.10 |

## GIRDER E1

| Location | Station | Offset | Theoretical Grade Elevations | Theoretical Grade Elevations Adjusted for Dead Load Deflection and Grinding |
|---|---|---|---|---|
| BK. W. ABUT. EB | 38+13.12 | -9.98 | 595.73 | 595.75 |
| ℄ EXP. JT. | 38+15.44 | -9.98 | 595.79 | 595.81 |
| ℄ BRG. W. ABUT. EB | 38+17.21 | -9.98 | 595.83 | 595.85 |
| 1A | 38+27.21 | -9.98 | 596.08 | 596.16 |
| 1B | 38+37.21 | -9.98 | 596.32 | 596.46 |
| 1C | 38+47.21 | -9.98 | 596.56 | 596.74 |
| 1D | 38+57.21 | -9.98 | 596.80 | 597.02 |
| 1E | 38+67.21 | -9.98 | 597.03 | 597.28 |
| 1F | 38+77.21 | -9.98 | 597.26 | 597.53 |
| 1G | 38+87.21 | -9.98 | 597.48 | 597.77 |
| 1H | 38+97.21 | -9.98 | 597.70 | 597.98 |
| 1I | 39+07.21 | -9.98 | 597.91 | 598.19 |
| 1J | 39+17.21 | -9.98 | 598.13 | 598.38 |
| 1K | 39+27.21 | -9.98 | 598.33 | 598.56 |
| 1L | 39+37.21 | -9.98 | 598.54 | 598.73 |
| 1M | 39+47.21 | -9.98 | 598.74 | 598.89 |
| 1N | 39+57.21 | -9.98 | 598.93 | 599.05 |
| 1O | 39+67.21 | -9.98 | 599.12 | 599.21 |
| 1P | 39+77.21 | -9.98 | 599.31 | 599.37 |
| 1Q | 39+87.21 | -9.98 | 599.49 | 599.53 |
| ℄ BRG. PIER 1 EB | 39+98.96 | -9.98 | 599.70 | 599.72 |
| 1R | 40+08.96 | -9.98 | 599.88 | 599.90 |
| 1S | 40+18.96 | -9.98 | 600.05 | 600.07 |
| 1T | 40+28.96 | -9.98 | 600.22 | 600.25 |
| 1U | 40+38.96 | -9.98 | 600.38 | 600.43 |
| 1V | 40+48.96 | -9.98 | 600.54 | 600.61 |
| 1W | 40+58.96 | -9.98 | 600.69 | 600.78 |
| 1X | 40+68.96 | -9.98 | 600.84 | 600.95 |
| 1Y | 40+78.96 | -9.98 | 600.99 | 601.12 |
| 1Z | 40+88.96 | -9.98 | 601.13 | 601.27 |
| 1AA | 40+98.96 | -9.98 | 601.27 | 601.42 |
| 1AB | 41+08.96 | -9.98 | 601.41 | 601.55 |
| 1AC | 41+18.96 | -9.98 | 601.54 | 601.67 |
| 1AD | 41+28.96 | -9.98 | 601.66 | 601.79 |
| 1AE | 41+38.96 | -9.98 | 601.79 | 601.89 |
| 1AF | 41+48.96 | -9.98 | 601.90 | 601.98 |
| 1AG | 41+58.96 | -9.98 | 602.02 | 602.06 |
| 1AH | - | - | - | - |
| 1AI | - | - | - | - |
| 1AJ | - | - | - | - |
| ℄ W. BRG. PIER 2 EB | 41+66.20 | -9.98 | 602.10 | 602.12 |
| ℄ PIER 2 EB | 41+68.45 | -9.98 | 602.12 | 602.14 |

## GIRDER E2

| Location | Station | Offset | Theoretical Grade Elevations | Theoretical Grade Elevations Adjusted for Dead Load Deflection and Grinding |
|---|---|---|---|---|
| BK. W. ABUT. EB | 38+08.90 | -0.27 | 595.82 | 595.84 |
| ℄ EXP. JT. | 38+11.22 | -0.27 | 595.88 | 595.90 |
| ℄ BRG. W. ABUT. EB | 38+12.99 | -0.27 | 595.92 | 595.94 |
| 1A | 38+22.99 | -0.27 | 596.17 | 596.25 |
| 1B | 38+32.99 | -0.27 | 596.42 | 596.55 |
| 1C | 38+42.99 | -0.27 | 596.66 | 596.84 |
| 1D | 38+52.99 | -0.27 | 596.89 | 597.12 |
| 1E | 38+62.99 | -0.27 | 597.13 | 597.38 |
| 1F | 38+72.99 | -0.27 | 597.36 | 597.63 |
| 1G | 38+82.99 | -0.27 | 597.58 | 597.87 |
| 1H | 38+92.99 | -0.27 | 597.80 | 598.09 |
| 1I | 39+02.99 | -0.27 | 598.02 | 598.29 |
| 1J | 39+12.99 | -0.27 | 598.23 | 598.48 |
| 1K | 39+22.99 | -0.27 | 598.44 | 598.67 |
| 1L | 39+32.99 | -0.27 | 598.65 | 598.84 |
| 1M | 39+42.99 | -0.27 | 598.85 | 599.00 |
| 1N | 39+52.99 | -0.27 | 599.04 | 599.16 |
| 1O | 39+62.99 | -0.27 | 599.24 | 599.32 |
| 1P | 39+72.99 | -0.27 | 599.43 | 599.48 |
| 1Q | 39+82.99 | -0.27 | 599.61 | 599.65 |
| ℄ BRG. PIER 1 EB | 39+94.74 | -0.27 | 599.82 | 599.84 |
| 1R | 40+04.74 | -0.27 | 600.00 | 600.02 |
| 1S | 40+14.74 | -0.27 | 600.17 | 600.20 |
| 1T | 40+24.74 | -0.27 | 600.34 | 600.38 |
| 1U | 40+34.74 | -0.27 | 600.50 | 600.56 |
| 1V | 40+44.74 | -0.27 | 600.67 | 600.75 |
| 1W | 40+54.74 | -0.27 | 600.82 | 600.93 |
| 1X | 40+64.74 | -0.27 | 600.97 | 601.10 |
| 1Y | 40+74.74 | -0.27 | 601.12 | 601.27 |
| 1Z | 40+84.74 | -0.27 | 601.27 | 601.43 |
| 1AA | 40+94.74 | -0.27 | 601.41 | 601.58 |
| 1AB | 41+04.74 | -0.27 | 601.54 | 601.71 |
| 1AC | 41+14.74 | -0.27 | 601.68 | 601.84 |
| 1AD | 41+24.74 | -0.27 | 601.80 | 601.95 |
| 1AE | 41+34.74 | -0.27 | 601.93 | 602.05 |
| 1AF | 41+44.74 | -0.27 | 602.05 | 602.14 |
| 1AG | 41+54.74 | -0.27 | 602.17 | 602.23 |
| 1AH | - | - | - | - |
| 1AI | - | - | - | - |
| 1AJ | - | - | - | - |
| ℄ W. BRG. PIER 2 EB | 41+66.20 | -0.27 | 602.29 | 602.31 |
| ℄ PIER 2 EB | 41+68.45 | -0.27 | 602.32 | 602.34 |

### NOTES:

1. All Elevations and Offsets are in feet.
2. Offsets are measured with respect to the I-80 EB PGL. Negative offsets are left and positive are right of the PGL.

**FOR INFORMATION ONLY**

MODEL: Default
FILE NAME: pw://transystems-pw.bentley.com:transyscorp-pw1-hosted/Documents/Projects_2018/CH401/401180022/03-WSP/CAD/62W52-SF-3/Sheets/0998309-62W52-S015-DEE102.dgn

WSP USA Inc.
30 N. LASALLE STREET
SUITE 4200
CHICAGO, IL 60602
TEL: (312) 782-8150
FAX: (312) 782-1684

| | | | |
|---|---|---|---|
| USER NAME = USCP702533 | DESIGNED - LAS | REVISED - | |
| | CHECKED - TB | REVISED - | |
| PLOT SCALE = 8:0 ':" / in. | DRAWN - GM | REVISED - | |
| PLOT DATE = 10/11/2024 | CHECKED - LAS | REVISED - | |

**STATE OF ILLINOIS**
**DEPARTMENT OF TRANSPORTATION**

**TOP OF SLAB ELEVATIONS - UNIT 1 EB**
**STRUCTURE NUMBER 099-8309 WB AND 099-8325 EB**

SHEET S-15 OF S-87 SHEETS

| F.A.I RTE. | SECTION | COUNTY | TOTAL SHEETS | SHEET NO. |
|---|---|---|---|---|
| I-80 | (99-3DEFP) HF 23 | WILL | 89 | 17 |
| | | CONTRACT NO. 62W52 | | |
| | ILLINOIS | FED. AID PROJECT | | |

## PGL I-80 EB

| Location | Station | Offset | Theoretical Grade Elevations | Theoretical Grade Elevations Adjusted for Dead Load Deflection and Grinding |
|---|---|---|---|---|
| BK. W. ABUT. EB | 38+08.78 | 0.00 | 595.82 | 595.84 |
| ℄ EXP. JT. | 38+11.10 | 0.00 | 595.88 | 595.90 |
| ℄ BRG. W. ABUT. EB | 38+12.87 | 0.00 | 595.92 | 595.94 |
| 1A | 38+22.87 | 0.00 | 596.17 | 596.25 |
| 1B | 38+32.87 | 0.00 | 596.42 | 596.55 |
| 1C | 38+42.87 | 0.00 | 596.66 | 596.84 |
| 1D | 38+52.87 | 0.00 | 596.90 | 597.12 |
| 1E | 38+62.87 | 0.00 | 597.13 | 597.38 |
| 1F | 38+72.87 | 0.00 | 597.36 | 597.63 |
| 1G | 38+82.87 | 0.00 | 597.58 | 597.87 |
| 1H | 38+92.87 | 0.00 | 597.80 | 598.09 |
| 1I | 39+02.87 | 0.00 | 598.02 | 598.30 |
| 1J | 39+12.87 | 0.00 | 598.23 | 598.49 |
| 1K | 39+22.87 | 0.00 | 598.44 | 598.67 |
| 1L | 39+32.87 | 0.00 | 598.65 | 598.84 |
| 1M | 39+42.87 | 0.00 | 598.85 | 599.00 |
| 1N | 39+52.87 | 0.00 | 599.05 | 599.17 |
| 1O | 39+62.87 | 0.00 | 599.24 | 599.33 |
| 1P | 39+72.87 | 0.00 | 599.43 | 599.49 |
| 1Q | 39+82.87 | 0.00 | 599.61 | 599.65 |
| ℄ BRG. PIER 1 EB | 39+94.62 | 0.00 | 599.83 | 599.85 |
| 1R | 40+04.62 | 0.00 | 600.00 | 600.03 |
| 1S | 40+14.62 | 0.00 | 600.18 | 600.20 |
| 1T | 40+24.62 | 0.00 | 600.34 | 600.38 |
| 1U | 40+34.62 | 0.00 | 600.51 | 600.57 |
| 1V | 40+44.62 | 0.00 | 600.67 | 600.75 |
| 1W | 40+54.62 | 0.00 | 600.83 | 600.93 |
| 1X | 40+64.62 | 0.00 | 600.98 | 601.11 |
| 1Y | 40+74.62 | 0.00 | 601.13 | 601.27 |
| 1Z | 40+84.62 | 0.00 | 601.27 | 601.43 |
| 1AA | 40+94.62 | 0.00 | 601.41 | 601.58 |
| 1AB | 41+04.62 | 0.00 | 601.55 | 601.72 |
| 1AC | 41+14.62 | 0.00 | 601.68 | 601.84 |
| 1AD | 41+24.62 | 0.00 | 601.81 | 601.95 |
| 1AE | 41+34.62 | 0.00 | 601.93 | 602.06 |
| 1AF | 41+44.62 | 0.00 | 602.05 | 602.15 |
| 1AG | 41+54.62 | 0.00 | 602.17 | 602.23 |
| 1AH | - | - | - | - |
| 1AI | - | - | - | - |
| 1AJ | - | - | - | - |
| ℄ W. BRG. PIER 2 EB | 41+66.20 | 0.00 | 602.30 | 602.32 |
| ℄ PIER 2 EB | 41+68.45 | 0.00 | 602.32 | 602.34 |

## GIRDER E3

| Location | Station | Offset | Theoretical Grade Elevations | Theoretical Grade Elevations Adjusted for Dead Load Deflection and Grinding |
|---|---|---|---|---|
| BK. W. ABUT. EB | 38+04.68 | 9.44 | 595.61 | 595.63 |
| ℄ EXP. JT. | 38+06.99 | 9.44 | 595.67 | 595.70 |
| ℄ BRG. W. ABUT. EB | 38+08.77 | 9.44 | 595.72 | 595.74 |
| 1A | 38+18.77 | 9.44 | 595.99 | 596.07 |
| 1B | 38+28.77 | 9.44 | 596.26 | 596.39 |
| 1C | 38+38.77 | 9.44 | 596.52 | 596.70 |
| 1D | 38+48.77 | 9.44 | 596.78 | 597.00 |
| 1E | 38+58.77 | 9.44 | 597.04 | 597.28 |
| 1F | 38+68.77 | 9.44 | 597.29 | 597.55 |
| 1G | 38+78.77 | 9.44 | 597.54 | 597.81 |
| 1H | 38+88.77 | 9.44 | 597.78 | 598.05 |
| 1I | 38+98.77 | 9.44 | 598.02 | 598.28 |
| 1J | 39+08.77 | 9.44 | 598.25 | 598.49 |
| 1K | 39+18.77 | 9.44 | 598.48 | 598.69 |
| 1L | 39+28.77 | 9.44 | 598.71 | 598.89 |
| 1M | 39+38.77 | 9.44 | 598.93 | 599.08 |
| 1N | 39+48.77 | 9.44 | 599.15 | 599.26 |
| 1O | 39+58.77 | 9.44 | 599.35 | 599.43 |
| 1P | 39+68.77 | 9.44 | 599.54 | 599.59 |
| 1Q | 39+78.77 | 9.44 | 599.73 | 599.76 |
| ℄ BRG. PIER 1 EB | 39+90.52 | 9.44 | 599.94 | 599.96 |
| 1R | 40+00.52 | 9.44 | 600.12 | 600.14 |
| 1S | 40+10.52 | 9.44 | 600.29 | 600.33 |
| 1T | 40+20.52 | 9.44 | 600.46 | 600.51 |
| 1U | 40+30.52 | 9.44 | 600.63 | 600.70 |
| 1V | 40+40.52 | 9.44 | 600.79 | 600.88 |
| 1W | 40+50.52 | 9.44 | 600.95 | 601.07 |
| 1X | 40+60.52 | 9.44 | 601.10 | 601.25 |
| 1Y | 40+70.52 | 9.44 | 601.25 | 601.42 |
| 1Z | 40+80.52 | 9.44 | 601.40 | 601.58 |
| 1AA | 40+90.52 | 9.44 | 601.54 | 601.73 |
| 1AB | 41+00.52 | 9.44 | 601.68 | 601.87 |
| 1AC | 41+10.52 | 9.44 | 601.81 | 602.00 |
| 1AD | 41+20.52 | 9.44 | 601.94 | 602.12 |
| 1AE | 41+30.52 | 9.44 | 602.07 | 602.22 |
| 1AF | 41+40.52 | 9.44 | 602.19 | 602.31 |
| 1AG | 41+50.52 | 9.44 | 602.31 | 602.39 |
| 1AH | 41+60.52 | 9.44 | 602.42 | 602.47 |
| 1AI | - | - | - | - |
| 1AJ | - | - | - | - |
| ℄ W. BRG. PIER 2 EB | 41+66.20 | 9.44 | 602.49 | 602.51 |
| ℄ PIER 2 EB | 41+68.45 | 9.44 | 602.51 | 602.53 |

## SOUTH EDGE OF NORTH LANE - EB

| Location | Station | Offset | Theoretical Grade Elevations | Theoretical Grade Elevations Adjusted for Dead Load Deflection and Grinding |
|---|---|---|---|---|
| BK. W. ABUT. EB | 38+03.56 | 12.00 | 595.55 | 595.57 |
| ℄ EXP. JT. | 38+05.88 | 12.00 | 595.62 | 595.64 |
| ℄ BRG. W. ABUT. EB | 38+07.65 | 12.00 | 595.67 | 595.69 |
| 1A | 38+17.65 | 12.00 | 595.94 | 596.02 |
| 1B | 38+27.65 | 12.00 | 596.22 | 596.34 |
| 1C | 38+37.65 | 12.00 | 596.48 | 596.66 |
| 1D | 38+47.65 | 12.00 | 596.75 | 596.96 |
| 1E | 38+57.65 | 12.00 | 597.01 | 597.25 |
| 1F | 38+67.65 | 12.00 | 597.27 | 597.53 |
| 1G | 38+77.65 | 12.00 | 597.52 | 597.79 |
| 1H | 38+87.65 | 12.00 | 597.77 | 598.04 |
| 1I | 38+97.65 | 12.00 | 598.01 | 598.27 |
| 1J | 39+07.65 | 12.00 | 598.25 | 598.49 |
| 1K | 39+17.65 | 12.00 | 598.49 | 598.70 |
| 1L | 39+27.65 | 12.00 | 598.72 | 598.90 |
| 1M | 39+37.65 | 12.00 | 598.95 | 599.09 |
| 1N | 39+47.65 | 12.00 | 599.18 | 599.29 |
| 1O | 39+57.65 | 12.00 | 599.38 | 599.46 |
| 1P | 39+67.65 | 12.00 | 599.57 | 599.62 |
| 1Q | 39+77.65 | 12.00 | 599.76 | 599.79 |
| ℄ BRG. PIER 1 EB | 39+89.40 | 12.00 | 599.97 | 599.99 |
| 1R | 39+99.40 | 12.00 | 600.15 | 600.18 |
| 1S | 40+09.40 | 12.00 | 600.33 | 600.36 |
| 1T | 40+19.40 | 12.00 | 600.50 | 600.54 |
| 1U | 40+29.40 | 12.00 | 600.66 | 600.73 |
| 1V | 40+39.40 | 12.00 | 600.83 | 600.92 |
| 1W | 40+49.40 | 12.00 | 600.98 | 601.10 |
| 1X | 40+59.40 | 12.00 | 601.14 | 601.28 |
| 1Y | 40+69.40 | 12.00 | 601.29 | 601.45 |
| 1Z | 40+79.40 | 12.00 | 601.44 | 601.62 |
| 1AA | 40+89.40 | 12.00 | 601.58 | 601.77 |
| 1AB | 40+99.40 | 12.00 | 601.72 | 601.91 |
| 1AC | 41+09.40 | 12.00 | 601.85 | 602.04 |
| 1AD | 41+19.40 | 12.00 | 601.98 | 602.15 |
| 1AE | 41+29.40 | 12.00 | 602.11 | 602.26 |
| 1AF | 41+39.40 | 12.00 | 602.23 | 602.35 |
| 1AG | 41+49.40 | 12.00 | 602.35 | 602.43 |
| 1AH | 41+59.40 | 12.00 | 602.46 | 602.51 |
| 1AI | - | - | - | - |
| 1AJ | - | - | - | - |
| ℄ W. BRG. PIER 2 EB | 41+66.20 | 12.00 | 602.54 | 602.56 |
| ℄ PIER 2 EB | 41+68.45 | 12.00 | 602.56 | 602.58 |

### NOTES:

1. All Elevations and Offsets are in feet.
2. Offsets are measured with respect to the I-80 EB PGL. Negative offsets are left and positive are right of the PGL.

# FOR INFORMATION ONLY

WSP USA Inc.
30 N. LASALLE STREET
SUITE 4200
CHICAGO, IL 60602
TEL: (312) 782-8150
FAX: (312) 782-1684

| | | | |
|---|---|---|---|
| USER NAME = USCP702533 | DESIGNED - LAS | REVISED - | |
| | CHECKED - TB | REVISED - | |
| PLOT SCALE = 8:0 ':" / in. | DRAWN - GM | REVISED - | |
| PLOT DATE = 10/11/2024 | CHECKED - LAS | REVISED - | |

**STATE OF ILLINOIS**
**DEPARTMENT OF TRANSPORTATION**

**TOP OF SLAB ELEVATIONS - UNIT 1 EB**
**STRUCTURE NUMBER 099-8309 WB AND 099-8325 EB**

SHEET S-16 OF S-87 SHEETS

| F.A.I RTE. | SECTION | COUNTY | TOTAL SHEETS | SHEET NO. |
|---|---|---|---|---|
| I-80 | (99-3DEFP) HF 23 | WILL | 89 | 18 |
| | | CONTRACT NO. 62W52 | | |
| | ILLINOIS | FED. AID PROJECT | | |

MODEL: Default
FILE NAME: pw://transystems-pw.bentley.com:transyscorp-pw1-hosted/Documents/Projects_2018/CH401/401180022/03-WSP/CAD/62W52-SF-3/Sheets/0998309-62W52-S016-DBE103.dgn

## GIRDER E4

| Location | Station | Offset | Theoretical Grade Elevations | Theoretical Grade Elevations Adjusted for Dead Load Deflection and Grinding |
|---|---|---|---|---|
| BK. W. ABUT. EB | 38+00.46 | 19.15 | 595.38 | 595.40 |
| ℄ EXP. JT. | 38+02.77 | 19.15 | 595.45 | 595.47 |
| ℄ BRG. W. ABUT. EB | 38+04.55 | 19.15 | 595.50 | 595.52 |
| 1A | 38+14.55 | 19.15 | 595.79 | 595.86 |
| 1B | 38+24.55 | 19.15 | 596.08 | 596.20 |
| 1C | 38+34.55 | 19.15 | 596.37 | 596.53 |
| 1D | 38+44.55 | 19.15 | 596.65 | 596.85 |
| 1E | 38+54.55 | 19.15 | 596.92 | 597.15 |
| 1F | 38+64.55 | 19.15 | 597.20 | 597.44 |
| 1G | 38+74.55 | 19.15 | 597.47 | 597.72 |
| 1H | 38+84.55 | 19.15 | 597.73 | 597.98 |
| 1I | 38+94.55 | 19.15 | 597.99 | 598.23 |
| 1J | 39+04.55 | 19.15 | 598.25 | 598.47 |
| 1K | 39+14.55 | 19.15 | 598.50 | 598.70 |
| 1L | 39+24.55 | 19.15 | 598.75 | 598.91 |
| 1M | 39+34.55 | 19.15 | 598.99 | 599.12 |
| 1N | 39+44.55 | 19.15 | 599.21 | 599.31 |
| 1O | 39+54.55 | 19.15 | 599.43 | 599.50 |
| 1P | 39+64.55 | 19.15 | 599.62 | 599.67 |
| 1Q | 39+74.55 | 19.15 | 599.81 | 599.84 |
| ℄ BRG. PIER 1 EB | 39+86.30 | 19.15 | 600.02 | 600.04 |
| 1R | 39+96.30 | 19.15 | 600.20 | 600.23 |
| 1S | 40+06.30 | 19.15 | 600.38 | 600.42 |
| 1T | 40+16.30 | 19.15 | 600.55 | 600.61 |
| 1U | 40+26.30 | 19.15 | 600.72 | 600.80 |
| 1V | 40+36.30 | 19.15 | 600.88 | 600.99 |
| 1W | 40+46.30 | 19.15 | 601.04 | 601.18 |
| 1X | 40+56.30 | 19.15 | 601.20 | 601.36 |
| 1Y | 40+66.30 | 19.15 | 601.35 | 601.53 |
| 1Z | 40+76.30 | 19.15 | 601.50 | 601.70 |
| 1AA | 40+86.30 | 19.15 | 601.64 | 601.86 |
| 1AB | 40+96.30 | 19.15 | 601.78 | 602.00 |
| 1AC | 41+06.30 | 19.15 | 601.92 | 602.13 |
| 1AD | 41+16.30 | 19.15 | 602.05 | 602.25 |
| 1AE | 41+26.30 | 19.15 | 602.18 | 602.35 |
| 1AF | 41+36.30 | 19.15 | 602.30 | 602.44 |
| 1AG | 41+46.30 | 19.15 | 602.42 | 602.53 |
| 1AH | 41+56.30 | 19.15 | 602.54 | 602.60 |
| 1AI | - | - | - | - |
| 1AJ | - | - | - | - |
| ℄ W. BRG. PIER 2 EB | 41+66.20 | 19.15 | 602.65 | 602.67 |
| ℄ PIER 2 EB | 41+68.45 | 19.15 | 602.67 | 602.69 |

## CROWN - EB

| Location | Station | Offset | Theoretical Grade Elevations | Theoretical Grade Elevations Adjusted for Dead Load Deflection and Grinding |
|---|---|---|---|---|
| BK. W. ABUT. EB | 37+98.35 | 24.00 | 595.25 | 595.28 |
| ℄ EXP. JT. | 38+00.66 | 24.00 | 595.33 | 595.35 |
| ℄ BRG. W. ABUT. EB | 38+02.43 | 24.00 | 595.38 | 595.40 |
| 1A | 38+12.43 | 24.00 | 595.68 | 595.75 |
| 1B | 38+22.43 | 24.00 | 595.98 | 596.10 |
| 1C | 38+32.43 | 24.00 | 596.28 | 596.44 |
| 1D | 38+42.43 | 24.00 | 596.57 | 596.77 |
| 1E | 38+52.43 | 24.00 | 596.86 | 597.08 |
| 1F | 38+62.43 | 24.00 | 597.15 | 597.38 |
| 1G | 38+72.43 | 24.00 | 597.43 | 597.67 |
| 1H | 38+82.43 | 24.00 | 597.70 | 597.94 |
| 1I | 38+92.43 | 24.00 | 597.97 | 598.20 |
| 1J | 39+02.43 | 24.00 | 598.24 | 598.45 |
| 1K | 39+12.43 | 24.00 | 598.51 | 598.69 |
| 1L | 39+22.43 | 24.00 | 598.77 | 598.92 |
| 1M | 39+32.43 | 24.00 | 599.01 | 599.13 |
| 1N | 39+42.43 | 24.00 | 599.24 | 599.33 |
| 1O | 39+52.43 | 24.00 | 599.46 | 599.52 |
| 1P | 39+62.43 | 24.00 | 599.65 | 599.69 |
| 1Q | 39+72.43 | 24.00 | 599.84 | 599.87 |
| ℄ BRG. PIER 1 EB | 39+84.18 | 24.00 | 600.06 | 600.08 |
| 1R | 39+94.18 | 24.00 | 600.24 | 600.27 |
| 1S | 40+04.18 | 24.00 | 600.42 | 600.46 |
| 1T | 40+14.18 | 24.00 | 600.59 | 600.65 |
| 1U | 40+24.18 | 24.00 | 600.76 | 600.85 |
| 1V | 40+34.18 | 24.00 | 600.92 | 601.04 |
| 1W | 40+44.18 | 24.00 | 601.08 | 601.23 |
| 1X | 40+54.18 | 24.00 | 601.24 | 601.42 |
| 1Y | 40+64.18 | 24.00 | 601.39 | 601.60 |
| 1Z | 40+74.18 | 24.00 | 601.54 | 601.77 |
| 1AA | 40+84.18 | 24.00 | 601.68 | 601.93 |
| 1AB | 40+94.18 | 24.00 | 601.82 | 602.08 |
| 1AC | 41+04.18 | 24.00 | 601.96 | 602.20 |
| 1AD | 41+14.18 | 24.00 | 602.09 | 602.33 |
| 1AE | 41+24.18 | 24.00 | 602.22 | 602.43 |
| 1AF | 41+34.18 | 24.00 | 602.35 | 602.52 |
| 1AG | 41+44.18 | 24.00 | 602.47 | 602.60 |
| 1AH | 41+54.18 | 24.00 | 602.58 | 602.67 |
| 1AI | - | - | - | - |
| 1AJ | - | - | - | - |
| ℄ W. BRG. PIER 2 EB | 41+66.20 | 24.00 | 602.72 | 602.74 |
| ℄ PIER 2 EB | 41+68.45 | 24.00 | 602.74 | 602.76 |

## GIRDER E5

| Location | Station | Offset | Theoretical Grade Elevations | Theoretical Grade Elevations Adjusted for Dead Load Deflection and Grinding |
|---|---|---|---|---|
| BK. W. ABUT. EB | 37+96.23 | 28.85 | 595.12 | 595.14 |
| ℄ EXP. JT. | 37+98.55 | 28.85 | 595.19 | 595.21 |
| ℄ BRG. W. ABUT. EB | 38+00.32 | 28.85 | 595.24 | 595.26 |
| 1A | 38+10.32 | 28.85 | 595.55 | 595.62 |
| 1B | 38+20.32 | 28.85 | 595.85 | 595.97 |
| 1C | 38+30.32 | 28.85 | 596.15 | 596.30 |
| 1D | 38+40.32 | 28.85 | 596.44 | 596.63 |
| 1E | 38+50.32 | 28.85 | 596.73 | 596.95 |
| 1F | 38+60.32 | 28.85 | 597.01 | 597.25 |
| 1G | 38+70.32 | 28.85 | 597.29 | 597.54 |
| 1H | 38+80.32 | 28.85 | 597.57 | 597.81 |
| 1I | 38+90.32 | 28.85 | 597.84 | 598.07 |
| 1J | 39+00.32 | 28.85 | 598.11 | 598.32 |
| 1K | 39+10.32 | 28.85 | 598.38 | 598.56 |
| 1L | 39+20.32 | 28.85 | 598.64 | 598.79 |
| 1M | 39+30.32 | 28.85 | 598.89 | 599.01 |
| 1N | 39+40.32 | 28.85 | 599.12 | 599.21 |
| 1O | 39+50.32 | 28.85 | 599.34 | 599.40 |
| 1P | 39+60.32 | 28.85 | 599.54 | 599.58 |
| 1Q | 39+70.32 | 28.85 | 599.73 | 599.76 |
| ℄ BRG. PIER 1 EB | 39+82.07 | 28.85 | 599.95 | 599.97 |
| 1R | 39+92.07 | 28.85 | 600.13 | 600.16 |
| 1S | 40+02.07 | 28.85 | 600.31 | 600.35 |
| 1T | 40+12.07 | 28.85 | 600.48 | 600.54 |
| 1U | 40+22.07 | 28.85 | 600.65 | 600.74 |
| 1V | 40+32.07 | 28.85 | 600.81 | 600.93 |
| 1W | 40+42.07 | 28.85 | 600.98 | 601.13 |
| 1X | 40+52.07 | 28.85 | 601.13 | 601.32 |
| 1Y | 40+62.07 | 28.85 | 601.29 | 601.49 |
| 1Z | 40+72.07 | 28.85 | 601.44 | 601.67 |
| 1AA | 40+82.07 | 28.85 | 601.58 | 601.82 |
| 1AB | 40+92.07 | 28.85 | 601.72 | 601.97 |
| 1AC | 41+02.07 | 28.85 | 601.86 | 602.10 |
| 1AD | 41+12.07 | 28.85 | 601.99 | 602.23 |
| 1AE | 41+22.07 | 28.85 | 602.12 | 602.33 |
| 1AF | 41+32.07 | 28.85 | 602.25 | 602.42 |
| 1AG | 41+42.07 | 28.85 | 602.37 | 602.50 |
| 1AH | 41+52.07 | 28.85 | 602.49 | 602.58 |
| 1AI | - | - | - | - |
| 1AJ | - | - | - | - |
| ℄ W. BRG. PIER 2 EB | 41+66.20 | 28.85 | 602.65 | 602.67 |
| ℄ PIER 2 EB | 41+68.45 | 28.85 | 602.67 | 602.69 |

### NOTES:

1. All Elevations and Offsets are in feet.
2. Offsets are measured with respect to the I-80 EB PGL. Negative offsets are left and positive are right of the PGL.

# FOR INFORMATION ONLY

WSP USA Inc.
30 N. LASALLE STREET
SUITE 4200
CHICAGO, IL 60602
TEL: (312) 782-8150
FAX: (312) 782-1684

| | | | |
|---|---|---|---|
| USER NAME = USCP702533 | DESIGNED - LAS | REVISED - | |
| | CHECKED - TB | REVISED - | |
| PLOT SCALE = 8:0 ':" / in. | DRAWN - GM | REVISED - | |
| PLOT DATE = 10/11/2024 | CHECKED - LAS | REVISED - | |

**STATE OF ILLINOIS**
**DEPARTMENT OF TRANSPORTATION**

**TOP OF SLAB ELEVATIONS - UNIT 1 EB**
**STRUCTURE NUMBER 099-8309 WB AND 099-8325 EB**

SHEET S-17 OF S-87 SHEETS

| F.A.I RTE. | SECTION | COUNTY | TOTAL SHEETS | SHEET NO. |
|---|---|---|---|---|
| I-80 | (99-3DEFP) HF 23 | WILL | 89 | 19 |
| | | CONTRACT NO. 62W52 | | |
| | ILLINOIS | FED. AID PROJECT | | |

MODEL: Default
FILE NAME: pw://transystems-pw.bentley.com:transyscorp-pw1-hosted/Documents/Projects_2018/CH401/401180022/03-WSP/CAD/62W52-SF-3/Sheets/0998309-62W52-S017-DSE104.dgn

## NORTH EDGE OF SOUTH LANE - EB

| Location | Station | Offset | Theoretical Grade Elevations | Theoretical Grade Elevations Adjusted for Dead Load Deflection and Grinding |
|---|---|---|---|---|
| BK. W. ABUT. EB | 37+93.13 | 36.00 | 594.91 | 594.93 |
| ℄ EXP. JT. | 37+95.44 | 36.00 | 594.99 | 595.01 |
| ℄ BRG. W. ABUT. EB | 37+97.22 | 36.00 | 595.04 | 595.06 |
| 1A | 38+07.22 | 36.00 | 595.35 | 595.42 |
| 1B | 38+17.22 | 36.00 | 595.65 | 595.77 |
| 1C | 38+27.22 | 36.00 | 595.95 | 596.11 |
| 1D | 38+37.22 | 36.00 | 596.24 | 596.44 |
| 1E | 38+47.22 | 36.00 | 596.53 | 596.75 |
| 1F | 38+57.22 | 36.00 | 596.82 | 597.05 |
| 1G | 38+67.22 | 36.00 | 597.10 | 597.34 |
| 1H | 38+77.22 | 36.00 | 597.38 | 597.62 |
| 1I | 38+87.22 | 36.00 | 597.65 | 597.88 |
| 1J | 38+97.22 | 36.00 | 597.92 | 598.13 |
| 1K | 39+07.22 | 36.00 | 598.19 | 598.37 |
| 1L | 39+17.22 | 36.00 | 598.45 | 598.60 |
| 1M | 39+27.22 | 36.00 | 598.71 | 598.82 |
| 1N | 39+37.22 | 36.00 | 598.94 | 599.03 |
| 1O | 39+47.22 | 36.00 | 599.17 | 599.22 |
| 1P | 39+57.22 | 36.00 | 599.37 | 599.41 |
| 1Q | 39+67.22 | 36.00 | 599.56 | 599.59 |
| ℄ BRG. PIER 1 EB | 39+78.97 | 36.00 | 599.78 | 599.80 |
| 1R | 39+88.97 | 36.00 | 599.97 | 600.00 |
| 1S | 39+98.97 | 36.00 | 600.14 | 600.19 |
| 1T | 40+08.97 | 36.00 | 600.32 | 600.39 |
| 1U | 40+18.97 | 36.00 | 600.49 | 600.59 |
| 1V | 40+28.97 | 36.00 | 600.66 | 600.79 |
| 1W | 40+38.97 | 36.00 | 600.82 | 600.99 |
| 1X | 40+48.97 | 36.00 | 600.98 | 601.18 |
| 1Y | 40+58.97 | 36.00 | 601.13 | 601.37 |
| 1Z | 40+68.97 | 36.00 | 601.28 | 601.54 |
| 1AA | 40+78.97 | 36.00 | 601.43 | 601.70 |
| 1AB | 40+88.97 | 36.00 | 601.57 | 601.86 |
| 1AC | 40+98.97 | 36.00 | 601.71 | 601.99 |
| 1AD | 41+08.97 | 36.00 | 601.85 | 602.11 |
| 1AE | 41+18.97 | 36.00 | 601.98 | 602.22 |
| 1AF | 41+28.97 | 36.00 | 602.10 | 602.31 |
| 1AG | 41+38.97 | 36.00 | 602.23 | 602.39 |
| 1AH | 41+48.97 | 36.00 | 602.34 | 602.47 |
| 1AI | 41+58.97 | 36.00 | 602.46 | 602.53 |
| 1AJ | - | - | - | - |
| ℄ W. BRG. PIER 2 EB | 41+66.20 | 36.00 | 602.54 | 602.56 |
| ℄ PIER 2 EB | 41+68.45 | 36.00 | 602.56 | 602.58 |

## GIRDER E6

| Location | Station | Offset | Theoretical Grade Elevations | Theoretical Grade Elevations Adjusted for Dead Load Deflection and Grinding |
|---|---|---|---|---|
| BK. W. ABUT. EB | 37+92.01 | 38.56 | 594.83 | 594.85 |
| ℄ EXP. JT. | 37+94.33 | 38.56 | 594.90 | 594.92 |
| ℄ BRG. W. ABUT. EB | 37+96.10 | 38.56 | 594.95 | 594.98 |
| 1A | 38+06.10 | 38.56 | 595.26 | 595.33 |
| 1B | 38+16.10 | 38.56 | 595.56 | 595.68 |
| 1C | 38+26.10 | 38.56 | 595.86 | 596.02 |
| 1D | 38+36.10 | 38.56 | 596.16 | 596.35 |
| 1E | 38+46.10 | 38.56 | 596.45 | 596.67 |
| 1F | 38+56.10 | 38.56 | 596.74 | 596.97 |
| 1G | 38+66.10 | 38.56 | 597.02 | 597.26 |
| 1H | 38+76.10 | 38.56 | 597.30 | 597.53 |
| 1I | 38+86.10 | 38.56 | 597.57 | 597.80 |
| 1J | 38+96.10 | 38.56 | 597.84 | 598.04 |
| 1K | 39+06.10 | 38.56 | 598.11 | 598.29 |
| 1L | 39+16.10 | 38.56 | 598.37 | 598.52 |
| 1M | 39+26.10 | 38.56 | 598.63 | 598.74 |
| 1N | 39+36.10 | 38.56 | 598.86 | 598.95 |
| 1O | 39+46.10 | 38.56 | 599.09 | 599.15 |
| 1P | 39+56.10 | 38.56 | 599.30 | 599.34 |
| 1Q | 39+66.10 | 38.56 | 599.49 | 599.52 |
| ℄ BRG. PIER 1 EB | 39+77.85 | 38.56 | 599.71 | 599.73 |
| 1R | 39+87.85 | 38.56 | 599.89 | 599.93 |
| 1S | 39+97.85 | 38.56 | 600.07 | 600.12 |
| 1T | 40+07.85 | 38.56 | 600.25 | 600.32 |
| 1U | 40+17.85 | 38.56 | 600.42 | 600.52 |
| 1V | 40+27.85 | 38.56 | 600.59 | 600.72 |
| 1W | 40+37.85 | 38.56 | 600.75 | 600.92 |
| 1X | 40+47.85 | 38.56 | 600.91 | 601.11 |
| 1Y | 40+57.85 | 38.56 | 601.06 | 601.30 |
| 1Z | 40+67.85 | 38.56 | 601.21 | 601.47 |
| 1AA | 40+77.85 | 38.56 | 601.36 | 601.64 |
| 1AB | 40+87.85 | 38.56 | 601.50 | 601.79 |
| 1AC | 40+97.85 | 38.56 | 601.64 | 601.92 |
| 1AD | 41+07.85 | 38.56 | 601.78 | 602.05 |
| 1AE | 41+17.85 | 38.56 | 601.91 | 602.15 |
| 1AF | 41+27.85 | 38.56 | 602.04 | 602.25 |
| 1AG | 41+37.85 | 38.56 | 602.16 | 602.33 |
| 1AH | 41+47.85 | 38.56 | 602.28 | 602.40 |
| 1AI | 41+57.85 | 38.56 | 602.39 | 602.46 |
| 1AJ | - | - | - | - |
| ℄ W. BRG. PIER 2 EB | 41+66.20 | 38.56 | 602.49 | 602.51 |
| ℄ PIER 2 EB | 41+68.45 | 38.56 | 602.51 | 602.53 |

## GIRDER E7

| Location | Station | Offset | Theoretical Grade Elevations | Theoretical Grade Elevations Adjusted for Dead Load Deflection and Grinding |
|---|---|---|---|---|
| BK. W. ABUT. EB | 37+87.79 | 48.27 | 594.50 | 594.52 |
| ℄ EXP. JT. | 37+90.11 | 48.27 | 594.58 | 594.60 |
| ℄ BRG. W. ABUT. EB | 37+91.88 | 48.27 | 594.63 | 594.65 |
| 1A | 38+01.88 | 48.27 | 594.94 | 595.01 |
| 1B | 38+11.88 | 48.27 | 595.24 | 595.36 |
| 1C | 38+21.88 | 48.27 | 595.54 | 595.70 |
| 1D | 38+31.88 | 48.27 | 595.84 | 596.03 |
| 1E | 38+41.88 | 48.27 | 596.13 | 596.35 |
| 1F | 38+51.88 | 48.27 | 596.42 | 596.65 |
| 1G | 38+61.88 | 48.27 | 596.70 | 596.94 |
| 1H | 38+71.88 | 48.27 | 596.99 | 597.22 |
| 1I | 38+81.88 | 48.27 | 597.26 | 597.48 |
| 1J | 38+91.88 | 48.27 | 597.53 | 597.73 |
| 1K | 39+01.88 | 48.27 | 597.80 | 597.97 |
| 1L | 39+11.88 | 48.27 | 598.07 | 598.21 |
| 1M | 39+21.88 | 48.27 | 598.33 | 598.44 |
| 1N | 39+31.88 | 48.27 | 598.57 | 598.65 |
| 1O | 39+41.88 | 48.27 | 598.80 | 598.86 |
| 1P | 39+51.88 | 48.27 | 599.02 | 599.06 |
| 1Q | 39+61.88 | 48.27 | 599.22 | 599.24 |
| ℄ BRG. PIER 1 EB | 39+73.63 | 48.27 | 599.44 | 599.46 |
| 1R | 39+83.63 | 48.27 | 599.62 | 599.66 |
| 1S | 39+93.63 | 48.27 | 599.80 | 599.86 |
| 1T | 40+03.63 | 48.27 | 599.98 | 600.06 |
| 1U | 40+13.63 | 48.27 | 600.15 | 600.27 |
| 1V | 40+23.63 | 48.27 | 600.32 | 600.47 |
| 1W | 40+33.63 | 48.27 | 600.49 | 600.68 |
| 1X | 40+43.63 | 48.27 | 600.65 | 600.88 |
| 1Y | 40+53.63 | 48.27 | 600.80 | 601.07 |
| 1Z | 40+63.63 | 48.27 | 600.96 | 601.25 |
| 1AA | 40+73.63 | 48.27 | 601.11 | 601.41 |
| 1AB | 40+83.63 | 48.27 | 601.25 | 601.57 |
| 1AC | 40+93.63 | 48.27 | 601.39 | 601.71 |
| 1AD | 41+03.63 | 48.27 | 601.53 | 601.83 |
| 1AE | 41+13.63 | 48.27 | 601.66 | 601.94 |
| 1AF | 41+23.63 | 48.27 | 601.79 | 602.04 |
| 1AG | 41+33.63 | 48.27 | 601.91 | 602.12 |
| 1AH | 41+43.63 | 48.27 | 602.04 | 602.19 |
| 1AI | 41+53.63 | 48.27 | 602.15 | 602.25 |
| 1AJ | - | - | - | - |
| ℄ W. BRG. PIER 2 EB | 41+66.20 | 48.27 | 602.29 | 602.31 |
| ℄ PIER 2 EB | 41+68.45 | 48.27 | 602.32 | 602.34 |

### NOTES:

1. All Elevations and Offsets are in feet.
2. Offsets are measured with respect to the I-80 EB PGL. Negative offsets are left and positive are right of the PGL.

# FOR INFORMATION ONLY

WSP USA Inc.
30 N. LASALLE STREET
SUITE 4200
CHICAGO, IL 60602
TEL: (312) 782-8150
FAX: (312) 782-1684

| | | | |
|---|---|---|---|
| USER NAME = USCP702533 | DESIGNED - LAS | REVISED - | |
| | CHECKED - TB | REVISED - | |
| PLOT SCALE = 8:0 ':" / in. | DRAWN - GM | REVISED - | |
| PLOT DATE = 10/11/2024 | CHECKED - LAS | REVISED - | |

**STATE OF ILLINOIS**
**DEPARTMENT OF TRANSPORTATION**

**TOP OF SLAB ELEVATIONS - UNIT 1 EB**
**STRUCTURE NUMBER 099-8309 WB AND 099-8325 EB**

SHEET S-18 OF S-87 SHEETS

| F.A.I RTE. | SECTION | COUNTY | TOTAL SHEETS | SHEET NO. |
|---|---|---|---|---|
| I-80 | (99-3DEFP) HF 23 | WILL | 89 | 20 |
| | | CONTRACT NO. 62W52 | | |
| | ILLINOIS | FED. AID PROJECT | | |

MODEL: Default
FILE NAME: pw://transystems-pw.bentley.com:transyscorp-pw1-hosted/Documents/Projects_2018/CH401/401180022/03-WSP/CAD/62W52-SF-3/Sheets/0998309-62W52-S018-DSE105.dgn

## PROP. BL CENTER RAMP B

| Location | Station | Offset | Theoretical Grade Elevations | Theoretical Grade Elevations Adjusted for Dead Load Deflection and Grinding |
|---|---|---|---|---|
| BK. W. ABUT. EB | 37+86.78 | 50.60 | 594.43 | 594.45 |
| ℄ EXP. JT. | 37+89.12 | 50.55 | 594.50 | 594.52 |
| ℄ BRG. W. ABUT. EB | 37+90.91 | 50.52 | 594.56 | 594.58 |
| 1A | 38+00.90 | 50.32 | 594.87 | 594.94 |
| 1B | 38+10.90 | 50.12 | 595.18 | 595.29 |
| 1C | 38+20.90 | 49.92 | 595.48 | 595.64 |
| 1D | 38+30.90 | 49.72 | 595.78 | 595.97 |
| 1E | 38+40.90 | 49.52 | 596.08 | 596.30 |
| 1F | 38+50.89 | 49.32 | 596.37 | 596.60 |
| 1G | 38+60.89 | 49.12 | 596.66 | 596.90 |
| 1H | 38+70.89 | 48.92 | 596.94 | 597.18 |
| 1I | 38+80.89 | 48.72 | 597.23 | 597.45 |
| 1J | 38+90.89 | 48.52 | 597.50 | 597.70 |
| 1K | 39+00.88 | 48.32 | 597.78 | 597.95 |
| 1L | 39+10.88 | 48.12 | 598.04 | 598.18 |
| 1M | - | - | - | - |
| 1N | - | - | - | - |
| 1O | - | - | - | - |
| 1P | - | - | - | - |
| 1Q | - | - | - | - |
| ℄ BRG. PIER 1 EB | - | - | - | - |
| 1R | - | - | - | - |
| 1S | - | - | - | - |
| 1T | - | - | - | - |
| 1U | - | - | - | - |
| 1V | - | - | - | - |
| 1W | - | - | - | - |
| 1X | - | - | - | - |
| 1Y | - | - | - | - |
| 1Z | - | - | - | - |
| 1AA | - | - | - | - |
| 1AB | - | - | - | - |
| 1AC | - | - | - | - |
| 1AD | - | - | - | - |
| 1AE | - | - | - | - |
| 1AF | - | - | - | - |
| 1AG | - | - | - | - |
| 1AH | - | - | - | - |
| 1AI | - | - | - | - |
| 1AJ | - | - | - | - |
| ℄ W. BRG. PIER 2 EB | - | - | - | - |
| ℄ PIER 2 EB | - | - | - | - |

## GIRDER E8

| Location | Station | Offset | Theoretical Grade Elevations | Theoretical Grade Elevations Adjusted for Dead Load Deflection and Grinding |
|---|---|---|---|---|
| BK. W. ABUT. EB | 37+83.57 | 57.98 | 594.18 | 594.20 |
| ℄ EXP. JT. | 37+85.89 | 57.98 | 594.25 | 594.27 |
| ℄ BRG. W. ABUT. EB | 37+87.66 | 57.98 | 594.31 | 594.33 |
| 1A | 37+97.66 | 57.98 | 594.61 | 594.68 |
| 1B | 38+07.66 | 57.98 | 594.92 | 595.03 |
| 1C | 38+17.66 | 57.98 | 595.22 | 595.37 |
| 1D | 38+27.66 | 57.98 | 595.52 | 595.70 |
| 1E | 38+37.66 | 57.98 | 595.81 | 596.02 |
| 1F | 38+47.66 | 57.98 | 596.10 | 596.32 |
| 1G | 38+57.66 | 57.98 | 596.39 | 596.61 |
| 1H | 38+67.66 | 57.98 | 596.67 | 596.89 |
| 1I | 38+77.66 | 57.98 | 596.95 | 597.16 |
| 1J | 38+87.66 | 57.98 | 597.23 | 597.41 |
| 1K | 38+97.66 | 57.98 | 597.50 | 597.65 |
| 1L | 39+07.66 | 57.98 | 597.76 | 597.89 |
| 1M | 39+17.66 | 57.98 | 598.02 | 598.12 |
| 1N | 39+27.66 | 57.98 | 598.28 | 598.35 |
| 1O | 39+37.66 | 57.98 | 598.51 | 598.56 |
| 1P | 39+47.66 | 57.98 | 598.74 | 598.77 |
| 1Q | 39+57.66 | 57.98 | 598.94 | 598.96 |
| ℄ BRG. PIER 1 EB | 39+69.41 | 57.98 | 599.16 | 599.19 |
| 1R | 39+79.41 | 57.98 | 599.35 | 599.39 |
| 1S | 39+89.41 | 57.98 | 599.53 | 599.59 |
| 1T | 39+99.41 | 57.98 | 599.71 | 599.80 |
| 1U | 40+09.41 | 57.98 | 599.89 | 600.01 |
| 1V | 40+19.41 | 57.98 | 600.06 | 600.22 |
| 1W | 40+29.41 | 57.98 | 600.22 | 600.43 |
| 1X | 40+39.41 | 57.98 | 600.39 | 600.63 |
| 1Y | 40+49.41 | 57.98 | 600.54 | 600.83 |
| 1Z | 40+59.41 | 57.98 | 600.70 | 601.01 |
| 1AA | 40+69.41 | 57.98 | 600.85 | 601.19 |
| 1AB | 40+79.41 | 57.98 | 601.00 | 601.35 |
| 1AC | 40+89.41 | 57.98 | 601.14 | 601.49 |
| 1AD | 40+99.41 | 57.98 | 601.28 | 601.62 |
| 1AE | 41+09.41 | 57.98 | 601.41 | 601.73 |
| 1AF | 41+19.41 | 57.98 | 601.54 | 601.83 |
| 1AG | 41+29.41 | 57.98 | 601.67 | 601.91 |
| 1AH | 41+39.41 | 57.98 | 601.79 | 601.98 |
| 1AI | 41+49.41 | 57.98 | 601.91 | 602.04 |
| 1AJ | 41+59.41 | 57.98 | 602.02 | 602.09 |
| ℄ W. BRG. PIER 2 EB | 41+66.20 | 57.98 | 602.10 | 602.12 |
| ℄ PIER 2 EB | 41+68.45 | 57.98 | 602.12 | 602.14 |

## NORTH FACE OF SOUTH PARAPET - EB

| Location | Station | Offset | Theoretical Grade Elevations | Theoretical Grade Elevations Adjusted for Dead Load Deflection and Grinding |
|---|---|---|---|---|
| BK. W. ABUT. EB | 37+82.69 | 60.00 | 594.11 | 594.13 |
| ℄ EXP. JT. | 37+85.01 | 60.00 | 594.18 | 594.20 |
| ℄ BRG. W. ABUT. EB | 37+86.78 | 60.00 | 594.24 | 594.26 |
| 1A | 37+96.78 | 60.00 | 594.55 | 594.61 |
| 1B | 38+06.78 | 60.00 | 594.85 | 594.96 |
| 1C | 38+16.78 | 60.00 | 595.16 | 595.30 |
| 1D | 38+26.78 | 60.00 | 595.45 | 595.63 |
| 1E | 38+36.78 | 60.00 | 595.75 | 595.95 |
| 1F | 38+46.78 | 60.00 | 596.04 | 596.26 |
| 1G | 38+56.78 | 60.00 | 596.33 | 596.55 |
| 1H | 38+66.78 | 60.00 | 596.61 | 596.82 |
| 1I | 38+76.78 | 60.00 | 596.89 | 597.09 |
| 1J | 38+86.78 | 60.00 | 597.16 | 597.34 |
| 1K | 38+96.78 | 60.00 | 597.43 | 597.59 |
| 1L | 39+06.78 | 60.00 | 597.70 | 597.83 |
| 1M | 39+16.78 | 60.00 | 597.96 | 598.06 |
| 1N | 39+26.78 | 60.00 | 598.22 | 598.29 |
| 1O | 39+36.78 | 60.00 | 598.45 | 598.50 |
| 1P | 39+46.78 | 60.00 | 598.68 | 598.71 |
| 1Q | 39+56.78 | 60.00 | 598.88 | 598.91 |
| ℄ BRG. PIER 1 EB | 39+68.53 | 60.00 | 599.11 | 599.13 |
| 1R | 39+78.53 | 60.00 | 599.29 | 599.33 |
| 1S | 39+88.53 | 60.00 | 599.48 | 599.53 |
| 1T | 39+98.53 | 60.00 | 599.66 | 599.75 |
| 1U | 40+08.53 | 60.00 | 599.83 | 599.95 |
| 1V | 40+18.53 | 60.00 | 600.00 | 600.17 |
| 1W | 40+28.53 | 60.00 | 600.17 | 600.38 |
| 1X | 40+38.53 | 60.00 | 600.33 | 600.58 |
| 1Y | 40+48.53 | 60.00 | 600.49 | 600.78 |
| 1Z | 40+58.53 | 60.00 | 600.65 | 600.96 |
| 1AA | 40+68.53 | 60.00 | 600.80 | 601.14 |
| 1AB | 40+78.53 | 60.00 | 600.94 | 601.29 |
| 1AC | 40+88.53 | 60.00 | 601.09 | 601.44 |
| 1AD | 40+98.53 | 60.00 | 601.22 | 601.57 |
| 1AE | 41+08.53 | 60.00 | 601.36 | 601.68 |
| 1AF | 41+18.53 | 60.00 | 601.49 | 601.78 |
| 1AG | 41+28.53 | 60.00 | 601.62 | 601.86 |
| 1AH | 41+38.53 | 60.00 | 601.74 | 601.93 |
| 1AI | 41+48.53 | 60.00 | 601.86 | 601.99 |
| 1AJ | 41+58.53 | 60.00 | 601.97 | 602.04 |
| ℄ W. BRG. PIER 2 EB | 41+66.20 | 60.00 | 602.06 | 602.08 |
| ℄ PIER 2 EB | 41+68.45 | 60.00 | 602.08 | 602.10 |

### NOTES:

1. All Elevations and Offsets are in feet.
2. Offsets are measured with respect to the I-80 EB PGL. Negative offsets are left and positive are right of the PGL.

# FOR INFORMATION ONLY

WSP USA Inc.
30 N. LASALLE STREET
SUITE 4200
CHICAGO, IL 60602
TEL: (312) 782-8150
FAX: (312) 782-1684

| | | | |
|---|---|---|---|
| USER NAME = USCP702533 | DESIGNED - LAS | REVISED - | |
| | CHECKED - TB | REVISED - | |
| PLOT SCALE = 8:0 ':" / in. | DRAWN - GM | REVISED - | |
| PLOT DATE = 10/11/2024 | CHECKED - LAS | REVISED - | |

**STATE OF ILLINOIS**
**DEPARTMENT OF TRANSPORTATION**

**TOP OF SLAB ELEVATIONS - UNIT 1 EB**
**STRUCTURE NUMBER 099-8309 WB AND 099-8325 EB**

SHEET S-19 OF S-87 SHEETS

| F.A.I RTE. | SECTION | COUNTY | TOTAL SHEETS | SHEET NO. |
|---|---|---|---|---|
| I-80 | (99-3DEFP) HF 23 | WILL | 89 | 21 |
| | | CONTRACT NO. 62W52 | | |
| | ILLINOIS | FED. AID PROJECT | | |

MODEL: Default
FILE NAME: pw://transystems-pw.bentley.com:transyscorp-pw1-hosted/Documents/Projects_2018/CH401/401180022/03-WSP/CAD/62W52-SF-3/Sheets/0998309-62W52-S019-DEE106.dgn

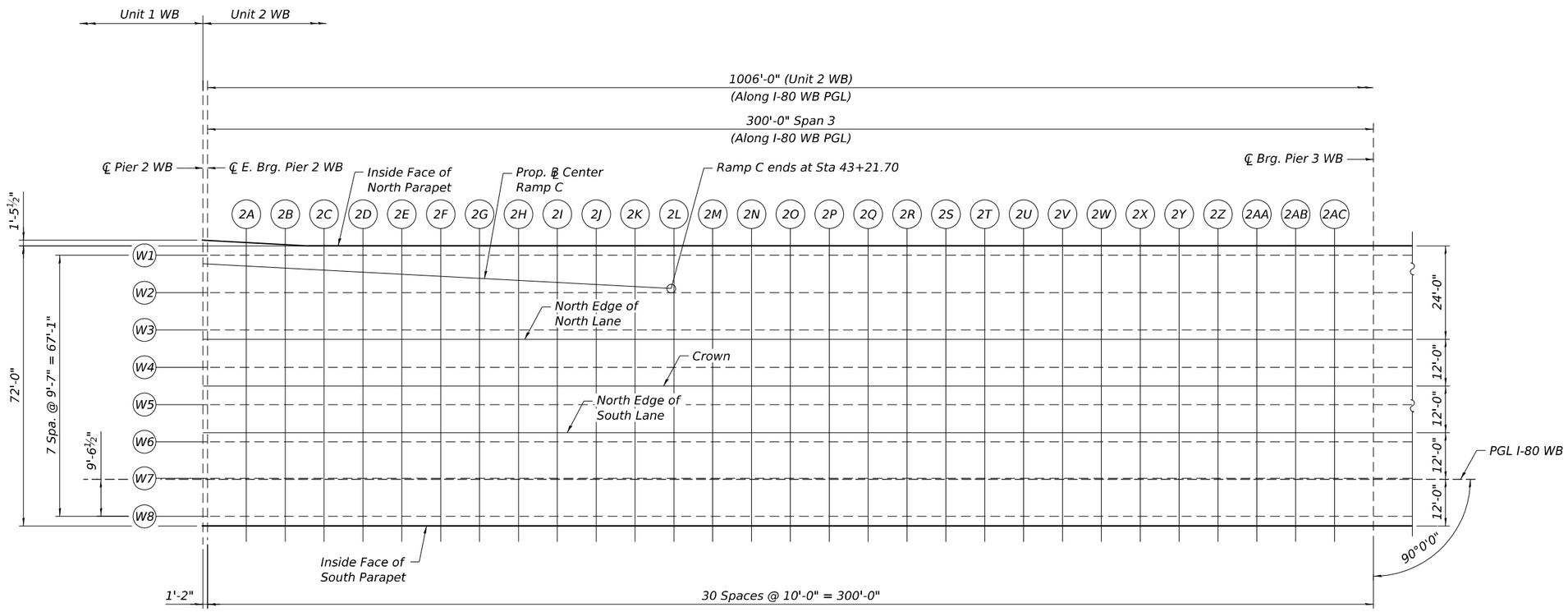


## PARTIAL PLAN - UNIT 2 WB

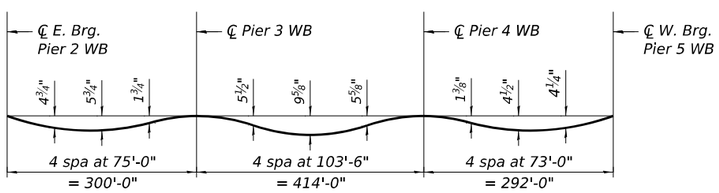


## DEAD LOAD DEFLECTION DIAGRAM

(Includes weight of concrete only.) See Note 5.

Note:
The above deflections are not to be used in the field if the engineer is working from the grade elevations adjusted for dead load deflections and grinding as shown on sheets S-22 to S-31.

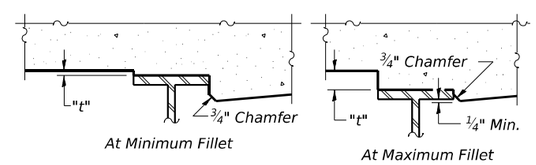


To determine "t": After all structural steel has been erected, elevations of the top flanges of the beams shall be taken at intervals shown on sheets S-22 to S-31. These elevations subtracted from the "Theoretical Grade Elevations Adjusted for Dead Load Deflection and Grinding" shown on sheets S-22 to S-31, minus the initial slab thickness prior to grinding, equals the fillet heights "t" above top flange of beams.

The slab is to be ground after curing to achieve smoothness, but the slab is not to be ground to elevations below the "Theoretical Grade Elevations" shown below. For grinding the deck, see Special Provisions.

## FILLET HEIGHTS

## NOTES:

1. The dead load deflections shown in the diagram and used for fillet height determination are based on the Deck Pouring Sequence shown on sheet S-57.
2. If the Contractor elects to use a different pour placement/hardening schedule, then the deflections and fillet heights shall be re-calculated.
3. The cost of re-calculating deflections and adjusting fillet heights shall be included in the cost of Concrete Superstructure.
4. Up to 1/4 inch to be ground off the bridge deck and the bridge approach slabs. The Profile Grade shows the final grade after grinding.
5. The dead load deflections used to compute the "Theoretical Grade Elevations Adjusted for Dead Load Deflections and Grinding" shown on sheets S-22 to S-31 include the weight of deck concrete and the parapets. The net effects of temporary formwork, assumed to be 10 PSF of deck surface area, placed on the noncomposite structure and later removed from the composite structure are included in these theoretical deflections.

# FOR INFORMATION ONLY

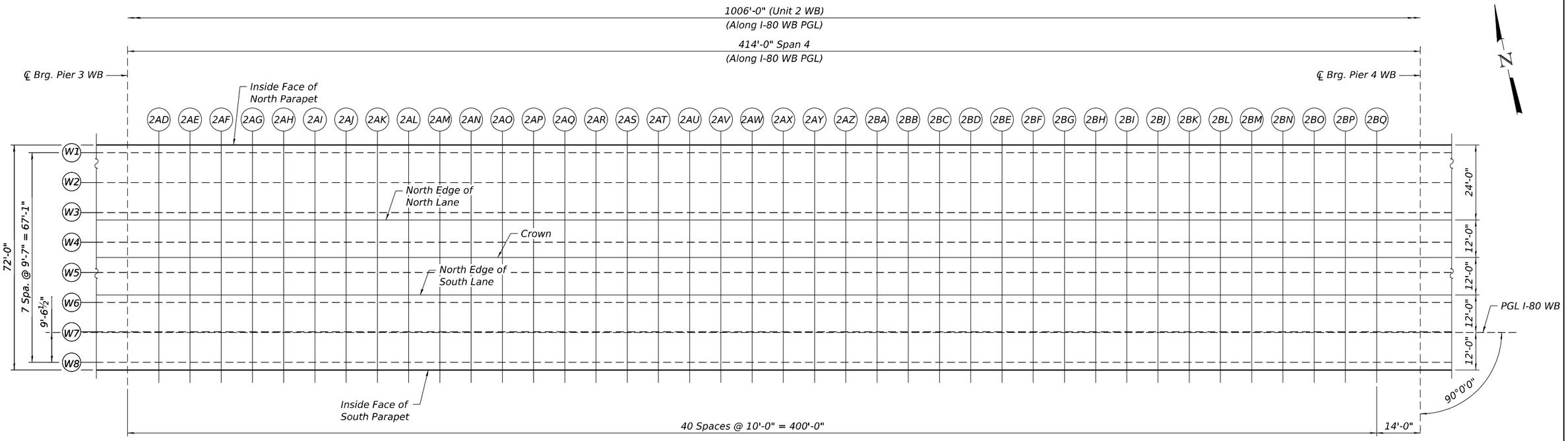


PARTIAL PLAN - UNIT 2 WB

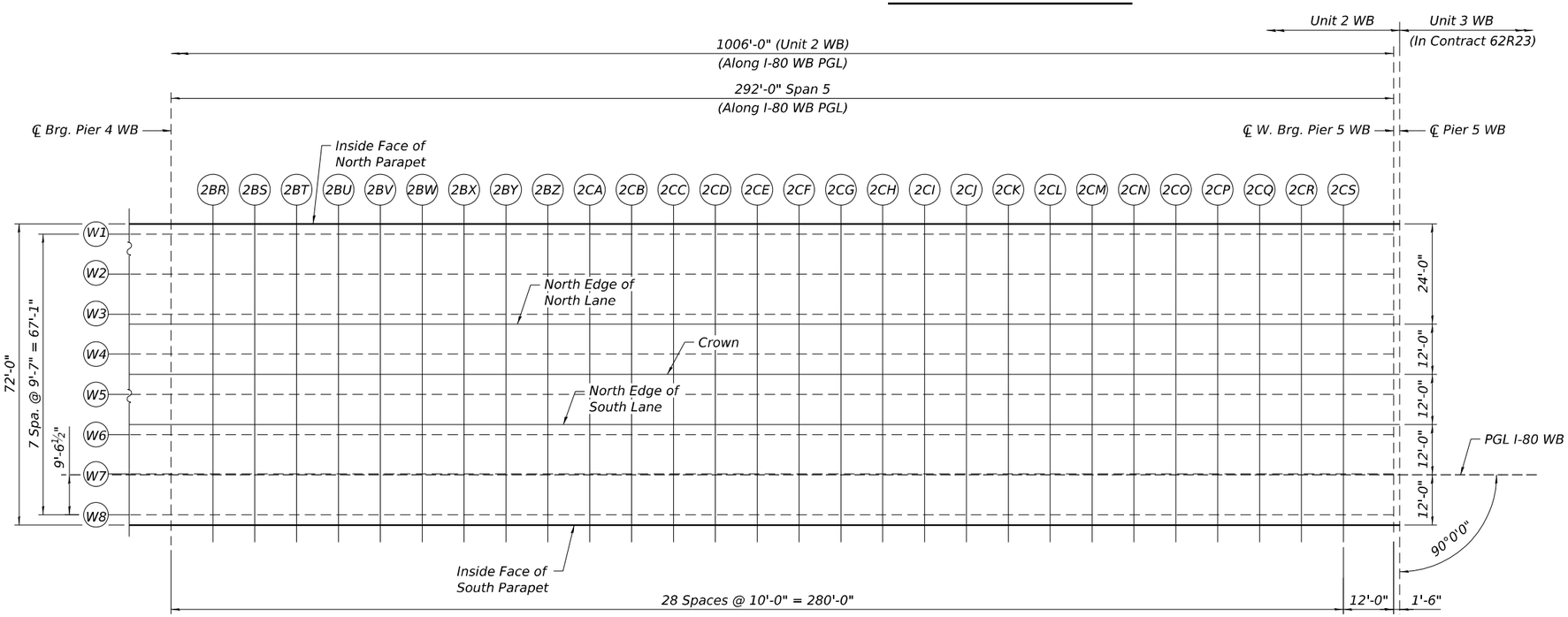


PARTIAL PLAN - UNIT 2 WB

# FOR INFORMATION ONLY

MODEL: Default
FILE NAME: pw://transystems-pw.bentley.com:transyscorp-pw1-hosted/Documents/Projects_2018/CH401/401180022/03-WSP/CAD/62W52-SF-3/Sheets/0998309-62W52-S021-DEV202.dgn


WSP USA Inc.
30 N. LASALLE STREET
SUITE 4200
CHICAGO, IL 60602
TEL: (312) 782-8150
FAX: (312) 782-1684


| | | | |
|---|---|---|---|
| USER NAME = USCP702533 | DESIGNED - LAS | REVISED - | |
| | CHECKED - TB | REVISED - | |
| PLOT SCALE = 32:0 ':' / in. | DRAWN - GM | REVISED - | |
| PLOT DATE = 10/11/2024 | CHECKED - LAS | REVISED - | |

**STATE OF ILLINOIS**
**DEPARTMENT OF TRANSPORTATION**

**TOP OF SLAB ELEVATION PLAN - UNIT 2 WB**
**STRUCTURE NUMBER 099-8309 WB AND 099-8325 EB**

SHEET S-21 OF S-87 SHEETS

| F.A.I RTE. | SECTION | COUNTY | TOTAL SHEETS | SHEET NO. |
|---|---|---|---|---|
| I-80 | (99-3DEFP) HF 23 | WILL | 89 | 23 |
| | | CONTRACT NO. 62W52 | | |
| | ILLINOIS | FED. AID PROJECT | | |

## INSIDE FACE OF NORTH PARAPET - WB

| Location | Station | Offset | Theoretical Grade Elevations | Theoretical Grade Elevations Adjusted For Dead Load Deflection and Grinding |
|---|---|---|---|---|
| ℄ PIER 2 WB | 42+01.21 | -61.44 | 602.39 | 602.41 |
| ℄ E BRG PIER 2 WB | 42+02.38 | -61.38 | 602.40 | 602.42 |
| 2A | 42+12.38 | -60.85 | 602.51 | 602.59 |
| 2B | 42+22.38 | -60.31 | 602.61 | 602.76 |
| 2C | 42+32.38 | -60.00 | 602.70 | 602.91 |
| 2D | 42+42.38 | -60.00 | 602.78 | 603.05 |
| 2E | 42+52.38 | -60.00 | 602.86 | 603.18 |
| 2F | 42+62.38 | -60.00 | 602.93 | 603.30 |
| 2G | 42+72.38 | -60.00 | 603.00 | 603.40 |
| 2H | 42+82.38 | -60.00 | 603.06 | 603.50 |
| 2I | 42+92.38 | -60.00 | 603.13 | 603.59 |
| 2J | 43+02.38 | -60.00 | 603.18 | 603.66 |
| 2K | 43+12.38 | -60.00 | 603.24 | 603.73 |
| 2L | 43+22.38 | -60.00 | 603.29 | 603.78 |
| 2M | 43+32.38 | -60.00 | 603.33 | 603.82 |
| 2N | 43+42.38 | -60.00 | 603.37 | 603.85 |
| 2O | 43+52.38 | -60.00 | 603.41 | 603.87 |
| 2P | 43+62.38 | -60.00 | 603.44 | 603.88 |
| 2Q | 43+72.38 | -60.00 | 603.47 | 603.88 |
| 2R | 43+82.38 | -60.00 | 603.50 | 603.87 |
| 2S | 43+92.38 | -60.00 | 603.52 | 603.85 |
| 2T | 44+02.38 | -60.00 | 603.54 | 603.82 |
| 2U | 44+12.38 | -60.00 | 603.55 | 603.79 |
| 2V | 44+22.38 | -60.00 | 603.56 | 603.75 |
| 2W | 44+32.38 | -60.00 | 603.56 | 603.71 |
| 2X | 44+42.38 | -60.00 | 603.57 | 603.68 |
| 2Y | 44+52.38 | -60.00 | 603.56 | 603.64 |
| 2Z | 44+62.38 | -60.00 | 603.56 | 603.61 |
| 2AA | 44+72.38 | -60.00 | 603.55 | 603.58 |
| 2AB | 44+82.38 | -60.00 | 603.53 | 603.55 |
| 2AC | 44+92.38 | -60.00 | 603.51 | 603.53 |
| ℄ BRG. PIER 3 WB | 45+02.38 | -60.00 | 603.49 | 603.51 |
| 2AD | 45+12.38 | -60.00 | 603.46 | 603.50 |
| 2AE | 45+22.38 | -60.00 | 603.43 | 603.49 |
| 2AF | 45+32.38 | -60.00 | 603.40 | 603.49 |
| 2AG | 45+42.38 | -60.00 | 603.36 | 603.49 |
| 2AH | 45+52.38 | -60.00 | 603.32 | 603.49 |
| 2AI | 45+62.38 | -60.00 | 603.27 | 603.49 |
| 2AJ | 45+72.38 | -60.00 | 603.22 | 603.50 |
| 2AK | 45+82.38 | -60.00 | 603.16 | 603.50 |
| 2AL | 45+92.38 | -60.00 | 603.11 | 603.50 |
| 2AM | 46+02.38 | -60.00 | 603.04 | 603.50 |
| 2AN | 46+12.38 | -60.00 | 602.98 | 603.49 |
| 2AO | 46+22.38 | -60.00 | 602.91 | 603.48 |
| 2AP | 46+32.38 | -60.00 | 602.83 | 603.45 |
| 2AQ | 46+42.38 | -60.00 | 602.75 | 603.42 |
| 2AR | 46+52.38 | -60.00 | 602.67 | 603.38 |
| 2AS | 46+62.38 | -60.00 | 602.58 | 603.32 |
| 2AT | 46+72.38 | -60.00 | 602.49 | 603.26 |
| 2AU | 46+82.38 | -60.00 | 602.40 | 603.19 |
| 2AV | 46+92.38 | -60.00 | 602.30 | 603.11 |
| 2AW | 47+02.38 | -60.00 | 602.20 | 603.01 |
| 2AX | 47+12.38 | -60.00 | 602.09 | 602.91 |
| 2AY | 47+22.38 | -60.00 | 601.98 | 602.79 |
| 2AZ | 47+32.38 | -60.00 | 601.86 | 602.67 |

## INSIDE FACE OF NORTH PARAPET - WB (CONT.)

| Location | Station | Offset | Theoretical Grade Elevations | Theoretical Grade Elevations Adjusted For Dead Load Deflection and Grinding |
|---|---|---|---|---|
| 2BA | 47+42.38 | -60.00 | 601.75 | 602.53 |
| 2BB | 47+52.38 | -60.00 | 601.62 | 602.38 |
| 2BC | 47+62.38 | -60.00 | 601.50 | 602.23 |
| 2BD | 47+72.38 | -60.00 | 601.37 | 602.06 |
| 2BE | 47+82.38 | -60.00 | 601.23 | 601.88 |
| 2BF | 47+92.38 | -60.00 | 601.09 | 601.69 |
| 2BG | 48+02.38 | -60.00 | 600.95 | 601.50 |
| 2BH | 48+12.38 | -60.00 | 600.80 | 601.29 |
| 2BI | 48+22.38 | -60.00 | 600.65 | 601.08 |
| 2BJ | 48+32.38 | -60.00 | 600.50 | 600.87 |
| 2BK | 48+42.38 | -60.00 | 600.34 | 600.65 |
| 2BL | 48+52.38 | -60.00 | 600.18 | 600.43 |
| 2BM | 48+62.38 | -60.00 | 600.01 | 600.21 |
| 2BN | 48+72.38 | -60.00 | 599.84 | 599.99 |
| 2BO | 48+82.38 | -60.00 | 599.66 | 599.77 |
| 2BP | 48+92.38 | -60.00 | 599.49 | 599.56 |
| 2BQ | 49+02.38 | -60.00 | 599.30 | 599.35 |
| ℄ BRG. PIER 4 WB | 49+16.38 | -60.00 | 599.04 | 599.06 |
| 2BR | 49+26.38 | -60.00 | 598.85 | 598.86 |
| 2BS | 49+36.38 | -60.00 | 598.65 | 598.67 |
| 2BT | 49+46.38 | -60.00 | 598.45 | 598.48 |
| 2BU | 49+56.38 | -60.00 | 598.25 | 598.29 |
| 2BV | 49+66.38 | -60.00 | 598.04 | 598.10 |
| 2BW | 49+76.38 | -60.00 | 597.83 | 597.92 |
| 2BX | 49+86.38 | -60.00 | 597.61 | 597.74 |
| 2BY | 49+96.38 | -60.00 | 597.39 | 597.56 |
| 2BZ | 50+06.38 | -60.00 | 597.17 | 597.37 |
| 2CA | 50+16.38 | -60.00 | 596.94 | 597.19 |
| 2CB | 50+26.38 | -60.00 | 596.71 | 596.99 |
| 2CC | 50+36.38 | -60.00 | 596.47 | 596.79 |
| 2CD | 50+46.38 | -60.00 | 596.23 | 596.59 |
| 2CE | 50+56.38 | -60.00 | 595.98 | 596.37 |
| 2CF | 50+66.38 | -60.00 | 595.74 | 596.14 |
| 2CG | 50+76.38 | -60.00 | 595.48 | 595.91 |
| 2CH | 50+86.38 | -60.00 | 595.23 | 595.66 |
| 2CI | 50+96.38 | -60.00 | 594.97 | 595.40 |
| 2CJ | 51+06.38 | -60.00 | 594.70 | 595.13 |
| 2CK | 51+16.38 | -60.00 | 594.43 | 594.85 |
| 2CL | 51+26.38 | -60.00 | 594.16 | 594.56 |
| 2CM | 51+36.38 | -60.00 | 593.89 | 594.25 |
| 2CN | 51+46.38 | -60.00 | 593.61 | 593.94 |
| 2CO | 51+56.38 | -60.00 | 593.32 | 593.62 |
| 2CP | 51+66.38 | -60.00 | 593.03 | 593.28 |
| 2CQ | 51+76.38 | -60.00 | 592.74 | 592.94 |
| 2CR | 51+86.38 | -60.00 | 592.45 | 592.59 |
| 2CS | 51+96.38 | -60.00 | 592.14 | 592.24 |
| ℄ W BRG PIER 5 WB | 52+08.38 | -60.00 | 591.78 | 591.80 |
| ℄ PIER 5 WB | 52+09.88 | -60.00 | 591.73 | 591.75 |

## GIRDER W1

| Location | Station | Offset | Theoretical Grade Elevations | Theoretical Grade Elevations Adjusted For Dead Load Deflection and Grinding |
|---|---|---|---|---|
| ℄ PIER 2 WB | 42+01.21 | -57.54 | 602.47 | 602.49 |
| ℄ E BRG PIER 2 WB | 42+02.38 | -57.54 | 602.48 | 602.50 |
| 2A | 42+12.38 | -57.54 | 602.57 | 602.66 |
| 2B | 42+22.38 | -57.54 | 602.66 | 602.81 |
| 2C | 42+32.38 | -57.54 | 602.75 | 602.96 |
| 2D | 42+42.38 | -57.54 | 602.83 | 603.10 |
| 2E | 42+52.38 | -57.54 | 602.91 | 603.22 |
| 2F | 42+62.38 | -57.54 | 602.98 | 603.34 |
| 2G | 42+72.38 | -57.54 | 603.05 | 603.45 |
| 2H | 42+82.38 | -57.54 | 603.11 | 603.55 |
| 2I | 42+92.38 | -57.54 | 603.18 | 603.64 |
| 2J | 43+02.38 | -57.54 | 603.23 | 603.71 |
| 2K | 43+12.38 | -57.54 | 603.29 | 603.78 |
| 2L | 43+22.38 | -57.54 | 603.34 | 603.83 |
| 2M | 43+32.38 | -57.54 | 603.38 | 603.87 |
| 2N | 43+42.38 | -57.54 | 603.42 | 603.90 |
| 2O | 43+52.38 | -57.54 | 603.46 | 603.92 |
| 2P | 43+62.38 | -57.54 | 603.49 | 603.93 |
| 2Q | 43+72.38 | -57.54 | 603.52 | 603.93 |
| 2R | 43+82.38 | -57.54 | 603.55 | 603.92 |
| 2S | 43+92.38 | -57.54 | 603.57 | 603.90 |
| 2T | 44+02.38 | -57.54 | 603.59 | 603.87 |
| 2U | 44+12.38 | -57.54 | 603.60 | 603.84 |
| 2V | 44+22.38 | -57.54 | 603.61 | 603.80 |
| 2W | 44+32.38 | -57.54 | 603.61 | 603.76 |
| 2X | 44+42.38 | -57.54 | 603.61 | 603.73 |
| 2Y | 44+52.38 | -57.54 | 603.61 | 603.69 |
| 2Z | 44+62.38 | -57.54 | 603.61 | 603.66 |
| 2AA | 44+72.38 | -57.54 | 603.59 | 603.63 |
| 2AB | 44+82.38 | -57.54 | 603.58 | 603.60 |
| 2AC | 44+92.38 | -57.54 | 603.56 | 603.58 |
| ℄ BRG. PIER 3 WB | 45+02.38 | -57.54 | 603.54 | 603.56 |
| 2AD | 45+12.38 | -57.54 | 603.51 | 603.55 |
| 2AE | 45+22.38 | -57.54 | 603.48 | 603.54 |
| 2AF | 45+32.38 | -57.54 | 603.45 | 603.54 |
| 2AG | 45+42.38 | -57.54 | 603.41 | 603.53 |
| 2AH | 45+52.38 | -57.54 | 603.37 | 603.54 |
| 2AI | 45+62.38 | -57.54 | 603.32 | 603.54 |
| 2AJ | 45+72.38 | -57.54 | 603.27 | 603.55 |
| 2AK | 45+82.38 | -57.54 | 603.21 | 603.55 |
| 2AL | 45+92.38 | -57.54 | 603.15 | 603.55 |
| 2AM | 46+02.38 | -57.54 | 603.09 | 603.55 |
| 2AN | 46+12.38 | -57.54 | 603.03 | 603.54 |
| 2AO | 46+22.38 | -57.54 | 602.95 | 603.53 |
| 2AP | 46+32.38 | -57.54 | 602.88 | 603.50 |
| 2AQ | 46+42.38 | -57.54 | 602.80 | 603.47 |
| 2AR | 46+52.38 | -57.54 | 602.72 | 603.43 |
| 2AS | 46+62.38 | -57.54 | 602.63 | 603.37 |
| 2AT | 46+72.38 | -57.54 | 602.54 | 603.31 |
| 2AU | 46+82.38 | -57.54 | 602.45 | 603.24 |
| 2AV | 46+92.38 | -57.54 | 602.35 | 603.16 |
| 2AW | 47+02.38 | -57.54 | 602.25 | 603.06 |
| 2AX | 47+12.38 | -57.54 | 602.14 | 602.96 |
| 2AY | 47+22.38 | -57.54 | 602.03 | 602.84 |
| 2AZ | 47+32.38 | -57.54 | 601.91 | 602.72 |

### NOTES:

1. All Elevations and Offsets are in feet.
2. Offsets are measured with respect to the I-80 WB PGL. Negative offsets are left and positive are right of the PGL.

# FOR INFORMATION ONLY

WSP USA Inc.
30 N. LASALLE STREET
SUITE 4200
CHICAGO, IL 60602
TEL: (312) 782-8150
FAX: (312) 782-1684

| | | | |
|---|---|---|---|
| USER NAME = USCP702533 | DESIGNED - LAS | REVISED - | |
| | CHECKED - TB | REVISED - | |
| PLOT SCALE = 100.000 ' / in. | DRAWN - GM | REVISED - | |
| PLOT DATE = 10/11/2024 | CHECKED - LAS | REVISED - | |

**STATE OF ILLINOIS**
**DEPARTMENT OF TRANSPORTATION**

**TOP OF SLAB ELEVATIONS - UNIT 2 WB**
**STRUCTURE NUMBER 099-8309 WB AND 099-8325 EB**

SHEET S-22 OF S-87 SHEETS

| F.A.I RTE. | SECTION | COUNTY | TOTAL SHEETS | SHEET NO. |
|---|---|---|---|---|
| I-80 | (99-3DEFP) HF 23 | WILL | 89 | 24 |
| | | CONTRACT NO. 62W52 | | |
| | ILLINOIS | FED. AID PROJECT | | |

MODEL: Default
FILE NAME: pw://transystems-pw.bentley.com:transyscorp-pw1-hosted\Documents\Projects_2018\CH401\4011800\22\03-WSP\CAD\62W52-SF-3\Sheets\0998309-E2W52-S022-DEW203.dgn

## GIRDER W1 (CONT.)

| Location | Station | Offset | Theoretical Grade Elevations | Theoretical Grade Elevations Adjusted For Dead Load Deflection and Grinding |
|---|---|---|---|---|
| 2BA | 47+42.38 | -57.54 | 601.79 | 602.58 |
| 2BB | 47+52.38 | -57.54 | 601.67 | 602.43 |
| 2BC | 47+62.38 | -57.54 | 601.55 | 602.27 |
| 2BD | 47+72.38 | -57.54 | 601.41 | 602.11 |
| 2BE | 47+82.38 | -57.54 | 601.28 | 601.93 |
| 2BF | 47+92.38 | -57.54 | 601.14 | 601.74 |
| 2BG | 48+02.38 | -57.54 | 601.00 | 601.55 |
| 2BH | 48+12.38 | -57.54 | 600.85 | 601.34 |
| 2BI | 48+22.38 | -57.54 | 600.70 | 601.13 |
| 2BJ | 48+32.38 | -57.54 | 600.55 | 600.92 |
| 2BK | 48+42.38 | -57.54 | 600.39 | 600.70 |
| 2BL | 48+52.38 | -57.54 | 600.23 | 600.48 |
| 2BM | 48+62.38 | -57.54 | 600.06 | 600.26 |
| 2BN | 48+72.38 | -57.54 | 599.89 | 600.04 |
| 2BO | 48+82.38 | -57.54 | 599.71 | 599.82 |
| 2BP | 48+92.38 | -57.54 | 599.53 | 599.61 |
| 2BQ | 49+02.38 | -57.54 | 599.35 | 599.40 |
| ℄ BRG. PIER 4 WB | 49+16.38 | -57.54 | 599.09 | 599.11 |
| 2BR | 49+26.38 | -57.54 | 598.90 | 598.91 |
| 2BS | 49+36.38 | -57.54 | 598.70 | 598.72 |
| 2BT | 49+46.38 | -57.54 | 598.50 | 598.52 |
| 2BU | 49+56.38 | -57.54 | 598.30 | 598.34 |
| 2BV | 49+66.38 | -57.54 | 598.09 | 598.15 |
| 2BW | 49+76.38 | -57.54 | 597.88 | 597.97 |
| 2BX | 49+86.38 | -57.54 | 597.66 | 597.79 |
| 2BY | 49+96.38 | -57.54 | 597.44 | 597.61 |
| 2BZ | 50+06.38 | -57.54 | 597.21 | 597.42 |
| 2CA | 50+16.38 | -57.54 | 596.99 | 597.24 |
| 2CB | 50+26.38 | -57.54 | 596.75 | 597.04 |
| 2CC | 50+36.38 | -57.54 | 596.52 | 596.84 |
| 2CD | 50+46.38 | -57.54 | 596.28 | 596.64 |
| 2CE | 50+56.38 | -57.54 | 596.03 | 596.42 |
| 2CF | 50+66.38 | -57.54 | 595.79 | 596.19 |
| 2CG | 50+76.38 | -57.54 | 595.53 | 595.95 |
| 2CH | 50+86.38 | -57.54 | 595.28 | 595.71 |
| 2CI | 50+96.38 | -57.54 | 595.02 | 595.45 |
| 2CJ | 51+06.38 | -57.54 | 594.75 | 595.18 |
| 2CK | 51+16.38 | -57.54 | 594.48 | 594.90 |
| 2CL | 51+26.38 | -57.54 | 594.21 | 594.61 |
| 2CM | 51+36.38 | -57.54 | 593.94 | 594.30 |
| 2CN | 51+46.38 | -57.54 | 593.66 | 593.99 |
| 2CO | 51+56.38 | -57.54 | 593.37 | 593.67 |
| 2CP | 51+66.38 | -57.54 | 593.08 | 593.33 |
| 2CQ | 51+76.38 | -57.54 | 592.79 | 592.99 |
| 2CR | 51+86.38 | -57.54 | 592.49 | 592.64 |
| 2CS | 51+96.38 | -57.54 | 592.19 | 592.29 |
| ℄ W BRG PIER 5 WB | 52+08.38 | -57.54 | 591.83 | 591.85 |
| ℄ PIER 5 WB | 52+09.88 | -57.54 | 591.78 | 591.80 |

## PROP. ℄ CENTER RAMP C

| Location | Station | Offset | Theoretical Grade Elevations | Theoretical Grade Elevations Adjusted For Dead Load Deflection and Grinding |
|---|---|---|---|---|
| ℄ PIER 2 WB | 42+01.21 | -55.44 | 602.51 | 602.53 |
| ℄ E BRG PIER 2 WB | 42+02.38 | -55.37 | 602.52 | 602.54 |
| 2A | 42+12.37 | -54.84 | 602.63 | 602.71 |
| 2B | 42+22.35 | -54.31 | 602.73 | 602.88 |
| 2C | 42+32.34 | -53.77 | 602.82 | 603.03 |
| 2D | 42+42.32 | -53.24 | 602.91 | 603.18 |
| 2E | 42+52.31 | -52.71 | 603.00 | 603.32 |
| 2F | 42+62.29 | -52.17 | 603.09 | 603.45 |
| 2G | 42+72.28 | -51.64 | 603.17 | 603.57 |
| 2H | 42+82.27 | -51.11 | 603.24 | 603.68 |
| 2I | 42+92.25 | -50.57 | 603.31 | 603.78 |
| 2J | 43+02.24 | -50.04 | 603.38 | 603.86 |
| 2K | 43+12.22 | -49.51 | 603.45 | 603.94 |
| 2L | - | - | - | - |
| 2M | - | - | - | - |
| 2N | - | - | - | - |
| 2O | - | - | - | - |
| 2P | - | - | - | - |
| 2Q | - | - | - | - |
| 2R | - | - | - | - |
| 2S | - | - | - | - |
| 2T | - | - | - | - |
| 2U | - | - | - | - |
| 2V | - | - | - | - |
| 2W | - | - | - | - |
| 2X | - | - | - | - |
| 2Y | - | - | - | - |
| 2Z | - | - | - | - |
| 2AA | - | - | - | - |
| 2AB | - | - | - | - |
| 2AC | - | - | - | - |
| ℄ BRG. PIER 3 WB | - | - | - | - |
| 2AD | - | - | - | - |
| 2AE | - | - | - | - |
| 2AF | - | - | - | - |
| 2AG | - | - | - | - |
| 2AH | - | - | - | - |
| 2AI | - | - | - | - |
| 2AJ | - | - | - | - |
| 2AK | - | - | - | - |
| 2AL | - | - | - | - |
| 2AM | - | - | - | - |
| 2AN | - | - | - | - |
| 2AO | - | - | - | - |
| 2AP | - | - | - | - |
| 2AQ | - | - | - | - |
| 2AR | - | - | - | - |
| 2AS | - | - | - | - |
| 2AT | - | - | - | - |
| 2AU | - | - | - | - |
| 2AV | - | - | - | - |
| 2AW | - | - | - | - |
| 2AX | - | - | - | - |
| 2AY | - | - | - | - |
| 2AZ | - | - | - | - |

## PROP. ℄ CENTER RAMP C (CONT.)

| Location | Station | Offset | Theoretical Grade Elevations | Theoretical Grade Elevations Adjusted For Dead Load Deflection and Grinding |
|---|---|---|---|---|
| 2BA | - | - | - | - |
| 2BB | - | - | - | - |
| 2BC | - | - | - | - |
| 2BD | - | - | - | - |
| 2BE | - | - | - | - |
| 2BF | - | - | - | - |
| 2BG | - | - | - | - |
| 2BH | - | - | - | - |
| 2BI | - | - | - | - |
| 2BJ | - | - | - | - |
| 2BK | - | - | - | - |
| 2BL | - | - | - | - |
| 2BM | - | - | - | - |
| 2BN | - | - | - | - |
| 2BO | - | - | - | - |
| 2BP | - | - | - | - |
| 2BQ | - | - | - | - |
| ℄ BRG. PIER 4 WB | - | - | - | - |
| 2BR | - | - | - | - |
| 2BS | - | - | - | - |
| 2BT | - | - | - | - |
| 2BU | - | - | - | - |
| 2BV | - | - | - | - |
| 2BW | - | - | - | - |
| 2BX | - | - | - | - |
| 2BY | - | - | - | - |
| 2BZ | - | - | - | - |
| 2CA | - | - | - | - |
| 2CB | - | - | - | - |
| 2CC | - | - | - | - |
| 2CD | - | - | - | - |
| 2CE | - | - | - | - |
| 2CF | - | - | - | - |
| 2CG | - | - | - | - |
| 2CH | - | - | - | - |
| 2CI | - | - | - | - |
| 2CJ | - | - | - | - |
| 2CK | - | - | - | - |
| 2CL | - | - | - | - |
| 2CM | - | - | - | - |
| 2CN | - | - | - | - |
| 2CO | - | - | - | - |
| 2CP | - | - | - | - |
| 2CQ | - | - | - | - |
| 2CR | - | - | - | - |
| 2CS | - | - | - | - |
| ℄ W BRG PIER 5 WB | - | - | - | - |
| ℄ PIER 5 WB | - | - | - | - |

### NOTES:

1. All Elevations and Offsets are in feet.
2. Offsets are measured with respect to the I-80 WB PGL. Negative offsets are left and positive are right of the PGL.

# FOR INFORMATION ONLY

WSP USA Inc.
30 N. LASALLE STREET
SUITE 4200
CHICAGO, IL 60602
TEL: (312) 782-8150
FAX: (312) 782-1684

| | | | |
|---|---|---|---|
| USER NAME = USCP702533 | DESIGNED - LAS | REVISED - | |
| | CHECKED - TB | REVISED - | |
| PLOT SCALE = 100.000 ' / in. | DRAWN - GM | REVISED - | |
| PLOT DATE = 10/11/2024 | CHECKED - LAS | REVISED - | |

**STATE OF ILLINOIS**
**DEPARTMENT OF TRANSPORTATION**

**TOP OF SLAB ELEVATIONS - UNIT 2 WB**
**STRUCTURE NUMBER 099-8309 WB AND 099-8325 EB**

SHEET S-23 OF S-87 SHEETS

| F.A.I RTE. | SECTION | COUNTY | TOTAL SHEETS | SHEET NO. |
|---|---|---|---|---|
| I-80 | (99-3DEFP) HF 23 | WILL | 89 | 25 |
| | | CONTRACT NO. 62W52 | | |
| | ILLINOIS | FED. AID PROJECT | | |

MODEL: Default
FILE NAME: pw://transystems-pw.bentley.com:transyscorp-pw1-hosted/Documents/Projects_2018/CH401/401180022/03-WSP/CAD/62W52-SF-3/Sheets/0998309-82W52-S023-DEW204.dgn

## GIRDER W2

| Location | Station | Offset | Theoretical Grade Elevations | Theoretical Grade Elevations Adjusted For Dead Load Deflection and Grinding |
|---|---|---|---|---|
| ℄ PIER 2 WB | 42+01.21 | -47.96 | 602.66 | 602.68 |
| ℄ E BRG PIER 2 WB | 42+02.38 | -47.96 | 602.67 | 602.69 |
| 2A | 42+12.38 | -47.96 | 602.76 | 602.85 |
| 2B | 42+22.38 | -47.96 | 602.85 | 603.00 |
| 2C | 42+32.38 | -47.96 | 602.94 | 603.15 |
| 2D | 42+42.38 | -47.96 | 603.02 | 603.29 |
| 2E | 42+52.38 | -47.96 | 603.10 | 603.42 |
| 2F | 42+62.38 | -47.96 | 603.17 | 603.54 |
| 2G | 42+72.38 | -47.96 | 603.24 | 603.65 |
| 2H | 42+82.38 | -47.96 | 603.31 | 603.74 |
| 2I | 42+92.38 | -47.96 | 603.37 | 603.83 |
| 2J | 43+02.38 | -47.96 | 603.42 | 603.91 |
| 2K | 43+12.38 | -47.96 | 603.48 | 603.97 |
| 2L | 43+22.38 | -47.96 | 603.53 | 604.02 |
| 2M | 43+32.38 | -47.96 | 603.57 | 604.06 |
| 2N | 43+42.38 | -47.96 | 603.61 | 604.09 |
| 2O | 43+52.38 | -47.96 | 603.65 | 604.11 |
| 2P | 43+62.38 | -47.96 | 603.68 | 604.12 |
| 2Q | 43+72.38 | -47.96 | 603.71 | 604.12 |
| 2R | 43+82.38 | -47.96 | 603.74 | 604.11 |
| 2S | 43+92.38 | -47.96 | 603.76 | 604.09 |
| 2T | 44+02.38 | -47.96 | 603.78 | 604.06 |
| 2U | 44+12.38 | -47.96 | 603.79 | 604.03 |
| 2V | 44+22.38 | -47.96 | 603.80 | 603.99 |
| 2W | 44+32.38 | -47.96 | 603.81 | 603.96 |
| 2X | 44+42.38 | -47.96 | 603.81 | 603.92 |
| 2Y | 44+52.38 | -47.96 | 603.80 | 603.88 |
| 2Z | 44+62.38 | -47.96 | 603.80 | 603.85 |
| 2AA | 44+72.38 | -47.96 | 603.79 | 603.82 |
| 2AB | 44+82.38 | -47.96 | 603.77 | 603.79 |
| 2AC | 44+92.38 | -47.96 | 603.75 | 603.77 |
| ℄ BRG. PIER 3 WB | 45+02.38 | -47.96 | 603.73 | 603.75 |
| 2AD | 45+12.38 | -47.96 | 603.70 | 603.74 |
| 2AE | 45+22.38 | -47.96 | 603.67 | 603.73 |
| 2AF | 45+32.38 | -47.96 | 603.64 | 603.73 |
| 2AG | 45+42.38 | -47.96 | 603.60 | 603.73 |
| 2AH | 45+52.38 | -47.96 | 603.56 | 603.73 |
| 2AI | 45+62.38 | -47.96 | 603.51 | 603.73 |
| 2AJ | 45+72.38 | -47.96 | 603.46 | 603.74 |
| 2AK | 45+82.38 | -47.96 | 603.40 | 603.74 |
| 2AL | 45+92.38 | -47.96 | 603.35 | 603.74 |
| 2AM | 46+02.38 | -47.96 | 603.28 | 603.74 |
| 2AN | 46+12.38 | -47.96 | 603.22 | 603.73 |
| 2AO | 46+22.38 | -47.96 | 603.15 | 603.72 |
| 2AP | 46+32.38 | -47.96 | 603.07 | 603.69 |
| 2AQ | 46+42.38 | -47.96 | 602.99 | 603.66 |
| 2AR | 46+52.38 | -47.96 | 602.91 | 603.62 |
| 2AS | 46+62.38 | -47.96 | 602.82 | 603.57 |
| 2AT | 46+72.38 | -47.96 | 602.73 | 603.50 |
| 2AU | 46+82.38 | -47.96 | 602.64 | 603.43 |
| 2AV | 46+92.38 | -47.96 | 602.54 | 603.35 |
| 2AW | 47+02.38 | -47.96 | 602.44 | 603.25 |
| 2AX | 47+12.38 | -47.96 | 602.33 | 603.15 |
| 2AY | 47+22.38 | -47.96 | 602.22 | 603.04 |
| 2AZ | 47+32.38 | -47.96 | 602.10 | 602.91 |

## GIRDER W2 (CONT.)

| Location | Station | Offset | Theoretical Grade Elevations | Theoretical Grade Elevations Adjusted For Dead Load Deflection and Grinding |
|---|---|---|---|---|
| 2BA | 47+42.38 | -47.96 | 601.99 | 602.77 |
| 2BB | 47+52.38 | -47.96 | 601.86 | 602.62 |
| 2BC | 47+62.38 | -47.96 | 601.74 | 602.47 |
| 2BD | 47+72.38 | -47.96 | 601.61 | 602.30 |
| 2BE | 47+82.38 | -47.96 | 601.47 | 602.12 |
| 2BF | 47+92.38 | -47.96 | 601.33 | 601.93 |
| 2BG | 48+02.38 | -47.96 | 601.19 | 601.74 |
| 2BH | 48+12.38 | -47.96 | 601.04 | 601.54 |
| 2BI | 48+22.38 | -47.96 | 600.89 | 601.33 |
| 2BJ | 48+32.38 | -47.96 | 600.74 | 601.11 |
| 2BK | 48+42.38 | -47.96 | 600.58 | 600.89 |
| 2BL | 48+52.38 | -47.96 | 600.42 | 600.67 |
| 2BM | 48+62.38 | -47.96 | 600.25 | 600.45 |
| 2BN | 48+72.38 | -47.96 | 600.08 | 600.23 |
| 2BO | 48+82.38 | -47.96 | 599.90 | 600.02 |
| 2BP | 48+92.38 | -47.96 | 599.73 | 599.80 |
| 2BQ | 49+02.38 | -47.96 | 599.54 | 599.59 |
| ℄ BRG. PIER 4 WB | 49+16.38 | -47.96 | 599.28 | 599.30 |
| 2BR | 49+26.38 | -47.96 | 599.09 | 599.10 |
| 2BS | 49+36.38 | -47.96 | 598.89 | 598.91 |
| 2BT | 49+46.38 | -47.96 | 598.69 | 598.72 |
| 2BU | 49+56.38 | -47.96 | 598.49 | 598.53 |
| 2BV | 49+66.38 | -47.96 | 598.28 | 598.34 |
| 2BW | 49+76.38 | -47.96 | 598.07 | 598.16 |
| 2BX | 49+86.38 | -47.96 | 597.85 | 597.98 |
| 2BY | 49+96.38 | -47.96 | 597.63 | 597.80 |
| 2BZ | 50+06.38 | -47.96 | 597.41 | 597.61 |
| 2CA | 50+16.38 | -47.96 | 597.18 | 597.43 |
| 2CB | 50+26.38 | -47.96 | 596.95 | 597.23 |
| 2CC | 50+36.38 | -47.96 | 596.71 | 597.04 |
| 2CD | 50+46.38 | -47.96 | 596.47 | 596.83 |
| 2CE | 50+56.38 | -47.96 | 596.23 | 596.61 |
| 2CF | 50+66.38 | -47.96 | 595.98 | 596.38 |
| 2CG | 50+76.38 | -47.96 | 595.72 | 596.15 |
| 2CH | 50+86.38 | -47.96 | 595.47 | 595.90 |
| 2CI | 50+96.38 | -47.96 | 595.21 | 595.64 |
| 2CJ | 51+06.38 | -47.96 | 594.94 | 595.37 |
| 2CK | 51+16.38 | -47.96 | 594.68 | 595.09 |
| 2CL | 51+26.38 | -47.96 | 594.40 | 594.80 |
| 2CM | 51+36.38 | -47.96 | 594.13 | 594.49 |
| 2CN | 51+46.38 | -47.96 | 593.85 | 594.18 |
| 2CO | 51+56.38 | -47.96 | 593.56 | 593.86 |
| 2CP | 51+66.38 | -47.96 | 593.27 | 593.53 |
| 2CQ | 51+76.38 | -47.96 | 592.98 | 593.18 |
| 2CR | 51+86.38 | -47.96 | 592.69 | 592.83 |
| 2CS | 51+96.38 | -47.96 | 592.39 | 592.48 |
| ℄ W BRG PIER 5 WB | 52+08.38 | -47.96 | 592.02 | 592.04 |
| ℄ PIER 5 WB | 52+09.88 | -47.96 | 591.97 | 591.99 |

## GIRDER W3

| Location | Station | Offset | Theoretical Grade Elevations | Theoretical Grade Elevations Adjusted For Dead Load Deflection and Grinding |
|---|---|---|---|---|
| ℄ PIER 2 WB | 42+01.21 | -38.38 | 602.85 | 602.87 |
| ℄ E BRG PIER 2 WB | 42+02.38 | -38.38 | 602.86 | 602.88 |
| 2A | 42+12.38 | -38.38 | 602.96 | 603.04 |
| 2B | 42+22.38 | -38.38 | 603.05 | 603.19 |
| 2C | 42+32.38 | -38.38 | 603.13 | 603.34 |
| 2D | 42+42.38 | -38.38 | 603.21 | 603.48 |
| 2E | 42+52.38 | -38.38 | 603.29 | 603.61 |
| 2F | 42+62.38 | -38.38 | 603.36 | 603.73 |
| 2G | 42+72.38 | -38.38 | 603.43 | 603.84 |
| 2H | 42+82.38 | -38.38 | 603.50 | 603.93 |
| 2I | 42+92.38 | -38.38 | 603.56 | 604.02 |
| 2J | 43+02.38 | -38.38 | 603.62 | 604.10 |
| 2K | 43+12.38 | -38.38 | 603.67 | 604.16 |
| 2L | 43+22.38 | -38.38 | 603.72 | 604.22 |
| 2M | 43+32.38 | -38.38 | 603.76 | 604.26 |
| 2N | 43+42.38 | -38.38 | 603.81 | 604.29 |
| 2O | 43+52.38 | -38.38 | 603.84 | 604.30 |
| 2P | 43+62.38 | -38.38 | 603.88 | 604.31 |
| 2Q | 43+72.38 | -38.38 | 603.90 | 604.31 |
| 2R | 43+82.38 | -38.38 | 603.93 | 604.30 |
| 2S | 43+92.38 | -38.38 | 603.95 | 604.28 |
| 2T | 44+02.38 | -38.38 | 603.97 | 604.25 |
| 2U | 44+12.38 | -38.38 | 603.98 | 604.22 |
| 2V | 44+22.38 | -38.38 | 603.99 | 604.19 |
| 2W | 44+32.38 | -38.38 | 604.00 | 604.15 |
| 2X | 44+42.38 | -38.38 | 604.00 | 604.11 |
| 2Y | 44+52.38 | -38.38 | 604.00 | 604.07 |
| 2Z | 44+62.38 | -38.38 | 603.99 | 604.04 |
| 2AA | 44+72.38 | -38.38 | 603.98 | 604.01 |
| 2AB | 44+82.38 | -38.38 | 603.96 | 603.99 |
| 2AC | 44+92.38 | -38.38 | 603.94 | 603.96 |
| ℄ BRG. PIER 3 WB | 45+02.38 | -38.38 | 603.92 | 603.94 |
| 2AD | 45+12.38 | -38.38 | 603.90 | 603.93 |
| 2AE | 45+22.38 | -38.38 | 603.86 | 603.92 |
| 2AF | 45+32.38 | -38.38 | 603.83 | 603.92 |
| 2AG | 45+42.38 | -38.38 | 603.79 | 603.92 |
| 2AH | 45+52.38 | -38.38 | 603.75 | 603.92 |
| 2AI | 45+62.38 | -38.38 | 603.70 | 603.92 |
| 2AJ | 45+72.38 | -38.38 | 603.65 | 603.93 |
| 2AK | 45+82.38 | -38.38 | 603.60 | 603.93 |
| 2AL | 45+92.38 | -38.38 | 603.54 | 603.93 |
| 2AM | 46+02.38 | -38.38 | 603.48 | 603.93 |
| 2AN | 46+12.38 | -38.38 | 603.41 | 603.92 |
| 2AO | 46+22.38 | -38.38 | 603.34 | 603.91 |
| 2AP | 46+32.38 | -38.38 | 603.26 | 603.88 |
| 2AQ | 46+42.38 | -38.38 | 603.18 | 603.85 |
| 2AR | 46+52.38 | -38.38 | 603.10 | 603.81 |
| 2AS | 46+62.38 | -38.38 | 603.02 | 603.76 |
| 2AT | 46+72.38 | -38.38 | 602.92 | 603.70 |
| 2AU | 46+82.38 | -38.38 | 602.83 | 603.62 |
| 2AV | 46+92.38 | -38.38 | 602.73 | 603.54 |
| 2AW | 47+02.38 | -38.38 | 602.63 | 603.45 |
| 2AX | 47+12.38 | -38.38 | 602.52 | 603.34 |
| 2AY | 47+22.38 | -38.38 | 602.41 | 603.23 |
| 2AZ | 47+32.38 | -38.38 | 602.30 | 603.10 |

### NOTES:

1. All Elevations and Offsets are in feet.
2. Offsets are measured with respect to the I-80 WB PGL. Negative offsets are left and positive are right of the PGL.

# FOR INFORMATION ONLY

WSP USA Inc.
30 N. LASALLE STREET
SUITE 4200
CHICAGO, IL 60602
TEL: (312) 782-8150
FAX: (312) 782-1684

| | | | |
|---|---|---|---|
| USER NAME = USSJ696614 | DESIGNED - LAS | REVISED - | |
| | CHECKED - TB | REVISED - | |
| PLOT SCALE = 100.000 ' / in. | DRAWN - GM | REVISED - | |
| PLOT DATE = 12/4/2024 | CHECKED - LAS | REVISED - | |

**STATE OF ILLINOIS**
**DEPARTMENT OF TRANSPORTATION**

**TOP OF SLAB ELEVATIONS - UNIT 2 WB**
**STRUCTURE NUMBER 099-8309 WB AND 099-8325 EB**

SHEET S-24 OF S-87 SHEETS

| F.A.I RTE. | SECTION | COUNTY | TOTAL SHEETS | SHEET NO. |
|---|---|---|---|---|
| I-80 | (99-3DEFP) HF 23 | WILL | 89 | 26 |
| | | CONTRACT NO. 62W52 | | |
| | ILLINOIS | FED. AID PROJECT | | |

MODEL: Default
FILE NAME: pw://transystems-pw.bentley.com:transyscorp-pw1-hosted/Documents/Projects_2018/CH401/401180022/03-WSP/CAD/62W52-SF-3/Sheets/0998309-62W52-S024-DEW205.dgn

## GIRDER W3 (CONT.)

| Location | Station | Offset | Theoretical Grade Elevations | Theoretical Grade Elevations Adjusted For Dead Load Deflection and Grinding |
|---|---|---|---|---|
| 2BA | 47+42.38 | -38.38 | 602.18 | 602.96 |
| 2BB | 47+52.38 | -38.38 | 602.06 | 602.81 |
| 2BC | 47+62.38 | -38.38 | 601.93 | 602.66 |
| 2BD | 47+72.38 | -38.38 | 601.80 | 602.49 |
| 2BE | 47+82.38 | -38.38 | 601.66 | 602.31 |
| 2BF | 47+92.38 | -38.38 | 601.52 | 602.13 |
| 2BG | 48+02.38 | -38.38 | 601.38 | 601.93 |
| 2BH | 48+12.38 | -38.38 | 601.24 | 601.73 |
| 2BI | 48+22.38 | -38.38 | 601.08 | 601.52 |
| 2BJ | 48+32.38 | -38.38 | 600.93 | 601.30 |
| 2BK | 48+42.38 | -38.38 | 600.77 | 601.08 |
| 2BL | 48+52.38 | -38.38 | 600.61 | 600.86 |
| 2BM | 48+62.38 | -38.38 | 600.44 | 600.64 |
| 2BN | 48+72.38 | -38.38 | 600.27 | 600.42 |
| 2BO | 48+82.38 | -38.38 | 600.10 | 600.21 |
| 2BP | 48+92.38 | -38.38 | 599.92 | 599.99 |
| 2BQ | 49+02.38 | -38.38 | 599.74 | 599.78 |
| ℄ BRG. PIER 4 WB | 49+16.38 | -38.38 | 599.47 | 599.49 |
| 2BR | 49+26.38 | -38.38 | 599.28 | 599.30 |
| 2BS | 49+36.38 | -38.38 | 599.08 | 599.10 |
| 2BT | 49+46.38 | -38.38 | 598.88 | 598.91 |
| 2BU | 49+56.38 | -38.38 | 598.68 | 598.72 |
| 2BV | 49+66.38 | -38.38 | 598.47 | 598.53 |
| 2BW | 49+76.38 | -38.38 | 598.26 | 598.35 |
| 2BX | 49+86.38 | -38.38 | 598.04 | 598.17 |
| 2BY | 49+96.38 | -38.38 | 597.82 | 597.99 |
| 2BZ | 50+06.38 | -38.38 | 597.60 | 597.81 |
| 2CA | 50+16.38 | -38.38 | 597.37 | 597.62 |
| 2CB | 50+26.38 | -38.38 | 597.14 | 597.43 |
| 2CC | 50+36.38 | -38.38 | 596.90 | 597.23 |
| 2CD | 50+46.38 | -38.38 | 596.66 | 597.02 |
| 2CE | 50+56.38 | -38.38 | 596.42 | 596.80 |
| 2CF | 50+66.38 | -38.38 | 596.17 | 596.58 |
| 2CG | 50+76.38 | -38.38 | 595.92 | 596.34 |
| 2CH | 50+86.38 | -38.38 | 595.66 | 596.09 |
| 2CI | 50+96.38 | -38.38 | 595.40 | 595.83 |
| 2CJ | 51+06.38 | -38.38 | 595.14 | 595.56 |
| 2CK | 51+16.38 | -38.38 | 594.87 | 595.28 |
| 2CL | 51+26.38 | -38.38 | 594.60 | 594.99 |
| 2CM | 51+36.38 | -38.38 | 594.32 | 594.69 |
| 2CN | 51+46.38 | -38.38 | 594.04 | 594.37 |
| 2CO | 51+56.38 | -38.38 | 593.75 | 594.05 |
| 2CP | 51+66.38 | -38.38 | 593.47 | 593.72 |
| 2CQ | 51+76.38 | -38.38 | 593.17 | 593.37 |
| 2CR | 51+86.38 | -38.38 | 592.88 | 593.02 |
| 2CS | 51+96.38 | -38.38 | 592.58 | 592.67 |
| ℄ W BRG PIER 5 WB | 52+08.38 | -38.38 | 592.21 | 592.23 |
| ℄ PIER 5 WB | 52+09.88 | -38.38 | 592.17 | 592.19 |

## NORTH EDGE OF NORTH LANE - WB

| Location | Station | Offset | Theoretical Grade Elevations | Theoretical Grade Elevations Adjusted For Dead Load Deflection and Grinding |
|---|---|---|---|---|
| ℄ PIER 2 WB | 42+01.21 | -36.00 | 602.90 | 602.92 |
| ℄ E BRG PIER 2 WB | 42+02.38 | -36.00 | 602.91 | 602.93 |
| 2A | 42+12.38 | -36.00 | 603.00 | 603.09 |
| 2B | 42+22.38 | -36.00 | 603.09 | 603.24 |
| 2C | 42+32.38 | -36.00 | 603.18 | 603.39 |
| 2D | 42+42.38 | -36.00 | 603.26 | 603.53 |
| 2E | 42+52.38 | -36.00 | 603.34 | 603.66 |
| 2F | 42+62.38 | -36.00 | 603.41 | 603.78 |
| 2G | 42+72.38 | -36.00 | 603.48 | 603.88 |
| 2H | 42+82.38 | -36.00 | 603.54 | 603.98 |
| 2I | 42+92.38 | -36.00 | 603.61 | 604.07 |
| 2J | 43+02.38 | -36.00 | 603.66 | 604.14 |
| 2K | 43+12.38 | -36.00 | 603.72 | 604.21 |
| 2L | 43+22.38 | -36.00 | 603.77 | 604.26 |
| 2M | 43+32.38 | -36.00 | 603.81 | 604.30 |
| 2N | 43+42.38 | -36.00 | 603.85 | 604.33 |
| 2O | 43+52.38 | -36.00 | 603.89 | 604.35 |
| 2P | 43+62.38 | -36.00 | 603.92 | 604.36 |
| 2Q | 43+72.38 | -36.00 | 603.95 | 604.36 |
| 2R | 43+82.38 | -36.00 | 603.98 | 604.35 |
| 2S | 43+92.38 | -36.00 | 604.00 | 604.33 |
| 2T | 44+02.38 | -36.00 | 604.02 | 604.30 |
| 2U | 44+12.38 | -36.00 | 604.03 | 604.27 |
| 2V | 44+22.38 | -36.00 | 604.04 | 604.23 |
| 2W | 44+32.38 | -36.00 | 604.04 | 604.19 |
| 2X | 44+42.38 | -36.00 | 604.05 | 604.16 |
| 2Y | 44+52.38 | -36.00 | 604.04 | 604.12 |
| 2Z | 44+62.38 | -36.00 | 604.04 | 604.09 |
| 2AA | 44+72.38 | -36.00 | 604.03 | 604.06 |
| 2AB | 44+82.38 | -36.00 | 604.01 | 604.03 |
| 2AC | 44+92.38 | -36.00 | 603.99 | 604.01 |
| ℄ BRG. PIER 3 WB | 45+02.38 | -36.00 | 603.97 | 603.99 |
| 2AD | 45+12.38 | -36.00 | 603.94 | 603.98 |
| 2AE | 45+22.38 | -36.00 | 603.91 | 603.97 |
| 2AF | 45+32.38 | -36.00 | 603.88 | 603.97 |
| 2AG | 45+42.38 | -36.00 | 603.84 | 603.97 |
| 2AH | 45+52.38 | -36.00 | 603.80 | 603.97 |
| 2AI | 45+62.38 | -36.00 | 603.75 | 603.97 |
| 2AJ | 45+72.38 | -36.00 | 603.70 | 603.98 |
| 2AK | 45+82.38 | -36.00 | 603.64 | 603.98 |
| 2AL | 45+92.38 | -36.00 | 603.59 | 603.98 |
| 2AM | 46+02.38 | -36.00 | 603.52 | 603.98 |
| 2AN | 46+12.38 | -36.00 | 603.46 | 603.97 |
| 2AO | 46+22.38 | -36.00 | 603.39 | 603.96 |
| 2AP | 46+32.38 | -36.00 | 603.31 | 603.93 |
| 2AQ | 46+42.38 | -36.00 | 603.23 | 603.90 |
| 2AR | 46+52.38 | -36.00 | 603.15 | 603.86 |
| 2AS | 46+62.38 | -36.00 | 603.06 | 603.80 |
| 2AT | 46+72.38 | -36.00 | 602.97 | 603.74 |
| 2AU | 46+82.38 | -36.00 | 602.88 | 603.67 |
| 2AV | 46+92.38 | -36.00 | 602.78 | 603.59 |
| 2AW | 47+02.38 | -36.00 | 602.68 | 603.49 |
| 2AX | 47+12.38 | -36.00 | 602.57 | 603.39 |
| 2AY | 47+22.38 | -36.00 | 602.46 | 603.27 |
| 2AZ | 47+32.38 | -36.00 | 602.34 | 603.15 |

## NORTH EDGE OF NORTH LANE - WB (CONT.)

| Location | Station | Offset | Theoretical Grade Elevations | Theoretical Grade Elevations Adjusted For Dead Load Deflection and Grinding |
|---|---|---|---|---|
| 2BA | 47+42.38 | -36.00 | 602.23 | 603.01 |
| 2BB | 47+52.38 | -36.00 | 602.10 | 602.86 |
| 2BC | 47+62.38 | -36.00 | 601.98 | 602.71 |
| 2BD | 47+72.38 | -36.00 | 601.85 | 602.54 |
| 2BE | 47+82.38 | -36.00 | 601.71 | 602.36 |
| 2BF | 47+92.38 | -36.00 | 601.57 | 602.17 |
| 2BG | 48+02.38 | -36.00 | 601.43 | 601.98 |
| 2BH | 48+12.38 | -36.00 | 601.28 | 601.77 |
| 2BI | 48+22.38 | -36.00 | 601.13 | 601.56 |
| 2BJ | 48+32.38 | -36.00 | 600.98 | 601.35 |
| 2BK | 48+42.38 | -36.00 | 600.82 | 601.13 |
| 2BL | 48+52.38 | -36.00 | 600.66 | 600.91 |
| 2BM | 48+62.38 | -36.00 | 600.49 | 600.69 |
| 2BN | 48+72.38 | -36.00 | 600.32 | 600.47 |
| 2BO | 48+82.38 | -36.00 | 600.14 | 600.25 |
| 2BP | 48+92.38 | -36.00 | 599.97 | 600.04 |
| 2BQ | 49+02.38 | -36.00 | 599.78 | 599.83 |
| ℄ BRG. PIER 4 WB | 49+16.38 | -36.00 | 599.52 | 599.54 |
| 2BR | 49+26.38 | -36.00 | 599.33 | 599.34 |
| 2BS | 49+36.38 | -36.00 | 599.13 | 599.15 |
| 2BT | 49+46.38 | -36.00 | 598.93 | 598.96 |
| 2BU | 49+56.38 | -36.00 | 598.73 | 598.77 |
| 2BV | 49+66.38 | -36.00 | 598.52 | 598.58 |
| 2BW | 49+76.38 | -36.00 | 598.31 | 598.40 |
| 2BX | 49+86.38 | -36.00 | 598.09 | 598.22 |
| 2BY | 49+96.38 | -36.00 | 597.87 | 598.04 |
| 2BZ | 50+06.38 | -36.00 | 597.65 | 597.85 |
| 2CA | 50+16.38 | -36.00 | 597.42 | 597.67 |
| 2CB | 50+26.38 | -36.00 | 597.19 | 597.47 |
| 2CC | 50+36.38 | -36.00 | 596.95 | 597.27 |
| 2CD | 50+46.38 | -36.00 | 596.71 | 597.07 |
| 2CE | 50+56.38 | -36.00 | 596.46 | 596.85 |
| 2CF | 50+66.38 | -36.00 | 596.22 | 596.62 |
| 2CG | 50+76.38 | -36.00 | 595.96 | 596.39 |
| 2CH | 50+86.38 | -36.00 | 595.71 | 596.14 |
| 2CI | 50+96.38 | -36.00 | 595.45 | 595.88 |
| 2CJ | 51+06.38 | -36.00 | 595.18 | 595.61 |
| 2CK | 51+16.38 | -36.00 | 594.91 | 595.33 |
| 2CL | 51+26.38 | -36.00 | 594.64 | 595.04 |
| 2CM | 51+36.38 | -36.00 | 594.37 | 594.73 |
| 2CN | 51+46.38 | -36.00 | 594.09 | 594.42 |
| 2CO | 51+56.38 | -36.00 | 593.80 | 594.10 |
| 2CP | 51+66.38 | -36.00 | 593.51 | 593.76 |
| 2CQ | 51+76.38 | -36.00 | 593.22 | 593.42 |
| 2CR | 51+86.38 | -36.00 | 592.93 | 593.07 |
| 2CS | 51+96.38 | -36.00 | 592.62 | 592.72 |
| ℄ W BRG PIER 5 WB | 52+08.38 | -36.00 | 592.26 | 592.28 |
| ℄ PIER 5 WB | 52+09.88 | -36.00 | 592.21 | 592.23 |

### NOTES:

1. All Elevations and Offsets are in feet.
2. Offsets are measured with respect to the I-80 WB PGL. Negative offsets are left and positive are right of the PGL.

# FOR INFORMATION ONLY

WSP USA Inc.
30 N. LASALLE STREET
SUITE 4200
CHICAGO, IL 60602
TEL: (312) 782-8150
FAX: (312) 782-1684

| | | | |
|---|---|---|---|
| USER NAME = USCP702533 | DESIGNED - LAS | REVISED - | |
| | CHECKED - TB | REVISED - | |
| PLOT SCALE = 100.000 ' / in. | DRAWN - GM | REVISED - | |
| PLOT DATE = 10/11/2024 | CHECKED - LAS | REVISED - | |

**STATE OF ILLINOIS**
**DEPARTMENT OF TRANSPORTATION**

**TOP OF SLAB ELEVATIONS - UNIT 2 WB**
**STRUCTURE NUMBER 099-8309 WB AND 099-8325 EB**

SHEET S-25 OF S-87 SHEETS

| F.A.I RTE. | SECTION | COUNTY | TOTAL SHEETS | SHEET NO. |
|---|---|---|---|---|
| I-80 | (99-3DEFP) HF 23 | WILL | 89 | 27 |
| | | CONTRACT NO. 62W52 | | |
| | ILLINOIS | FED. AID PROJECT | | |

MODEL: Default
FILE NAME: pw://transystems-pw.bentley.com:transyscorp-pw1-hosted/Documents/Projects_2018/CH401/401180022/03-WSP/CAD/62W52-SF-3/Sheets/0998309-82W52-S025-DEW206.dgn

## GIRDER W4

| Location | Station | Offset | Theoretical Grade Elevations | Theoretical Grade Elevations Adjusted For Dead Load Deflection and Grinding |
|---|---|---|---|---|
| ℄ PIER 2 WB | 42+01.21 | -28.79 | 603.01 | 603.03 |
| ℄ E BRG PIER 2 WB | 42+02.38 | -28.79 | 603.02 | 603.04 |
| 2A | 42+12.38 | -28.79 | 603.11 | 603.20 |
| 2B | 42+22.38 | -28.79 | 603.20 | 603.35 |
| 2C | 42+32.38 | -28.79 | 603.29 | 603.50 |
| 2D | 42+42.38 | -28.79 | 603.37 | 603.63 |
| 2E | 42+52.38 | -28.79 | 603.44 | 603.76 |
| 2F | 42+62.38 | -28.79 | 603.52 | 603.88 |
| 2G | 42+72.38 | -28.79 | 603.59 | 603.99 |
| 2H | 42+82.38 | -28.79 | 603.65 | 604.09 |
| 2I | 42+92.38 | -28.79 | 603.71 | 604.18 |
| 2J | 43+02.38 | -28.79 | 603.77 | 604.25 |
| 2K | 43+12.38 | -28.79 | 603.82 | 604.32 |
| 2L | 43+22.38 | -28.79 | 603.87 | 604.37 |
| 2M | 43+32.38 | -28.79 | 603.92 | 604.41 |
| 2N | 43+42.38 | -28.79 | 603.96 | 604.44 |
| 2O | 43+52.38 | -28.79 | 604.00 | 604.46 |
| 2P | 43+62.38 | -28.79 | 604.03 | 604.47 |
| 2Q | 43+72.38 | -28.79 | 604.06 | 604.47 |
| 2R | 43+82.38 | -28.79 | 604.09 | 604.46 |
| 2S | 43+92.38 | -28.79 | 604.11 | 604.44 |
| 2T | 44+02.38 | -28.79 | 604.12 | 604.41 |
| 2U | 44+12.38 | -28.79 | 604.14 | 604.38 |
| 2V | 44+22.38 | -28.79 | 604.15 | 604.34 |
| 2W | 44+32.38 | -28.79 | 604.15 | 604.30 |
| 2X | 44+42.38 | -28.79 | 604.15 | 604.26 |
| 2Y | 44+52.38 | -28.79 | 604.15 | 604.23 |
| 2Z | 44+62.38 | -28.79 | 604.14 | 604.20 |
| 2AA | 44+72.38 | -28.79 | 604.13 | 604.17 |
| 2AB | 44+82.38 | -28.79 | 604.12 | 604.14 |
| 2AC | 44+92.38 | -28.79 | 604.10 | 604.12 |
| ℄ BRG. PIER 3 WB | 45+02.38 | -28.79 | 604.08 | 604.10 |
| 2AD | 45+12.38 | -28.79 | 604.05 | 604.09 |
| 2AE | 45+22.38 | -28.79 | 604.02 | 604.08 |
| 2AF | 45+32.38 | -28.79 | 603.99 | 604.08 |
| 2AG | 45+42.38 | -28.79 | 603.95 | 604.07 |
| 2AH | 45+52.38 | -28.79 | 603.90 | 604.08 |
| 2AI | 45+62.38 | -28.79 | 603.86 | 604.08 |
| 2AJ | 45+72.38 | -28.79 | 603.81 | 604.08 |
| 2AK | 45+82.38 | -28.79 | 603.75 | 604.09 |
| 2AL | 45+92.38 | -28.79 | 603.69 | 604.09 |
| 2AM | 46+02.38 | -28.79 | 603.63 | 604.09 |
| 2AN | 46+12.38 | -28.79 | 603.56 | 604.08 |
| 2AO | 46+22.38 | -28.79 | 603.49 | 604.06 |
| 2AP | 46+32.38 | -28.79 | 603.42 | 604.04 |
| 2AQ | 46+42.38 | -28.79 | 603.34 | 604.01 |
| 2AR | 46+52.38 | -28.79 | 603.26 | 603.96 |
| 2AS | 46+62.38 | -28.79 | 603.17 | 603.91 |
| 2AT | 46+72.38 | -28.79 | 603.08 | 603.85 |
| 2AU | 46+82.38 | -28.79 | 602.99 | 603.78 |
| 2AV | 46+92.38 | -28.79 | 602.89 | 603.70 |
| 2AW | 47+02.38 | -28.79 | 602.78 | 603.60 |
| 2AX | 47+12.38 | -28.79 | 602.68 | 603.50 |
| 2AY | 47+22.38 | -28.79 | 602.57 | 603.38 |
| 2AZ | 47+32.38 | -28.79 | 602.45 | 603.26 |

## GIRDER W4 (CONT.)

| Location | Station | Offset | Theoretical Grade Elevations | Theoretical Grade Elevations Adjusted For Dead Load Deflection and Grinding |
|---|---|---|---|---|
| 2BA | 47+42.38 | -28.79 | 602.33 | 603.12 |
| 2BB | 47+52.38 | -28.79 | 602.21 | 602.97 |
| 2BC | 47+62.38 | -28.79 | 602.08 | 602.81 |
| 2BD | 47+72.38 | -28.79 | 601.95 | 602.65 |
| 2BE | 47+82.38 | -28.79 | 601.82 | 602.47 |
| 2BF | 47+92.38 | -28.79 | 601.68 | 602.28 |
| 2BG | 48+02.38 | -28.79 | 601.54 | 602.09 |
| 2BH | 48+12.38 | -28.79 | 601.39 | 601.88 |
| 2BI | 48+22.38 | -28.79 | 601.24 | 601.67 |
| 2BJ | 48+32.38 | -28.79 | 601.09 | 601.46 |
| 2BK | 48+42.38 | -28.79 | 600.93 | 601.24 |
| 2BL | 48+52.38 | -28.79 | 600.76 | 601.02 |
| 2BM | 48+62.38 | -28.79 | 600.60 | 600.80 |
| 2BN | 48+72.38 | -28.79 | 600.43 | 600.58 |
| 2BO | 48+82.38 | -28.79 | 600.25 | 600.36 |
| 2BP | 48+92.38 | -28.79 | 600.07 | 600.15 |
| 2BQ | 49+02.38 | -28.79 | 599.89 | 599.94 |
| ℄ BRG. PIER 4 WB | 49+16.38 | -28.79 | 599.63 | 599.65 |
| 2BR | 49+26.38 | -28.79 | 599.44 | 599.45 |
| 2BS | 49+36.38 | -28.79 | 599.24 | 599.26 |
| 2BT | 49+46.38 | -28.79 | 599.04 | 599.06 |
| 2BU | 49+56.38 | -28.79 | 598.84 | 598.87 |
| 2BV | 49+66.38 | -28.79 | 598.63 | 598.69 |
| 2BW | 49+76.38 | -28.79 | 598.41 | 598.51 |
| 2BX | 49+86.38 | -28.79 | 598.20 | 598.32 |
| 2BY | 49+96.38 | -28.79 | 597.98 | 598.14 |
| 2BZ | 50+06.38 | -28.79 | 597.75 | 597.96 |
| 2CA | 50+16.38 | -28.79 | 597.53 | 597.77 |
| 2CB | 50+26.38 | -28.79 | 597.29 | 597.58 |
| 2CC | 50+36.38 | -28.79 | 597.06 | 597.38 |
| 2CD | 50+46.38 | -28.79 | 596.82 | 597.17 |
| 2CE | 50+56.38 | -28.79 | 596.57 | 596.96 |
| 2CF | 50+66.38 | -28.79 | 596.32 | 596.73 |
| 2CG | 50+76.38 | -28.79 | 596.07 | 596.49 |
| 2CH | 50+86.38 | -28.79 | 595.82 | 596.25 |
| 2CI | 50+96.38 | -28.79 | 595.56 | 595.99 |
| 2CJ | 51+06.38 | -28.79 | 595.29 | 595.72 |
| 2CK | 51+16.38 | -28.79 | 595.02 | 595.44 |
| 2CL | 51+26.38 | -28.79 | 594.75 | 595.14 |
| 2CM | 51+36.38 | -28.79 | 594.47 | 594.84 |
| 2CN | 51+46.38 | -28.79 | 594.19 | 594.53 |
| 2CO | 51+56.38 | -28.79 | 593.91 | 594.21 |
| 2CP | 51+66.38 | -28.79 | 593.62 | 593.87 |
| 2CQ | 51+76.38 | -28.79 | 593.33 | 593.53 |
| 2CR | 51+86.38 | -28.79 | 593.03 | 593.18 |
| 2CS | 51+96.38 | -28.79 | 592.73 | 592.82 |
| ℄ W BRG PIER 5 WB | 52+08.38 | -28.79 | 592.37 | 592.39 |
| ℄ PIER 5 WB | 52+09.88 | -28.79 | 592.32 | 592.34 |

## CROWN - WB

| Location | Station | Offset | Theoretical Grade Elevations | Theoretical Grade Elevations Adjusted For Dead Load Deflection and Grinding |
|---|---|---|---|---|
| ℄ PIER 2 WB | 42+01.21 | -24.00 | 603.08 | 603.10 |
| ℄ E BRG PIER 2 WB | 42+02.38 | -24.00 | 603.09 | 603.11 |
| 2A | 42+12.38 | -24.00 | 603.18 | 603.27 |
| 2B | 42+22.38 | -24.00 | 603.27 | 603.42 |
| 2C | 42+32.38 | -24.00 | 603.36 | 603.57 |
| 2D | 42+42.38 | -24.00 | 603.44 | 603.71 |
| 2E | 42+52.38 | -24.00 | 603.52 | 603.84 |
| 2F | 42+62.38 | -24.00 | 603.59 | 603.96 |
| 2G | 42+72.38 | -24.00 | 603.66 | 604.06 |
| 2H | 42+82.38 | -24.00 | 603.72 | 604.16 |
| 2I | 42+92.38 | -24.00 | 603.79 | 604.25 |
| 2J | 43+02.38 | -24.00 | 603.84 | 604.32 |
| 2K | 43+12.38 | -24.00 | 603.90 | 604.39 |
| 2L | 43+22.38 | -24.00 | 603.95 | 604.44 |
| 2M | 43+32.38 | -24.00 | 603.99 | 604.48 |
| 2N | 43+42.38 | -24.00 | 604.03 | 604.51 |
| 2O | 43+52.38 | -24.00 | 604.07 | 604.53 |
| 2P | 43+62.38 | -24.00 | 604.10 | 604.54 |
| 2Q | 43+72.38 | -24.00 | 604.13 | 604.54 |
| 2R | 43+82.38 | -24.00 | 604.16 | 604.53 |
| 2S | 43+92.38 | -24.00 | 604.18 | 604.51 |
| 2T | 44+02.38 | -24.00 | 604.20 | 604.48 |
| 2U | 44+12.38 | -24.00 | 604.21 | 604.45 |
| 2V | 44+22.38 | -24.00 | 604.22 | 604.41 |
| 2W | 44+32.38 | -24.00 | 604.22 | 604.37 |
| 2X | 44+42.38 | -24.00 | 604.23 | 604.34 |
| 2Y | 44+52.38 | -24.00 | 604.22 | 604.30 |
| 2Z | 44+62.38 | -24.00 | 604.22 | 604.27 |
| 2AA | 44+72.38 | -24.00 | 604.21 | 604.24 |
| 2AB | 44+82.38 | -24.00 | 604.19 | 604.21 |
| 2AC | 44+92.38 | -24.00 | 604.17 | 604.19 |
| ℄ BRG. PIER 3 WB | 45+02.38 | -24.00 | 604.15 | 604.17 |
| 2AD | 45+12.38 | -24.00 | 604.12 | 604.16 |
| 2AE | 45+22.38 | -24.00 | 604.09 | 604.15 |
| 2AF | 45+32.38 | -24.00 | 604.06 | 604.15 |
| 2AG | 45+42.38 | -24.00 | 604.02 | 604.15 |
| 2AH | 45+52.38 | -24.00 | 603.98 | 604.15 |
| 2AI | 45+62.38 | -24.00 | 603.93 | 604.15 |
| 2AJ | 45+72.38 | -24.00 | 603.88 | 604.16 |
| 2AK | 45+82.38 | -24.00 | 603.82 | 604.16 |
| 2AL | 45+92.38 | -24.00 | 603.77 | 604.16 |
| 2AM | 46+02.38 | -24.00 | 603.70 | 604.16 |
| 2AN | 46+12.38 | -24.00 | 603.64 | 604.15 |
| 2AO | 46+22.38 | -24.00 | 603.57 | 604.14 |
| 2AP | 46+32.38 | -24.00 | 603.49 | 604.11 |
| 2AQ | 46+42.38 | -24.00 | 603.41 | 604.08 |
| 2AR | 46+52.38 | -24.00 | 603.33 | 604.04 |
| 2AS | 46+62.38 | -24.00 | 603.24 | 603.98 |
| 2AT | 46+72.38 | -24.00 | 603.15 | 603.92 |
| 2AU | 46+82.38 | -24.00 | 603.06 | 603.85 |
| 2AV | 46+92.38 | -24.00 | 602.96 | 603.77 |
| 2AW | 47+02.38 | -24.00 | 602.86 | 603.67 |
| 2AX | 47+12.38 | -24.00 | 602.75 | 603.57 |
| 2AY | 47+22.38 | -24.00 | 602.64 | 603.45 |
| 2AZ | 47+32.38 | -24.00 | 602.52 | 603.33 |

### NOTES:

1. All Elevations and Offsets are in feet.
2. Offsets are measured with respect to the I-80 WB PGL. Negative offsets are left and positive are right of the PGL.

# FOR INFORMATION ONLY

WSP USA Inc.
30 N. LASALLE STREET
SUITE 4200
CHICAGO, IL 60602
TEL: (312) 782-8150
FAX: (312) 782-1684

| | | | |
|---|---|---|---|
| USER NAME = USCP702533 | DESIGNED - LAS | REVISED - | |
| | CHECKED - TB | REVISED - | |
| PLOT SCALE = 100.000 ' / in. | DRAWN - GM | REVISED - | |
| PLOT DATE = 10/11/2024 | CHECKED - LAS | REVISED - | |

**STATE OF ILLINOIS**
**DEPARTMENT OF TRANSPORTATION**

**TOP OF SLAB ELEVATIONS - UNIT 2 WB**
**STRUCTURE NUMBER 099-8309 WB AND 099-8325 EB**

SHEET S-26 OF S-87 SHEETS

| F.A.I RTE. | SECTION | COUNTY | TOTAL SHEETS | SHEET NO. |
|---|---|---|---|---|
| I-80 | (99-3DEFP) HF 23 | WILL | 89 | 28 |
| | | CONTRACT NO. 62W52 | | |
| | ILLINOIS | FED. AID PROJECT | | |

MODEL: Default
FILE NAME: pw://transystems-pw.bentley.com:transyscorp-pw1-hosted\Documents\Projects_2018\CH401\401180022\03-WSP\CAD\62W52-SF-3\Sheets\0998309-E2W52-S026-DEW207.dgn

## CROWN - WB (CONT.)

| Location | Station | Offset | Theoretical Grade Elevations | Theoretical Grade Elevations Adjusted For Dead Load Deflection and Grinding |
|---|---|---|---|---|
| 2BA | 47+42.38 | -24.00 | 602.41 | 603.19 |
| 2BB | 47+52.38 | -24.00 | 602.28 | 603.04 |
| 2BC | 47+62.38 | -24.00 | 602.16 | 602.89 |
| 2BD | 47+72.38 | -24.00 | 602.03 | 602.72 |
| 2BE | 47+82.38 | -24.00 | 601.89 | 602.54 |
| 2BF | 47+92.38 | -24.00 | 601.75 | 602.35 |
| 2BG | 48+02.38 | -24.00 | 601.61 | 602.16 |
| 2BH | 48+12.38 | -24.00 | 601.46 | 601.95 |
| 2BI | 48+22.38 | -24.00 | 601.31 | 601.74 |
| 2BJ | 48+32.38 | -24.00 | 601.16 | 601.53 |
| 2BK | 48+42.38 | -24.00 | 601.00 | 601.31 |
| 2BL | 48+52.38 | -24.00 | 600.84 | 601.09 |
| 2BM | 48+62.38 | -24.00 | 600.67 | 600.87 |
| 2BN | 48+72.38 | -24.00 | 600.50 | 600.65 |
| 2BO | 48+82.38 | -24.00 | 600.32 | 600.43 |
| 2BP | 48+92.38 | -24.00 | 600.15 | 600.22 |
| 2BQ | 49+02.38 | -24.00 | 599.96 | 600.01 |
| ℄ BRG. PIER 4 WB | 49+16.38 | -24.00 | 599.70 | 599.72 |
| 2BR | 49+26.38 | -24.00 | 599.51 | 599.52 |
| 2BS | 49+36.38 | -24.00 | 599.31 | 599.33 |
| 2BT | 49+46.38 | -24.00 | 599.11 | 599.14 |
| 2BU | 49+56.38 | -24.00 | 598.91 | 598.95 |
| 2BV | 49+66.38 | -24.00 | 598.70 | 598.76 |
| 2BW | 49+76.38 | -24.00 | 598.49 | 598.58 |
| 2BX | 49+86.38 | -24.00 | 598.27 | 598.40 |
| 2BY | 49+96.38 | -24.00 | 598.05 | 598.22 |
| 2BZ | 50+06.38 | -24.00 | 597.83 | 598.03 |
| 2CA | 50+16.38 | -24.00 | 597.60 | 597.85 |
| 2CB | 50+26.38 | -24.00 | 597.37 | 597.65 |
| 2CC | 50+36.38 | -24.00 | 597.13 | 597.45 |
| 2CD | 50+46.38 | -24.00 | 596.89 | 597.25 |
| 2CE | 50+56.38 | -24.00 | 596.64 | 597.03 |
| 2CF | 50+66.38 | -24.00 | 596.40 | 596.80 |
| 2CG | 50+76.38 | -24.00 | 596.14 | 596.57 |
| 2CH | 50+86.38 | -24.00 | 595.89 | 596.32 |
| 2CI | 50+96.38 | -24.00 | 595.63 | 596.06 |
| 2CJ | 51+06.38 | -24.00 | 595.36 | 595.79 |
| 2CK | 51+16.38 | -24.00 | 595.09 | 595.51 |
| 2CL | 51+26.38 | -24.00 | 594.82 | 595.22 |
| 2CM | 51+36.38 | -24.00 | 594.55 | 594.91 |
| 2CN | 51+46.38 | -24.00 | 594.27 | 594.60 |
| 2CO | 51+56.38 | -24.00 | 593.98 | 594.28 |
| 2CP | 51+66.38 | -24.00 | 593.69 | 593.94 |
| 2CQ | 51+76.38 | -24.00 | 593.40 | 593.60 |
| 2CR | 51+86.38 | -24.00 | 593.11 | 593.25 |
| 2CS | 51+96.38 | -24.00 | 592.80 | 592.90 |
| ℄ W BRG PIER 5 WB | 52+08.38 | -24.00 | 592.44 | 592.46 |
| ℄ PIER 5 WB | 52+09.88 | -24.00 | 592.39 | 592.41 |

## GIRDER W5

| Location | Station | Offset | Theoretical Grade Elevations | Theoretical Grade Elevations Adjusted For Dead Load Deflection and Grinding |
|---|---|---|---|---|
| ℄ PIER 2 WB | 42+01.21 | -19.21 | 603.01 | 603.03 |
| ℄ E BRG PIER 2 WB | 42+02.38 | -19.21 | 603.02 | 603.04 |
| 2A | 42+12.38 | -19.21 | 603.11 | 603.20 |
| 2B | 42+22.38 | -19.21 | 603.20 | 603.35 |
| 2C | 42+32.38 | -19.21 | 603.29 | 603.50 |
| 2D | 42+42.38 | -19.21 | 603.37 | 603.63 |
| 2E | 42+52.38 | -19.21 | 603.44 | 603.76 |
| 2F | 42+62.38 | -19.21 | 603.52 | 603.88 |
| 2G | 42+72.38 | -19.21 | 603.59 | 603.99 |
| 2H | 42+82.38 | -19.21 | 603.65 | 604.09 |
| 2I | 42+92.38 | -19.21 | 603.71 | 604.18 |
| 2J | 43+02.38 | -19.21 | 603.77 | 604.25 |
| 2K | 43+12.38 | -19.21 | 603.82 | 604.32 |
| 2L | 43+22.38 | -19.21 | 603.87 | 604.37 |
| 2M | 43+32.38 | -19.21 | 603.92 | 604.41 |
| 2N | 43+42.38 | -19.21 | 603.96 | 604.44 |
| 2O | 43+52.38 | -19.21 | 604.00 | 604.46 |
| 2P | 43+62.38 | -19.21 | 604.03 | 604.47 |
| 2Q | 43+72.38 | -19.21 | 604.06 | 604.47 |
| 2R | 43+82.38 | -19.21 | 604.09 | 604.46 |
| 2S | 43+92.38 | -19.21 | 604.11 | 604.44 |
| 2T | 44+02.38 | -19.21 | 604.12 | 604.41 |
| 2U | 44+12.38 | -19.21 | 604.14 | 604.38 |
| 2V | 44+22.38 | -19.21 | 604.15 | 604.34 |
| 2W | 44+32.38 | -19.21 | 604.15 | 604.30 |
| 2X | 44+42.38 | -19.21 | 604.15 | 604.26 |
| 2Y | 44+52.38 | -19.21 | 604.15 | 604.23 |
| 2Z | 44+62.38 | -19.21 | 604.14 | 604.20 |
| 2AA | 44+72.38 | -19.21 | 604.13 | 604.17 |
| 2AB | 44+82.38 | -19.21 | 604.12 | 604.14 |
| 2AC | 44+92.38 | -19.21 | 604.10 | 604.12 |
| ℄ BRG. PIER 3 WB | 45+02.38 | -19.21 | 604.08 | 604.10 |
| 2AD | 45+12.38 | -19.21 | 604.05 | 604.09 |
| 2AE | 45+22.38 | -19.21 | 604.02 | 604.08 |
| 2AF | 45+32.38 | -19.21 | 603.99 | 604.08 |
| 2AG | 45+42.38 | -19.21 | 603.95 | 604.07 |
| 2AH | 45+52.38 | -19.21 | 603.90 | 604.08 |
| 2AI | 45+62.38 | -19.21 | 603.86 | 604.08 |
| 2AJ | 45+72.38 | -19.21 | 603.81 | 604.08 |
| 2AK | 45+82.38 | -19.21 | 603.75 | 604.09 |
| 2AL | 45+92.38 | -19.21 | 603.69 | 604.09 |
| 2AM | 46+02.38 | -19.21 | 603.63 | 604.09 |
| 2AN | 46+12.38 | -19.21 | 603.56 | 604.08 |
| 2AO | 46+22.38 | -19.21 | 603.49 | 604.06 |
| 2AP | 46+32.38 | -19.21 | 603.42 | 604.04 |
| 2AQ | 46+42.38 | -19.21 | 603.34 | 604.01 |
| 2AR | 46+52.38 | -19.21 | 603.26 | 603.96 |
| 2AS | 46+62.38 | -19.21 | 603.17 | 603.91 |
| 2AT | 46+72.38 | -19.21 | 603.08 | 603.85 |
| 2AU | 46+82.38 | -19.21 | 602.99 | 603.78 |
| 2AV | 46+92.38 | -19.21 | 602.89 | 603.70 |
| 2AW | 47+02.38 | -19.21 | 602.78 | 603.60 |
| 2AX | 47+12.38 | -19.21 | 602.68 | 603.50 |
| 2AY | 47+22.38 | -19.21 | 602.57 | 603.38 |
| 2AZ | 47+32.38 | -19.21 | 602.45 | 603.26 |

## GIRDER W5 (CONT.)

| Location | Station | Offset | Theoretical Grade Elevations | Theoretical Grade Elevations Adjusted For Dead Load Deflection and Grinding |
|---|---|---|---|---|
| 2BA | 47+42.38 | -19.21 | 602.33 | 603.12 |
| 2BB | 47+52.38 | -19.21 | 602.21 | 602.97 |
| 2BC | 47+62.38 | -19.21 | 602.08 | 602.81 |
| 2BD | 47+72.38 | -19.21 | 601.95 | 602.65 |
| 2BE | 47+82.38 | -19.21 | 601.82 | 602.47 |
| 2BF | 47+92.38 | -19.21 | 601.68 | 602.28 |
| 2BG | 48+02.38 | -19.21 | 601.54 | 602.09 |
| 2BH | 48+12.38 | -19.21 | 601.39 | 601.88 |
| 2BI | 48+22.38 | -19.21 | 601.24 | 601.67 |
| 2BJ | 48+32.38 | -19.21 | 601.09 | 601.46 |
| 2BK | 48+42.38 | -19.21 | 600.93 | 601.24 |
| 2BL | 48+52.38 | -19.21 | 600.76 | 601.02 |
| 2BM | 48+62.38 | -19.21 | 600.60 | 600.80 |
| 2BN | 48+72.38 | -19.21 | 600.43 | 600.58 |
| 2BO | 48+82.38 | -19.21 | 600.25 | 600.36 |
| 2BP | 48+92.38 | -19.21 | 600.07 | 600.15 |
| 2BQ | 49+02.38 | -19.21 | 599.89 | 599.94 |
| ℄ BRG. PIER 4 WB | 49+16.38 | -19.21 | 599.63 | 599.65 |
| 2BR | 49+26.38 | -19.21 | 599.44 | 599.45 |
| 2BS | 49+36.38 | -19.21 | 599.24 | 599.26 |
| 2BT | 49+46.38 | -19.21 | 599.04 | 599.06 |
| 2BU | 49+56.38 | -19.21 | 598.84 | 598.87 |
| 2BV | 49+66.38 | -19.21 | 598.63 | 598.69 |
| 2BW | 49+76.38 | -19.21 | 598.41 | 598.51 |
| 2BX | 49+86.38 | -19.21 | 598.20 | 598.32 |
| 2BY | 49+96.38 | -19.21 | 597.98 | 598.14 |
| 2BZ | 50+06.38 | -19.21 | 597.75 | 597.96 |
| 2CA | 50+16.38 | -19.21 | 597.53 | 597.77 |
| 2CB | 50+26.38 | -19.21 | 597.29 | 597.58 |
| 2CC | 50+36.38 | -19.21 | 597.06 | 597.38 |
| 2CD | 50+46.38 | -19.21 | 596.82 | 597.17 |
| 2CE | 50+56.38 | -19.21 | 596.57 | 596.96 |
| 2CF | 50+66.38 | -19.21 | 596.32 | 596.73 |
| 2CG | 50+76.38 | -19.21 | 596.07 | 596.49 |
| 2CH | 50+86.38 | -19.21 | 595.82 | 596.25 |
| 2CI | 50+96.38 | -19.21 | 595.56 | 595.99 |
| 2CJ | 51+06.38 | -19.21 | 595.29 | 595.72 |
| 2CK | 51+16.38 | -19.21 | 595.02 | 595.44 |
| 2CL | 51+26.38 | -19.21 | 594.75 | 595.14 |
| 2CM | 51+36.38 | -19.21 | 594.47 | 594.84 |
| 2CN | 51+46.38 | -19.21 | 594.19 | 594.53 |
| 2CO | 51+56.38 | -19.21 | 593.91 | 594.21 |
| 2CP | 51+66.38 | -19.21 | 593.62 | 593.87 |
| 2CQ | 51+76.38 | -19.21 | 593.33 | 593.53 |
| 2CR | 51+86.38 | -19.21 | 593.03 | 593.18 |
| 2CS | 51+96.38 | -19.21 | 592.73 | 592.82 |
| ℄ W BRG PIER 5 WB | 52+08.38 | -19.21 | 592.37 | 592.39 |
| ℄ PIER 5 WB | 52+09.88 | -19.21 | 592.32 | 592.34 |

### NOTES:

1. All Elevations and Offsets are in feet.
2. Offsets are measured with respect to the I-80 WB PGL. Negative offsets are left and positive are right of the PGL.

# FOR INFORMATION ONLY


WSP USA Inc.
30 N. LASALLE STREET
SUITE 4200
CHICAGO, IL 60602
TEL: (312) 782-8150
FAX: (312) 782-1684


| | | | |
|---|---|---|---|
| USER NAME = USCP702533 | DESIGNED - LAS | REVISED - | |
| | CHECKED - TB | REVISED - | |
| PLOT SCALE = 100.000 ' / in. | DRAWN - GM | REVISED - | |
| PLOT DATE = 10/11/2024 | CHECKED - LAS | REVISED - | |

**STATE OF ILLINOIS**
**DEPARTMENT OF TRANSPORTATION**

**TOP OF SLAB ELEVATIONS - UNIT 2 WB**
**STRUCTURE NUMBER 099-8309 WB AND 099-8325 EB**

SHEET S-27 OF S-87 SHEETS

| F.A.I RTE. | SECTION | COUNTY | TOTAL SHEETS | SHEET NO. |
|---|---|---|---|---|
| I-80 | (99-3DEFP) HF 23 | WILL | 89 | 29 |
| | | CONTRACT NO. 62W52 | | |
| | ILLINOIS | FED. AID PROJECT | | |


MODEL: Default
FILE NAME: pw://transystems-pw.bentley.com:transyscorp-pw1-hosted/Documents/Projects_2018/CH401/401180022/03-WSP/CAD/62W52-SF-3/Sheets/0998309-82W52-S027-DEW208.dgn

## NORTH EDGE OF SOUTH LANE - WB

| Location | Station | Offset | Theoretical Grade Elevations | Theoretical Grade Elevations Adjusted For Dead Load Deflection and Grinding |
|---|---|---|---|---|
| ℄ PIER 2 WB | 42+01.21 | -12.00 | 602.90 | 602.92 |
| ℄ E BRG PIER 2 WB | 42+02.38 | -12.00 | 602.91 | 602.93 |
| 2A | 42+12.38 | -12.00 | 603.00 | 603.09 |
| 2B | 42+22.38 | -12.00 | 603.09 | 603.24 |
| 2C | 42+32.38 | -12.00 | 603.18 | 603.39 |
| 2D | 42+42.38 | -12.00 | 603.26 | 603.53 |
| 2E | 42+52.38 | -12.00 | 603.34 | 603.66 |
| 2F | 42+62.38 | -12.00 | 603.41 | 603.78 |
| 2G | 42+72.38 | -12.00 | 603.48 | 603.88 |
| 2H | 42+82.38 | -12.00 | 603.54 | 603.98 |
| 2I | 42+92.38 | -12.00 | 603.61 | 604.07 |
| 2J | 43+02.38 | -12.00 | 603.66 | 604.14 |
| 2K | 43+12.38 | -12.00 | 603.72 | 604.21 |
| 2L | 43+22.38 | -12.00 | 603.77 | 604.26 |
| 2M | 43+32.38 | -12.00 | 603.81 | 604.30 |
| 2N | 43+42.38 | -12.00 | 603.85 | 604.33 |
| 2O | 43+52.38 | -12.00 | 603.89 | 604.35 |
| 2P | 43+62.38 | -12.00 | 603.92 | 604.36 |
| 2Q | 43+72.38 | -12.00 | 603.95 | 604.36 |
| 2R | 43+82.38 | -12.00 | 603.98 | 604.35 |
| 2S | 43+92.38 | -12.00 | 604.00 | 604.33 |
| 2T | 44+02.38 | -12.00 | 604.02 | 604.30 |
| 2U | 44+12.38 | -12.00 | 604.03 | 604.27 |
| 2V | 44+22.38 | -12.00 | 604.04 | 604.23 |
| 2W | 44+32.38 | -12.00 | 604.04 | 604.19 |
| 2X | 44+42.38 | -12.00 | 604.05 | 604.16 |
| 2Y | 44+52.38 | -12.00 | 604.04 | 604.12 |
| 2Z | 44+62.38 | -12.00 | 604.04 | 604.09 |
| 2AA | 44+72.38 | -12.00 | 604.03 | 604.06 |
| 2AB | 44+82.38 | -12.00 | 604.01 | 604.03 |
| 2AC | 44+92.38 | -12.00 | 603.99 | 604.01 |
| ℄ BRG. PIER 3 WB | 45+02.38 | -12.00 | 603.97 | 603.99 |
| 2AD | 45+12.38 | -12.00 | 603.94 | 603.98 |
| 2AE | 45+22.38 | -12.00 | 603.91 | 603.97 |
| 2AF | 45+32.38 | -12.00 | 603.88 | 603.97 |
| 2AG | 45+42.38 | -12.00 | 603.84 | 603.97 |
| 2AH | 45+52.38 | -12.00 | 603.80 | 603.97 |
| 2AI | 45+62.38 | -12.00 | 603.75 | 603.97 |
| 2AJ | 45+72.38 | -12.00 | 603.70 | 603.98 |
| 2AK | 45+82.38 | -12.00 | 603.64 | 603.98 |
| 2AL | 45+92.38 | -12.00 | 603.59 | 603.98 |
| 2AM | 46+02.38 | -12.00 | 603.52 | 603.98 |
| 2AN | 46+12.38 | -12.00 | 603.46 | 603.97 |
| 2AO | 46+22.38 | -12.00 | 603.39 | 603.96 |
| 2AP | 46+32.38 | -12.00 | 603.31 | 603.93 |
| 2AQ | 46+42.38 | -12.00 | 603.23 | 603.90 |
| 2AR | 46+52.38 | -12.00 | 603.15 | 603.86 |
| 2AS | 46+62.38 | -12.00 | 603.06 | 603.80 |
| 2AT | 46+72.38 | -12.00 | 602.97 | 603.74 |
| 2AU | 46+82.38 | -12.00 | 602.88 | 603.67 |
| 2AV | 46+92.38 | -12.00 | 602.78 | 603.59 |
| 2AW | 47+02.38 | -12.00 | 602.68 | 603.49 |
| 2AX | 47+12.38 | -12.00 | 602.57 | 603.39 |
| 2AY | 47+22.38 | -12.00 | 602.46 | 603.27 |
| 2AZ | 47+32.38 | -12.00 | 602.34 | 603.15 |

## NORTH EDGE OF SOUTH LANE - WB (CONT.)

| Location | Station | Offset | Theoretical Grade Elevations | Theoretical Grade Elevations Adjusted For Dead Load Deflection and Grinding |
|---|---|---|---|---|
| 2BA | 47+42.38 | -12.00 | 602.23 | 603.01 |
| 2BB | 47+52.38 | -12.00 | 602.10 | 602.86 |
| 2BC | 47+62.38 | -12.00 | 601.98 | 602.71 |
| 2BD | 47+72.38 | -12.00 | 601.85 | 602.54 |
| 2BE | 47+82.38 | -12.00 | 601.71 | 602.36 |
| 2BF | 47+92.38 | -12.00 | 601.57 | 602.17 |
| 2BG | 48+02.38 | -12.00 | 601.43 | 601.98 |
| 2BH | 48+12.38 | -12.00 | 601.28 | 601.77 |
| 2BI | 48+22.38 | -12.00 | 601.13 | 601.56 |
| 2BJ | 48+32.38 | -12.00 | 600.98 | 601.35 |
| 2BK | 48+42.38 | -12.00 | 600.82 | 601.13 |
| 2BL | 48+52.38 | -12.00 | 600.66 | 600.91 |
| 2BM | 48+62.38 | -12.00 | 600.49 | 600.69 |
| 2BN | 48+72.38 | -12.00 | 600.32 | 600.47 |
| 2BO | 48+82.38 | -12.00 | 600.14 | 600.25 |
| 2BP | 48+92.38 | -12.00 | 599.97 | 600.04 |
| 2BQ | 49+02.38 | -12.00 | 599.78 | 599.83 |
| ℄ BRG. PIER 4 WB | 49+16.38 | -12.00 | 599.52 | 599.54 |
| 2BR | 49+26.38 | -12.00 | 599.33 | 599.34 |
| 2BS | 49+36.38 | -12.00 | 599.13 | 599.15 |
| 2BT | 49+46.38 | -12.00 | 598.93 | 598.96 |
| 2BU | 49+56.38 | -12.00 | 598.73 | 598.77 |
| 2BV | 49+66.38 | -12.00 | 598.52 | 598.58 |
| 2BW | 49+76.38 | -12.00 | 598.31 | 598.40 |
| 2BX | 49+86.38 | -12.00 | 598.09 | 598.22 |
| 2BY | 49+96.38 | -12.00 | 597.87 | 598.04 |
| 2BZ | 50+06.38 | -12.00 | 597.65 | 597.85 |
| 2CA | 50+16.38 | -12.00 | 597.42 | 597.67 |
| 2CB | 50+26.38 | -12.00 | 597.19 | 597.47 |
| 2CC | 50+36.38 | -12.00 | 596.95 | 597.27 |
| 2CD | 50+46.38 | -12.00 | 596.71 | 597.07 |
| 2CE | 50+56.38 | -12.00 | 596.46 | 596.85 |
| 2CF | 50+66.38 | -12.00 | 596.22 | 596.62 |
| 2CG | 50+76.38 | -12.00 | 595.96 | 596.39 |
| 2CH | 50+86.38 | -12.00 | 595.71 | 596.14 |
| 2CI | 50+96.38 | -12.00 | 595.45 | 595.88 |
| 2CJ | 51+06.38 | -12.00 | 595.18 | 595.61 |
| 2CK | 51+16.38 | -12.00 | 594.91 | 595.33 |
| 2CL | 51+26.38 | -12.00 | 594.64 | 595.04 |
| 2CM | 51+36.38 | -12.00 | 594.37 | 594.73 |
| 2CN | 51+46.38 | -12.00 | 594.09 | 594.42 |
| 2CO | 51+56.38 | -12.00 | 593.80 | 594.10 |
| 2CP | 51+66.38 | -12.00 | 593.51 | 593.76 |
| 2CQ | 51+76.38 | -12.00 | 593.22 | 593.42 |
| 2CR | 51+86.38 | -12.00 | 592.93 | 593.07 |
| 2CS | 51+96.38 | -12.00 | 592.62 | 592.72 |
| ℄ W BRG PIER 5 WB | 52+08.38 | -12.00 | 592.26 | 592.28 |
| ℄ PIER 5 WB | 52+09.88 | -12.00 | 592.21 | 592.23 |

## GIRDER W6

| Location | Station | Offset | Theoretical Grade Elevations | Theoretical Grade Elevations Adjusted For Dead Load Deflection and Grinding |
|---|---|---|---|---|
| ℄ PIER 2 WB | 42+01.21 | -9.62 | 602.85 | 602.87 |
| ℄ E BRG PIER 2 WB | 42+02.38 | -9.62 | 602.86 | 602.88 |
| 2A | 42+12.38 | -9.62 | 602.96 | 603.04 |
| 2B | 42+22.38 | -9.62 | 603.05 | 603.19 |
| 2C | 42+32.38 | -9.62 | 603.13 | 603.34 |
| 2D | 42+42.38 | -9.62 | 603.21 | 603.48 |
| 2E | 42+52.38 | -9.62 | 603.29 | 603.61 |
| 2F | 42+62.38 | -9.62 | 603.36 | 603.73 |
| 2G | 42+72.38 | -9.62 | 603.43 | 603.84 |
| 2H | 42+82.38 | -9.62 | 603.50 | 603.93 |
| 2I | 42+92.38 | -9.62 | 603.56 | 604.02 |
| 2J | 43+02.38 | -9.62 | 603.62 | 604.10 |
| 2K | 43+12.38 | -9.62 | 603.67 | 604.16 |
| 2L | 43+22.38 | -9.62 | 603.72 | 604.22 |
| 2M | 43+32.38 | -9.62 | 603.76 | 604.26 |
| 2N | 43+42.38 | -9.62 | 603.81 | 604.29 |
| 2O | 43+52.38 | -9.62 | 603.84 | 604.30 |
| 2P | 43+62.38 | -9.62 | 603.88 | 604.31 |
| 2Q | 43+72.38 | -9.62 | 603.90 | 604.31 |
| 2R | 43+82.38 | -9.62 | 603.93 | 604.30 |
| 2S | 43+92.38 | -9.62 | 603.95 | 604.28 |
| 2T | 44+02.38 | -9.62 | 603.97 | 604.25 |
| 2U | 44+12.38 | -9.62 | 603.98 | 604.22 |
| 2V | 44+22.38 | -9.62 | 603.99 | 604.19 |
| 2W | 44+32.38 | -9.62 | 604.00 | 604.15 |
| 2X | 44+42.38 | -9.62 | 604.00 | 604.11 |
| 2Y | 44+52.38 | -9.62 | 604.00 | 604.07 |
| 2Z | 44+62.38 | -9.62 | 603.99 | 604.04 |
| 2AA | 44+72.38 | -9.62 | 603.98 | 604.01 |
| 2AB | 44+82.38 | -9.62 | 603.96 | 603.99 |
| 2AC | 44+92.38 | -9.62 | 603.94 | 603.96 |
| ℄ BRG. PIER 3 WB | 45+02.38 | -9.62 | 603.92 | 603.94 |
| 2AD | 45+12.38 | -9.62 | 603.90 | 603.93 |
| 2AE | 45+22.38 | -9.62 | 603.86 | 603.92 |
| 2AF | 45+32.38 | -9.62 | 603.83 | 603.92 |
| 2AG | 45+42.38 | -9.62 | 603.79 | 603.92 |
| 2AH | 45+52.38 | -9.62 | 603.75 | 603.92 |
| 2AI | 45+62.38 | -9.62 | 603.70 | 603.92 |
| 2AJ | 45+72.38 | -9.62 | 603.65 | 603.93 |
| 2AK | 45+82.38 | -9.62 | 603.60 | 603.93 |
| 2AL | 45+92.38 | -9.62 | 603.54 | 603.93 |
| 2AM | 46+02.38 | -9.62 | 603.48 | 603.93 |
| 2AN | 46+12.38 | -9.62 | 603.41 | 603.92 |
| 2AO | 46+22.38 | -9.62 | 603.34 | 603.91 |
| 2AP | 46+32.38 | -9.62 | 603.26 | 603.88 |
| 2AQ | 46+42.38 | -9.62 | 603.18 | 603.85 |
| 2AR | 46+52.38 | -9.62 | 603.10 | 603.81 |
| 2AS | 46+62.38 | -9.62 | 603.02 | 603.76 |
| 2AT | 46+72.38 | -9.62 | 602.92 | 603.70 |
| 2AU | 46+82.38 | -9.62 | 602.83 | 603.62 |
| 2AV | 46+92.38 | -9.62 | 602.73 | 603.54 |
| 2AW | 47+02.38 | -9.62 | 602.63 | 603.45 |
| 2AX | 47+12.38 | -9.62 | 602.52 | 603.34 |
| 2AY | 47+22.38 | -9.62 | 602.41 | 603.23 |
| 2AZ | 47+32.38 | -9.62 | 602.30 | 603.10 |

### NOTES:

1. All Elevations and Offsets are in feet.
2. Offsets are measured with respect to the I-80 WB PGL. Negative offsets are left and positive are right of the PGL.

# FOR INFORMATION ONLY

WSP USA Inc.
30 N. LASALLE STREET
SUITE 4200
CHICAGO, IL 60602
TEL: (312) 782-8150
FAX: (312) 782-1684

| | | | |
|---|---|---|---|
| USER NAME = USCP702533 | DESIGNED - LAS | REVISED - | |
| | CHECKED - TB | REVISED - | |
| PLOT SCALE = 100.000 ' / in. | DRAWN - GM | REVISED - | |
| PLOT DATE = 10/11/2024 | CHECKED - LAS | REVISED - | |

**STATE OF ILLINOIS**
**DEPARTMENT OF TRANSPORTATION**

**TOP OF SLAB ELEVATIONS - UNIT 2 WB**
**STRUCTURE NUMBER 099-8309 WB AND 099-8325 EB**

SHEET S-28 OF S-87 SHEETS

| F.A.I RTE. | SECTION | COUNTY | TOTAL SHEETS | SHEET NO. |
|---|---|---|---|---|
| I-80 | (99-3DEFP) HF 23 | WILL | 89 | 30 |
| | | CONTRACT NO. 62W52 | | |
| | ILLINOIS | FED. AID PROJECT | | |

MODEL: Default
FILE NAME: pw://transystems-pw.bentley.com:transyscorp-pw1-hosted\Documents\Projects_2018\CH401\401180022\03-WSP\CAD\62W52-SF-3\Sheets\0998309-E2W52-S028-DEW209.dgn

## GIRDER W6 (CONT.)

| Location | Station | Offset | Theoretical Grade Elevations | Theoretical Grade Elevations Adjusted For Dead Load Deflection and Grinding |
|---|---|---|---|---|
| 2BA | 47+42.38 | -9.62 | 602.18 | 602.96 |
| 2BB | 47+52.38 | -9.62 | 602.06 | 602.81 |
| 2BC | 47+62.38 | -9.62 | 601.93 | 602.66 |
| 2BD | 47+72.38 | -9.62 | 601.80 | 602.49 |
| 2BE | 47+82.38 | -9.62 | 601.66 | 602.31 |
| 2BF | 47+92.38 | -9.62 | 601.52 | 602.13 |
| 2BG | 48+02.38 | -9.62 | 601.38 | 601.93 |
| 2BH | 48+12.38 | -9.62 | 601.24 | 601.73 |
| 2BI | 48+22.38 | -9.62 | 601.08 | 601.52 |
| 2BJ | 48+32.38 | -9.62 | 600.93 | 601.30 |
| 2BK | 48+42.38 | -9.62 | 600.77 | 601.08 |
| 2BL | 48+52.38 | -9.62 | 600.61 | 600.86 |
| 2BM | 48+62.38 | -9.62 | 600.44 | 600.64 |
| 2BN | 48+72.38 | -9.62 | 600.27 | 600.42 |
| 2BO | 48+82.38 | -9.62 | 600.10 | 600.21 |
| 2BP | 48+92.38 | -9.62 | 599.92 | 599.99 |
| 2BQ | 49+02.38 | -9.62 | 599.74 | 599.78 |
| ℄ BRG. PIER 4 WB | 49+16.38 | -9.62 | 599.47 | 599.49 |
| 2BR | 49+26.38 | -9.62 | 599.28 | 599.30 |
| 2BS | 49+36.38 | -9.62 | 599.08 | 599.10 |
| 2BT | 49+46.38 | -9.62 | 598.88 | 598.91 |
| 2BU | 49+56.38 | -9.62 | 598.68 | 598.72 |
| 2BV | 49+66.38 | -9.62 | 598.47 | 598.53 |
| 2BW | 49+76.38 | -9.62 | 598.26 | 598.35 |
| 2BX | 49+86.38 | -9.62 | 598.04 | 598.17 |
| 2BY | 49+96.38 | -9.62 | 597.82 | 597.99 |
| 2BZ | 50+06.38 | -9.62 | 597.60 | 597.81 |
| 2CA | 50+16.38 | -9.62 | 597.37 | 597.62 |
| 2CB | 50+26.38 | -9.62 | 597.14 | 597.43 |
| 2CC | 50+36.38 | -9.62 | 596.90 | 597.23 |
| 2CD | 50+46.38 | -9.62 | 596.66 | 597.02 |
| 2CE | 50+56.38 | -9.62 | 596.42 | 596.80 |
| 2CF | 50+66.38 | -9.62 | 596.17 | 596.58 |
| 2CG | 50+76.38 | -9.62 | 595.92 | 596.34 |
| 2CH | 50+86.38 | -9.62 | 595.66 | 596.09 |
| 2CI | 50+96.38 | -9.62 | 595.40 | 595.83 |
| 2CJ | 51+06.38 | -9.62 | 595.14 | 595.56 |
| 2CK | 51+16.38 | -9.62 | 594.87 | 595.28 |
| 2CL | 51+26.38 | -9.62 | 594.60 | 594.99 |
| 2CM | 51+36.38 | -9.62 | 594.32 | 594.69 |
| 2CN | 51+46.38 | -9.62 | 594.04 | 594.37 |
| 2CO | 51+56.38 | -9.62 | 593.75 | 594.05 |
| 2CP | 51+66.38 | -9.62 | 593.47 | 593.72 |
| 2CQ | 51+76.38 | -9.62 | 593.17 | 593.37 |
| 2CR | 51+86.38 | -9.62 | 592.88 | 593.02 |
| 2CS | 51+96.38 | -9.62 | 592.58 | 592.67 |
| ℄ W BRG PIER 5 WB | 52+08.38 | -9.62 | 592.21 | 592.23 |
| ℄ PIER 5 WB | 52+09.88 | -9.62 | 592.17 | 592.19 |

## GIRDER W7

| Location | Station | Offset | Theoretical Grade Elevations | Theoretical Grade Elevations Adjusted For Dead Load Deflection and Grinding |
|---|---|---|---|---|
| ℄ PIER 2 WB | 42+01.21 | -0.04 | 602.66 | 602.68 |
| ℄ E BRG PIER 2 WB | 42+02.38 | -0.04 | 602.67 | 602.69 |
| 2A | 42+12.38 | -0.04 | 602.76 | 602.85 |
| 2B | 42+22.38 | -0.04 | 602.85 | 603.00 |
| 2C | 42+32.38 | -0.04 | 602.94 | 603.15 |
| 2D | 42+42.38 | -0.04 | 603.02 | 603.29 |
| 2E | 42+52.38 | -0.04 | 603.10 | 603.42 |
| 2F | 42+62.38 | -0.04 | 603.17 | 603.54 |
| 2G | 42+72.38 | -0.04 | 603.24 | 603.65 |
| 2H | 42+82.38 | -0.04 | 603.31 | 603.74 |
| 2I | 42+92.38 | -0.04 | 603.37 | 603.83 |
| 2J | 43+02.38 | -0.04 | 603.42 | 603.91 |
| 2K | 43+12.38 | -0.04 | 603.48 | 603.97 |
| 2L | 43+22.38 | -0.04 | 603.53 | 604.02 |
| 2M | 43+32.38 | -0.04 | 603.57 | 604.06 |
| 2N | 43+42.38 | -0.04 | 603.61 | 604.09 |
| 2O | 43+52.38 | -0.04 | 603.65 | 604.11 |
| 2P | 43+62.38 | -0.04 | 603.68 | 604.12 |
| 2Q | 43+72.38 | -0.04 | 603.71 | 604.12 |
| 2R | 43+82.38 | -0.04 | 603.74 | 604.11 |
| 2S | 43+92.38 | -0.04 | 603.76 | 604.09 |
| 2T | 44+02.38 | -0.04 | 603.78 | 604.06 |
| 2U | 44+12.38 | -0.04 | 603.79 | 604.03 |
| 2V | 44+22.38 | -0.04 | 603.80 | 603.99 |
| 2W | 44+32.38 | -0.04 | 603.81 | 603.96 |
| 2X | 44+42.38 | -0.04 | 603.81 | 603.92 |
| 2Y | 44+52.38 | -0.04 | 603.80 | 603.88 |
| 2Z | 44+62.38 | -0.04 | 603.80 | 603.85 |
| 2AA | 44+72.38 | -0.04 | 603.79 | 603.82 |
| 2AB | 44+82.38 | -0.04 | 603.77 | 603.79 |
| 2AC | 44+92.38 | -0.04 | 603.75 | 603.77 |
| ℄ BRG. PIER 3 WB | 45+02.38 | -0.04 | 603.73 | 603.75 |
| 2AD | 45+12.38 | -0.04 | 603.70 | 603.74 |
| 2AE | 45+22.38 | -0.04 | 603.67 | 603.73 |
| 2AF | 45+32.38 | -0.04 | 603.64 | 603.73 |
| 2AG | 45+42.38 | -0.04 | 603.60 | 603.73 |
| 2AH | 45+52.38 | -0.04 | 603.56 | 603.73 |
| 2AI | 45+62.38 | -0.04 | 603.51 | 603.73 |
| 2AJ | 45+72.38 | -0.04 | 603.46 | 603.74 |
| 2AK | 45+82.38 | -0.04 | 603.40 | 603.74 |
| 2AL | 45+92.38 | -0.04 | 603.35 | 603.74 |
| 2AM | 46+02.38 | -0.04 | 603.28 | 603.74 |
| 2AN | 46+12.38 | -0.04 | 603.22 | 603.73 |
| 2AO | 46+22.38 | -0.04 | 603.15 | 603.72 |
| 2AP | 46+32.38 | -0.04 | 603.07 | 603.69 |
| 2AQ | 46+42.38 | -0.04 | 602.99 | 603.66 |
| 2AR | 46+52.38 | -0.04 | 602.91 | 603.62 |
| 2AS | 46+62.38 | -0.04 | 602.82 | 603.57 |
| 2AT | 46+72.38 | -0.04 | 602.73 | 603.50 |
| 2AU | 46+82.38 | -0.04 | 602.64 | 603.43 |
| 2AV | 46+92.38 | -0.04 | 602.54 | 603.35 |
| 2AW | 47+02.38 | -0.04 | 602.44 | 603.25 |
| 2AX | 47+12.38 | -0.04 | 602.33 | 603.15 |
| 2AY | 47+22.38 | -0.04 | 602.22 | 603.04 |
| 2AZ | 47+32.38 | -0.04 | 602.10 | 602.91 |

## GIRDER W7 (CONT.)

| Location | Station | Offset | Theoretical Grade Elevations | Theoretical Grade Elevations Adjusted For Dead Load Deflection and Grinding |
|---|---|---|---|---|
| 2BA | 47+42.38 | -0.04 | 601.99 | 602.77 |
| 2BB | 47+52.38 | -0.04 | 601.86 | 602.62 |
| 2BC | 47+62.38 | -0.04 | 601.74 | 602.47 |
| 2BD | 47+72.38 | -0.04 | 601.61 | 602.30 |
| 2BE | 47+82.38 | -0.04 | 601.47 | 602.12 |
| 2BF | 47+92.38 | -0.04 | 601.33 | 601.93 |
| 2BG | 48+02.38 | -0.04 | 601.19 | 601.74 |
| 2BH | 48+12.38 | -0.04 | 601.04 | 601.54 |
| 2BI | 48+22.38 | -0.04 | 600.89 | 601.33 |
| 2BJ | 48+32.38 | -0.04 | 600.74 | 601.11 |
| 2BK | 48+42.38 | -0.04 | 600.58 | 600.89 |
| 2BL | 48+52.38 | -0.04 | 600.42 | 600.67 |
| 2BM | 48+62.38 | -0.04 | 600.25 | 600.45 |
| 2BN | 48+72.38 | -0.04 | 600.08 | 600.23 |
| 2BO | 48+82.38 | -0.04 | 599.90 | 600.02 |
| 2BP | 48+92.38 | -0.04 | 599.73 | 599.80 |
| 2BQ | 49+02.38 | -0.04 | 599.54 | 599.59 |
| ℄ BRG. PIER 4 WB | 49+16.38 | -0.04 | 599.28 | 599.30 |
| 2BR | 49+26.38 | -0.04 | 599.09 | 599.10 |
| 2BS | 49+36.38 | -0.04 | 598.89 | 598.91 |
| 2BT | 49+46.38 | -0.04 | 598.69 | 598.72 |
| 2BU | 49+56.38 | -0.04 | 598.49 | 598.53 |
| 2BV | 49+66.38 | -0.04 | 598.28 | 598.34 |
| 2BW | 49+76.38 | -0.04 | 598.07 | 598.16 |
| 2BX | 49+86.38 | -0.04 | 597.85 | 597.98 |
| 2BY | 49+96.38 | -0.04 | 597.63 | 597.80 |
| 2BZ | 50+06.38 | -0.04 | 597.41 | 597.61 |
| 2CA | 50+16.38 | -0.04 | 597.18 | 597.43 |
| 2CB | 50+26.38 | -0.04 | 596.95 | 597.23 |
| 2CC | 50+36.38 | -0.04 | 596.71 | 597.04 |
| 2CD | 50+46.38 | -0.04 | 596.47 | 596.83 |
| 2CE | 50+56.38 | -0.04 | 596.23 | 596.61 |
| 2CF | 50+66.38 | -0.04 | 595.98 | 596.38 |
| 2CG | 50+76.38 | -0.04 | 595.72 | 596.15 |
| 2CH | 50+86.38 | -0.04 | 595.47 | 595.90 |
| 2CI | 50+96.38 | -0.04 | 595.21 | 595.64 |
| 2CJ | 51+06.38 | -0.04 | 594.94 | 595.37 |
| 2CK | 51+16.38 | -0.04 | 594.68 | 595.09 |
| 2CL | 51+26.38 | -0.04 | 594.40 | 594.80 |
| 2CM | 51+36.38 | -0.04 | 594.13 | 594.49 |
| 2CN | 51+46.38 | -0.04 | 593.85 | 594.18 |
| 2CO | 51+56.38 | -0.04 | 593.56 | 593.86 |
| 2CP | 51+66.38 | -0.04 | 593.27 | 593.53 |
| 2CQ | 51+76.38 | -0.04 | 592.98 | 593.18 |
| 2CR | 51+86.38 | -0.04 | 592.69 | 592.83 |
| 2CS | 51+96.38 | -0.04 | 592.39 | 592.48 |
| ℄ W BRG PIER 5 WB | 52+08.38 | -0.04 | 592.02 | 592.04 |
| ℄ PIER 5 WB | 52+09.88 | -0.04 | 591.97 | 591.99 |

### NOTES:

1. All Elevations and Offsets are in feet.
2. Offsets are measured with respect to the I-80 WB PGL. Negative offsets are left and positive are right of the PGL.

# FOR INFORMATION ONLY

WSP USA Inc.
30 N. LASALLE STREET
SUITE 4200
CHICAGO, IL 60602
TEL: (312) 782-8150
FAX: (312) 782-1684

| | | | |
|---|---|---|---|
| USER NAME = USCP702533 | DESIGNED - LAS | REVISED - | |
| | CHECKED - TB | REVISED - | |
| PLOT SCALE = 100.000 ' / in. | DRAWN - GM | REVISED - | |
| PLOT DATE = 10/11/2024 | CHECKED - LAS | REVISED - | |

**STATE OF ILLINOIS**
**DEPARTMENT OF TRANSPORTATION**

**TOP OF SLAB ELEVATIONS - UNIT 2 WB**
**STRUCTURE NUMBER 099-8309 WB AND 099-8325 EB**

SHEET S-29 OF S-87 SHEETS

| F.A.I RTE. | SECTION | COUNTY | TOTAL SHEETS | SHEET NO. |
|---|---|---|---|---|
| I-80 | (99-3DEFP) HF 23 | WILL | 89 | 31 |
| | | CONTRACT NO. 62W52 | | |
| | ILLINOIS | FED. AID PROJECT | | |

MODEL: Default
FILE NAME: pw://transystems-pw.bentley.com:transyscorp-pw1-hosted/Documents/Projects_2018/CH401/401180022/03-WSP/CAD/62W52-SF-3/Sheets/0998309-82W52-S029-DEW210.dgn

## PGL I-80 WB

| Location | Station | Offset | Theoretical Grade Elevations | Theoretical Grade Elevations Adjusted For Dead Load Deflection and Grinding |
|---|---|---|---|---|
| ℄ PIER 2 WB | 42+01.21 | 0.00 | 602.66 | 602.68 |
| ℄ E BRG PIER 2 WB | 42+02.38 | 0.00 | 602.67 | 602.69 |
| 2A | 42+12.38 | 0.00 | 602.76 | 602.85 |
| 2B | 42+22.38 | 0.00 | 602.85 | 603.00 |
| 2C | 42+32.38 | 0.00 | 602.94 | 603.15 |
| 2D | 42+42.38 | 0.00 | 603.02 | 603.29 |
| 2E | 42+52.38 | 0.00 | 603.10 | 603.42 |
| 2F | 42+62.38 | 0.00 | 603.17 | 603.54 |
| 2G | 42+72.38 | 0.00 | 603.24 | 603.64 |
| 2H | 42+82.38 | 0.00 | 603.30 | 603.74 |
| 2I | 42+92.38 | 0.00 | 603.37 | 603.83 |
| 2J | 43+02.38 | 0.00 | 603.42 | 603.90 |
| 2K | 43+12.38 | 0.00 | 603.48 | 603.97 |
| 2L | 43+22.38 | 0.00 | 603.53 | 604.02 |
| 2M | 43+32.38 | 0.00 | 603.57 | 604.06 |
| 2N | 43+42.38 | 0.00 | 603.61 | 604.09 |
| 2O | 43+52.38 | 0.00 | 603.65 | 604.11 |
| 2P | 43+62.38 | 0.00 | 603.68 | 604.12 |
| 2Q | 43+72.38 | 0.00 | 603.71 | 604.12 |
| 2R | 43+82.38 | 0.00 | 603.74 | 604.11 |
| 2S | 43+92.38 | 0.00 | 603.76 | 604.09 |
| 2T | 44+02.38 | 0.00 | 603.78 | 604.06 |
| 2U | 44+12.38 | 0.00 | 603.79 | 604.03 |
| 2V | 44+22.38 | 0.00 | 603.80 | 603.99 |
| 2W | 44+32.38 | 0.00 | 603.80 | 603.95 |
| 2X | 44+42.38 | 0.00 | 603.81 | 603.92 |
| 2Y | 44+52.38 | 0.00 | 603.80 | 603.88 |
| 2Z | 44+62.38 | 0.00 | 603.80 | 603.85 |
| 2AA | 44+72.38 | 0.00 | 603.79 | 603.82 |
| 2AB | 44+82.38 | 0.00 | 603.77 | 603.79 |
| 2AC | 44+92.38 | 0.00 | 603.75 | 603.77 |
| ℄ BRG. PIER 3 WB | 45+02.38 | 0.00 | 603.73 | 603.75 |
| 2AD | 45+12.38 | 0.00 | 603.70 | 603.74 |
| 2AE | 45+22.38 | 0.00 | 603.67 | 603.73 |
| 2AF | 45+32.38 | 0.00 | 603.64 | 603.73 |
| 2AG | 45+42.38 | 0.00 | 603.60 | 603.73 |
| 2AH | 45+52.38 | 0.00 | 603.56 | 603.73 |
| 2AI | 45+62.38 | 0.00 | 603.51 | 603.73 |
| 2AJ | 45+72.38 | 0.00 | 603.46 | 603.74 |
| 2AK | 45+82.38 | 0.00 | 603.40 | 603.74 |
| 2AL | 45+92.38 | 0.00 | 603.35 | 603.74 |
| 2AM | 46+02.38 | 0.00 | 603.28 | 603.74 |
| 2AN | 46+12.38 | 0.00 | 603.22 | 603.73 |
| 2AO | 46+22.38 | 0.00 | 603.15 | 603.72 |
| 2AP | 46+32.38 | 0.00 | 603.07 | 603.69 |
| 2AQ | 46+42.38 | 0.00 | 602.99 | 603.66 |
| 2AR | 46+52.38 | 0.00 | 602.91 | 603.62 |
| 2AS | 46+62.38 | 0.00 | 602.82 | 603.56 |
| 2AT | 46+72.38 | 0.00 | 602.73 | 603.50 |
| 2AU | 46+82.38 | 0.00 | 602.64 | 603.43 |
| 2AV | 46+92.38 | 0.00 | 602.54 | 603.35 |
| 2AW | 47+02.38 | 0.00 | 602.44 | 603.25 |
| 2AX | 47+12.38 | 0.00 | 602.33 | 603.15 |
| 2AY | 47+22.38 | 0.00 | 602.22 | 603.03 |
| 2AZ | 47+32.38 | 0.00 | 602.10 | 602.91 |

## PGL I-80 WB (CONT.)

| Location | Station | Offset | Theoretical Grade Elevations | Theoretical Grade Elevations Adjusted For Dead Load Deflection and Grinding |
|---|---|---|---|---|
| 2BA | 47+42.38 | 0.00 | 601.99 | 602.77 |
| 2BB | 47+52.38 | 0.00 | 601.86 | 602.62 |
| 2BC | 47+62.38 | 0.00 | 601.74 | 602.47 |
| 2BD | 47+72.38 | 0.00 | 601.61 | 602.30 |
| 2BE | 47+82.38 | 0.00 | 601.47 | 602.12 |
| 2BF | 47+92.38 | 0.00 | 601.33 | 601.93 |
| 2BG | 48+02.38 | 0.00 | 601.19 | 601.74 |
| 2BH | 48+12.38 | 0.00 | 601.04 | 601.53 |
| 2BI | 48+22.38 | 0.00 | 600.89 | 601.32 |
| 2BJ | 48+32.38 | 0.00 | 600.74 | 601.11 |
| 2BK | 48+42.38 | 0.00 | 600.58 | 600.89 |
| 2BL | 48+52.38 | 0.00 | 600.42 | 600.67 |
| 2BM | 48+62.38 | 0.00 | 600.25 | 600.45 |
| 2BN | 48+72.38 | 0.00 | 600.08 | 600.23 |
| 2BO | 48+82.38 | 0.00 | 599.90 | 600.01 |
| 2BP | 48+92.38 | 0.00 | 599.73 | 599.80 |
| 2BQ | 49+02.38 | 0.00 | 599.54 | 599.59 |
| ℄ BRG. PIER 4 WB | 49+16.38 | 0.00 | 599.28 | 599.30 |
| 2BR | 49+26.38 | 0.00 | 599.09 | 599.10 |
| 2BS | 49+36.38 | 0.00 | 598.89 | 598.91 |
| 2BT | 49+46.38 | 0.00 | 598.69 | 598.72 |
| 2BU | 49+56.38 | 0.00 | 598.49 | 598.53 |
| 2BV | 49+66.38 | 0.00 | 598.28 | 598.34 |
| 2BW | 49+76.38 | 0.00 | 598.07 | 598.16 |
| 2BX | 49+86.38 | 0.00 | 597.85 | 597.98 |
| 2BY | 49+96.38 | 0.00 | 597.63 | 597.80 |
| 2BZ | 50+06.38 | 0.00 | 597.41 | 597.61 |
| 2CA | 50+16.38 | 0.00 | 597.18 | 597.43 |
| 2CB | 50+26.38 | 0.00 | 596.95 | 597.23 |
| 2CC | 50+36.38 | 0.00 | 596.71 | 597.03 |
| 2CD | 50+46.38 | 0.00 | 596.47 | 596.83 |
| 2CE | 50+56.38 | 0.00 | 596.22 | 596.61 |
| 2CF | 50+66.38 | 0.00 | 595.98 | 596.38 |
| 2CG | 50+76.38 | 0.00 | 595.72 | 596.15 |
| 2CH | 50+86.38 | 0.00 | 595.47 | 595.90 |
| 2CI | 50+96.38 | 0.00 | 595.21 | 595.64 |
| 2CJ | 51+06.38 | 0.00 | 594.94 | 595.37 |
| 2CK | 51+16.38 | 0.00 | 594.67 | 595.09 |
| 2CL | 51+26.38 | 0.00 | 594.40 | 594.80 |
| 2CM | 51+36.38 | 0.00 | 594.13 | 594.49 |
| 2CN | 51+46.38 | 0.00 | 593.85 | 594.18 |
| 2CO | 51+56.38 | 0.00 | 593.56 | 593.86 |
| 2CP | 51+66.38 | 0.00 | 593.27 | 593.52 |
| 2CQ | 51+76.38 | 0.00 | 592.98 | 593.18 |
| 2CR | 51+86.38 | 0.00 | 592.69 | 592.83 |
| 2CS | 51+96.38 | 0.00 | 592.38 | 592.48 |
| ℄ W BRG PIER 5 WB | 52+08.38 | 0.00 | 592.02 | 592.04 |
| ℄ PIER 5 WB | 52+09.88 | 0.00 | 591.97 | 591.99 |

## GIRDER W8

| Location | Station | Offset | Theoretical Grade Elevations | Theoretical Grade Elevations Adjusted For Dead Load Deflection and Grinding |
|---|---|---|---|---|
| ℄ PIER 2 WB | 42+01.21 | 9.54 | 602.47 | 602.49 |
| ℄ E BRG PIER 2 WB | 42+02.38 | 9.54 | 602.48 | 602.50 |
| 2A | 42+12.38 | 9.54 | 602.57 | 602.66 |
| 2B | 42+22.38 | 9.54 | 602.66 | 602.81 |
| 2C | 42+32.38 | 9.54 | 602.75 | 602.96 |
| 2D | 42+42.38 | 9.54 | 602.83 | 603.10 |
| 2E | 42+52.38 | 9.54 | 602.91 | 603.22 |
| 2F | 42+62.38 | 9.54 | 602.98 | 603.34 |
| 2G | 42+72.38 | 9.54 | 603.05 | 603.45 |
| 2H | 42+82.38 | 9.54 | 603.11 | 603.55 |
| 2I | 42+92.38 | 9.54 | 603.18 | 603.64 |
| 2J | 43+02.38 | 9.54 | 603.23 | 603.71 |
| 2K | 43+12.38 | 9.54 | 603.29 | 603.78 |
| 2L | 43+22.38 | 9.54 | 603.34 | 603.83 |
| 2M | 43+32.38 | 9.54 | 603.38 | 603.87 |
| 2N | 43+42.38 | 9.54 | 603.42 | 603.90 |
| 2O | 43+52.38 | 9.54 | 603.46 | 603.92 |
| 2P | 43+62.38 | 9.54 | 603.49 | 603.93 |
| 2Q | 43+72.38 | 9.54 | 603.52 | 603.93 |
| 2R | 43+82.38 | 9.54 | 603.55 | 603.92 |
| 2S | 43+92.38 | 9.54 | 603.57 | 603.90 |
| 2T | 44+02.38 | 9.54 | 603.59 | 603.87 |
| 2U | 44+12.38 | 9.54 | 603.60 | 603.84 |
| 2V | 44+22.38 | 9.54 | 603.61 | 603.80 |
| 2W | 44+32.38 | 9.54 | 603.61 | 603.76 |
| 2X | 44+42.38 | 9.54 | 603.61 | 603.73 |
| 2Y | 44+52.38 | 9.54 | 603.61 | 603.69 |
| 2Z | 44+62.38 | 9.54 | 603.61 | 603.66 |
| 2AA | 44+72.38 | 9.54 | 603.59 | 603.63 |
| 2AB | 44+82.38 | 9.54 | 603.58 | 603.60 |
| 2AC | 44+92.38 | 9.54 | 603.56 | 603.58 |
| ℄ BRG. PIER 3 WB | 45+02.38 | 9.54 | 603.54 | 603.56 |
| 2AD | 45+12.38 | 9.54 | 603.51 | 603.55 |
| 2AE | 45+22.38 | 9.54 | 603.48 | 603.54 |
| 2AF | 45+32.38 | 9.54 | 603.45 | 603.54 |
| 2AG | 45+42.38 | 9.54 | 603.41 | 603.53 |
| 2AH | 45+52.38 | 9.54 | 603.37 | 603.54 |
| 2AI | 45+62.38 | 9.54 | 603.32 | 603.54 |
| 2AJ | 45+72.38 | 9.54 | 603.27 | 603.55 |
| 2AK | 45+82.38 | 9.54 | 603.21 | 603.55 |
| 2AL | 45+92.38 | 9.54 | 603.15 | 603.55 |
| 2AM | 46+02.38 | 9.54 | 603.09 | 603.55 |
| 2AN | 46+12.38 | 9.54 | 603.03 | 603.54 |
| 2AO | 46+22.38 | 9.54 | 602.95 | 603.53 |
| 2AP | 46+32.38 | 9.54 | 602.88 | 603.50 |
| 2AQ | 46+42.38 | 9.54 | 602.80 | 603.47 |
| 2AR | 46+52.38 | 9.54 | 602.72 | 603.43 |
| 2AS | 46+62.38 | 9.54 | 602.63 | 603.37 |
| 2AT | 46+72.38 | 9.54 | 602.54 | 603.31 |
| 2AU | 46+82.38 | 9.54 | 602.45 | 603.24 |
| 2AV | 46+92.38 | 9.54 | 602.35 | 603.16 |
| 2AW | 47+02.38 | 9.54 | 602.25 | 603.06 |
| 2AX | 47+12.38 | 9.54 | 602.14 | 602.96 |
| 2AY | 47+22.38 | 9.54 | 602.03 | 602.84 |
| 2AZ | 47+32.38 | 9.54 | 601.91 | 602.72 |

### NOTES:

1. All Elevations and Offsets are in feet.
2. Offsets are measured with respect to the I-80 WB PGL. Negative offsets are left and positive are right of the PGL.

# FOR INFORMATION ONLY

WSP USA Inc.
30 N. LASALLE STREET
SUITE 4200
CHICAGO, IL 60602
TEL: (312) 782-8150
FAX: (312) 782-1684

| | | | |
|---|---|---|---|
| USER NAME = USCP702533 | DESIGNED - LAS | REVISED - | |
| | CHECKED - TB | REVISED - | |
| PLOT SCALE = 100.000 ' / in. | DRAWN - GM | REVISED - | |
| PLOT DATE = 10/11/2024 | CHECKED - LAS | REVISED - | |

**STATE OF ILLINOIS**
**DEPARTMENT OF TRANSPORTATION**

**TOP OF SLAB ELEVATIONS - UNIT 2 WB**
**STRUCTURE NUMBER 099-8309 WB AND 099-8325 EB**

SHEET S-30 OF S-87 SHEETS

| F.A.I RTE. | SECTION | COUNTY | TOTAL SHEETS | SHEET NO. |
|---|---|---|---|---|
| I-80 | (99-3DEFP) HF 23 | WILL | 89 | 32 |
| | | CONTRACT NO. 62W52 | | |
| | ILLINOIS | FED. AID PROJECT | | |

MODEL: Default
FILE NAME: pw://transystems-pw.bentley.com:transyscorp-pw1-hosted/Documents/Projects_2018/CH401/401180022/03-WSP/CAD/62W52-SF-3/Sheets/0998309-82W52-S030-DEW211.dgn

## GIRDER W8 (CONT.)

| Location | Station | Offset | Theoretical Grade Elevations | Theoretical Grade Elevations Adjusted For Dead Load Deflection and Grinding |
|---|---|---|---|---|
| 2BA | 47+42.38 | 9.54 | 601.79 | 602.58 |
| 2BB | 47+52.38 | 9.54 | 601.67 | 602.43 |
| 2BC | 47+62.38 | 9.54 | 601.55 | 602.27 |
| 2BD | 47+72.38 | 9.54 | 601.41 | 602.11 |
| 2BE | 47+82.38 | 9.54 | 601.28 | 601.93 |
| 2BF | 47+92.38 | 9.54 | 601.14 | 601.74 |
| 2BG | 48+02.38 | 9.54 | 601.00 | 601.55 |
| 2BH | 48+12.38 | 9.54 | 600.85 | 601.34 |
| 2BI | 48+22.38 | 9.54 | 600.70 | 601.13 |
| 2BJ | 48+32.38 | 9.54 | 600.55 | 600.92 |
| 2BK | 48+42.38 | 9.54 | 600.39 | 600.70 |
| 2BL | 48+52.38 | 9.54 | 600.23 | 600.48 |
| 2BM | 48+62.38 | 9.54 | 600.06 | 600.26 |
| 2BN | 48+72.38 | 9.54 | 599.89 | 600.04 |
| 2BO | 48+82.38 | 9.54 | 599.71 | 599.82 |
| 2BP | 48+92.38 | 9.54 | 599.53 | 599.61 |
| 2BQ | 49+02.38 | 9.54 | 599.35 | 599.40 |
| ℄ BRG. PIER 4 WB | 49+16.38 | 9.54 | 599.09 | 599.11 |
| 2BR | 49+26.38 | 9.54 | 598.90 | 598.91 |
| 2BS | 49+36.38 | 9.54 | 598.70 | 598.72 |
| 2BT | 49+46.38 | 9.54 | 598.50 | 598.52 |
| 2BU | 49+56.38 | 9.54 | 598.30 | 598.34 |
| 2BV | 49+66.38 | 9.54 | 598.09 | 598.15 |
| 2BW | 49+76.38 | 9.54 | 597.88 | 597.97 |
| 2BX | 49+86.38 | 9.54 | 597.66 | 597.79 |
| 2BY | 49+96.38 | 9.54 | 597.44 | 597.61 |
| 2BZ | 50+06.38 | 9.54 | 597.21 | 597.42 |
| 2CA | 50+16.38 | 9.54 | 596.99 | 597.24 |
| 2CB | 50+26.38 | 9.54 | 596.75 | 597.04 |
| 2CC | 50+36.38 | 9.54 | 596.52 | 596.84 |
| 2CD | 50+46.38 | 9.54 | 596.28 | 596.64 |
| 2CE | 50+56.38 | 9.54 | 596.03 | 596.42 |
| 2CF | 50+66.38 | 9.54 | 595.79 | 596.19 |
| 2CG | 50+76.38 | 9.54 | 595.53 | 595.95 |
| 2CH | 50+86.38 | 9.54 | 595.28 | 595.71 |
| 2CI | 50+96.38 | 9.54 | 595.02 | 595.45 |
| 2CJ | 51+06.38 | 9.54 | 594.75 | 595.18 |
| 2CK | 51+16.38 | 9.54 | 594.48 | 594.90 |
| 2CL | 51+26.38 | 9.54 | 594.21 | 594.61 |
| 2CM | 51+36.38 | 9.54 | 593.94 | 594.30 |
| 2CN | 51+46.38 | 9.54 | 593.66 | 593.99 |
| 2CO | 51+56.38 | 9.54 | 593.37 | 593.67 |
| 2CP | 51+66.38 | 9.54 | 593.08 | 593.33 |
| 2CQ | 51+76.38 | 9.54 | 592.79 | 592.99 |
| 2CR | 51+86.38 | 9.54 | 592.49 | 592.64 |
| 2CS | 51+96.38 | 9.54 | 592.19 | 592.29 |
| ℄ W BRG PIER 5 WB | 52+08.38 | 9.54 | 591.83 | 591.85 |
| ℄ PIER 5 WB | 52+09.88 | 9.54 | 591.78 | 591.80 |

## INSIDE FACE OF SOUTH PARAPET - WB

| Location | Station | Offset | Theoretical Grade Elevations | Theoretical Grade Elevations Adjusted For Dead Load Deflection and Grinding |
|---|---|---|---|---|
| ℄ PIER 2 WB | 42+01.21 | 12.00 | 602.42 | 602.44 |
| ℄ E BRG PIER 2 WB | 42+02.38 | 12.00 | 602.43 | 602.45 |
| 2A | 42+12.38 | 12.00 | 602.52 | 602.61 |
| 2B | 42+22.38 | 12.00 | 602.61 | 602.76 |
| 2C | 42+32.38 | 12.00 | 602.70 | 602.91 |
| 2D | 42+42.38 | 12.00 | 602.78 | 603.05 |
| 2E | 42+52.38 | 12.00 | 602.86 | 603.18 |
| 2F | 42+62.38 | 12.00 | 602.93 | 603.30 |
| 2G | 42+72.38 | 12.00 | 603.00 | 603.40 |
| 2H | 42+82.38 | 12.00 | 603.06 | 603.50 |
| 2I | 42+92.38 | 12.00 | 603.13 | 603.59 |
| 2J | 43+02.38 | 12.00 | 603.18 | 603.66 |
| 2K | 43+12.38 | 12.00 | 603.24 | 603.73 |
| 2L | 43+22.38 | 12.00 | 603.29 | 603.78 |
| 2M | 43+32.38 | 12.00 | 603.33 | 603.82 |
| 2N | 43+42.38 | 12.00 | 603.37 | 603.85 |
| 2O | 43+52.38 | 12.00 | 603.41 | 603.87 |
| 2P | 43+62.38 | 12.00 | 603.44 | 603.88 |
| 2Q | 43+72.38 | 12.00 | 603.47 | 603.88 |
| 2R | 43+82.38 | 12.00 | 603.50 | 603.87 |
| 2S | 43+92.38 | 12.00 | 603.52 | 603.85 |
| 2T | 44+02.38 | 12.00 | 603.54 | 603.82 |
| 2U | 44+12.38 | 12.00 | 603.55 | 603.79 |
| 2V | 44+22.38 | 12.00 | 603.56 | 603.75 |
| 2W | 44+32.38 | 12.00 | 603.56 | 603.71 |
| 2X | 44+42.38 | 12.00 | 603.57 | 603.68 |
| 2Y | 44+52.38 | 12.00 | 603.56 | 603.64 |
| 2Z | 44+62.38 | 12.00 | 603.56 | 603.61 |
| 2AA | 44+72.38 | 12.00 | 603.55 | 603.58 |
| 2AB | 44+82.38 | 12.00 | 603.53 | 603.55 |
| 2AC | 44+92.38 | 12.00 | 603.51 | 603.53 |
| ℄ BRG. PIER 3 WB | 45+02.38 | 12.00 | 603.49 | 603.51 |
| 2AD | 45+12.38 | 12.00 | 603.46 | 603.50 |
| 2AE | 45+22.38 | 12.00 | 603.43 | 603.49 |
| 2AF | 45+32.38 | 12.00 | 603.40 | 603.49 |
| 2AG | 45+42.38 | 12.00 | 603.36 | 603.49 |
| 2AH | 45+52.38 | 12.00 | 603.32 | 603.49 |
| 2AI | 45+62.38 | 12.00 | 603.27 | 603.49 |
| 2AJ | 45+72.38 | 12.00 | 603.22 | 603.50 |
| 2AK | 45+82.38 | 12.00 | 603.16 | 603.50 |
| 2AL | 45+92.38 | 12.00 | 603.11 | 603.50 |
| 2AM | 46+02.38 | 12.00 | 603.04 | 603.50 |
| 2AN | 46+12.38 | 12.00 | 602.98 | 603.49 |
| 2AO | 46+22.38 | 12.00 | 602.91 | 603.48 |
| 2AP | 46+32.38 | 12.00 | 602.83 | 603.45 |
| 2AQ | 46+42.38 | 12.00 | 602.75 | 603.42 |
| 2AR | 46+52.38 | 12.00 | 602.67 | 603.38 |
| 2AS | 46+62.38 | 12.00 | 602.58 | 603.32 |
| 2AT | 46+72.38 | 12.00 | 602.49 | 603.26 |
| 2AU | 46+82.38 | 12.00 | 602.40 | 603.19 |
| 2AV | 46+92.38 | 12.00 | 602.30 | 603.11 |
| 2AW | 47+02.38 | 12.00 | 602.20 | 603.01 |
| 2AX | 47+12.38 | 12.00 | 602.09 | 602.91 |
| 2AY | 47+22.38 | 12.00 | 601.98 | 602.79 |
| 2AZ | 47+32.38 | 12.00 | 601.86 | 602.67 |

## INSIDE FACE OF SOUTH PARAPET - WB (CONT.)

| Location | Station | Offset | Theoretical Grade Elevations | Theoretical Grade Elevations Adjusted For Dead Load Deflection and Grinding |
|---|---|---|---|---|
| 2BA | 47+42.38 | 12.00 | 601.75 | 602.53 |
| 2BB | 47+52.38 | 12.00 | 601.62 | 602.38 |
| 2BC | 47+62.38 | 12.00 | 601.50 | 602.23 |
| 2BD | 47+72.38 | 12.00 | 601.37 | 602.06 |
| 2BE | 47+82.38 | 12.00 | 601.23 | 601.88 |
| 2BF | 47+92.38 | 12.00 | 601.09 | 601.69 |
| 2BG | 48+02.38 | 12.00 | 600.95 | 601.50 |
| 2BH | 48+12.38 | 12.00 | 600.80 | 601.29 |
| 2BI | 48+22.38 | 12.00 | 600.65 | 601.08 |
| 2BJ | 48+32.38 | 12.00 | 600.50 | 600.87 |
| 2BK | 48+42.38 | 12.00 | 600.34 | 600.65 |
| 2BL | 48+52.38 | 12.00 | 600.18 | 600.43 |
| 2BM | 48+62.38 | 12.00 | 600.01 | 600.21 |
| 2BN | 48+72.38 | 12.00 | 599.84 | 599.99 |
| 2BO | 48+82.38 | 12.00 | 599.66 | 599.77 |
| 2BP | 48+92.38 | 12.00 | 599.49 | 599.56 |
| 2BQ | 49+02.38 | 12.00 | 599.30 | 599.35 |
| ℄ BRG. PIER 4 WB | 49+16.38 | 12.00 | 599.04 | 599.06 |
| 2BR | 49+26.38 | 12.00 | 598.85 | 598.86 |
| 2BS | 49+36.38 | 12.00 | 598.65 | 598.67 |
| 2BT | 49+46.38 | 12.00 | 598.45 | 598.48 |
| 2BU | 49+56.38 | 12.00 | 598.25 | 598.29 |
| 2BV | 49+66.38 | 12.00 | 598.04 | 598.10 |
| 2BW | 49+76.38 | 12.00 | 597.83 | 597.92 |
| 2BX | 49+86.38 | 12.00 | 597.61 | 597.74 |
| 2BY | 49+96.38 | 12.00 | 597.39 | 597.56 |
| 2BZ | 50+06.38 | 12.00 | 597.17 | 597.37 |
| 2CA | 50+16.38 | 12.00 | 596.94 | 597.19 |
| 2CB | 50+26.38 | 12.00 | 596.71 | 596.99 |
| 2CC | 50+36.38 | 12.00 | 596.47 | 596.79 |
| 2CD | 50+46.38 | 12.00 | 596.23 | 596.59 |
| 2CE | 50+56.38 | 12.00 | 595.98 | 596.37 |
| 2CF | 50+66.38 | 12.00 | 595.74 | 596.14 |
| 2CG | 50+76.38 | 12.00 | 595.48 | 595.91 |
| 2CH | 50+86.38 | 12.00 | 595.23 | 595.66 |
| 2CI | 50+96.38 | 12.00 | 594.97 | 595.40 |
| 2CJ | 51+06.38 | 12.00 | 594.70 | 595.13 |
| 2CK | 51+16.38 | 12.00 | 594.43 | 594.85 |
| 2CL | 51+26.38 | 12.00 | 594.16 | 594.56 |
| 2CM | 51+36.38 | 12.00 | 593.89 | 594.25 |
| 2CN | 51+46.38 | 12.00 | 593.61 | 593.94 |
| 2CO | 51+56.38 | 12.00 | 593.32 | 593.62 |
| 2CP | 51+66.38 | 12.00 | 593.03 | 593.28 |
| 2CQ | 51+76.38 | 12.00 | 592.74 | 592.94 |
| 2CR | 51+86.38 | 12.00 | 592.45 | 592.59 |
| 2CS | 51+96.38 | 12.00 | 592.14 | 592.24 |
| ℄ W BRG PIER 5 WB | 52+08.38 | 12.00 | 591.78 | 591.80 |
| ℄ PIER 5 WB | 52+09.88 | 12.00 | 591.73 | 591.75 |

### NOTES:

1. All Elevations and Offsets are in feet.
2. Offsets are measured with respect to the I-80 WB PGL. Negative offsets are left and positive are right of the PGL.

# FOR INFORMATION ONLY


WSP USA Inc.
30 N. LASALLE STREET
SUITE 4200
CHICAGO, IL 60602
TEL: (312) 782-8150
FAX: (312) 782-1684


| | | | |
|---|---|---|---|
| USER NAME = USCP702533 | DESIGNED - LAS | REVISED - | |
| | CHECKED - TB | REVISED - | |
| PLOT SCALE = 100.000 ' / in. | DRAWN - GM | REVISED - | |
| PLOT DATE = 10/11/2024 | CHECKED - LAS | REVISED - | |

**STATE OF ILLINOIS**
**DEPARTMENT OF TRANSPORTATION**

**TOP OF SLAB ELEVATIONS - UNIT 2 WB**
**STRUCTURE NUMBER 099-8309 WB AND 099-8325 EB**

SHEET S-31 OF S-87 SHEETS

| F.A.I RTE. | SECTION | COUNTY | TOTAL SHEETS | SHEET NO. |
|---|---|---|---|---|
| I-80 | (99-3DEFP) HF 23 | WILL | 89 | 33 |
| | | CONTRACT NO. 62W52 | | |
| | ILLINOIS | FED. AID PROJECT | | |


MODEL: Default
FILE NAME: pw://transystems-pw.bentley.com:transyscorp-pw1-hosted/Documents/Projects_2018/CH401/401180022/03-WSP/CAD/62W52-SF-3/Sheets/0998309-82W52-S031-DEW212.dgn

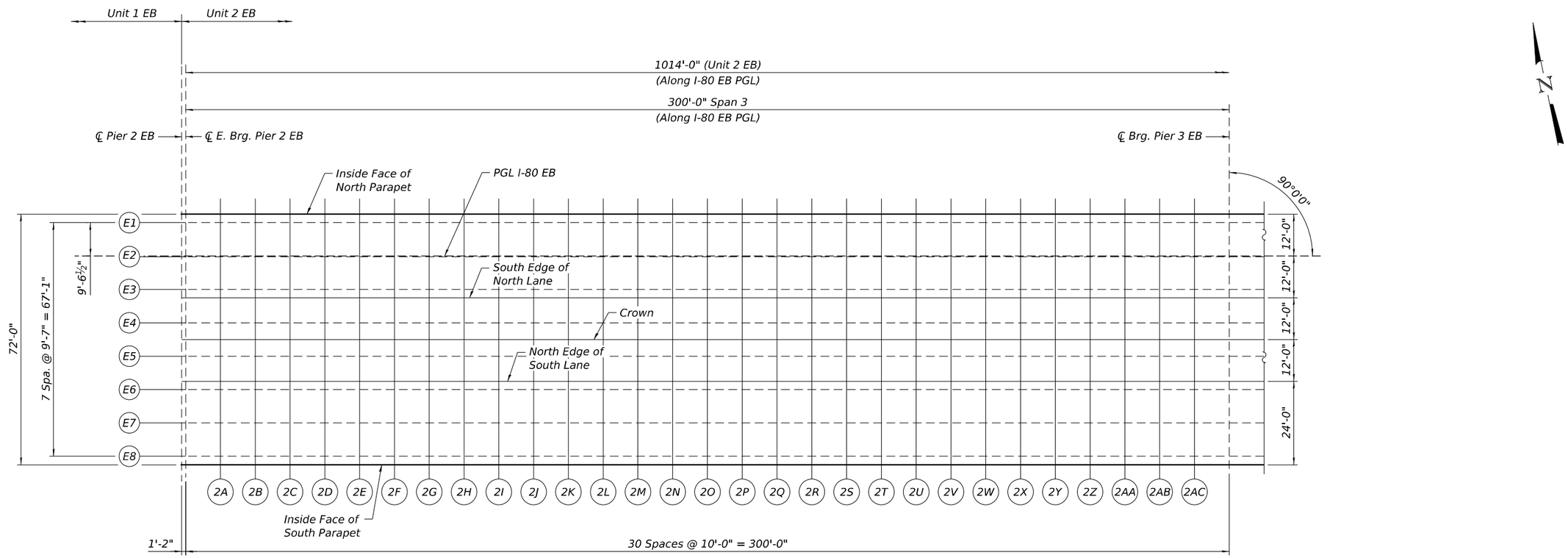


## PARTIAL PLAN - UNIT 2 EB

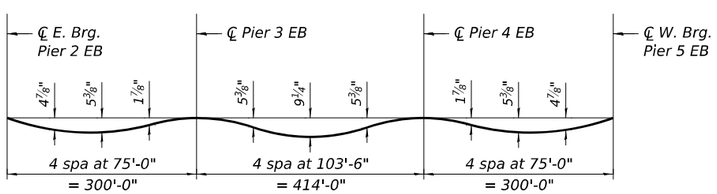


## DEAD LOAD DEFLECTION DIAGRAM

(Includes weight of concrete only.) See Note 5.

Note:
The above deflections are not to be used in the field if the engineer is working from the grade elevations adjusted for dead load deflections and grinding as shown on sheets S-34 to S-43.

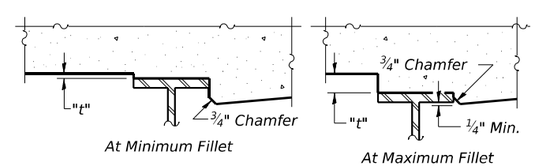


To determine "t": After all structural steel has been erected, elevations of the top flanges of the beams shall be taken at intervals shown on sheets S-34 to S-43. These elevations subtracted from the "Theoretical Grade Elevations Adjusted for Dead Load Deflection and Grinding" shown on sheets S-34 to S-43, minus the initial slab thickness prior to grinding, equals the fillet heights "t" above top flange of beams.

The slab is to be ground after curing to achieve smoothness, but the slab is not to be ground to elevations below the "Theoretical Grade Elevations" shown below. For grinding the deck, see Special Provisions.

## FILLET HEIGHTS

## NOTES:

1. The dead load deflections shown in the diagram and used for fillet height determination are based on the Deck Pouring Sequence shown on sheet S-57.
2. If the Contractor elects to use a different pour placement/hardening schedule, then the deflections and fillet heights shall be re-calculated.
3. The cost of re-calculating deflections and adjusting fillet heights shall be included in the cost of Concrete Superstructure.
4. Up to 1/4 inch to be ground off the bridge deck and the bridge approach slabs. The Profile Grade shows the final grade after grinding.
5. The dead load deflections used to compute the "Theoretical Grade Elevations Adjusted for Dead Load Deflections and Grinding" shown on sheets S-34 to S-43 include the weight of deck concrete and the parapets. The net effects of temporary formwork, assumed to be 10 PSF of deck surface area, placed on the noncomposite structure and later removed from the composite structure are included in these theoretical deflections.

# FOR INFORMATION ONLY


WSP USA Inc.
30 N. LASALLE STREET
SUITE 4200
CHICAGO, IL 60602
TEL: (312) 782-8150
FAX: (312) 782-1684


| | | | |
|---|---|---|---|
| USER NAME = USCP702533 | DESIGNED - LAS | REVISED - | |
| | CHECKED - TB | REVISED - | |
| PLOT SCALE = 32:0 ':' / in. | DRAWN - GM | REVISED - | |
| PLOT DATE = 10/11/2024 | CHECKED - LAS | REVISED - | |

**STATE OF ILLINOIS**
**DEPARTMENT OF TRANSPORTATION**

**TOP OF SLAB ELEVATION PLAN - UNIT 2 EB**
**STRUCTURE NUMBER 099-8309 WB AND 099-8325 EB**

SHEET S-32 OF S-87 SHEETS

| F.A.I RTE. | SECTION | COUNTY | TOTAL SHEETS | SHEET NO. |
|---|---|---|---|---|
| I-80 | (99-3DEFP) HF 23 | WILL | 89 | 34 |
| | | CONTRACT NO. 62W52 | | |
| | ILLINOIS | FED. AID PROJECT | | |


MODEL: Default
FILE NAME: pw://transystems-pw.bentley.com:transyscorp-pw1-hosted/Documents/Projects_2018/CH401/401180022/03-WSP/CAD/62W52-SF-3/Sheets/0998309-62W52-S032-DEF201.dgn

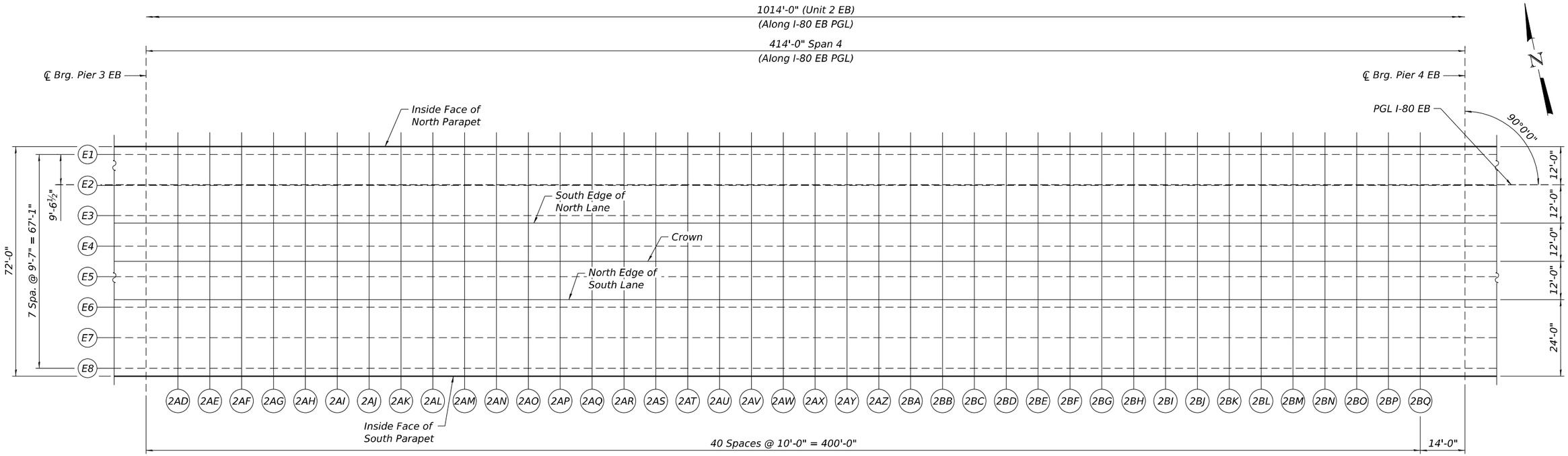


PARTIAL PLAN - UNIT 2 EB

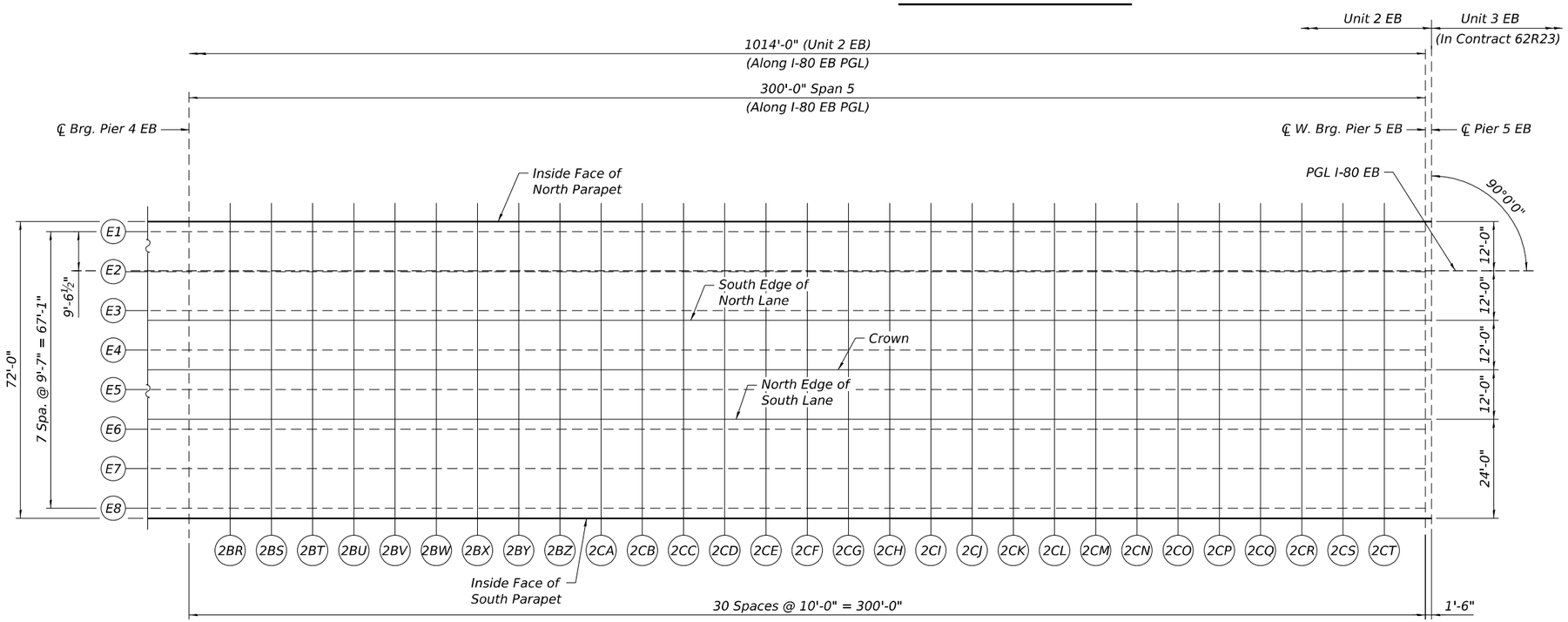


PARTIAL PLAN - UNIT 2 EB

# FOR INFORMATION ONLY

MODEL: Default
FILE NAME: pw://transystems-pw.bentley.com:transyscorp-pw1-hosted/Documents/Projects_2018/CH401401180022/03-WSP/CAD/62W52-SF-3/Sheets/0998309-62W52-S033-DEE202.dgn


WSP USA Inc.
30 N. LASALLE STREET
SUITE 4200
CHICAGO, IL 60602
TEL: (312) 782-8150
FAX: (312) 782-1684


| | | | |
|---|---|---|---|
| USER NAME = USCP702533 | DESIGNED - LAS | REVISED - | |
| | CHECKED - TB | REVISED - | |
| PLOT SCALE = 32:0 ':' / in. | DRAWN - GM | REVISED - | |
| PLOT DATE = 10/11/2024 | CHECKED - LAS | REVISED - | |

**STATE OF ILLINOIS**
**DEPARTMENT OF TRANSPORTATION**

**TOP OF SLAB ELEVATION PLAN - UNIT 2 EB**
**STRUCTURE NUMBER 099-8309 WB AND 099-8325 EB**

SHEET S-33 OF S-87 SHEETS

| F.A.I RTE. | SECTION | COUNTY | TOTAL SHEETS | SHEET NO. |
|---|---|---|---|---|
| I-80 | (99-3DEFP) HF 23 | WILL | 89 | 35 |
| | | CONTRACT NO. 62W52 | | |
| | ILLINOIS | FED. AID PROJECT | | |

## INSIDE FACE OF NORTH PARAPET - EB

| Location | Station | Offset | Theoretical Grade Elevations | Theoretical Grade Elevations Adjusted For Dead Load Deflection and Grinding |
|---|---|---|---|---|
| ℄ PIER 2 EB | 41+68.45 | -12.00 | 602.08 | 602.10 |
| ℄ E BRG PIER 2 EB | 41+69.62 | -12.00 | 602.10 | 602.12 |
| 2A | 41+79.62 | -12.00 | 602.20 | 602.29 |
| 2B | 41+89.62 | -12.00 | 602.31 | 602.46 |
| 2C | 41+99.62 | -12.00 | 602.40 | 602.62 |
| 2D | 42+09.62 | -12.00 | 602.50 | 602.77 |
| 2E | 42+19.62 | -12.00 | 602.59 | 602.91 |
| 2F | 42+29.62 | -12.00 | 602.67 | 603.04 |
| 2G | 42+39.62 | -12.00 | 602.76 | 603.17 |
| 2H | 42+49.62 | -12.00 | 602.84 | 603.28 |
| 2I | 42+59.62 | -12.00 | 602.91 | 603.38 |
| 2J | 42+69.62 | -12.00 | 602.98 | 603.47 |
| 2K | 42+79.62 | -12.00 | 603.05 | 603.55 |
| 2L | 42+89.62 | -12.00 | 603.11 | 603.61 |
| 2M | 42+99.62 | -12.00 | 603.17 | 603.67 |
| 2N | 43+09.62 | -12.00 | 603.22 | 603.71 |
| 2O | 43+19.62 | -12.00 | 603.27 | 603.74 |
| 2P | 43+29.62 | -12.00 | 603.32 | 603.76 |
| 2Q | 43+39.62 | -12.00 | 603.36 | 603.77 |
| 2R | 43+49.62 | -12.00 | 603.40 | 603.78 |
| 2S | 43+59.62 | -12.00 | 603.43 | 603.77 |
| 2T | 43+69.62 | -12.00 | 603.46 | 603.76 |
| 2U | 43+79.62 | -12.00 | 603.49 | 603.74 |
| 2V | 43+89.62 | -12.00 | 603.51 | 603.71 |
| 2W | 43+99.62 | -12.00 | 603.53 | 603.69 |
| 2X | 44+09.62 | -12.00 | 603.55 | 603.66 |
| 2Y | 44+19.62 | -12.00 | 603.56 | 603.64 |
| 2Z | 44+29.62 | -12.00 | 603.56 | 603.62 |
| 2AA | 44+39.62 | -12.00 | 603.57 | 603.60 |
| 2AB | 44+49.62 | -12.00 | 603.56 | 603.59 |
| 2AC | 44+59.62 | -12.00 | 603.56 | 603.58 |
| ℄ BRG. PIER 3 EB | 44+69.62 | -12.00 | 603.55 | 603.57 |
| 2AD | 44+79.62 | -12.00 | 603.54 | 603.57 |
| 2AE | 44+89.62 | -12.00 | 603.52 | 603.58 |
| 2AF | 44+99.62 | -12.00 | 603.50 | 603.58 |
| 2AG | 45+09.62 | -12.00 | 603.47 | 603.59 |
| 2AH | 45+19.62 | -12.00 | 603.44 | 603.61 |
| 2AI | 45+29.62 | -12.00 | 603.41 | 603.62 |
| 2AJ | 45+39.62 | -12.00 | 603.37 | 603.64 |
| 2AK | 45+49.62 | -12.00 | 603.33 | 603.66 |
| 2AL | 45+59.62 | -12.00 | 603.28 | 603.67 |
| 2AM | 45+69.62 | -12.00 | 603.23 | 603.68 |
| 2AN | 45+79.62 | -12.00 | 603.18 | 603.68 |
| 2AO | 45+89.62 | -12.00 | 603.12 | 603.68 |
| 2AP | 45+99.62 | -12.00 | 603.06 | 603.67 |
| 2AQ | 46+09.62 | -12.00 | 602.99 | 603.65 |
| 2AR | 46+19.62 | -12.00 | 602.93 | 603.61 |
| 2AS | 46+29.62 | -12.00 | 602.85 | 603.57 |
| 2AT | 46+39.62 | -12.00 | 602.77 | 603.52 |
| 2AU | 46+49.62 | -12.00 | 602.69 | 603.46 |
| 2AV | 46+59.62 | -12.00 | 602.61 | 603.39 |
| 2AW | 46+69.62 | -12.00 | 602.52 | 603.31 |
| 2AX | 46+79.62 | -12.00 | 602.42 | 603.22 |
| 2AY | 46+89.62 | -12.00 | 602.33 | 603.12 |
| 2AZ | 46+99.62 | -12.00 | 602.22 | 603.00 |

## INSIDE FACE OF NORTH PARAPET - EB (CONT.)

| Location | Station | Offset | Theoretical Grade Elevations | Theoretical Grade Elevations Adjusted For Dead Load Deflection and Grinding |
|---|---|---|---|---|
| 2BA | 47+09.62 | -12.00 | 602.12 | 602.88 |
| 2BB | 47+19.62 | -12.00 | 602.01 | 602.74 |
| 2BC | 47+29.62 | -12.00 | 601.90 | 602.60 |
| 2BD | 47+39.62 | -12.00 | 601.78 | 602.44 |
| 2BE | 47+49.62 | -12.00 | 601.66 | 602.28 |
| 2BF | 47+59.62 | -12.00 | 601.53 | 602.11 |
| 2BG | 47+69.62 | -12.00 | 601.40 | 601.92 |
| 2BH | 47+79.62 | -12.00 | 601.27 | 601.74 |
| 2BI | 47+89.62 | -12.00 | 601.13 | 601.54 |
| 2BJ | 47+99.62 | -12.00 | 600.99 | 601.34 |
| 2BK | 48+09.62 | -12.00 | 600.84 | 601.14 |
| 2BL | 48+19.62 | -12.00 | 600.69 | 600.93 |
| 2BM | 48+29.62 | -12.00 | 600.54 | 600.73 |
| 2BN | 48+39.62 | -12.00 | 600.38 | 600.52 |
| 2BO | 48+49.62 | -12.00 | 600.22 | 600.32 |
| 2BP | 48+59.62 | -12.00 | 600.06 | 600.12 |
| 2BQ | 48+69.62 | -12.00 | 599.89 | 599.93 |
| ℄ BRG. PIER 4 EB | 48+83.62 | -12.00 | 599.64 | 599.66 |
| 2BR | 48+93.62 | -12.00 | 599.46 | 599.48 |
| 2BS | 49+03.62 | -12.00 | 599.28 | 599.30 |
| 2BT | 49+13.62 | -12.00 | 599.09 | 599.13 |
| 2BU | 49+23.62 | -12.00 | 598.90 | 598.96 |
| 2BV | 49+33.62 | -12.00 | 598.71 | 598.79 |
| 2BW | 49+43.62 | -12.00 | 598.51 | 598.62 |
| 2BX | 49+53.62 | -12.00 | 598.30 | 598.46 |
| 2BY | 49+63.62 | -12.00 | 598.10 | 598.30 |
| 2BZ | 49+73.62 | -12.00 | 597.89 | 598.13 |
| 2CA | 49+83.62 | -12.00 | 597.67 | 597.96 |
| 2CB | 49+93.62 | -12.00 | 597.45 | 597.79 |
| 2CC | 50+03.62 | -12.00 | 597.23 | 597.61 |
| 2CD | 50+13.62 | -12.00 | 597.00 | 597.42 |
| 2CE | 50+23.62 | -12.00 | 596.77 | 597.22 |
| 2CF | 50+33.62 | -12.00 | 596.53 | 597.00 |
| 2CG | 50+43.62 | -12.00 | 596.30 | 596.78 |
| 2CH | 50+53.62 | -12.00 | 596.05 | 596.55 |
| 2CI | 50+63.62 | -12.00 | 595.81 | 596.31 |
| 2CJ | 50+73.62 | -12.00 | 595.55 | 596.05 |
| 2CK | 50+83.62 | -12.00 | 595.30 | 595.79 |
| 2CL | 50+93.62 | -12.00 | 595.04 | 595.51 |
| 2CM | 51+03.62 | -12.00 | 594.78 | 595.22 |
| 2CN | 51+13.62 | -12.00 | 594.51 | 594.92 |
| 2CO | 51+23.62 | -12.00 | 594.24 | 594.61 |
| 2CP | 51+33.62 | -12.00 | 593.96 | 594.29 |
| 2CQ | 51+43.62 | -12.00 | 593.68 | 593.95 |
| 2CR | 51+53.62 | -12.00 | 593.40 | 593.61 |
| 2CS | 51+63.62 | -12.00 | 593.11 | 593.26 |
| 2CT | 51+73.62 | -12.00 | 592.82 | 592.91 |
| ℄ W BRG PIER 5 EB | 51+83.62 | -12.00 | 592.53 | 592.55 |
| ℄ PIER 5 EB | 51+85.12 | -12.00 | 592.48 | 592.50 |

## GIRDER E1

| Location | Station | Offset | Theoretical Grade Elevations | Theoretical Grade Elevations Adjusted For Dead Load Deflection and Grinding |
|---|---|---|---|---|
| ℄ PIER 2 EB | 41+68.45 | -9.54 | 602.13 | 602.15 |
| ℄ E BRG PIER 2 EB | 41+69.62 | -9.54 | 602.15 | 602.17 |
| 2A | 41+79.62 | -9.54 | 602.25 | 602.34 |
| 2B | 41+89.62 | -9.54 | 602.35 | 602.50 |
| 2C | 41+99.62 | -9.54 | 602.45 | 602.66 |
| 2D | 42+09.62 | -9.54 | 602.55 | 602.82 |
| 2E | 42+19.62 | -9.54 | 602.64 | 602.96 |
| 2F | 42+29.62 | -9.54 | 602.72 | 603.09 |
| 2G | 42+39.62 | -9.54 | 602.81 | 603.22 |
| 2H | 42+49.62 | -9.54 | 602.88 | 603.33 |
| 2I | 42+59.62 | -9.54 | 602.96 | 603.43 |
| 2J | 42+69.62 | -9.54 | 603.03 | 603.52 |
| 2K | 42+79.62 | -9.54 | 603.10 | 603.59 |
| 2L | 42+89.62 | -9.54 | 603.16 | 603.66 |
| 2M | 42+99.62 | -9.54 | 603.22 | 603.72 |
| 2N | 43+09.62 | -9.54 | 603.27 | 603.76 |
| 2O | 43+19.62 | -9.54 | 603.32 | 603.79 |
| 2P | 43+29.62 | -9.54 | 603.37 | 603.81 |
| 2Q | 43+39.62 | -9.54 | 603.41 | 603.82 |
| 2R | 43+49.62 | -9.54 | 603.45 | 603.83 |
| 2S | 43+59.62 | -9.54 | 603.48 | 603.82 |
| 2T | 43+69.62 | -9.54 | 603.51 | 603.81 |
| 2U | 43+79.62 | -9.54 | 603.54 | 603.79 |
| 2V | 43+89.62 | -9.54 | 603.56 | 603.76 |
| 2W | 43+99.62 | -9.54 | 603.58 | 603.74 |
| 2X | 44+09.62 | -9.54 | 603.60 | 603.71 |
| 2Y | 44+19.62 | -9.54 | 603.61 | 603.69 |
| 2Z | 44+29.62 | -9.54 | 603.61 | 603.67 |
| 2AA | 44+39.62 | -9.54 | 603.61 | 603.65 |
| 2AB | 44+49.62 | -9.54 | 603.61 | 603.64 |
| 2AC | 44+59.62 | -9.54 | 603.61 | 603.63 |
| ℄ BRG. PIER 3 EB | 44+69.62 | -9.54 | 603.60 | 603.62 |
| 2AD | 44+79.62 | -9.54 | 603.58 | 603.62 |
| 2AE | 44+89.62 | -9.54 | 603.57 | 603.62 |
| 2AF | 44+99.62 | -9.54 | 603.55 | 603.63 |
| 2AG | 45+09.62 | -9.54 | 603.52 | 603.64 |
| 2AH | 45+19.62 | -9.54 | 603.49 | 603.66 |
| 2AI | 45+29.62 | -9.54 | 603.46 | 603.67 |
| 2AJ | 45+39.62 | -9.54 | 603.42 | 603.69 |
| 2AK | 45+49.62 | -9.54 | 603.38 | 603.70 |
| 2AL | 45+59.62 | -9.54 | 603.33 | 603.72 |
| 2AM | 45+69.62 | -9.54 | 603.28 | 603.73 |
| 2AN | 45+79.62 | -9.54 | 603.23 | 603.73 |
| 2AO | 45+89.62 | -9.54 | 603.17 | 603.73 |
| 2AP | 45+99.62 | -9.54 | 603.11 | 603.71 |
| 2AQ | 46+09.62 | -9.54 | 603.04 | 603.69 |
| 2AR | 46+19.62 | -9.54 | 602.97 | 603.66 |
| 2AS | 46+29.62 | -9.54 | 602.90 | 603.62 |
| 2AT | 46+39.62 | -9.54 | 602.82 | 603.57 |
| 2AU | 46+49.62 | -9.54 | 602.74 | 603.51 |
| 2AV | 46+59.62 | -9.54 | 602.66 | 603.44 |
| 2AW | 46+69.62 | -9.54 | 602.57 | 603.36 |
| 2AX | 46+79.62 | -9.54 | 602.47 | 603.27 |
| 2AY | 46+89.62 | -9.54 | 602.38 | 603.17 |
| 2AZ | 46+99.62 | -9.54 | 602.27 | 603.05 |

### NOTES:

1. All Elevations and Offsets are in feet.
2. Offsets are measured with respect to the I-80 EB PGL. Negative offsets are left and positive are right of the PGL.

# FOR INFORMATION ONLY

WSP USA Inc.
30 N. LASALLE STREET
SUITE 4200
CHICAGO, IL 60602
TEL: (312) 782-8150
FAX: (312) 782-1684

| | | | |
|---|---|---|---|
| USER NAME = USCP702533 | DESIGNED - LAS | REVISED - | |
| | CHECKED - TB | REVISED - | |
| PLOT SCALE = 100.000 ' / in. | DRAWN - GM | REVISED - | |
| PLOT DATE = 10/11/2024 | CHECKED - LAS | REVISED - | |

**STATE OF ILLINOIS**
**DEPARTMENT OF TRANSPORTATION**

**TOP OF SLAB ELEVATIONS - UNIT 2 EB**
**STRUCTURE NUMBER 099-8309 WB AND 099-8325 EB**

SHEET S-34 OF S-87 SHEETS

| F.A.I RTE. | SECTION | COUNTY | TOTAL SHEETS | SHEET NO. |
|---|---|---|---|---|
| I-80 | (99-3DEFP) HF 23 | WILL | 89 | 36 |
| | | CONTRACT NO. 62W52 | | |
| | ILLINOIS | FED. AID PROJECT | | |

MODEL: Default
FILE NAME: pw://transystems-pw.bentley.com:transyscorp-pw1-hosted\Documents\Projects_2018\CH401\401180022\03-WSP\CAD\62W52-SF-3\Sheets\0998309-E2W52-S034-DEF203.dgn

## GIRDER E1 (CONT.)

| Location | Station | Offset | Theoretical Grade Elevations | Theoretical Grade Elevations Adjusted For Dead Load Deflection and Grinding |
|---|---|---|---|---|
| 2BA | 47+09.62 | -9.54 | 602.17 | 602.93 |
| 2BB | 47+19.62 | -9.54 | 602.06 | 602.79 |
| 2BC | 47+29.62 | -9.54 | 601.95 | 602.65 |
| 2BD | 47+39.62 | -9.54 | 601.83 | 602.49 |
| 2BE | 47+49.62 | -9.54 | 601.71 | 602.33 |
| 2BF | 47+59.62 | -9.54 | 601.58 | 602.16 |
| 2BG | 47+69.62 | -9.54 | 601.45 | 601.97 |
| 2BH | 47+79.62 | -9.54 | 601.32 | 601.78 |
| 2BI | 47+89.62 | -9.54 | 601.18 | 601.59 |
| 2BJ | 47+99.62 | -9.54 | 601.04 | 601.39 |
| 2BK | 48+09.62 | -9.54 | 600.89 | 601.18 |
| 2BL | 48+19.62 | -9.54 | 600.74 | 600.98 |
| 2BM | 48+29.62 | -9.54 | 600.59 | 600.77 |
| 2BN | 48+39.62 | -9.54 | 600.43 | 600.57 |
| 2BO | 48+49.62 | -9.54 | 600.27 | 600.37 |
| 2BP | 48+59.62 | -9.54 | 600.10 | 600.17 |
| 2BQ | 48+69.62 | -9.54 | 599.94 | 599.98 |
| ℄ BRG. PIER 4 EB | 48+83.62 | -9.54 | 599.69 | 599.71 |
| 2BR | 48+93.62 | -9.54 | 599.51 | 599.53 |
| 2BS | 49+03.62 | -9.54 | 599.33 | 599.35 |
| 2BT | 49+13.62 | -9.54 | 599.14 | 599.18 |
| 2BU | 49+23.62 | -9.54 | 598.95 | 599.01 |
| 2BV | 49+33.62 | -9.54 | 598.76 | 598.84 |
| 2BW | 49+43.62 | -9.54 | 598.56 | 598.67 |
| 2BX | 49+53.62 | -9.54 | 598.35 | 598.51 |
| 2BY | 49+63.62 | -9.54 | 598.15 | 598.35 |
| 2BZ | 49+73.62 | -9.54 | 597.93 | 598.18 |
| 2CA | 49+83.62 | -9.54 | 597.72 | 598.01 |
| 2CB | 49+93.62 | -9.54 | 597.50 | 597.84 |
| 2CC | 50+03.62 | -9.54 | 597.28 | 597.66 |
| 2CD | 50+13.62 | -9.54 | 597.05 | 597.46 |
| 2CE | 50+23.62 | -9.54 | 596.82 | 597.26 |
| 2CF | 50+33.62 | -9.54 | 596.58 | 597.05 |
| 2CG | 50+43.62 | -9.54 | 596.34 | 596.83 |
| 2CH | 50+53.62 | -9.54 | 596.10 | 596.60 |
| 2CI | 50+63.62 | -9.54 | 595.85 | 596.36 |
| 2CJ | 50+73.62 | -9.54 | 595.60 | 596.10 |
| 2CK | 50+83.62 | -9.54 | 595.35 | 595.84 |
| 2CL | 50+93.62 | -9.54 | 595.09 | 595.56 |
| 2CM | 51+03.62 | -9.54 | 594.83 | 595.27 |
| 2CN | 51+13.62 | -9.54 | 594.56 | 594.97 |
| 2CO | 51+23.62 | -9.54 | 594.29 | 594.66 |
| 2CP | 51+33.62 | -9.54 | 594.01 | 594.33 |
| 2CQ | 51+43.62 | -9.54 | 593.73 | 594.00 |
| 2CR | 51+53.62 | -9.54 | 593.45 | 593.66 |
| 2CS | 51+63.62 | -9.54 | 593.16 | 593.31 |
| 2CT | 51+73.62 | -9.54 | 592.87 | 592.96 |
| ℄ W BRG PIER 5 EB | 51+83.62 | -9.54 | 592.58 | 592.60 |
| ℄ PIER 5 EB | 51+85.12 | -9.54 | 592.53 | 592.55 |

## PGL I-80 EB

| Location | Station | Offset | Theoretical Grade Elevations | Theoretical Grade Elevations Adjusted For Dead Load Deflection and Grinding |
|---|---|---|---|---|
| ℄ PIER 2 EB | 41+68.45 | 0.00 | 602.32 | 602.34 |
| ℄ E BRG PIER 2 EB | 41+69.62 | 0.00 | 602.34 | 602.36 |
| 2A | 41+79.62 | 0.00 | 602.44 | 602.53 |
| 2B | 41+89.62 | 0.00 | 602.55 | 602.70 |
| 2C | 41+99.62 | 0.00 | 602.64 | 602.86 |
| 2D | 42+09.62 | 0.00 | 602.74 | 603.01 |
| 2E | 42+19.62 | 0.00 | 602.83 | 603.15 |
| 2F | 42+29.62 | 0.00 | 602.91 | 603.28 |
| 2G | 42+39.62 | 0.00 | 603.00 | 603.41 |
| 2H | 42+49.62 | 0.00 | 603.08 | 603.52 |
| 2I | 42+59.62 | 0.00 | 603.15 | 603.62 |
| 2J | 42+69.62 | 0.00 | 603.22 | 603.71 |
| 2K | 42+79.62 | 0.00 | 603.29 | 603.79 |
| 2L | 42+89.62 | 0.00 | 603.35 | 603.85 |
| 2M | 42+99.62 | 0.00 | 603.41 | 603.91 |
| 2N | 43+09.62 | 0.00 | 603.46 | 603.95 |
| 2O | 43+19.62 | 0.00 | 603.51 | 603.98 |
| 2P | 43+29.62 | 0.00 | 603.56 | 604.00 |
| 2Q | 43+39.62 | 0.00 | 603.60 | 604.01 |
| 2R | 43+49.62 | 0.00 | 603.64 | 604.02 |
| 2S | 43+59.62 | 0.00 | 603.67 | 604.01 |
| 2T | 43+69.62 | 0.00 | 603.70 | 604.00 |
| 2U | 43+79.62 | 0.00 | 603.73 | 603.98 |
| 2V | 43+89.62 | 0.00 | 603.75 | 603.95 |
| 2W | 43+99.62 | 0.00 | 603.77 | 603.93 |
| 2X | 44+09.62 | 0.00 | 603.79 | 603.90 |
| 2Y | 44+19.62 | 0.00 | 603.80 | 603.88 |
| 2Z | 44+29.62 | 0.00 | 603.80 | 603.86 |
| 2AA | 44+39.62 | 0.00 | 603.81 | 603.84 |
| 2AB | 44+49.62 | 0.00 | 603.80 | 603.83 |
| 2AC | 44+59.62 | 0.00 | 603.80 | 603.82 |
| ℄ BRG. PIER 3 EB | 44+69.62 | 0.00 | 603.79 | 603.81 |
| 2AD | 44+79.62 | 0.00 | 603.78 | 603.81 |
| 2AE | 44+89.62 | 0.00 | 603.76 | 603.82 |
| 2AF | 44+99.62 | 0.00 | 603.74 | 603.82 |
| 2AG | 45+09.62 | 0.00 | 603.71 | 603.83 |
| 2AH | 45+19.62 | 0.00 | 603.68 | 603.85 |
| 2AI | 45+29.62 | 0.00 | 603.65 | 603.86 |
| 2AJ | 45+39.62 | 0.00 | 603.61 | 603.88 |
| 2AK | 45+49.62 | 0.00 | 603.57 | 603.90 |
| 2AL | 45+59.62 | 0.00 | 603.52 | 603.91 |
| 2AM | 45+69.62 | 0.00 | 603.47 | 603.92 |
| 2AN | 45+79.62 | 0.00 | 603.42 | 603.92 |
| 2AO | 45+89.62 | 0.00 | 603.36 | 603.92 |
| 2AP | 45+99.62 | 0.00 | 603.30 | 603.91 |
| 2AQ | 46+09.62 | 0.00 | 603.23 | 603.89 |
| 2AR | 46+19.62 | 0.00 | 603.17 | 603.85 |
| 2AS | 46+29.62 | 0.00 | 603.09 | 603.81 |
| 2AT | 46+39.62 | 0.00 | 603.01 | 603.76 |
| 2AU | 46+49.62 | 0.00 | 602.93 | 603.70 |
| 2AV | 46+59.62 | 0.00 | 602.85 | 603.63 |
| 2AW | 46+69.62 | 0.00 | 602.76 | 603.55 |
| 2AX | 46+79.62 | 0.00 | 602.66 | 603.46 |
| 2AY | 46+89.62 | 0.00 | 602.57 | 603.36 |
| 2AZ | 46+99.62 | 0.00 | 602.46 | 603.24 |

## PGL I-80 EB (CONT.)

| Location | Station | Offset | Theoretical Grade Elevations | Theoretical Grade Elevations Adjusted For Dead Load Deflection and Grinding |
|---|---|---|---|---|
| 2BA | 47+09.62 | 0.00 | 602.36 | 603.12 |
| 2BB | 47+19.62 | 0.00 | 602.25 | 602.98 |
| 2BC | 47+29.62 | 0.00 | 602.14 | 602.84 |
| 2BD | 47+39.62 | 0.00 | 602.02 | 602.68 |
| 2BE | 47+49.62 | 0.00 | 601.90 | 602.52 |
| 2BF | 47+59.62 | 0.00 | 601.77 | 602.35 |
| 2BG | 47+69.62 | 0.00 | 601.64 | 602.16 |
| 2BH | 47+79.62 | 0.00 | 601.51 | 601.98 |
| 2BI | 47+89.62 | 0.00 | 601.37 | 601.78 |
| 2BJ | 47+99.62 | 0.00 | 601.23 | 601.58 |
| 2BK | 48+09.62 | 0.00 | 601.08 | 601.38 |
| 2BL | 48+19.62 | 0.00 | 600.93 | 601.17 |
| 2BM | 48+29.62 | 0.00 | 600.78 | 600.97 |
| 2BN | 48+39.62 | 0.00 | 600.62 | 600.76 |
| 2BO | 48+49.62 | 0.00 | 600.46 | 600.56 |
| 2BP | 48+59.62 | 0.00 | 600.30 | 600.36 |
| 2BQ | 48+69.62 | 0.00 | 600.13 | 600.17 |
| ℄ BRG. PIER 4 EB | 48+83.62 | 0.00 | 599.88 | 599.90 |
| 2BR | 48+93.62 | 0.00 | 599.70 | 599.72 |
| 2BS | 49+03.62 | 0.00 | 599.52 | 599.54 |
| 2BT | 49+13.62 | 0.00 | 599.33 | 599.37 |
| 2BU | 49+23.62 | 0.00 | 599.14 | 599.20 |
| 2BV | 49+33.62 | 0.00 | 598.95 | 599.03 |
| 2BW | 49+43.62 | 0.00 | 598.75 | 598.86 |
| 2BX | 49+53.62 | 0.00 | 598.54 | 598.70 |
| 2BY | 49+63.62 | 0.00 | 598.34 | 598.54 |
| 2BZ | 49+73.62 | 0.00 | 598.13 | 598.37 |
| 2CA | 49+83.62 | 0.00 | 597.91 | 598.20 |
| 2CB | 49+93.62 | 0.00 | 597.69 | 598.03 |
| 2CC | 50+03.62 | 0.00 | 597.47 | 597.85 |
| 2CD | 50+13.62 | 0.00 | 597.24 | 597.66 |
| 2CE | 50+23.62 | 0.00 | 597.01 | 597.46 |
| 2CF | 50+33.62 | 0.00 | 596.77 | 597.24 |
| 2CG | 50+43.62 | 0.00 | 596.54 | 597.02 |
| 2CH | 50+53.62 | 0.00 | 596.29 | 596.79 |
| 2CI | 50+63.62 | 0.00 | 596.05 | 596.55 |
| 2CJ | 50+73.62 | 0.00 | 595.79 | 596.29 |
| 2CK | 50+83.62 | 0.00 | 595.54 | 596.03 |
| 2CL | 50+93.62 | 0.00 | 595.28 | 595.75 |
| 2CM | 51+03.62 | 0.00 | 595.02 | 595.46 |
| 2CN | 51+13.62 | 0.00 | 594.75 | 595.16 |
| 2CO | 51+23.62 | 0.00 | 594.48 | 594.85 |
| 2CP | 51+33.62 | 0.00 | 594.20 | 594.53 |
| 2CQ | 51+43.62 | 0.00 | 593.92 | 594.19 |
| 2CR | 51+53.62 | 0.00 | 593.64 | 593.85 |
| 2CS | 51+63.62 | 0.00 | 593.35 | 593.50 |
| 2CT | 51+73.62 | 0.00 | 593.06 | 593.15 |
| ℄ W BRG PIER 5 EB | 51+83.62 | 0.00 | 592.77 | 592.79 |
| ℄ PIER 5 EB | 51+85.12 | 0.00 | 592.72 | 592.74 |

### NOTES:

1. All Elevations and Offsets are in feet.
2. Offsets are measured with respect to the I-80 EB PGL. Negative offsets are left and positive are right of the PGL.

# FOR INFORMATION ONLY


WSP USA Inc.
30 N. LASALLE STREET
SUITE 4200
CHICAGO, IL 60602
TEL: (312) 782-8150
FAX: (312) 782-1684


| | | | |
|---|---|---|---|
| USER NAME = USCP702533 | DESIGNED - LAS | REVISED - | |
| | CHECKED - TB | REVISED - | |
| PLOT SCALE = 100.000 ' / in. | DRAWN - GM | REVISED - | |
| PLOT DATE = 10/11/2024 | CHECKED - LAS | REVISED - | |

**STATE OF ILLINOIS**
**DEPARTMENT OF TRANSPORTATION**

**TOP OF SLAB ELEVATIONS - UNIT 2 EB**
**STRUCTURE NUMBER 099-8309 WB AND 099-8325 EB**

SHEET S-35 OF S-87 SHEETS

| F.A.I RTE. | SECTION | COUNTY | TOTAL SHEETS | SHEET NO. |
|---|---|---|---|---|
| I-80 | (99-3DEFP) HF 23 | WILL | 89 | 37 |
| | | CONTRACT NO. 62W52 | | |
| | ILLINOIS | FED. AID PROJECT | | |


MODEL: Default
FILE NAME: pw://transystems-pw.bentley.com:transyscorp-pw1-hosted/Documents/Projects_2018/CH401/401180022/03-WSP/CAD/62W52-SF-3/Sheets/0998309-62W52-S035-DEF204.dgn

## GIRDER E2

| Location | Station | Offset | Theoretical Grade Elevations | Theoretical Grade Elevations Adjusted For Dead Load Deflection and Grinding |
|---|---|---|---|---|
| ℄ PIER 2 EB | 41+68.45 | 0.04 | 602.32 | 602.35 |
| ℄ E BRG PIER 2 EB | 41+69.62 | 0.04 | 602.34 | 602.36 |
| 2A | 41+79.62 | 0.04 | 602.44 | 602.53 |
| 2B | 41+89.62 | 0.04 | 602.55 | 602.70 |
| 2C | 41+99.62 | 0.04 | 602.64 | 602.86 |
| 2D | 42+09.62 | 0.04 | 602.74 | 603.01 |
| 2E | 42+19.62 | 0.04 | 602.83 | 603.15 |
| 2F | 42+29.62 | 0.04 | 602.92 | 603.28 |
| 2G | 42+39.62 | 0.04 | 603.00 | 603.41 |
| 2H | 42+49.62 | 0.04 | 603.08 | 603.52 |
| 2I | 42+59.62 | 0.04 | 603.15 | 603.62 |
| 2J | 42+69.62 | 0.04 | 603.22 | 603.71 |
| 2K | 42+79.62 | 0.04 | 603.29 | 603.79 |
| 2L | 42+89.62 | 0.04 | 603.35 | 603.85 |
| 2M | 42+99.62 | 0.04 | 603.41 | 603.91 |
| 2N | 43+09.62 | 0.04 | 603.46 | 603.95 |
| 2O | 43+19.62 | 0.04 | 603.51 | 603.98 |
| 2P | 43+29.62 | 0.04 | 603.56 | 604.00 |
| 2Q | 43+39.62 | 0.04 | 603.60 | 604.02 |
| 2R | 43+49.62 | 0.04 | 603.64 | 604.02 |
| 2S | 43+59.62 | 0.04 | 603.68 | 604.01 |
| 2T | 43+69.62 | 0.04 | 603.71 | 604.00 |
| 2U | 43+79.62 | 0.04 | 603.73 | 603.98 |
| 2V | 43+89.62 | 0.04 | 603.75 | 603.95 |
| 2W | 43+99.62 | 0.04 | 603.77 | 603.93 |
| 2X | 44+09.62 | 0.04 | 603.79 | 603.90 |
| 2Y | 44+19.62 | 0.04 | 603.80 | 603.88 |
| 2Z | 44+29.62 | 0.04 | 603.80 | 603.86 |
| 2AA | 44+39.62 | 0.04 | 603.81 | 603.84 |
| 2AB | 44+49.62 | 0.04 | 603.80 | 603.83 |
| 2AC | 44+59.62 | 0.04 | 603.80 | 603.82 |
| ℄ BRG. PIER 3 EB | 44+69.62 | 0.04 | 603.79 | 603.81 |
| 2AD | 44+79.62 | 0.04 | 603.78 | 603.81 |
| 2AE | 44+89.62 | 0.04 | 603.76 | 603.82 |
| 2AF | 44+99.62 | 0.04 | 603.74 | 603.82 |
| 2AG | 45+09.62 | 0.04 | 603.71 | 603.83 |
| 2AH | 45+19.62 | 0.04 | 603.68 | 603.85 |
| 2AI | 45+29.62 | 0.04 | 603.65 | 603.86 |
| 2AJ | 45+39.62 | 0.04 | 603.61 | 603.88 |
| 2AK | 45+49.62 | 0.04 | 603.57 | 603.90 |
| 2AL | 45+59.62 | 0.04 | 603.52 | 603.91 |
| 2AM | 45+69.62 | 0.04 | 603.47 | 603.92 |
| 2AN | 45+79.62 | 0.04 | 603.42 | 603.92 |
| 2AO | 45+89.62 | 0.04 | 603.36 | 603.92 |
| 2AP | 45+99.62 | 0.04 | 603.30 | 603.91 |
| 2AQ | 46+09.62 | 0.04 | 603.24 | 603.89 |
| 2AR | 46+19.62 | 0.04 | 603.17 | 603.85 |
| 2AS | 46+29.62 | 0.04 | 603.09 | 603.81 |
| 2AT | 46+39.62 | 0.04 | 603.02 | 603.77 |
| 2AU | 46+49.62 | 0.04 | 602.93 | 603.70 |
| 2AV | 46+59.62 | 0.04 | 602.85 | 603.63 |
| 2AW | 46+69.62 | 0.04 | 602.76 | 603.55 |
| 2AX | 46+79.62 | 0.04 | 602.66 | 603.46 |
| 2AY | 46+89.62 | 0.04 | 602.57 | 603.36 |
| 2AZ | 46+99.62 | 0.04 | 602.47 | 603.24 |

## GIRDER E2 (CONT.)

| Location | Station | Offset | Theoretical Grade Elevations | Theoretical Grade Elevations Adjusted For Dead Load Deflection and Grinding |
|---|---|---|---|---|
| 2BA | 47+09.62 | 0.04 | 602.36 | 603.12 |
| 2BB | 47+19.62 | 0.04 | 602.25 | 602.98 |
| 2BC | 47+29.62 | 0.04 | 602.14 | 602.84 |
| 2BD | 47+39.62 | 0.04 | 602.02 | 602.69 |
| 2BE | 47+49.62 | 0.04 | 601.90 | 602.52 |
| 2BF | 47+59.62 | 0.04 | 601.77 | 602.35 |
| 2BG | 47+69.62 | 0.04 | 601.64 | 602.17 |
| 2BH | 47+79.62 | 0.04 | 601.51 | 601.98 |
| 2BI | 47+89.62 | 0.04 | 601.37 | 601.78 |
| 2BJ | 47+99.62 | 0.04 | 601.23 | 601.58 |
| 2BK | 48+09.62 | 0.04 | 601.08 | 601.38 |
| 2BL | 48+19.62 | 0.04 | 600.93 | 601.17 |
| 2BM | 48+29.62 | 0.04 | 600.78 | 600.97 |
| 2BN | 48+39.62 | 0.04 | 600.62 | 600.76 |
| 2BO | 48+49.62 | 0.04 | 600.46 | 600.56 |
| 2BP | 48+59.62 | 0.04 | 600.30 | 600.37 |
| 2BQ | 48+69.62 | 0.04 | 600.13 | 600.17 |
| ℄ BRG. PIER 4 EB | 48+83.62 | 0.04 | 599.88 | 599.90 |
| 2BR | 48+93.62 | 0.04 | 599.70 | 599.72 |
| 2BS | 49+03.62 | 0.04 | 599.52 | 599.54 |
| 2BT | 49+13.62 | 0.04 | 599.33 | 599.37 |
| 2BU | 49+23.62 | 0.04 | 599.14 | 599.20 |
| 2BV | 49+33.62 | 0.04 | 598.95 | 599.03 |
| 2BW | 49+43.62 | 0.04 | 598.75 | 598.86 |
| 2BX | 49+53.62 | 0.04 | 598.54 | 598.70 |
| 2BY | 49+63.62 | 0.04 | 598.34 | 598.54 |
| 2BZ | 49+73.62 | 0.04 | 598.13 | 598.37 |
| 2CA | 49+83.62 | 0.04 | 597.91 | 598.20 |
| 2CB | 49+93.62 | 0.04 | 597.69 | 598.03 |
| 2CC | 50+03.62 | 0.04 | 597.47 | 597.85 |
| 2CD | 50+13.62 | 0.04 | 597.24 | 597.66 |
| 2CE | 50+23.62 | 0.04 | 597.01 | 597.46 |
| 2CF | 50+33.62 | 0.04 | 596.78 | 597.25 |
| 2CG | 50+43.62 | 0.04 | 596.54 | 597.02 |
| 2CH | 50+53.62 | 0.04 | 596.29 | 596.79 |
| 2CI | 50+63.62 | 0.04 | 596.05 | 596.55 |
| 2CJ | 50+73.62 | 0.04 | 595.79 | 596.30 |
| 2CK | 50+83.62 | 0.04 | 595.54 | 596.03 |
| 2CL | 50+93.62 | 0.04 | 595.28 | 595.75 |
| 2CM | 51+03.62 | 0.04 | 595.02 | 595.46 |
| 2CN | 51+13.62 | 0.04 | 594.75 | 595.16 |
| 2CO | 51+23.62 | 0.04 | 594.48 | 594.85 |
| 2CP | 51+33.62 | 0.04 | 594.20 | 594.53 |
| 2CQ | 51+43.62 | 0.04 | 593.92 | 594.19 |
| 2CR | 51+53.62 | 0.04 | 593.64 | 593.85 |
| 2CS | 51+63.62 | 0.04 | 593.35 | 593.51 |
| 2CT | 51+73.62 | 0.04 | 593.06 | 593.15 |
| ℄ W BRG PIER 5 EB | 51+83.62 | 0.04 | 592.77 | 592.79 |
| ℄ PIER 5 EB | 51+85.12 | 0.04 | 592.72 | 592.74 |

## GIRDER E3

| Location | Station | Offset | Theoretical Grade Elevations | Theoretical Grade Elevations Adjusted For Dead Load Deflection and Grinding |
|---|---|---|---|---|
| ℄ PIER 2 EB | 41+68.45 | 9.63 | 602.52 | 602.54 |
| ℄ E BRG PIER 2 EB | 41+69.62 | 9.63 | 602.53 | 602.55 |
| 2A | 41+79.62 | 9.63 | 602.64 | 602.72 |
| 2B | 41+89.62 | 9.63 | 602.74 | 602.89 |
| 2C | 41+99.62 | 9.63 | 602.84 | 603.05 |
| 2D | 42+09.62 | 9.63 | 602.93 | 603.20 |
| 2E | 42+19.62 | 9.63 | 603.02 | 603.34 |
| 2F | 42+29.62 | 9.63 | 603.11 | 603.48 |
| 2G | 42+39.62 | 9.63 | 603.19 | 603.60 |
| 2H | 42+49.62 | 9.63 | 603.27 | 603.71 |
| 2I | 42+59.62 | 9.63 | 603.34 | 603.81 |
| 2J | 42+69.62 | 9.63 | 603.41 | 603.90 |
| 2K | 42+79.62 | 9.63 | 603.48 | 603.98 |
| 2L | 42+89.62 | 9.63 | 603.54 | 604.04 |
| 2M | 42+99.62 | 9.63 | 603.60 | 604.10 |
| 2N | 43+09.62 | 9.63 | 603.65 | 604.14 |
| 2O | 43+19.62 | 9.63 | 603.71 | 604.17 |
| 2P | 43+29.62 | 9.63 | 603.75 | 604.20 |
| 2Q | 43+39.62 | 9.63 | 603.79 | 604.21 |
| 2R | 43+49.62 | 9.63 | 603.83 | 604.21 |
| 2S | 43+59.62 | 9.63 | 603.87 | 604.20 |
| 2T | 43+69.62 | 9.63 | 603.90 | 604.19 |
| 2U | 43+79.62 | 9.63 | 603.92 | 604.17 |
| 2V | 43+89.62 | 9.63 | 603.95 | 604.15 |
| 2W | 43+99.62 | 9.63 | 603.96 | 604.12 |
| 2X | 44+09.62 | 9.63 | 603.98 | 604.09 |
| 2Y | 44+19.62 | 9.63 | 603.99 | 604.07 |
| 2Z | 44+29.62 | 9.63 | 604.00 | 604.05 |
| 2AA | 44+39.62 | 9.63 | 604.00 | 604.03 |
| 2AB | 44+49.62 | 9.63 | 604.00 | 604.02 |
| 2AC | 44+59.62 | 9.63 | 603.99 | 604.01 |
| ℄ BRG. PIER 3 EB | 44+69.62 | 9.63 | 603.98 | 604.00 |
| 2AD | 44+79.62 | 9.63 | 603.97 | 604.00 |
| 2AE | 44+89.62 | 9.63 | 603.95 | 604.01 |
| 2AF | 44+99.62 | 9.63 | 603.93 | 604.02 |
| 2AG | 45+09.62 | 9.63 | 603.90 | 604.03 |
| 2AH | 45+19.62 | 9.63 | 603.87 | 604.04 |
| 2AI | 45+29.62 | 9.63 | 603.84 | 604.05 |
| 2AJ | 45+39.62 | 9.63 | 603.80 | 604.07 |
| 2AK | 45+49.62 | 9.63 | 603.76 | 604.09 |
| 2AL | 45+59.62 | 9.63 | 603.72 | 604.10 |
| 2AM | 45+69.62 | 9.63 | 603.67 | 604.11 |
| 2AN | 45+79.62 | 9.63 | 603.61 | 604.11 |
| 2AO | 45+89.62 | 9.63 | 603.55 | 604.11 |
| 2AP | 45+99.62 | 9.63 | 603.49 | 604.10 |
| 2AQ | 46+09.62 | 9.63 | 603.43 | 604.08 |
| 2AR | 46+19.62 | 9.63 | 603.36 | 604.05 |
| 2AS | 46+29.62 | 9.63 | 603.28 | 604.01 |
| 2AT | 46+39.62 | 9.63 | 603.21 | 603.96 |
| 2AU | 46+49.62 | 9.63 | 603.13 | 603.90 |
| 2AV | 46+59.62 | 9.63 | 603.04 | 603.82 |
| 2AW | 46+69.62 | 9.63 | 602.95 | 603.74 |
| 2AX | 46+79.62 | 9.63 | 602.86 | 603.65 |
| 2AY | 46+89.62 | 9.63 | 602.76 | 603.55 |
| 2AZ | 46+99.62 | 9.63 | 602.66 | 603.44 |

### NOTES:

1. All Elevations and Offsets are in feet.
2. Offsets are measured with respect to the I-80 EB PGL. Negative offsets are left and positive are right of the PGL.

# FOR INFORMATION ONLY

MODEL: Default
FILE NAME: pw://transystems-pw.bentley.com:transyscorp-pw1-hosted\Documents\Projects_2018\CH401\401180022\03-WSP\CAD\62W52-SF-3\Sheets\0998309-E2W52-S036-DEF205.dgn

WSP USA Inc.
30 N. LASALLE STREET
SUITE 4200
CHICAGO, IL 60602
TEL: (312) 782-8150
FAX: (312) 782-1684

| | | | |
|---|---|---|---|
| USER NAME = USCP702533 | DESIGNED - LAS | REVISED - | |
| | CHECKED - TB | REVISED - | |
| PLOT SCALE = 100.000 ' / in. | DRAWN - GM | REVISED - | |
| PLOT DATE = 10/11/2024 | CHECKED - LAS | REVISED - | |

**STATE OF ILLINOIS**
**DEPARTMENT OF TRANSPORTATION**

**TOP OF SLAB ELEVATIONS - UNIT 2 EB**
**STRUCTURE NUMBER 099-8309 WB AND 099-8325 EB**

SHEET S-36 OF S-87 SHEETS

| F.A.I RTE. | SECTION | COUNTY | TOTAL SHEETS | SHEET NO. |
|---|---|---|---|---|
| I-80 | (99-3DEFP) HF 23 | WILL | 89 | 38 |
| | | CONTRACT NO. 62W52 | | |
| | ILLINOIS | FED. AID PROJECT | | |

## GIRDER E3 (CONT.)

| Location | Station | Offset | Theoretical Grade Elevations | Theoretical Grade Elevations Adjusted For Dead Load Deflection and Grinding |
|---|---|---|---|---|
| 2BA | 47+09.62 | 9.63 | 602.55 | 603.31 |
| 2BB | 47+19.62 | 9.63 | 602.44 | 603.18 |
| 2BC | 47+29.62 | 9.63 | 602.33 | 603.03 |
| 2BD | 47+39.62 | 9.63 | 602.21 | 602.88 |
| 2BE | 47+49.62 | 9.63 | 602.09 | 602.71 |
| 2BF | 47+59.62 | 9.63 | 601.96 | 602.54 |
| 2BG | 47+69.62 | 9.63 | 601.83 | 602.36 |
| 2BH | 47+79.62 | 9.63 | 601.70 | 602.17 |
| 2BI | 47+89.62 | 9.63 | 601.56 | 601.97 |
| 2BJ | 47+99.62 | 9.63 | 601.42 | 601.77 |
| 2BK | 48+09.62 | 9.63 | 601.28 | 601.57 |
| 2BL | 48+19.62 | 9.63 | 601.13 | 601.36 |
| 2BM | 48+29.62 | 9.63 | 600.97 | 601.16 |
| 2BN | 48+39.62 | 9.63 | 600.82 | 600.95 |
| 2BO | 48+49.62 | 9.63 | 600.65 | 600.75 |
| 2BP | 48+59.62 | 9.63 | 600.49 | 600.56 |
| 2BQ | 48+69.62 | 9.63 | 600.32 | 600.36 |
| ℄ BRG. PIER 4 EB | 48+83.62 | 9.63 | 600.07 | 600.10 |
| 2BR | 48+93.62 | 9.63 | 599.90 | 599.91 |
| 2BS | 49+03.62 | 9.63 | 599.71 | 599.74 |
| 2BT | 49+13.62 | 9.63 | 599.53 | 599.56 |
| 2BU | 49+23.62 | 9.63 | 599.33 | 599.39 |
| 2BV | 49+33.62 | 9.63 | 599.14 | 599.22 |
| 2BW | 49+43.62 | 9.63 | 598.94 | 599.06 |
| 2BX | 49+53.62 | 9.63 | 598.74 | 598.89 |
| 2BY | 49+63.62 | 9.63 | 598.53 | 598.73 |
| 2BZ | 49+73.62 | 9.63 | 598.32 | 598.56 |
| 2CA | 49+83.62 | 9.63 | 598.10 | 598.40 |
| 2CB | 49+93.62 | 9.63 | 597.88 | 598.22 |
| 2CC | 50+03.62 | 9.63 | 597.66 | 598.04 |
| 2CD | 50+13.62 | 9.63 | 597.43 | 597.85 |
| 2CE | 50+23.62 | 9.63 | 597.20 | 597.65 |
| 2CF | 50+33.62 | 9.63 | 596.97 | 597.44 |
| 2CG | 50+43.62 | 9.63 | 596.73 | 597.22 |
| 2CH | 50+53.62 | 9.63 | 596.48 | 596.99 |
| 2CI | 50+63.62 | 9.63 | 596.24 | 596.74 |
| 2CJ | 50+73.62 | 9.63 | 595.99 | 596.49 |
| 2CK | 50+83.62 | 9.63 | 595.73 | 596.22 |
| 2CL | 50+93.62 | 9.63 | 595.47 | 595.94 |
| 2CM | 51+03.62 | 9.63 | 595.21 | 595.65 |
| 2CN | 51+13.62 | 9.63 | 594.94 | 595.35 |
| 2CO | 51+23.62 | 9.63 | 594.67 | 595.04 |
| 2CP | 51+33.62 | 9.63 | 594.40 | 594.72 |
| 2CQ | 51+43.62 | 9.63 | 594.12 | 594.39 |
| 2CR | 51+53.62 | 9.63 | 593.83 | 594.05 |
| 2CS | 51+63.62 | 9.63 | 593.55 | 593.70 |
| 2CT | 51+73.62 | 9.63 | 593.25 | 593.34 |
| ℄ W BRG PIER 5 EB | 51+83.62 | 9.63 | 592.96 | 592.98 |
| ℄ PIER 5 EB | 51+85.12 | 9.63 | 592.92 | 592.94 |

## SOUTH EDGE OF NORTH LANE - EB

| Location | Station | Offset | Theoretical Grade Elevations | Theoretical Grade Elevations Adjusted For Dead Load Deflection and Grinding |
|---|---|---|---|---|
| ℄ PIER 2 EB | 41+68.45 | 12.00 | 602.56 | 602.58 |
| ℄ E BRG PIER 2 EB | 41+69.62 | 12.00 | 602.58 | 602.60 |
| 2A | 41+79.62 | 12.00 | 602.68 | 602.77 |
| 2B | 41+89.62 | 12.00 | 602.79 | 602.94 |
| 2C | 41+99.62 | 12.00 | 602.88 | 603.10 |
| 2D | 42+09.62 | 12.00 | 602.98 | 603.25 |
| 2E | 42+19.62 | 12.00 | 603.07 | 603.39 |
| 2F | 42+29.62 | 12.00 | 603.15 | 603.52 |
| 2G | 42+39.62 | 12.00 | 603.24 | 603.65 |
| 2H | 42+49.62 | 12.00 | 603.32 | 603.76 |
| 2I | 42+59.62 | 12.00 | 603.39 | 603.86 |
| 2J | 42+69.62 | 12.00 | 603.46 | 603.95 |
| 2K | 42+79.62 | 12.00 | 603.53 | 604.03 |
| 2L | 42+89.62 | 12.00 | 603.59 | 604.09 |
| 2M | 42+99.62 | 12.00 | 603.65 | 604.15 |
| 2N | 43+09.62 | 12.00 | 603.70 | 604.19 |
| 2O | 43+19.62 | 12.00 | 603.75 | 604.22 |
| 2P | 43+29.62 | 12.00 | 603.80 | 604.24 |
| 2Q | 43+39.62 | 12.00 | 603.84 | 604.25 |
| 2R | 43+49.62 | 12.00 | 603.88 | 604.26 |
| 2S | 43+59.62 | 12.00 | 603.91 | 604.25 |
| 2T | 43+69.62 | 12.00 | 603.94 | 604.24 |
| 2U | 43+79.62 | 12.00 | 603.97 | 604.22 |
| 2V | 43+89.62 | 12.00 | 603.99 | 604.19 |
| 2W | 43+99.62 | 12.00 | 604.01 | 604.17 |
| 2X | 44+09.62 | 12.00 | 604.03 | 604.14 |
| 2Y | 44+19.62 | 12.00 | 604.04 | 604.12 |
| 2Z | 44+29.62 | 12.00 | 604.04 | 604.10 |
| 2AA | 44+39.62 | 12.00 | 604.05 | 604.08 |
| 2AB | 44+49.62 | 12.00 | 604.04 | 604.07 |
| 2AC | 44+59.62 | 12.00 | 604.04 | 604.06 |
| ℄ BRG. PIER 3 EB | 44+69.62 | 12.00 | 604.03 | 604.05 |
| 2AD | 44+79.62 | 12.00 | 604.02 | 604.05 |
| 2AE | 44+89.62 | 12.00 | 604.00 | 604.06 |
| 2AF | 44+99.62 | 12.00 | 603.98 | 604.06 |
| 2AG | 45+09.62 | 12.00 | 603.95 | 604.07 |
| 2AH | 45+19.62 | 12.00 | 603.92 | 604.09 |
| 2AI | 45+29.62 | 12.00 | 603.89 | 604.10 |
| 2AJ | 45+39.62 | 12.00 | 603.85 | 604.12 |
| 2AK | 45+49.62 | 12.00 | 603.81 | 604.14 |
| 2AL | 45+59.62 | 12.00 | 603.76 | 604.15 |
| 2AM | 45+69.62 | 12.00 | 603.71 | 604.16 |
| 2AN | 45+79.62 | 12.00 | 603.66 | 604.16 |
| 2AO | 45+89.62 | 12.00 | 603.60 | 604.16 |
| 2AP | 45+99.62 | 12.00 | 603.54 | 604.15 |
| 2AQ | 46+09.62 | 12.00 | 603.47 | 604.13 |
| 2AR | 46+19.62 | 12.00 | 603.41 | 604.09 |
| 2AS | 46+29.62 | 12.00 | 603.33 | 604.05 |
| 2AT | 46+39.62 | 12.00 | 603.25 | 604.00 |
| 2AU | 46+49.62 | 12.00 | 603.17 | 603.94 |
| 2AV | 46+59.62 | 12.00 | 603.09 | 603.87 |
| 2AW | 46+69.62 | 12.00 | 603.00 | 603.79 |
| 2AX | 46+79.62 | 12.00 | 602.90 | 603.70 |
| 2AY | 46+89.62 | 12.00 | 602.81 | 603.60 |
| 2AZ | 46+99.62 | 12.00 | 602.70 | 603.48 |

## SOUTH EDGE OF NORTH LANE - EB (CONT.)

| Location | Station | Offset | Theoretical Grade Elevations | Theoretical Grade Elevations Adjusted For Dead Load Deflection and Grinding |
|---|---|---|---|---|
| 2BA | 47+09.62 | 12.00 | 602.60 | 603.36 |
| 2BB | 47+19.62 | 12.00 | 602.49 | 603.22 |
| 2BC | 47+29.62 | 12.00 | 602.38 | 603.08 |
| 2BD | 47+39.62 | 12.00 | 602.26 | 602.92 |
| 2BE | 47+49.62 | 12.00 | 602.14 | 602.76 |
| 2BF | 47+59.62 | 12.00 | 602.01 | 602.59 |
| 2BG | 47+69.62 | 12.00 | 601.88 | 602.40 |
| 2BH | 47+79.62 | 12.00 | 601.75 | 602.22 |
| 2BI | 47+89.62 | 12.00 | 601.61 | 602.02 |
| 2BJ | 47+99.62 | 12.00 | 601.47 | 601.82 |
| 2BK | 48+09.62 | 12.00 | 601.32 | 601.62 |
| 2BL | 48+19.62 | 12.00 | 601.17 | 601.41 |
| 2BM | 48+29.62 | 12.00 | 601.02 | 601.21 |
| 2BN | 48+39.62 | 12.00 | 600.86 | 601.00 |
| 2BO | 48+49.62 | 12.00 | 600.70 | 600.80 |
| 2BP | 48+59.62 | 12.00 | 600.54 | 600.60 |
| 2BQ | 48+69.62 | 12.00 | 600.37 | 600.41 |
| ℄ BRG. PIER 4 EB | 48+83.62 | 12.00 | 600.12 | 600.14 |
| 2BR | 48+93.62 | 12.00 | 599.94 | 599.96 |
| 2BS | 49+03.62 | 12.00 | 599.76 | 599.78 |
| 2BT | 49+13.62 | 12.00 | 599.57 | 599.61 |
| 2BU | 49+23.62 | 12.00 | 599.38 | 599.44 |
| 2BV | 49+33.62 | 12.00 | 599.19 | 599.27 |
| 2BW | 49+43.62 | 12.00 | 598.99 | 599.10 |
| 2BX | 49+53.62 | 12.00 | 598.78 | 598.94 |
| 2BY | 49+63.62 | 12.00 | 598.58 | 598.78 |
| 2BZ | 49+73.62 | 12.00 | 598.37 | 598.61 |
| 2CA | 49+83.62 | 12.00 | 598.15 | 598.44 |
| 2CB | 49+93.62 | 12.00 | 597.93 | 598.27 |
| 2CC | 50+03.62 | 12.00 | 597.71 | 598.09 |
| 2CD | 50+13.62 | 12.00 | 597.48 | 597.90 |
| 2CE | 50+23.62 | 12.00 | 597.25 | 597.70 |
| 2CF | 50+33.62 | 12.00 | 597.01 | 597.48 |
| 2CG | 50+43.62 | 12.00 | 596.78 | 597.26 |
| 2CH | 50+53.62 | 12.00 | 596.53 | 597.03 |
| 2CI | 50+63.62 | 12.00 | 596.29 | 596.79 |
| 2CJ | 50+73.62 | 12.00 | 596.03 | 596.53 |
| 2CK | 50+83.62 | 12.00 | 595.78 | 596.27 |
| 2CL | 50+93.62 | 12.00 | 595.52 | 595.99 |
| 2CM | 51+03.62 | 12.00 | 595.26 | 595.70 |
| 2CN | 51+13.62 | 12.00 | 594.99 | 595.40 |
| 2CO | 51+23.62 | 12.00 | 594.72 | 595.09 |
| 2CP | 51+33.62 | 12.00 | 594.44 | 594.77 |
| 2CQ | 51+43.62 | 12.00 | 594.16 | 594.43 |
| 2CR | 51+53.62 | 12.00 | 593.88 | 594.09 |
| 2CS | 51+63.62 | 12.00 | 593.59 | 593.74 |
| 2CT | 51+73.62 | 12.00 | 593.30 | 593.39 |
| ℄ W BRG PIER 5 EB | 51+83.62 | 12.00 | 593.01 | 593.03 |
| ℄ PIER 5 EB | 51+85.12 | 12.00 | 592.96 | 592.98 |

### NOTES:

1. All Elevations and Offsets are in feet.
2. Offsets are measured with respect to the I-80 EB PGL. Negative offsets are left and positive are right of the PGL.

# FOR INFORMATION ONLY

MODEL: Default
FILE NAME: pw://transystems-pw.bentley.com:transyscorp-pw1-hosted\Documents\Projects_2018\CH401\401180022\03-WSP\CAD\62W52-SF-3\Sheets\0998309-62W52-S037-DBE206.dgn

WSP USA Inc.
30 N. LASALLE STREET
SUITE 4200
CHICAGO, IL 60602
TEL: (312) 782-8150
FAX: (312) 782-1684

| | | | |
|---|---|---|---|
| USER NAME = USCP702533 | DESIGNED - LAS | REVISED - | |
| | CHECKED - TB | REVISED - | |
| PLOT SCALE = 100.000 ' / in. | DRAWN - GM | REVISED - | |
| PLOT DATE = 10/11/2024 | CHECKED - LAS | REVISED - | |

**STATE OF ILLINOIS**
**DEPARTMENT OF TRANSPORTATION**

**TOP OF SLAB ELEVATIONS - UNIT 2 EB**
**STRUCTURE NUMBER 099-8309 WB AND 099-8325 EB**

SHEET S-37 OF S-87 SHEETS

| F.A.I RTE. | SECTION | COUNTY | TOTAL SHEETS | SHEET NO. |
|---|---|---|---|---|
| I-80 | (99-3DEFP) HF 23 | WILL | 89 | 39 |
| | | CONTRACT NO. 62W52 | | |
| | ILLINOIS | FED. AID PROJECT | | |

## GIRDER E4

| Location | Station | Offset | Theoretical Grade Elevations | Theoretical Grade Elevations Adjusted For Dead Load Deflection and Grinding |
|---|---|---|---|---|
| ℄ PIER 2 EB | 41+68.45 | 19.21 | 602.67 | 602.69 |
| ℄ E BRG PIER 2 EB | 41+69.62 | 19.21 | 602.68 | 602.71 |
| 2A | 41+79.62 | 19.21 | 602.79 | 602.88 |
| 2B | 41+89.62 | 19.21 | 602.89 | 603.04 |
| 2C | 41+99.62 | 19.21 | 602.99 | 603.20 |
| 2D | 42+09.62 | 19.21 | 603.09 | 603.36 |
| 2E | 42+19.62 | 19.21 | 603.18 | 603.50 |
| 2F | 42+29.62 | 19.21 | 603.26 | 603.63 |
| 2G | 42+39.62 | 19.21 | 603.35 | 603.75 |
| 2H | 42+49.62 | 19.21 | 603.42 | 603.87 |
| 2I | 42+59.62 | 19.21 | 603.50 | 603.97 |
| 2J | 42+69.62 | 19.21 | 603.57 | 604.06 |
| 2K | 42+79.62 | 19.21 | 603.64 | 604.13 |
| 2L | 42+89.62 | 19.21 | 603.70 | 604.20 |
| 2M | 42+99.62 | 19.21 | 603.76 | 604.25 |
| 2N | 43+09.62 | 19.21 | 603.81 | 604.30 |
| 2O | 43+19.62 | 19.21 | 603.86 | 604.33 |
| 2P | 43+29.62 | 19.21 | 603.91 | 604.35 |
| 2Q | 43+39.62 | 19.21 | 603.95 | 604.36 |
| 2R | 43+49.62 | 19.21 | 603.99 | 604.37 |
| 2S | 43+59.62 | 19.21 | 604.02 | 604.36 |
| 2T | 43+69.62 | 19.21 | 604.05 | 604.34 |
| 2U | 43+79.62 | 19.21 | 604.08 | 604.32 |
| 2V | 43+89.62 | 19.21 | 604.10 | 604.30 |
| 2W | 43+99.62 | 19.21 | 604.12 | 604.28 |
| 2X | 44+09.62 | 19.21 | 604.13 | 604.25 |
| 2Y | 44+19.62 | 19.21 | 604.14 | 604.23 |
| 2Z | 44+29.62 | 19.21 | 604.15 | 604.21 |
| 2AA | 44+39.62 | 19.21 | 604.15 | 604.19 |
| 2AB | 44+49.62 | 19.21 | 604.15 | 604.18 |
| 2AC | 44+59.62 | 19.21 | 604.15 | 604.17 |
| ℄ BRG. PIER 3 EB | 44+69.62 | 19.21 | 604.14 | 604.16 |
| 2AD | 44+79.62 | 19.21 | 604.12 | 604.16 |
| 2AE | 44+89.62 | 19.21 | 604.11 | 604.16 |
| 2AF | 44+99.62 | 19.21 | 604.08 | 604.17 |
| 2AG | 45+09.62 | 19.21 | 604.06 | 604.18 |
| 2AH | 45+19.62 | 19.21 | 604.03 | 604.19 |
| 2AI | 45+29.62 | 19.21 | 604.00 | 604.21 |
| 2AJ | 45+39.62 | 19.21 | 603.96 | 604.23 |
| 2AK | 45+49.62 | 19.21 | 603.92 | 604.24 |
| 2AL | 45+59.62 | 19.21 | 603.87 | 604.26 |
| 2AM | 45+69.62 | 19.21 | 603.82 | 604.27 |
| 2AN | 45+79.62 | 19.21 | 603.77 | 604.27 |
| 2AO | 45+89.62 | 19.21 | 603.71 | 604.27 |
| 2AP | 45+99.62 | 19.21 | 603.65 | 604.25 |
| 2AQ | 46+09.62 | 19.21 | 603.58 | 604.23 |
| 2AR | 46+19.62 | 19.21 | 603.51 | 604.20 |
| 2AS | 46+29.62 | 19.21 | 603.44 | 604.16 |
| 2AT | 46+39.62 | 19.21 | 603.36 | 604.11 |
| 2AU | 46+49.62 | 19.21 | 603.28 | 604.05 |
| 2AV | 46+59.62 | 19.21 | 603.20 | 603.98 |
| 2AW | 46+69.62 | 19.21 | 603.11 | 603.90 |
| 2AX | 46+79.62 | 19.21 | 603.01 | 603.81 |
| 2AY | 46+89.62 | 19.21 | 602.91 | 603.70 |
| 2AZ | 46+99.62 | 19.21 | 602.81 | 603.59 |

## GIRDER E4 (CONT.)

| Location | Station | Offset | Theoretical Grade Elevations | Theoretical Grade Elevations Adjusted For Dead Load Deflection and Grinding |
|---|---|---|---|---|
| 2BA | 47+09.62 | 19.21 | 602.71 | 603.47 |
| 2BB | 47+19.62 | 19.21 | 602.60 | 603.33 |
| 2BC | 47+29.62 | 19.21 | 602.48 | 603.19 |
| 2BD | 47+39.62 | 19.21 | 602.37 | 603.03 |
| 2BE | 47+49.62 | 19.21 | 602.25 | 602.87 |
| 2BF | 47+59.62 | 19.21 | 602.12 | 602.69 |
| 2BG | 47+69.62 | 19.21 | 601.99 | 602.51 |
| 2BH | 47+79.62 | 19.21 | 601.86 | 602.32 |
| 2BI | 47+89.62 | 19.21 | 601.72 | 602.13 |
| 2BJ | 47+99.62 | 19.21 | 601.58 | 601.93 |
| 2BK | 48+09.62 | 19.21 | 601.43 | 601.72 |
| 2BL | 48+19.62 | 19.21 | 601.28 | 601.52 |
| 2BM | 48+29.62 | 19.21 | 601.13 | 601.31 |
| 2BN | 48+39.62 | 19.21 | 600.97 | 601.11 |
| 2BO | 48+49.62 | 19.21 | 600.81 | 600.91 |
| 2BP | 48+59.62 | 19.21 | 600.64 | 600.71 |
| 2BQ | 48+69.62 | 19.21 | 600.47 | 600.52 |
| ℄ BRG. PIER 4 EB | 48+83.62 | 19.21 | 600.23 | 600.25 |
| 2BR | 48+93.62 | 19.21 | 600.05 | 600.07 |
| 2BS | 49+03.62 | 19.21 | 599.87 | 599.89 |
| 2BT | 49+13.62 | 19.21 | 599.68 | 599.72 |
| 2BU | 49+23.62 | 19.21 | 599.49 | 599.54 |
| 2BV | 49+33.62 | 19.21 | 599.29 | 599.38 |
| 2BW | 49+43.62 | 19.21 | 599.10 | 599.21 |
| 2BX | 49+53.62 | 19.21 | 598.89 | 599.05 |
| 2BY | 49+63.62 | 19.21 | 598.68 | 598.89 |
| 2BZ | 49+73.62 | 19.21 | 598.47 | 598.72 |
| 2CA | 49+83.62 | 19.21 | 598.26 | 598.55 |
| 2CB | 49+93.62 | 19.21 | 598.04 | 598.38 |
| 2CC | 50+03.62 | 19.21 | 597.82 | 598.19 |
| 2CD | 50+13.62 | 19.21 | 597.59 | 598.00 |
| 2CE | 50+23.62 | 19.21 | 597.36 | 597.80 |
| 2CF | 50+33.62 | 19.21 | 597.12 | 597.59 |
| 2CG | 50+43.62 | 19.21 | 596.88 | 597.37 |
| 2CH | 50+53.62 | 19.21 | 596.64 | 597.14 |
| 2CI | 50+63.62 | 19.21 | 596.39 | 596.90 |
| 2CJ | 50+73.62 | 19.21 | 596.14 | 596.64 |
| 2CK | 50+83.62 | 19.21 | 595.89 | 596.38 |
| 2CL | 50+93.62 | 19.21 | 595.63 | 596.10 |
| 2CM | 51+03.62 | 19.21 | 595.36 | 595.81 |
| 2CN | 51+13.62 | 19.21 | 595.10 | 595.51 |
| 2CO | 51+23.62 | 19.21 | 594.83 | 595.20 |
| 2CP | 51+33.62 | 19.21 | 594.55 | 594.87 |
| 2CQ | 51+43.62 | 19.21 | 594.27 | 594.54 |
| 2CR | 51+53.62 | 19.21 | 593.99 | 594.20 |
| 2CS | 51+63.62 | 19.21 | 593.70 | 593.85 |
| 2CT | 51+73.62 | 19.21 | 593.41 | 593.50 |
| ℄ W BRG PIER 5 EB | 51+83.62 | 19.21 | 593.12 | 593.14 |
| ℄ PIER 5 EB | 51+85.12 | 19.21 | 593.07 | 593.09 |

## CROWN - EB

| Location | Station | Offset | Theoretical Grade Elevations | Theoretical Grade Elevations Adjusted For Dead Load Deflection and Grinding |
|---|---|---|---|---|
| ℄ PIER 2 EB | 41+68.45 | 24.00 | 602.74 | 602.76 |
| ℄ E BRG PIER 2 EB | 41+69.62 | 24.00 | 602.76 | 602.78 |
| 2A | 41+79.62 | 24.00 | 602.86 | 602.95 |
| 2B | 41+89.62 | 24.00 | 602.97 | 603.12 |
| 2C | 41+99.62 | 24.00 | 603.06 | 603.28 |
| 2D | 42+09.62 | 24.00 | 603.16 | 603.43 |
| 2E | 42+19.62 | 24.00 | 603.25 | 603.57 |
| 2F | 42+29.62 | 24.00 | 603.33 | 603.70 |
| 2G | 42+39.62 | 24.00 | 603.42 | 603.83 |
| 2H | 42+49.62 | 24.00 | 603.50 | 603.94 |
| 2I | 42+59.62 | 24.00 | 603.57 | 604.04 |
| 2J | 42+69.62 | 24.00 | 603.64 | 604.13 |
| 2K | 42+79.62 | 24.00 | 603.71 | 604.21 |
| 2L | 42+89.62 | 24.00 | 603.77 | 604.27 |
| 2M | 42+99.62 | 24.00 | 603.83 | 604.33 |
| 2N | 43+09.62 | 24.00 | 603.88 | 604.37 |
| 2O | 43+19.62 | 24.00 | 603.93 | 604.40 |
| 2P | 43+29.62 | 24.00 | 603.98 | 604.42 |
| 2Q | 43+39.62 | 24.00 | 604.02 | 604.43 |
| 2R | 43+49.62 | 24.00 | 604.06 | 604.44 |
| 2S | 43+59.62 | 24.00 | 604.09 | 604.43 |
| 2T | 43+69.62 | 24.00 | 604.12 | 604.42 |
| 2U | 43+79.62 | 24.00 | 604.15 | 604.40 |
| 2V | 43+89.62 | 24.00 | 604.17 | 604.37 |
| 2W | 43+99.62 | 24.00 | 604.19 | 604.35 |
| 2X | 44+09.62 | 24.00 | 604.21 | 604.32 |
| 2Y | 44+19.62 | 24.00 | 604.22 | 604.30 |
| 2Z | 44+29.62 | 24.00 | 604.22 | 604.28 |
| 2AA | 44+39.62 | 24.00 | 604.23 | 604.26 |
| 2AB | 44+49.62 | 24.00 | 604.22 | 604.25 |
| 2AC | 44+59.62 | 24.00 | 604.22 | 604.24 |
| ℄ BRG. PIER 3 EB | 44+69.62 | 24.00 | 604.21 | 604.23 |
| 2AD | 44+79.62 | 24.00 | 604.20 | 604.23 |
| 2AE | 44+89.62 | 24.00 | 604.18 | 604.24 |
| 2AF | 44+99.62 | 24.00 | 604.16 | 604.24 |
| 2AG | 45+09.62 | 24.00 | 604.13 | 604.25 |
| 2AH | 45+19.62 | 24.00 | 604.10 | 604.27 |
| 2AI | 45+29.62 | 24.00 | 604.07 | 604.28 |
| 2AJ | 45+39.62 | 24.00 | 604.03 | 604.30 |
| 2AK | 45+49.62 | 24.00 | 603.99 | 604.32 |
| 2AL | 45+59.62 | 24.00 | 603.94 | 604.33 |
| 2AM | 45+69.62 | 24.00 | 603.89 | 604.34 |
| 2AN | 45+79.62 | 24.00 | 603.84 | 604.34 |
| 2AO | 45+89.62 | 24.00 | 603.78 | 604.34 |
| 2AP | 45+99.62 | 24.00 | 603.72 | 604.33 |
| 2AQ | 46+09.62 | 24.00 | 603.65 | 604.31 |
| 2AR | 46+19.62 | 24.00 | 603.59 | 604.27 |
| 2AS | 46+29.62 | 24.00 | 603.51 | 604.23 |
| 2AT | 46+39.62 | 24.00 | 603.43 | 604.18 |
| 2AU | 46+49.62 | 24.00 | 603.35 | 604.12 |
| 2AV | 46+59.62 | 24.00 | 603.27 | 604.05 |
| 2AW | 46+69.62 | 24.00 | 603.18 | 603.97 |
| 2AX | 46+79.62 | 24.00 | 603.08 | 603.88 |
| 2AY | 46+89.62 | 24.00 | 602.99 | 603.78 |
| 2AZ | 46+99.62 | 24.00 | 602.88 | 603.66 |

### NOTES:

1. All Elevations and Offsets are in feet.
2. Offsets are measured with respect to the I-80 EB PGL. Negative offsets are left and positive are right of the PGL.

# FOR INFORMATION ONLY

MODEL: Default
FILE NAME: pw://transystems-pw.bentley.com:transyscorp-pw1-hosted/Documents/Projects_2018/CH401/401180022/03-WSP/CAD/62W52-SF-3/Sheets/0998309-62W52-S038-DEF207.dgn

WSP USA Inc.
30 N. LASALLE STREET
SUITE 4200
CHICAGO, IL 60602
TEL: (312) 782-8150
FAX: (312) 782-1684

| | | | |
|---|---|---|---|
| USER NAME = USCP702533 | DESIGNED - LAS | REVISED - | |
| | CHECKED - TB | REVISED - | |
| PLOT SCALE = 100.000 ' / in. | DRAWN - GM | REVISED - | |
| PLOT DATE = 10/11/2024 | CHECKED - LAS | REVISED - | |

**STATE OF ILLINOIS**
**DEPARTMENT OF TRANSPORTATION**

**TOP OF SLAB ELEVATIONS - UNIT 2 EB**
**STRUCTURE NUMBER 099-8309 WB AND 099-8325 EB**

SHEET S-38 OF S-87 SHEETS

| F.A.I RTE. | SECTION | COUNTY | TOTAL SHEETS | SHEET NO. |
|---|---|---|---|---|
| I-80 | (99-3DEFP) HF 23 | WILL | 89 | 40 |
| | | CONTRACT NO. 62W52 | | |
| | ILLINOIS | FED. AID PROJECT | | |

## CROWN - EB (CONT.)

| Location | Station | Offset | Theoretical Grade Elevations | Theoretical Grade Elevations Adjusted For Dead Load Deflection and Grinding |
|---|---|---|---|---|
| 2BA | 47+09.62 | 24.00 | 602.78 | 603.54 |
| 2BB | 47+19.62 | 24.00 | 602.67 | 603.40 |
| 2BC | 47+29.62 | 24.00 | 602.56 | 603.26 |
| 2BD | 47+39.62 | 24.00 | 602.44 | 603.10 |
| 2BE | 47+49.62 | 24.00 | 602.32 | 602.94 |
| 2BF | 47+59.62 | 24.00 | 602.19 | 602.77 |
| 2BG | 47+69.62 | 24.00 | 602.06 | 602.58 |
| 2BH | 47+79.62 | 24.00 | 601.93 | 602.40 |
| 2BI | 47+89.62 | 24.00 | 601.79 | 602.20 |
| 2BJ | 47+99.62 | 24.00 | 601.65 | 602.00 |
| 2BK | 48+09.62 | 24.00 | 601.50 | 601.80 |
| 2BL | 48+19.62 | 24.00 | 601.35 | 601.59 |
| 2BM | 48+29.62 | 24.00 | 601.20 | 601.39 |
| 2BN | 48+39.62 | 24.00 | 601.04 | 601.18 |
| 2BO | 48+49.62 | 24.00 | 600.88 | 600.98 |
| 2BP | 48+59.62 | 24.00 | 600.72 | 600.78 |
| 2BQ | 48+69.62 | 24.00 | 600.55 | 600.59 |
| ℄ BRG. PIER 4 EB | 48+83.62 | 24.00 | 600.30 | 600.32 |
| 2BR | 48+93.62 | 24.00 | 600.12 | 600.14 |
| 2BS | 49+03.62 | 24.00 | 599.94 | 599.96 |
| 2BT | 49+13.62 | 24.00 | 599.75 | 599.79 |
| 2BU | 49+23.62 | 24.00 | 599.56 | 599.62 |
| 2BV | 49+33.62 | 24.00 | 599.37 | 599.45 |
| 2BW | 49+43.62 | 24.00 | 599.17 | 599.28 |
| 2BX | 49+53.62 | 24.00 | 598.96 | 599.12 |
| 2BY | 49+63.62 | 24.00 | 598.76 | 598.96 |
| 2BZ | 49+73.62 | 24.00 | 598.55 | 598.79 |
| 2CA | 49+83.62 | 24.00 | 598.33 | 598.62 |
| 2CB | 49+93.62 | 24.00 | 598.11 | 598.45 |
| 2CC | 50+03.62 | 24.00 | 597.89 | 598.27 |
| 2CD | 50+13.62 | 24.00 | 597.66 | 598.08 |
| 2CE | 50+23.62 | 24.00 | 597.43 | 597.88 |
| 2CF | 50+33.62 | 24.00 | 597.19 | 597.66 |
| 2CG | 50+43.62 | 24.00 | 596.96 | 597.44 |
| 2CH | 50+53.62 | 24.00 | 596.71 | 597.21 |
| 2CI | 50+63.62 | 24.00 | 596.47 | 596.97 |
| 2CJ | 50+73.62 | 24.00 | 596.21 | 596.71 |
| 2CK | 50+83.62 | 24.00 | 595.96 | 596.45 |
| 2CL | 50+93.62 | 24.00 | 595.70 | 596.17 |
| 2CM | 51+03.62 | 24.00 | 595.44 | 595.88 |
| 2CN | 51+13.62 | 24.00 | 595.17 | 595.58 |
| 2CO | 51+23.62 | 24.00 | 594.90 | 595.27 |
| 2CP | 51+33.62 | 24.00 | 594.62 | 594.95 |
| 2CQ | 51+43.62 | 24.00 | 594.34 | 594.61 |
| 2CR | 51+53.62 | 24.00 | 594.06 | 594.27 |
| 2CS | 51+63.62 | 24.00 | 593.77 | 593.92 |
| 2CT | 51+73.62 | 24.00 | 593.48 | 593.57 |
| ℄ W BRG PIER 5 EB | 51+83.62 | 24.00 | 593.19 | 593.21 |
| ℄ PIER 5 EB | 51+85.12 | 24.00 | 593.14 | 593.16 |

## GIRDER E5

| Location | Station | Offset | Theoretical Grade Elevations | Theoretical Grade Elevations Adjusted For Dead Load Deflection and Grinding |
|---|---|---|---|---|
| ℄ PIER 2 EB | 41+68.45 | 28.79 | 602.67 | 602.69 |
| ℄ E BRG PIER 2 EB | 41+69.62 | 28.79 | 602.68 | 602.71 |
| 2A | 41+79.62 | 28.79 | 602.79 | 602.88 |
| 2B | 41+89.62 | 28.79 | 602.89 | 603.04 |
| 2C | 41+99.62 | 28.79 | 602.99 | 603.20 |
| 2D | 42+09.62 | 28.79 | 603.09 | 603.36 |
| 2E | 42+19.62 | 28.79 | 603.18 | 603.50 |
| 2F | 42+29.62 | 28.79 | 603.26 | 603.63 |
| 2G | 42+39.62 | 28.79 | 603.35 | 603.75 |
| 2H | 42+49.62 | 28.79 | 603.42 | 603.87 |
| 2I | 42+59.62 | 28.79 | 603.50 | 603.97 |
| 2J | 42+69.62 | 28.79 | 603.57 | 604.06 |
| 2K | 42+79.62 | 28.79 | 603.64 | 604.13 |
| 2L | 42+89.62 | 28.79 | 603.70 | 604.20 |
| 2M | 42+99.62 | 28.79 | 603.76 | 604.25 |
| 2N | 43+09.62 | 28.79 | 603.81 | 604.30 |
| 2O | 43+19.62 | 28.79 | 603.86 | 604.33 |
| 2P | 43+29.62 | 28.79 | 603.91 | 604.35 |
| 2Q | 43+39.62 | 28.79 | 603.95 | 604.36 |
| 2R | 43+49.62 | 28.79 | 603.99 | 604.37 |
| 2S | 43+59.62 | 28.79 | 604.02 | 604.36 |
| 2T | 43+69.62 | 28.79 | 604.05 | 604.34 |
| 2U | 43+79.62 | 28.79 | 604.08 | 604.32 |
| 2V | 43+89.62 | 28.79 | 604.10 | 604.30 |
| 2W | 43+99.62 | 28.79 | 604.12 | 604.28 |
| 2X | 44+09.62 | 28.79 | 604.13 | 604.25 |
| 2Y | 44+19.62 | 28.79 | 604.14 | 604.23 |
| 2Z | 44+29.62 | 28.79 | 604.15 | 604.21 |
| 2AA | 44+39.62 | 28.79 | 604.15 | 604.19 |
| 2AB | 44+49.62 | 28.79 | 604.15 | 604.18 |
| 2AC | 44+59.62 | 28.79 | 604.15 | 604.17 |
| ℄ BRG. PIER 3 EB | 44+69.62 | 28.79 | 604.14 | 604.16 |
| 2AD | 44+79.62 | 28.79 | 604.12 | 604.16 |
| 2AE | 44+89.62 | 28.79 | 604.11 | 604.16 |
| 2AF | 44+99.62 | 28.79 | 604.08 | 604.17 |
| 2AG | 45+09.62 | 28.79 | 604.06 | 604.18 |
| 2AH | 45+19.62 | 28.79 | 604.03 | 604.19 |
| 2AI | 45+29.62 | 28.79 | 604.00 | 604.21 |
| 2AJ | 45+39.62 | 28.79 | 603.96 | 604.23 |
| 2AK | 45+49.62 | 28.79 | 603.92 | 604.24 |
| 2AL | 45+59.62 | 28.79 | 603.87 | 604.26 |
| 2AM | 45+69.62 | 28.79 | 603.82 | 604.27 |
| 2AN | 45+79.62 | 28.79 | 603.77 | 604.27 |
| 2AO | 45+89.62 | 28.79 | 603.71 | 604.27 |
| 2AP | 45+99.62 | 28.79 | 603.65 | 604.25 |
| 2AQ | 46+09.62 | 28.79 | 603.58 | 604.23 |
| 2AR | 46+19.62 | 28.79 | 603.51 | 604.20 |
| 2AS | 46+29.62 | 28.79 | 603.44 | 604.16 |
| 2AT | 46+39.62 | 28.79 | 603.36 | 604.11 |
| 2AU | 46+49.62 | 28.79 | 603.28 | 604.05 |
| 2AV | 46+59.62 | 28.79 | 603.20 | 603.98 |
| 2AW | 46+69.62 | 28.79 | 603.11 | 603.90 |
| 2AX | 46+79.62 | 28.79 | 603.01 | 603.81 |
| 2AY | 46+89.62 | 28.79 | 602.91 | 603.70 |
| 2AZ | 46+99.62 | 28.79 | 602.81 | 603.59 |

## GIRDER E5 (CONT.)

| Location | Station | Offset | Theoretical Grade Elevations | Theoretical Grade Elevations Adjusted For Dead Load Deflection and Grinding |
|---|---|---|---|---|
| 2BA | 47+09.62 | 28.79 | 602.71 | 603.47 |
| 2BB | 47+19.62 | 28.79 | 602.60 | 603.33 |
| 2BC | 47+29.62 | 28.79 | 602.48 | 603.19 |
| 2BD | 47+39.62 | 28.79 | 602.37 | 603.03 |
| 2BE | 47+49.62 | 28.79 | 602.25 | 602.87 |
| 2BF | 47+59.62 | 28.79 | 602.12 | 602.69 |
| 2BG | 47+69.62 | 28.79 | 601.99 | 602.51 |
| 2BH | 47+79.62 | 28.79 | 601.86 | 602.32 |
| 2BI | 47+89.62 | 28.79 | 601.72 | 602.13 |
| 2BJ | 47+99.62 | 28.79 | 601.58 | 601.93 |
| 2BK | 48+09.62 | 28.79 | 601.43 | 601.72 |
| 2BL | 48+19.62 | 28.79 | 601.28 | 601.52 |
| 2BM | 48+29.62 | 28.79 | 601.13 | 601.31 |
| 2BN | 48+39.62 | 28.79 | 600.97 | 601.11 |
| 2BO | 48+49.62 | 28.79 | 600.81 | 600.91 |
| 2BP | 48+59.62 | 28.79 | 600.64 | 600.71 |
| 2BQ | 48+69.62 | 28.79 | 600.47 | 600.52 |
| ℄ BRG. PIER 4 EB | 48+83.62 | 28.79 | 600.23 | 600.25 |
| 2BR | 48+93.62 | 28.79 | 600.05 | 600.07 |
| 2BS | 49+03.62 | 28.79 | 599.87 | 599.89 |
| 2BT | 49+13.62 | 28.79 | 599.68 | 599.72 |
| 2BU | 49+23.62 | 28.79 | 599.49 | 599.54 |
| 2BV | 49+33.62 | 28.79 | 599.29 | 599.38 |
| 2BW | 49+43.62 | 28.79 | 599.10 | 599.21 |
| 2BX | 49+53.62 | 28.79 | 598.89 | 599.05 |
| 2BY | 49+63.62 | 28.79 | 598.68 | 598.89 |
| 2BZ | 49+73.62 | 28.79 | 598.47 | 598.72 |
| 2CA | 49+83.62 | 28.79 | 598.26 | 598.55 |
| 2CB | 49+93.62 | 28.79 | 598.04 | 598.38 |
| 2CC | 50+03.62 | 28.79 | 597.82 | 598.19 |
| 2CD | 50+13.62 | 28.79 | 597.59 | 598.00 |
| 2CE | 50+23.62 | 28.79 | 597.36 | 597.80 |
| 2CF | 50+33.62 | 28.79 | 597.12 | 597.59 |
| 2CG | 50+43.62 | 28.79 | 596.88 | 597.37 |
| 2CH | 50+53.62 | 28.79 | 596.64 | 597.14 |
| 2CI | 50+63.62 | 28.79 | 596.39 | 596.90 |
| 2CJ | 50+73.62 | 28.79 | 596.14 | 596.64 |
| 2CK | 50+83.62 | 28.79 | 595.89 | 596.38 |
| 2CL | 50+93.62 | 28.79 | 595.63 | 596.10 |
| 2CM | 51+03.62 | 28.79 | 595.36 | 595.81 |
| 2CN | 51+13.62 | 28.79 | 595.10 | 595.51 |
| 2CO | 51+23.62 | 28.79 | 594.83 | 595.20 |
| 2CP | 51+33.62 | 28.79 | 594.55 | 594.87 |
| 2CQ | 51+43.62 | 28.79 | 594.27 | 594.54 |
| 2CR | 51+53.62 | 28.79 | 593.99 | 594.20 |
| 2CS | 51+63.62 | 28.79 | 593.70 | 593.85 |
| 2CT | 51+73.62 | 28.79 | 593.41 | 593.50 |
| ℄ W BRG PIER 5 EB | 51+83.62 | 28.79 | 593.12 | 593.14 |
| ℄ PIER 5 EB | 51+85.12 | 28.79 | 593.07 | 593.09 |

### NOTES:

1. All Elevations and Offsets are in feet.
2. Offsets are measured with respect to the I-80 EB PGL. Negative offsets are left and positive are right of the PGL.

**FOR INFORMATION ONLY**

MODEL: Default
FILE NAME: pw://transystems-pw.bentley.com:transyscorp-pw1-hosted\Documents\Projects_2018\CH401\401180022\03-WSP\CAD\62W52-SF-3\Sheets\0998309-62W52-S039-DEF208.dgn

WSP USA Inc.
30 N. LASALLE STREET
SUITE 4200
CHICAGO, IL 60602
TEL: (312) 782-8150
FAX: (312) 782-1684

| | | | |
|---|---|---|---|
| USER NAME = USCP702533 | DESIGNED - LAS | REVISED - | |
| | CHECKED - TB | REVISED - | |
| PLOT SCALE = 100.000 ' / in. | DRAWN - GM | REVISED - | |
| PLOT DATE = 10/11/2024 | CHECKED - LAS | REVISED - | |

**STATE OF ILLINOIS**
**DEPARTMENT OF TRANSPORTATION**

**TOP OF SLAB ELEVATIONS - UNIT 2 EB**
**STRUCTURE NUMBER 099-8309 WB AND 099-8325 EB**

SHEET S-39 OF S-87 SHEETS

| F.A.I RTE. | SECTION | COUNTY | TOTAL SHEETS | SHEET NO. |
|---|---|---|---|---|
| I-80 | (99-3DEFP) HF 23 | WILL | 89 | 41 |
| | | CONTRACT NO. 62W52 | | |
| | ILLINOIS | FED. AID PROJECT | | |

## NORTH EDGE OF SOUTH LANE - EB

| Location | Station | Offset | Theoretical Grade Elevations | Theoretical Grade Elevations Adjusted For Dead Load Deflection and Grinding |
|---|---|---|---|---|
| ℄ PIER 2 EB | 41+68.45 | 36.00 | 602.56 | 602.58 |
| ℄ E BRG PIER 2 EB | 41+69.62 | 36.00 | 602.58 | 602.60 |
| 2A | 41+79.62 | 36.00 | 602.68 | 602.77 |
| 2B | 41+89.62 | 36.00 | 602.79 | 602.94 |
| 2C | 41+99.62 | 36.00 | 602.88 | 603.10 |
| 2D | 42+09.62 | 36.00 | 602.98 | 603.25 |
| 2E | 42+19.62 | 36.00 | 603.07 | 603.39 |
| 2F | 42+29.62 | 36.00 | 603.15 | 603.52 |
| 2G | 42+39.62 | 36.00 | 603.24 | 603.65 |
| 2H | 42+49.62 | 36.00 | 603.32 | 603.76 |
| 2I | 42+59.62 | 36.00 | 603.39 | 603.86 |
| 2J | 42+69.62 | 36.00 | 603.46 | 603.95 |
| 2K | 42+79.62 | 36.00 | 603.53 | 604.03 |
| 2L | 42+89.62 | 36.00 | 603.59 | 604.09 |
| 2M | 42+99.62 | 36.00 | 603.65 | 604.15 |
| 2N | 43+09.62 | 36.00 | 603.70 | 604.19 |
| 2O | 43+19.62 | 36.00 | 603.75 | 604.22 |
| 2P | 43+29.62 | 36.00 | 603.80 | 604.24 |
| 2Q | 43+39.62 | 36.00 | 603.84 | 604.25 |
| 2R | 43+49.62 | 36.00 | 603.88 | 604.26 |
| 2S | 43+59.62 | 36.00 | 603.91 | 604.25 |
| 2T | 43+69.62 | 36.00 | 603.94 | 604.24 |
| 2U | 43+79.62 | 36.00 | 603.97 | 604.22 |
| 2V | 43+89.62 | 36.00 | 603.99 | 604.19 |
| 2W | 43+99.62 | 36.00 | 604.01 | 604.17 |
| 2X | 44+09.62 | 36.00 | 604.03 | 604.14 |
| 2Y | 44+19.62 | 36.00 | 604.04 | 604.12 |
| 2Z | 44+29.62 | 36.00 | 604.04 | 604.10 |
| 2AA | 44+39.62 | 36.00 | 604.05 | 604.08 |
| 2AB | 44+49.62 | 36.00 | 604.04 | 604.07 |
| 2AC | 44+59.62 | 36.00 | 604.04 | 604.06 |
| ℄ BRG. PIER 3 EB | 44+69.62 | 36.00 | 604.03 | 604.05 |
| 2AD | 44+79.62 | 36.00 | 604.02 | 604.05 |
| 2AE | 44+89.62 | 36.00 | 604.00 | 604.06 |
| 2AF | 44+99.62 | 36.00 | 603.98 | 604.06 |
| 2AG | 45+09.62 | 36.00 | 603.95 | 604.07 |
| 2AH | 45+19.62 | 36.00 | 603.92 | 604.09 |
| 2AI | 45+29.62 | 36.00 | 603.89 | 604.10 |
| 2AJ | 45+39.62 | 36.00 | 603.85 | 604.12 |
| 2AK | 45+49.62 | 36.00 | 603.81 | 604.14 |
| 2AL | 45+59.62 | 36.00 | 603.76 | 604.15 |
| 2AM | 45+69.62 | 36.00 | 603.71 | 604.16 |
| 2AN | 45+79.62 | 36.00 | 603.66 | 604.16 |
| 2AO | 45+89.62 | 36.00 | 603.60 | 604.16 |
| 2AP | 45+99.62 | 36.00 | 603.54 | 604.15 |
| 2AQ | 46+09.62 | 36.00 | 603.47 | 604.13 |
| 2AR | 46+19.62 | 36.00 | 603.41 | 604.09 |
| 2AS | 46+29.62 | 36.00 | 603.33 | 604.05 |
| 2AT | 46+39.62 | 36.00 | 603.25 | 604.00 |
| 2AU | 46+49.62 | 36.00 | 603.17 | 603.94 |
| 2AV | 46+59.62 | 36.00 | 603.09 | 603.87 |
| 2AW | 46+69.62 | 36.00 | 603.00 | 603.79 |
| 2AX | 46+79.62 | 36.00 | 602.90 | 603.70 |
| 2AY | 46+89.62 | 36.00 | 602.81 | 603.60 |
| 2AZ | 46+99.62 | 36.00 | 602.70 | 603.48 |

## NORTH EDGE OF SOUTH LANE - EB (CONT.)

| Location | Station | Offset | Theoretical Grade Elevations | Theoretical Grade Elevations Adjusted For Dead Load Deflection and Grinding |
|---|---|---|---|---|
| 2BA | 47+09.62 | 36.00 | 602.60 | 603.36 |
| 2BB | 47+19.62 | 36.00 | 602.49 | 603.22 |
| 2BC | 47+29.62 | 36.00 | 602.38 | 603.08 |
| 2BD | 47+39.62 | 36.00 | 602.26 | 602.92 |
| 2BE | 47+49.62 | 36.00 | 602.14 | 602.76 |
| 2BF | 47+59.62 | 36.00 | 602.01 | 602.59 |
| 2BG | 47+69.62 | 36.00 | 601.88 | 602.40 |
| 2BH | 47+79.62 | 36.00 | 601.75 | 602.22 |
| 2BI | 47+89.62 | 36.00 | 601.61 | 602.02 |
| 2BJ | 47+99.62 | 36.00 | 601.47 | 601.82 |
| 2BK | 48+09.62 | 36.00 | 601.32 | 601.62 |
| 2BL | 48+19.62 | 36.00 | 601.17 | 601.41 |
| 2BM | 48+29.62 | 36.00 | 601.02 | 601.21 |
| 2BN | 48+39.62 | 36.00 | 600.86 | 601.00 |
| 2BO | 48+49.62 | 36.00 | 600.70 | 600.80 |
| 2BP | 48+59.62 | 36.00 | 600.54 | 600.60 |
| 2BQ | 48+69.62 | 36.00 | 600.37 | 600.41 |
| ℄ BRG. PIER 4 EB | 48+83.62 | 36.00 | 600.12 | 600.14 |
| 2BR | 48+93.62 | 36.00 | 599.94 | 599.96 |
| 2BS | 49+03.62 | 36.00 | 599.76 | 599.78 |
| 2BT | 49+13.62 | 36.00 | 599.57 | 599.61 |
| 2BU | 49+23.62 | 36.00 | 599.38 | 599.44 |
| 2BV | 49+33.62 | 36.00 | 599.19 | 599.27 |
| 2BW | 49+43.62 | 36.00 | 598.99 | 599.10 |
| 2BX | 49+53.62 | 36.00 | 598.78 | 598.94 |
| 2BY | 49+63.62 | 36.00 | 598.58 | 598.78 |
| 2BZ | 49+73.62 | 36.00 | 598.37 | 598.61 |
| 2CA | 49+83.62 | 36.00 | 598.15 | 598.44 |
| 2CB | 49+93.62 | 36.00 | 597.93 | 598.27 |
| 2CC | 50+03.62 | 36.00 | 597.71 | 598.09 |
| 2CD | 50+13.62 | 36.00 | 597.48 | 597.90 |
| 2CE | 50+23.62 | 36.00 | 597.25 | 597.70 |
| 2CF | 50+33.62 | 36.00 | 597.01 | 597.48 |
| 2CG | 50+43.62 | 36.00 | 596.78 | 597.26 |
| 2CH | 50+53.62 | 36.00 | 596.53 | 597.03 |
| 2CI | 50+63.62 | 36.00 | 596.29 | 596.79 |
| 2CJ | 50+73.62 | 36.00 | 596.03 | 596.53 |
| 2CK | 50+83.62 | 36.00 | 595.78 | 596.27 |
| 2CL | 50+93.62 | 36.00 | 595.52 | 595.99 |
| 2CM | 51+03.62 | 36.00 | 595.26 | 595.70 |
| 2CN | 51+13.62 | 36.00 | 594.99 | 595.40 |
| 2CO | 51+23.62 | 36.00 | 594.72 | 595.09 |
| 2CP | 51+33.62 | 36.00 | 594.44 | 594.77 |
| 2CQ | 51+43.62 | 36.00 | 594.16 | 594.43 |
| 2CR | 51+53.62 | 36.00 | 593.88 | 594.09 |
| 2CS | 51+63.62 | 36.00 | 593.59 | 593.74 |
| 2CT | 51+73.62 | 36.00 | 593.30 | 593.39 |
| ℄ W BRG PIER 5 EB | 51+83.62 | 36.00 | 593.01 | 593.03 |
| ℄ PIER 5 EB | 51+85.12 | 36.00 | 592.96 | 592.98 |

## GIRDER E6

| Location | Station | Offset | Theoretical Grade Elevations | Theoretical Grade Elevations Adjusted For Dead Load Deflection and Grinding |
|---|---|---|---|---|
| ℄ PIER 2 EB | 41+68.45 | 38.38 | 602.52 | 602.54 |
| ℄ E BRG PIER 2 EB | 41+69.62 | 38.38 | 602.53 | 602.55 |
| 2A | 41+79.62 | 38.38 | 602.64 | 602.72 |
| 2B | 41+89.62 | 38.38 | 602.74 | 602.89 |
| 2C | 41+99.62 | 38.38 | 602.84 | 603.05 |
| 2D | 42+09.62 | 38.38 | 602.93 | 603.20 |
| 2E | 42+19.62 | 38.38 | 603.02 | 603.34 |
| 2F | 42+29.62 | 38.38 | 603.11 | 603.48 |
| 2G | 42+39.62 | 38.38 | 603.19 | 603.60 |
| 2H | 42+49.62 | 38.38 | 603.27 | 603.71 |
| 2I | 42+59.62 | 38.38 | 603.34 | 603.81 |
| 2J | 42+69.62 | 38.38 | 603.41 | 603.90 |
| 2K | 42+79.62 | 38.38 | 603.48 | 603.98 |
| 2L | 42+89.62 | 38.38 | 603.54 | 604.04 |
| 2M | 42+99.62 | 38.38 | 603.60 | 604.10 |
| 2N | 43+09.62 | 38.38 | 603.65 | 604.14 |
| 2O | 43+19.62 | 38.38 | 603.71 | 604.17 |
| 2P | 43+29.62 | 38.38 | 603.75 | 604.20 |
| 2Q | 43+39.62 | 38.38 | 603.79 | 604.21 |
| 2R | 43+49.62 | 38.38 | 603.83 | 604.21 |
| 2S | 43+59.62 | 38.38 | 603.87 | 604.20 |
| 2T | 43+69.62 | 38.38 | 603.90 | 604.19 |
| 2U | 43+79.62 | 38.38 | 603.92 | 604.17 |
| 2V | 43+89.62 | 38.38 | 603.95 | 604.15 |
| 2W | 43+99.62 | 38.38 | 603.96 | 604.12 |
| 2X | 44+09.62 | 38.38 | 603.98 | 604.09 |
| 2Y | 44+19.62 | 38.38 | 603.99 | 604.07 |
| 2Z | 44+29.62 | 38.38 | 604.00 | 604.05 |
| 2AA | 44+39.62 | 38.38 | 604.00 | 604.03 |
| 2AB | 44+49.62 | 38.38 | 604.00 | 604.02 |
| 2AC | 44+59.62 | 38.38 | 603.99 | 604.01 |
| ℄ BRG. PIER 3 EB | 44+69.62 | 38.38 | 603.98 | 604.00 |
| 2AD | 44+79.62 | 38.38 | 603.97 | 604.00 |
| 2AE | 44+89.62 | 38.38 | 603.95 | 604.01 |
| 2AF | 44+99.62 | 38.38 | 603.93 | 604.02 |
| 2AG | 45+09.62 | 38.38 | 603.90 | 604.03 |
| 2AH | 45+19.62 | 38.38 | 603.87 | 604.04 |
| 2AI | 45+29.62 | 38.38 | 603.84 | 604.05 |
| 2AJ | 45+39.62 | 38.38 | 603.80 | 604.07 |
| 2AK | 45+49.62 | 38.38 | 603.76 | 604.09 |
| 2AL | 45+59.62 | 38.38 | 603.72 | 604.10 |
| 2AM | 45+69.62 | 38.38 | 603.67 | 604.11 |
| 2AN | 45+79.62 | 38.38 | 603.61 | 604.11 |
| 2AO | 45+89.62 | 38.38 | 603.55 | 604.11 |
| 2AP | 45+99.62 | 38.38 | 603.49 | 604.10 |
| 2AQ | 46+09.62 | 38.38 | 603.43 | 604.08 |
| 2AR | 46+19.62 | 38.38 | 603.36 | 604.05 |
| 2AS | 46+29.62 | 38.38 | 603.28 | 604.01 |
| 2AT | 46+39.62 | 38.38 | 603.21 | 603.96 |
| 2AU | 46+49.62 | 38.38 | 603.13 | 603.90 |
| 2AV | 46+59.62 | 38.38 | 603.04 | 603.82 |
| 2AW | 46+69.62 | 38.38 | 602.95 | 603.74 |
| 2AX | 46+79.62 | 38.38 | 602.86 | 603.65 |
| 2AY | 46+89.62 | 38.38 | 602.76 | 603.55 |
| 2AZ | 46+99.62 | 38.38 | 602.66 | 603.44 |

### NOTES:

1. All Elevations and Offsets are in feet.
2. Offsets are measured with respect to the I-80 EB PGL. Negative offsets are left and positive are right of the PGL.

# FOR INFORMATION ONLY

MODEL: Default
FILE NAME: pw://transystems-pw.bentley.com:transyscorp-pw1-hosted\Documents\Projects_2018\CH401\401180022\03-WSP\CAD\62W52-SF-3\Sheets\0998309-62W52-S040-DEF209.dgn

WSP USA Inc.
30 N. LASALLE STREET
SUITE 4200
CHICAGO, IL 60602
TEL: (312) 782-8150
FAX: (312) 782-1684

| | | | |
|---|---|---|---|
| USER NAME = USCP702533 | DESIGNED - LAS | REVISED - | |
| | CHECKED - TB | REVISED - | |
| PLOT SCALE = 100.000 ' / in. | DRAWN - GM | REVISED - | |
| PLOT DATE = 10/11/2024 | CHECKED - LAS | REVISED - | |

**STATE OF ILLINOIS**
**DEPARTMENT OF TRANSPORTATION**

**TOP OF SLAB ELEVATIONS - UNIT 2 EB**
**STRUCTURE NUMBER 099-8309 WB AND 099-8325 EB**

SHEET S-40 OF S-87 SHEETS

| F.A.I RTE. | SECTION | COUNTY | TOTAL SHEETS | SHEET NO. |
|---|---|---|---|---|
| I-80 | (99-3DEFP) HF 23 | WILL | 89 | 42 |
| | | CONTRACT NO. 62W52 | | |
| | ILLINOIS | FED. AID PROJECT | | |

## GIRDER E6 (CONT.)

| Location | Station | Offset | Theoretical Grade Elevations | Theoretical Grade Elevations Adjusted For Dead Load Deflection and Grinding |
|---|---|---|---|---|
| 2BA | 47+09.62 | 38.38 | 602.55 | 603.31 |
| 2BB | 47+19.62 | 38.38 | 602.44 | 603.18 |
| 2BC | 47+29.62 | 38.38 | 602.33 | 603.03 |
| 2BD | 47+39.62 | 38.38 | 602.21 | 602.88 |
| 2BE | 47+49.62 | 38.38 | 602.09 | 602.71 |
| 2BF | 47+59.62 | 38.38 | 601.96 | 602.54 |
| 2BG | 47+69.62 | 38.38 | 601.83 | 602.36 |
| 2BH | 47+79.62 | 38.38 | 601.70 | 602.17 |
| 2BI | 47+89.62 | 38.38 | 601.56 | 601.97 |
| 2BJ | 47+99.62 | 38.38 | 601.42 | 601.77 |
| 2BK | 48+09.62 | 38.38 | 601.28 | 601.57 |
| 2BL | 48+19.62 | 38.38 | 601.13 | 601.36 |
| 2BM | 48+29.62 | 38.38 | 600.97 | 601.16 |
| 2BN | 48+39.62 | 38.38 | 600.82 | 600.95 |
| 2BO | 48+49.62 | 38.38 | 600.65 | 600.75 |
| 2BP | 48+59.62 | 38.38 | 600.49 | 600.56 |
| 2BQ | 48+69.62 | 38.38 | 600.32 | 600.36 |
| ℄ BRG. PIER 4 EB | 48+83.62 | 38.38 | 600.07 | 600.10 |
| 2BR | 48+93.62 | 38.38 | 599.90 | 599.91 |
| 2BS | 49+03.62 | 38.38 | 599.71 | 599.74 |
| 2BT | 49+13.62 | 38.38 | 599.53 | 599.56 |
| 2BU | 49+23.62 | 38.38 | 599.33 | 599.39 |
| 2BV | 49+33.62 | 38.38 | 599.14 | 599.22 |
| 2BW | 49+43.62 | 38.38 | 598.94 | 599.06 |
| 2BX | 49+53.62 | 38.38 | 598.74 | 598.89 |
| 2BY | 49+63.62 | 38.38 | 598.53 | 598.73 |
| 2BZ | 49+73.62 | 38.38 | 598.32 | 598.56 |
| 2CA | 49+83.62 | 38.38 | 598.10 | 598.40 |
| 2CB | 49+93.62 | 38.38 | 597.88 | 598.22 |
| 2CC | 50+03.62 | 38.38 | 597.66 | 598.04 |
| 2CD | 50+13.62 | 38.38 | 597.43 | 597.85 |
| 2CE | 50+23.62 | 38.38 | 597.20 | 597.65 |
| 2CF | 50+33.62 | 38.38 | 596.97 | 597.44 |
| 2CG | 50+43.62 | 38.38 | 596.73 | 597.22 |
| 2CH | 50+53.62 | 38.38 | 596.48 | 596.99 |
| 2CI | 50+63.62 | 38.38 | 596.24 | 596.74 |
| 2CJ | 50+73.62 | 38.38 | 595.99 | 596.49 |
| 2CK | 50+83.62 | 38.38 | 595.73 | 596.22 |
| 2CL | 50+93.62 | 38.38 | 595.47 | 595.94 |
| 2CM | 51+03.62 | 38.38 | 595.21 | 595.65 |
| 2CN | 51+13.62 | 38.38 | 594.94 | 595.35 |
| 2CO | 51+23.62 | 38.38 | 594.67 | 595.04 |
| 2CP | 51+33.62 | 38.38 | 594.40 | 594.72 |
| 2CQ | 51+43.62 | 38.38 | 594.12 | 594.39 |
| 2CR | 51+53.62 | 38.38 | 593.83 | 594.05 |
| 2CS | 51+63.62 | 38.38 | 593.55 | 593.70 |
| 2CT | 51+73.62 | 38.38 | 593.25 | 593.34 |
| ℄ W BRG PIER 5 EB | 51+83.62 | 38.38 | 592.96 | 592.98 |
| ℄ PIER 5 EB | 51+85.12 | 38.38 | 592.92 | 592.94 |

## GIRDER E7

| Location | Station | Offset | Theoretical Grade Elevations | Theoretical Grade Elevations Adjusted For Dead Load Deflection and Grinding |
|---|---|---|---|---|
| ℄ PIER 2 EB | 41+68.45 | 47.96 | 602.32 | 602.35 |
| ℄ E BRG PIER 2 EB | 41+69.62 | 47.96 | 602.34 | 602.36 |
| 2A | 41+79.62 | 47.96 | 602.44 | 602.53 |
| 2B | 41+89.62 | 47.96 | 602.55 | 602.70 |
| 2C | 41+99.62 | 47.96 | 602.64 | 602.86 |
| 2D | 42+09.62 | 47.96 | 602.74 | 603.01 |
| 2E | 42+19.62 | 47.96 | 602.83 | 603.15 |
| 2F | 42+29.62 | 47.96 | 602.92 | 603.28 |
| 2G | 42+39.62 | 47.96 | 603.00 | 603.41 |
| 2H | 42+49.62 | 47.96 | 603.08 | 603.52 |
| 2I | 42+59.62 | 47.96 | 603.15 | 603.62 |
| 2J | 42+69.62 | 47.96 | 603.22 | 603.71 |
| 2K | 42+79.62 | 47.96 | 603.29 | 603.79 |
| 2L | 42+89.62 | 47.96 | 603.35 | 603.85 |
| 2M | 42+99.62 | 47.96 | 603.41 | 603.91 |
| 2N | 43+09.62 | 47.96 | 603.46 | 603.95 |
| 2O | 43+19.62 | 47.96 | 603.51 | 603.98 |
| 2P | 43+29.62 | 47.96 | 603.56 | 604.00 |
| 2Q | 43+39.62 | 47.96 | 603.60 | 604.02 |
| 2R | 43+49.62 | 47.96 | 603.64 | 604.02 |
| 2S | 43+59.62 | 47.96 | 603.68 | 604.01 |
| 2T | 43+69.62 | 47.96 | 603.71 | 604.00 |
| 2U | 43+79.62 | 47.96 | 603.73 | 603.98 |
| 2V | 43+89.62 | 47.96 | 603.75 | 603.95 |
| 2W | 43+99.62 | 47.96 | 603.77 | 603.93 |
| 2X | 44+09.62 | 47.96 | 603.79 | 603.90 |
| 2Y | 44+19.62 | 47.96 | 603.80 | 603.88 |
| 2Z | 44+29.62 | 47.96 | 603.80 | 603.86 |
| 2AA | 44+39.62 | 47.96 | 603.81 | 603.84 |
| 2AB | 44+49.62 | 47.96 | 603.80 | 603.83 |
| 2AC | 44+59.62 | 47.96 | 603.80 | 603.82 |
| ℄ BRG. PIER 3 EB | 44+69.62 | 47.96 | 603.79 | 603.81 |
| 2AD | 44+79.62 | 47.96 | 603.78 | 603.81 |
| 2AE | 44+89.62 | 47.96 | 603.76 | 603.82 |
| 2AF | 44+99.62 | 47.96 | 603.74 | 603.82 |
| 2AG | 45+09.62 | 47.96 | 603.71 | 603.83 |
| 2AH | 45+19.62 | 47.96 | 603.68 | 603.85 |
| 2AI | 45+29.62 | 47.96 | 603.65 | 603.86 |
| 2AJ | 45+39.62 | 47.96 | 603.61 | 603.88 |
| 2AK | 45+49.62 | 47.96 | 603.57 | 603.90 |
| 2AL | 45+59.62 | 47.96 | 603.52 | 603.91 |
| 2AM | 45+69.62 | 47.96 | 603.47 | 603.92 |
| 2AN | 45+79.62 | 47.96 | 603.42 | 603.92 |
| 2AO | 45+89.62 | 47.96 | 603.36 | 603.92 |
| 2AP | 45+99.62 | 47.96 | 603.30 | 603.91 |
| 2AQ | 46+09.62 | 47.96 | 603.24 | 603.89 |
| 2AR | 46+19.62 | 47.96 | 603.17 | 603.85 |
| 2AS | 46+29.62 | 47.96 | 603.09 | 603.81 |
| 2AT | 46+39.62 | 47.96 | 603.02 | 603.77 |
| 2AU | 46+49.62 | 47.96 | 602.93 | 603.70 |
| 2AV | 46+59.62 | 47.96 | 602.85 | 603.63 |
| 2AW | 46+69.62 | 47.96 | 602.76 | 603.55 |
| 2AX | 46+79.62 | 47.96 | 602.66 | 603.46 |
| 2AY | 46+89.62 | 47.96 | 602.57 | 603.36 |
| 2AZ | 46+99.62 | 47.96 | 602.47 | 603.24 |

## GIRDER E7 (CONT.)

| Location | Station | Offset | Theoretical Grade Elevations | Theoretical Grade Elevations Adjusted For Dead Load Deflection and Grinding |
|---|---|---|---|---|
| 2BA | 47+09.62 | 47.96 | 602.36 | 603.12 |
| 2BB | 47+19.62 | 47.96 | 602.25 | 602.98 |
| 2BC | 47+29.62 | 47.96 | 602.14 | 602.84 |
| 2BD | 47+39.62 | 47.96 | 602.02 | 602.69 |
| 2BE | 47+49.62 | 47.96 | 601.90 | 602.52 |
| 2BF | 47+59.62 | 47.96 | 601.77 | 602.35 |
| 2BG | 47+69.62 | 47.96 | 601.64 | 602.17 |
| 2BH | 47+79.62 | 47.96 | 601.51 | 601.98 |
| 2BI | 47+89.62 | 47.96 | 601.37 | 601.78 |
| 2BJ | 47+99.62 | 47.96 | 601.23 | 601.58 |
| 2BK | 48+09.62 | 47.96 | 601.08 | 601.38 |
| 2BL | 48+19.62 | 47.96 | 600.93 | 601.17 |
| 2BM | 48+29.62 | 47.96 | 600.78 | 600.97 |
| 2BN | 48+39.62 | 47.96 | 600.62 | 600.76 |
| 2BO | 48+49.62 | 47.96 | 600.46 | 600.56 |
| 2BP | 48+59.62 | 47.96 | 600.30 | 600.37 |
| 2BQ | 48+69.62 | 47.96 | 600.13 | 600.17 |
| ℄ BRG. PIER 4 EB | 48+83.62 | 47.96 | 599.88 | 599.90 |
| 2BR | 48+93.62 | 47.96 | 599.70 | 599.72 |
| 2BS | 49+03.62 | 47.96 | 599.52 | 599.54 |
| 2BT | 49+13.62 | 47.96 | 599.33 | 599.37 |
| 2BU | 49+23.62 | 47.96 | 599.14 | 599.20 |
| 2BV | 49+33.62 | 47.96 | 598.95 | 599.03 |
| 2BW | 49+43.62 | 47.96 | 598.75 | 598.86 |
| 2BX | 49+53.62 | 47.96 | 598.54 | 598.70 |
| 2BY | 49+63.62 | 47.96 | 598.34 | 598.54 |
| 2BZ | 49+73.62 | 47.96 | 598.13 | 598.37 |
| 2CA | 49+83.62 | 47.96 | 597.91 | 598.20 |
| 2CB | 49+93.62 | 47.96 | 597.69 | 598.03 |
| 2CC | 50+03.62 | 47.96 | 597.47 | 597.85 |
| 2CD | 50+13.62 | 47.96 | 597.24 | 597.66 |
| 2CE | 50+23.62 | 47.96 | 597.01 | 597.46 |
| 2CF | 50+33.62 | 47.96 | 596.78 | 597.25 |
| 2CG | 50+43.62 | 47.96 | 596.54 | 597.02 |
| 2CH | 50+53.62 | 47.96 | 596.29 | 596.79 |
| 2CI | 50+63.62 | 47.96 | 596.05 | 596.55 |
| 2CJ | 50+73.62 | 47.96 | 595.79 | 596.30 |
| 2CK | 50+83.62 | 47.96 | 595.54 | 596.03 |
| 2CL | 50+93.62 | 47.96 | 595.28 | 595.75 |
| 2CM | 51+03.62 | 47.96 | 595.02 | 595.46 |
| 2CN | 51+13.62 | 47.96 | 594.75 | 595.16 |
| 2CO | 51+23.62 | 47.96 | 594.48 | 594.85 |
| 2CP | 51+33.62 | 47.96 | 594.20 | 594.53 |
| 2CQ | 51+43.62 | 47.96 | 593.92 | 594.19 |
| 2CR | 51+53.62 | 47.96 | 593.64 | 593.85 |
| 2CS | 51+63.62 | 47.96 | 593.35 | 593.51 |
| 2CT | 51+73.62 | 47.96 | 593.06 | 593.15 |
| ℄ W BRG PIER 5 EB | 51+83.62 | 47.96 | 592.77 | 592.79 |
| ℄ PIER 5 EB | 51+85.12 | 47.96 | 592.72 | 592.74 |

### NOTES:

1. All Elevations and Offsets are in feet.
2. Offsets are measured with respect to the I-80 EB PGL. Negative offsets are left and positive are right of the PGL.

**FOR INFORMATION ONLY**

MODEL: Default
FILE NAME: pw://transystems-pw.bentley.com:transyscorp-pw1-hosted/Documents/Projects_2018/CH401/401180022/03-WSP/CAD/62W52-SF-3/Sheets/0998309-62W52-S041-DEF210.dgn

WSP USA Inc.
30 N. LASALLE STREET
SUITE 4200
CHICAGO, IL 60602
TEL: (312) 782-8150
FAX: (312) 782-1684

| | | | |
|---|---|---|---|
| USER NAME = USCP702533 | DESIGNED - LAS | REVISED - | |
| | CHECKED - TB | REVISED - | |
| PLOT SCALE = 100.000 ' / in. | DRAWN - GM | REVISED - | |
| PLOT DATE = 10/11/2024 | CHECKED - LAS | REVISED - | |

**STATE OF ILLINOIS**
**DEPARTMENT OF TRANSPORTATION**

**TOP OF SLAB ELEVATIONS - UNIT 2 EB**
**STRUCTURE NUMBER 099-8309 WB AND 099-8325 EB**

SHEET S-41 OF S-87 SHEETS

| F.A.I RTE. | SECTION | COUNTY | TOTAL SHEETS | SHEET NO. |
|---|---|---|---|---|
| I-80 | (99-3DEFP) HF 23 | WILL | 89 | 43 |
| | | CONTRACT NO. 62W52 | | |
| | ILLINOIS | FED. AID PROJECT | | |

## GIRDER E8

| Location | Station | Offset | Theoretical Grade Elevations | Theoretical Grade Elevations Adjusted For Dead Load Deflection and Grinding |
|---|---|---|---|---|
| ℄ PIER 2 EB | 41+68.45 | 57.54 | 602.13 | 602.15 |
| ℄ E BRG PIER 2 EB | 41+69.62 | 57.54 | 602.15 | 602.17 |
| 2A | 41+79.62 | 57.54 | 602.25 | 602.34 |
| 2B | 41+89.62 | 57.54 | 602.35 | 602.50 |
| 2C | 41+99.62 | 57.54 | 602.45 | 602.66 |
| 2D | 42+09.62 | 57.54 | 602.55 | 602.82 |
| 2E | 42+19.62 | 57.54 | 602.64 | 602.96 |
| 2F | 42+29.62 | 57.54 | 602.72 | 603.09 |
| 2G | 42+39.62 | 57.54 | 602.81 | 603.22 |
| 2H | 42+49.62 | 57.54 | 602.88 | 603.33 |
| 2I | 42+59.62 | 57.54 | 602.96 | 603.43 |
| 2J | 42+69.62 | 57.54 | 603.03 | 603.52 |
| 2K | 42+79.62 | 57.54 | 603.10 | 603.59 |
| 2L | 42+89.62 | 57.54 | 603.16 | 603.66 |
| 2M | 42+99.62 | 57.54 | 603.22 | 603.72 |
| 2N | 43+09.62 | 57.54 | 603.27 | 603.76 |
| 2O | 43+19.62 | 57.54 | 603.32 | 603.79 |
| 2P | 43+29.62 | 57.54 | 603.37 | 603.81 |
| 2Q | 43+39.62 | 57.54 | 603.41 | 603.82 |
| 2R | 43+49.62 | 57.54 | 603.45 | 603.83 |
| 2S | 43+59.62 | 57.54 | 603.48 | 603.82 |
| 2T | 43+69.62 | 57.54 | 603.51 | 603.81 |
| 2U | 43+79.62 | 57.54 | 603.54 | 603.79 |
| 2V | 43+89.62 | 57.54 | 603.56 | 603.76 |
| 2W | 43+99.62 | 57.54 | 603.58 | 603.74 |
| 2X | 44+09.62 | 57.54 | 603.60 | 603.71 |
| 2Y | 44+19.62 | 57.54 | 603.61 | 603.69 |
| 2Z | 44+29.62 | 57.54 | 603.61 | 603.67 |
| 2AA | 44+39.62 | 57.54 | 603.61 | 603.65 |
| 2AB | 44+49.62 | 57.54 | 603.61 | 603.64 |
| 2AC | 44+59.62 | 57.54 | 603.61 | 603.63 |
| ℄ BRG. PIER 3 EB | 44+69.62 | 57.54 | 603.60 | 603.62 |
| 2AD | 44+79.62 | 57.54 | 603.58 | 603.62 |
| 2AE | 44+89.62 | 57.54 | 603.57 | 603.62 |
| 2AF | 44+99.62 | 57.54 | 603.55 | 603.63 |
| 2AG | 45+09.62 | 57.54 | 603.52 | 603.64 |
| 2AH | 45+19.62 | 57.54 | 603.49 | 603.66 |
| 2AI | 45+29.62 | 57.54 | 603.46 | 603.67 |
| 2AJ | 45+39.62 | 57.54 | 603.42 | 603.69 |
| 2AK | 45+49.62 | 57.54 | 603.38 | 603.70 |
| 2AL | 45+59.62 | 57.54 | 603.33 | 603.72 |
| 2AM | 45+69.62 | 57.54 | 603.28 | 603.73 |
| 2AN | 45+79.62 | 57.54 | 603.23 | 603.73 |
| 2AO | 45+89.62 | 57.54 | 603.17 | 603.73 |
| 2AP | 45+99.62 | 57.54 | 603.11 | 603.71 |
| 2AQ | 46+09.62 | 57.54 | 603.04 | 603.69 |
| 2AR | 46+19.62 | 57.54 | 602.97 | 603.66 |
| 2AS | 46+29.62 | 57.54 | 602.90 | 603.62 |
| 2AT | 46+39.62 | 57.54 | 602.82 | 603.57 |
| 2AU | 46+49.62 | 57.54 | 602.74 | 603.51 |
| 2AV | 46+59.62 | 57.54 | 602.66 | 603.44 |
| 2AW | 46+69.62 | 57.54 | 602.57 | 603.36 |
| 2AX | 46+79.62 | 57.54 | 602.47 | 603.27 |
| 2AY | 46+89.62 | 57.54 | 602.38 | 603.17 |
| 2AZ | 46+99.62 | 57.54 | 602.27 | 603.05 |

## GIRDER E8 (CONT.)

| Location | Station | Offset | Theoretical Grade Elevations | Theoretical Grade Elevations Adjusted For Dead Load Deflection and Grinding |
|---|---|---|---|---|
| 2BA | 47+09.62 | 57.54 | 602.17 | 602.93 |
| 2BB | 47+19.62 | 57.54 | 602.06 | 602.79 |
| 2BC | 47+29.62 | 57.54 | 601.95 | 602.65 |
| 2BD | 47+39.62 | 57.54 | 601.83 | 602.49 |
| 2BE | 47+49.62 | 57.54 | 601.71 | 602.33 |
| 2BF | 47+59.62 | 57.54 | 601.58 | 602.16 |
| 2BG | 47+69.62 | 57.54 | 601.45 | 601.97 |
| 2BH | 47+79.62 | 57.54 | 601.32 | 601.78 |
| 2BI | 47+89.62 | 57.54 | 601.18 | 601.59 |
| 2BJ | 47+99.62 | 57.54 | 601.04 | 601.39 |
| 2BK | 48+09.62 | 57.54 | 600.89 | 601.18 |
| 2BL | 48+19.62 | 57.54 | 600.74 | 600.98 |
| 2BM | 48+29.62 | 57.54 | 600.59 | 600.77 |
| 2BN | 48+39.62 | 57.54 | 600.43 | 600.57 |
| 2BO | 48+49.62 | 57.54 | 600.27 | 600.37 |
| 2BP | 48+59.62 | 57.54 | 600.10 | 600.17 |
| 2BQ | 48+69.62 | 57.54 | 599.94 | 599.98 |
| ℄ BRG. PIER 4 EB | 48+83.62 | 57.54 | 599.69 | 599.71 |
| 2BR | 48+93.62 | 57.54 | 599.51 | 599.53 |
| 2BS | 49+03.62 | 57.54 | 599.33 | 599.35 |
| 2BT | 49+13.62 | 57.54 | 599.14 | 599.18 |
| 2BU | 49+23.62 | 57.54 | 598.95 | 599.01 |
| 2BV | 49+33.62 | 57.54 | 598.76 | 598.84 |
| 2BW | 49+43.62 | 57.54 | 598.56 | 598.67 |
| 2BX | 49+53.62 | 57.54 | 598.35 | 598.51 |
| 2BY | 49+63.62 | 57.54 | 598.15 | 598.35 |
| 2BZ | 49+73.62 | 57.54 | 597.93 | 598.18 |
| 2CA | 49+83.62 | 57.54 | 597.72 | 598.01 |
| 2CB | 49+93.62 | 57.54 | 597.50 | 597.84 |
| 2CC | 50+03.62 | 57.54 | 597.28 | 597.66 |
| 2CD | 50+13.62 | 57.54 | 597.05 | 597.46 |
| 2CE | 50+23.62 | 57.54 | 596.82 | 597.26 |
| 2CF | 50+33.62 | 57.54 | 596.58 | 597.05 |
| 2CG | 50+43.62 | 57.54 | 596.34 | 596.83 |
| 2CH | 50+53.62 | 57.54 | 596.10 | 596.60 |
| 2CI | 50+63.62 | 57.54 | 595.85 | 596.36 |
| 2CJ | 50+73.62 | 57.54 | 595.60 | 596.10 |
| 2CK | 50+83.62 | 57.54 | 595.35 | 595.84 |
| 2CL | 50+93.62 | 57.54 | 595.09 | 595.56 |
| 2CM | 51+03.62 | 57.54 | 594.83 | 595.27 |
| 2CN | 51+13.62 | 57.54 | 594.56 | 594.97 |
| 2CO | 51+23.62 | 57.54 | 594.29 | 594.66 |
| 2CP | 51+33.62 | 57.54 | 594.01 | 594.33 |
| 2CQ | 51+43.62 | 57.54 | 593.73 | 594.00 |
| 2CR | 51+53.62 | 57.54 | 593.45 | 593.66 |
| 2CS | 51+63.62 | 57.54 | 593.16 | 593.31 |
| 2CT | 51+73.62 | 57.54 | 592.87 | 592.96 |
| ℄ W BRG PIER 5 EB | 51+83.62 | 57.54 | 592.58 | 592.60 |
| ℄ PIER 5 EB | 51+85.12 | 57.54 | 592.53 | 592.55 |

## INSIDE FACE OF SOUTH PARAPET - EB

| Location | Station | Offset | Theoretical Grade Elevations | Theoretical Grade Elevations Adjusted For Dead Load Deflection and Grinding |
|---|---|---|---|---|
| ℄ PIER 2 EB | 41+68.45 | 60.00 | 602.08 | 602.10 |
| ℄ E BRG PIER 2 EB | 41+69.62 | 60.00 | 602.10 | 602.12 |
| 2A | 41+79.62 | 60.00 | 602.20 | 602.29 |
| 2B | 41+89.62 | 60.00 | 602.31 | 602.46 |
| 2C | 41+99.62 | 60.00 | 602.40 | 602.62 |
| 2D | 42+09.62 | 60.00 | 602.50 | 602.77 |
| 2E | 42+19.62 | 60.00 | 602.59 | 602.91 |
| 2F | 42+29.62 | 60.00 | 602.67 | 603.04 |
| 2G | 42+39.62 | 60.00 | 602.76 | 603.17 |
| 2H | 42+49.62 | 60.00 | 602.84 | 603.28 |
| 2I | 42+59.62 | 60.00 | 602.91 | 603.38 |
| 2J | 42+69.62 | 60.00 | 602.98 | 603.47 |
| 2K | 42+79.62 | 60.00 | 603.05 | 603.55 |
| 2L | 42+89.62 | 60.00 | 603.11 | 603.61 |
| 2M | 42+99.62 | 60.00 | 603.17 | 603.67 |
| 2N | 43+09.62 | 60.00 | 603.22 | 603.71 |
| 2O | 43+19.62 | 60.00 | 603.27 | 603.74 |
| 2P | 43+29.62 | 60.00 | 603.32 | 603.76 |
| 2Q | 43+39.62 | 60.00 | 603.36 | 603.77 |
| 2R | 43+49.62 | 60.00 | 603.40 | 603.78 |
| 2S | 43+59.62 | 60.00 | 603.43 | 603.77 |
| 2T | 43+69.62 | 60.00 | 603.46 | 603.76 |
| 2U | 43+79.62 | 60.00 | 603.49 | 603.74 |
| 2V | 43+89.62 | 60.00 | 603.51 | 603.71 |
| 2W | 43+99.62 | 60.00 | 603.53 | 603.69 |
| 2X | 44+09.62 | 60.00 | 603.55 | 603.66 |
| 2Y | 44+19.62 | 60.00 | 603.56 | 603.64 |
| 2Z | 44+29.62 | 60.00 | 603.56 | 603.62 |
| 2AA | 44+39.62 | 60.00 | 603.57 | 603.60 |
| 2AB | 44+49.62 | 60.00 | 603.56 | 603.59 |
| 2AC | 44+59.62 | 60.00 | 603.56 | 603.58 |
| ℄ BRG. PIER 3 EB | 44+69.62 | 60.00 | 603.55 | 603.57 |
| 2AD | 44+79.62 | 60.00 | 603.54 | 603.57 |
| 2AE | 44+89.62 | 60.00 | 603.52 | 603.58 |
| 2AF | 44+99.62 | 60.00 | 603.50 | 603.58 |
| 2AG | 45+09.62 | 60.00 | 603.47 | 603.59 |
| 2AH | 45+19.62 | 60.00 | 603.44 | 603.61 |
| 2AI | 45+29.62 | 60.00 | 603.41 | 603.62 |
| 2AJ | 45+39.62 | 60.00 | 603.37 | 603.64 |
| 2AK | 45+49.62 | 60.00 | 603.33 | 603.66 |
| 2AL | 45+59.62 | 60.00 | 603.28 | 603.67 |
| 2AM | 45+69.62 | 60.00 | 603.23 | 603.68 |
| 2AN | 45+79.62 | 60.00 | 603.18 | 603.68 |
| 2AO | 45+89.62 | 60.00 | 603.12 | 603.68 |
| 2AP | 45+99.62 | 60.00 | 603.06 | 603.67 |
| 2AQ | 46+09.62 | 60.00 | 602.99 | 603.65 |
| 2AR | 46+19.62 | 60.00 | 602.93 | 603.61 |
| 2AS | 46+29.62 | 60.00 | 602.85 | 603.57 |
| 2AT | 46+39.62 | 60.00 | 602.77 | 603.52 |
| 2AU | 46+49.62 | 60.00 | 602.69 | 603.46 |
| 2AV | 46+59.62 | 60.00 | 602.61 | 603.39 |
| 2AW | 46+69.62 | 60.00 | 602.52 | 603.31 |
| 2AX | 46+79.62 | 60.00 | 602.42 | 603.22 |
| 2AY | 46+89.62 | 60.00 | 602.33 | 603.12 |
| 2AZ | 46+99.62 | 60.00 | 602.22 | 603.00 |

### NOTES:

1. All Elevations and Offsets are in feet.
2. Offsets are measured with respect to the I-80 EB PGL. Negative offsets are left and positive are right of the PGL.

# FOR INFORMATION ONLY

MODEL: Default
FILE NAME: pw://transystems-pw.bentley.com:transyscorp-pw1-hosted/Documents/Projects_2018/CH401/401180022/03-WSP/CAD/62W52-SF-3/Sheets/0998309-E2W52-S042-DBE211.dgn

WSP USA Inc.
30 N. LASALLE STREET
SUITE 4200
CHICAGO, IL 60602
TEL: (312) 782-8150
FAX: (312) 782-1684

| | | | |
|---|---|---|---|
| USER NAME = USCP702533 | DESIGNED - LAS | REVISED - | |
| | CHECKED - TB | REVISED - | |
| PLOT SCALE = 100.000 ' / in. | DRAWN - GM | REVISED - | |
| PLOT DATE = 10/11/2024 | CHECKED - LAS | REVISED - | |

**STATE OF ILLINOIS**
**DEPARTMENT OF TRANSPORTATION**

**TOP OF SLAB ELEVATIONS - UNIT 2 EB**
**STRUCTURE NUMBER 099-8309 WB AND 099-8325 EB**

SHEET S-42 OF S-87 SHEETS

| F.A.I RTE. | SECTION | COUNTY | TOTAL SHEETS | SHEET NO. |
|---|---|---|---|---|
| I-80 | (99-3DEFP) HF 23 | WILL | 89 | 44 |
| | | CONTRACT NO. 62W52 | | |
| | ILLINOIS | FED. AID PROJECT | | |

## INSIDE FACE OF SOUTH PARAPET - EB (CONT.)

| Location | Station | Offset | Theoretical Grade Elevations | Theoretical Grade Elevations Adjusted For Dead Load Deflection and Grinding |
|---|---|---|---|---|
| 2BA | 47+09.62 | 60.00 | 602.12 | 602.88 |
| 2BB | 47+19.62 | 60.00 | 602.01 | 602.74 |
| 2BC | 47+29.62 | 60.00 | 601.90 | 602.60 |
| 2BD | 47+39.62 | 60.00 | 601.78 | 602.44 |
| 2BE | 47+49.62 | 60.00 | 601.66 | 602.28 |
| 2BF | 47+59.62 | 60.00 | 601.53 | 602.11 |
| 2BG | 47+69.62 | 60.00 | 601.40 | 601.92 |
| 2BH | 47+79.62 | 60.00 | 601.27 | 601.74 |
| 2BI | 47+89.62 | 60.00 | 601.13 | 601.54 |
| 2BJ | 47+99.62 | 60.00 | 600.99 | 601.34 |
| 2BK | 48+09.62 | 60.00 | 600.84 | 601.14 |
| 2BL | 48+19.62 | 60.00 | 600.69 | 600.93 |
| 2BM | 48+29.62 | 60.00 | 600.54 | 600.73 |
| 2BN | 48+39.62 | 60.00 | 600.38 | 600.52 |
| 2BO | 48+49.62 | 60.00 | 600.22 | 600.32 |
| 2BP | 48+59.62 | 60.00 | 600.06 | 600.12 |
| 2BQ | 48+69.62 | 60.00 | 599.89 | 599.93 |
| ℄ BRG. PIER 4 EB | 48+83.62 | 60.00 | 599.64 | 599.66 |
| 2BR | 48+93.62 | 60.00 | 599.46 | 599.48 |
| 2BS | 49+03.62 | 60.00 | 599.28 | 599.30 |
| 2BT | 49+13.62 | 60.00 | 599.09 | 599.13 |
| 2BU | 49+23.62 | 60.00 | 598.90 | 598.96 |
| 2BV | 49+33.62 | 60.00 | 598.71 | 598.79 |
| 2BW | 49+43.62 | 60.00 | 598.51 | 598.62 |
| 2BX | 49+53.62 | 60.00 | 598.30 | 598.46 |
| 2BY | 49+63.62 | 60.00 | 598.10 | 598.30 |
| 2BZ | 49+73.62 | 60.00 | 597.89 | 598.13 |
| 2CA | 49+83.62 | 60.00 | 597.67 | 597.96 |
| 2CB | 49+93.62 | 60.00 | 597.45 | 597.79 |
| 2CC | 50+03.62 | 60.00 | 597.23 | 597.61 |
| 2CD | 50+13.62 | 60.00 | 597.00 | 597.42 |
| 2CE | 50+23.62 | 60.00 | 596.77 | 597.22 |
| 2CF | 50+33.62 | 60.00 | 596.53 | 597.00 |
| 2CG | 50+43.62 | 60.00 | 596.30 | 596.78 |
| 2CH | 50+53.62 | 60.00 | 596.05 | 596.55 |
| 2CI | 50+63.62 | 60.00 | 595.81 | 596.31 |
| 2CJ | 50+73.62 | 60.00 | 595.55 | 596.05 |
| 2CK | 50+83.62 | 60.00 | 595.30 | 595.79 |
| 2CL | 50+93.62 | 60.00 | 595.04 | 595.51 |
| 2CM | 51+03.62 | 60.00 | 594.78 | 595.22 |
| 2CN | 51+13.62 | 60.00 | 594.51 | 594.92 |
| 2CO | 51+23.62 | 60.00 | 594.24 | 594.61 |
| 2CP | 51+33.62 | 60.00 | 593.96 | 594.29 |
| 2CQ | 51+43.62 | 60.00 | 593.68 | 593.95 |
| 2CR | 51+53.62 | 60.00 | 593.40 | 593.61 |
| 2CS | 51+63.62 | 60.00 | 593.11 | 593.26 |
| 2CT | 51+73.62 | 60.00 | 592.82 | 592.91 |
| ℄ W BRG PIER 5 EB | 51+83.62 | 60.00 | 592.53 | 592.55 |
| ℄ PIER 5 EB | 51+85.12 | 60.00 | 592.48 | 592.50 |

### NOTES:

1. All Elevations and Offsets are in feet.
2. Offsets are measured with respect to the I-80 EB PGL. Negative offsets are left and positive are right of the PGL.

**FOR INFORMATION ONLY**

MODEL: Default
FILE NAME: pw://transystems-pw.bentley.com:transyscorp-pw1-hosted/Documents/Projects_2018/CH401/401180022/03-WSP/CAD/62W52-SF-3/Sheets/0998309-62W52-S043-DEF212.dgn

WSP USA Inc.
30 N. LASALLE STREET
SUITE 4200
CHICAGO, IL 60602
TEL: (312) 782-8150
FAX: (312) 782-1684

| | | | |
|---|---|---|---|
| USER NAME = USCP702533 | DESIGNED - LAS | REVISED - | |
| | CHECKED - TB | REVISED - | |
| PLOT SCALE = 100.000 ' / in. | DRAWN - GM | REVISED - | |
| PLOT DATE = 10/11/2024 | CHECKED - LAS | REVISED - | |

**STATE OF ILLINOIS**
**DEPARTMENT OF TRANSPORTATION**

**TOP OF SLAB ELEVATIONS - UNIT 2 EB**
**STRUCTURE NUMBER 099-8309 WB AND 099-8325 EB**

SHEET S-43 OF S-87 SHEETS

| F.A.I RTE. | SECTION | COUNTY | TOTAL SHEETS | SHEET NO. |
|---|---|---|---|---|
| I-80 | (99-3DEFP) HF 23 | WILL | 89 | 45 |
| | | CONTRACT NO. 62W52 | | |
| | ILLINOIS | FED. AID PROJECT | | |

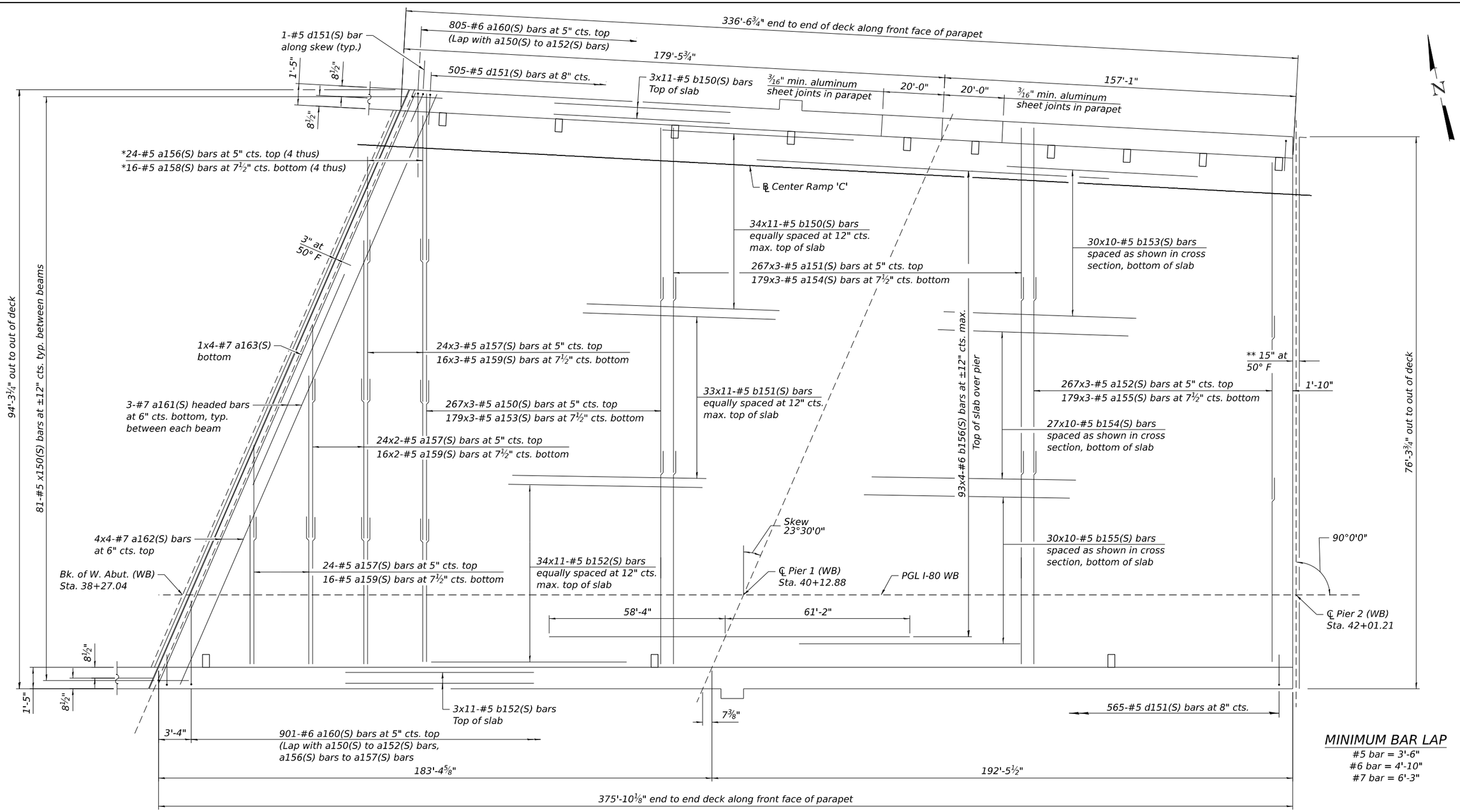


## MINIMUM BAR LAP

#5 bar = 3'-6"
#6 bar = 4'-10"
#7 bar = 6'-3"

## PLAN - UNIT 1 (WESTBOUND)

## WB SCUPPERS LOCATION TABLES

| Inside Scuppers | | |
|---|---|---|
| Station | Offset (ft.) | Type |
| 38+40 | 12.0' Rt. | DS-11 |
| 39+90 | 12.0' Rt. | DS-11 |
| 41+40 | 12.0' Rt. | DS-11 |
| | | |
| | | |

| Outside Scuppers | | |
|---|---|---|
| Station | Offset (ft.) | Type |
| 38+80 | 78.6' Lt. | DS-11 |
| 39+15 | 76.7' Lt. | DS-11 |
| 39+50 | 74.9' Lt. | DS-11 |
| 39+85 | 73.0' Lt. | DS-11 |
| 40+20 | 71.1' Lt. | DS-11 |

| Outside Scuppers (cont.) | | |
|---|---|---|
| Station | Offset (ft.) | Type |
| 40+55 | 69.3' Lt. | DS-11 |
| 40+90 | 67.4' Lt. | DS-11 |
| 41+25 | 65.5' Lt. | DS-11 |
| 41+60 | 63.6' Lt. | DS-11 |
| 41+95 | 61.8' Lt. | DS-11 |

## WB LIGHT POLE LOCATION TABLE

| Station | Offset (ft.) |
|---|---|
| 40+11 | 73.3' Lt. |
| 40+11 | 13.7' Rt. |

* See Field Cutting Diagram on sheet of

** Dimension ahowing concrete opening. For joint opening see sheet of

Notes:
See sheet of for superstructure details and Bill of Material.
Offsets for scupper and light pole locations are measured off of WB PGL.
Bars indicated thus, 32 x 2 - #5 etc. indicates 32 lines of bars with 2 lengths per line.
For Cross Section see sheet

# FOR INFORMATION ONLY

WSP USA Inc.
30 N. LASALLE STREET
SUITE 4200
CHICAGO, IL 60602
TEL: (312) 782-8150
FAX: (312) 782-1684

| | | | |
|---|---|---|---|
| USER NAME = USCP702533 | DESIGNED - BK | REVISED - | |
| | CHECKED - LAS | REVISED - | |
| PLOT SCALE = 0:0 3/16 : / in. | DRAWN - BK | REVISED - | |
| PLOT DATE = 10/11/2024 | CHECKED - LAS | REVISED - | |

**STATE OF ILLINOIS**
**DEPARTMENT OF TRANSPORTATION**

**DECK PLAN - UNIT 1 WB**
**STRUCTURE NUMBER 099-8309 WB AND 099-8325 EB**

SHEET S-44 OF S-87 SHEETS

| F.A.I RTE. | SECTION | COUNTY | TOTAL SHEETS | SHEET NO. |
|---|---|---|---|---|
| I-80 | (99-3DEFP) HF 23 | WILL | 89 | 46 |
| | | CONTRACT NO. 62W52 | | |
| | ILLINOIS | FED. AID PROJECT | | |

MODEL: Default
FILE NAME: pw://transystems-pw.bentley.com:transyscorp-pw1-hosted/Documents/Projects_2018/CH401/401180022/03-WSP/CAD/62W52-SF-3/Sheets/0998309-62W52-S044-DEK101.dgn

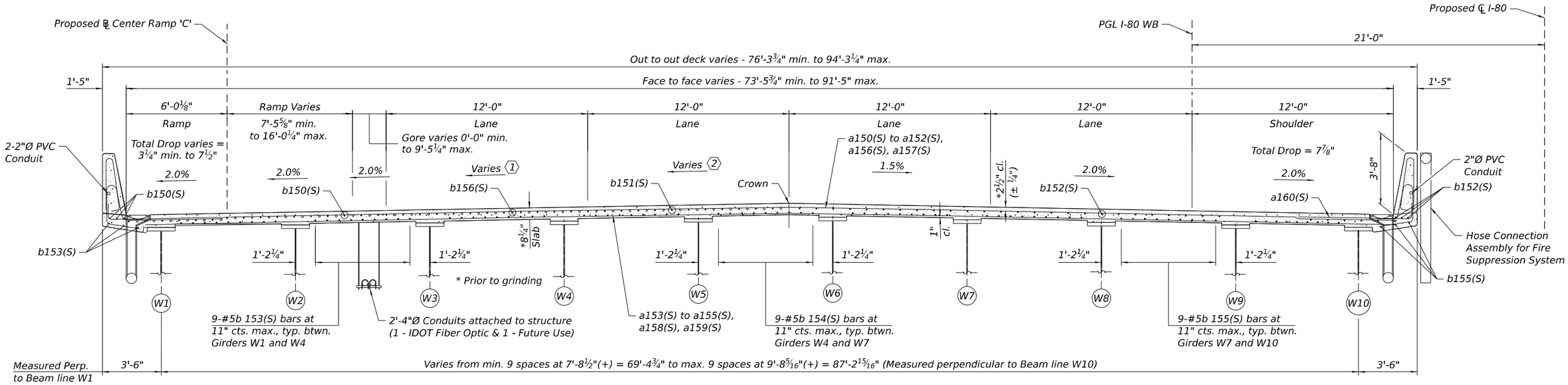


NEAR PIER

NEAR MIDSPAN

## CROSS SECTION - UNIT 1 (WB)

(Looking East)

## CROSS SLOPE TRANSITION DATA

Note: Positive (+) slopes upward from Lt. to Rt.,
Negative (-) slopes downward from Lt. to Rt.

1 Varies from -2.00% at Sta. 37+67 to +2.00% at Sta. 39+54

2 Varies from -2.00% at Sta. 37+67 to +1.50% at Sta. 39+32

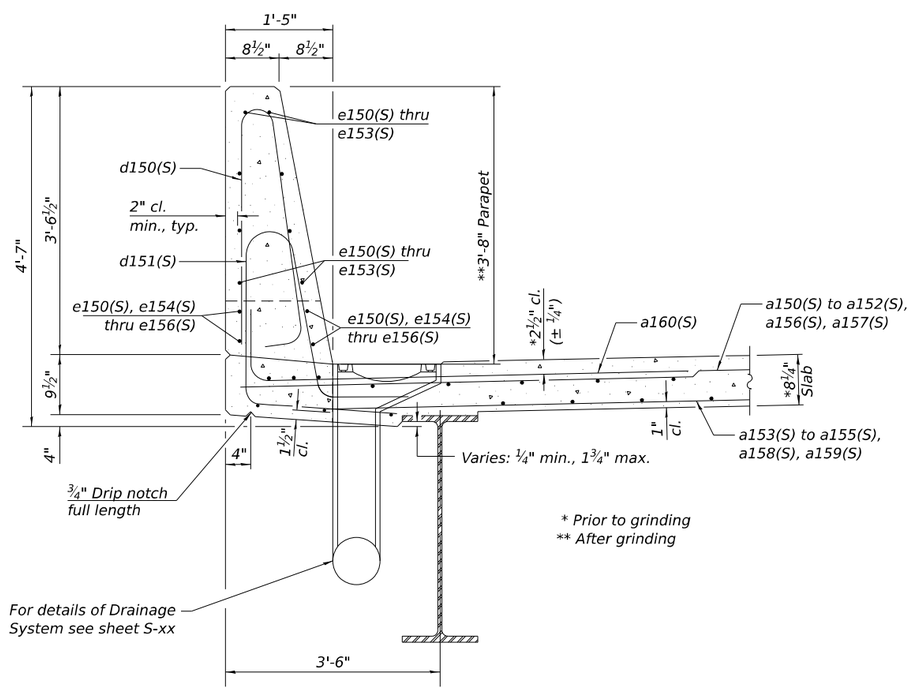


SECTION THRU PARAPET

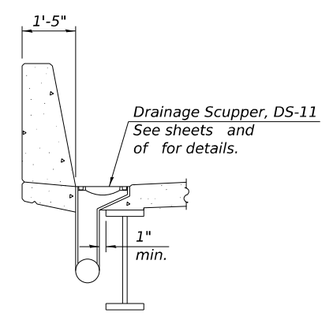


SECTION A-A

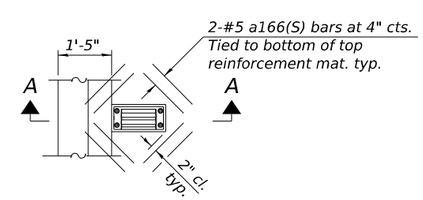


PLAN

Note:
Cut longitudinal reinforcement to clear drainage scuppers.
Drains shall be located clear of all diaphragms.

# FOR INFORMATION ONLY

MODEL: Default
FILE NAME: pw://transystems-pw.bentley.com:transyscorp-pw1-hosted/Documents/Projects_2018/C-H401/401180022/03-WSP/CAD/62W52-SF-3/Sheets/0998309-62W52-S045-DEK102.dgn


WSP USA Inc.
30 N. LASALLE STREET
SUITE 4200
CHICAGO, IL 60602
TEL: (312) 782-8150
FAX: (312) 782-1684


| | | | |
|---|---|---|---|
| USER NAME = USCP702533 | DESIGNED - BK | REVISED - | |
| | CHECKED - LAS | REVISED - | |
| PLOT SCALE = 0:0 3/16 : / in. | DRAWN - BK | REVISED - | |
| PLOT DATE = 10/11/2024 | CHECKED - LAS | REVISED - | |

**STATE OF ILLINOIS**
**DEPARTMENT OF TRANSPORTATION**

**DECK CROSS SECTION AND PARAPET - UNIT 1 WB**
**STRUCTURE NUMBER 099-8309 WB AND 099-8325 EB**

SHEET S-45 OF S-87 SHEETS

| F.A.I RTE. | SECTION | COUNTY | TOTAL SHEETS | SHEET NO. |
|---|---|---|---|---|
| I-80 | (99-3DEFP) HF 23 | WILL | 89 | 47 |
| | | CONTRACT NO. 62W52 | | |
| | ILLINOIS | FED. AID PROJECT | | |

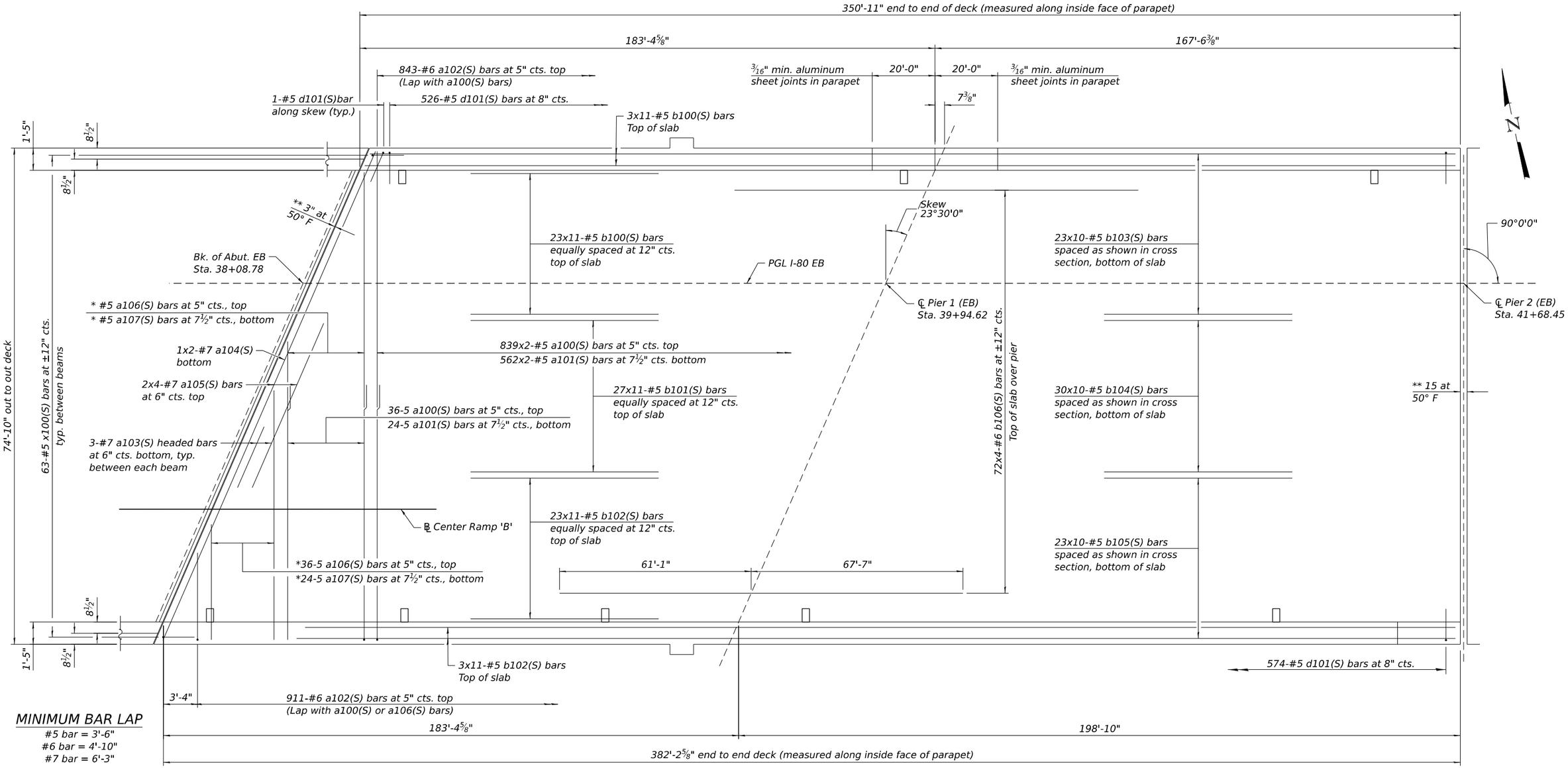


## MINIMUM BAR LAP

#5 bar = 3'-6"
#6 bar = 4'-10"
#7 bar = 6'-3"

## PLAN - UNIT 1 (EASTBOUND)

## EB SCUPPERS LOCATION TABLES

| Inside Scuppers | | |
|---|---|---|
| Station | Offset (ft.) | Type |
| 38+30 | 12.0' Lt. | DS-11 |
| 39+90 | 12.0' Lt. | DS-11 |
| 41+40 | 12.0' Lt. | DS-11 |
| | | |
| | | |

| Outside Scuppers | | |
|---|---|---|
| Station | Offset (ft.) | Type |
| 38+00 | 60.0' Rt. | DS-11 |
| 38+62 | 60.0' Rt. | DS-11 |
| 39+26 | 60.0' Rt. | DS-11 |
| 39+90 | 60.0' Rt. | DS-11 |
| 41+40 | 60.0' Rt. | DS-11 |

## EB LIGHT POLE LOCATION TABLE

| Station | Offset (ft.) |
|---|---|
| 39+55 | 13.7' Lt. |
| 39+55 | 61.7' Rt. |

Notes:
See sheet of for superstructure details and Bill of Material.
Offsets for scupper and light pole locations are measured off of EB PGL.
Bars indicated thus, 32 x 2 - #5 etc. indicates 32 lines of bars with 2 lengths per line.
For Cross Section see sheet

* See Field Cutting Diagram on sheet of

** Dimension ahowing concrete opening. For joint opening see sheet of

# FOR INFORMATION ONLY


WSP USA Inc.
30 N. LASALLE STREET
SUITE 4200
CHICAGO, IL 60602
TEL: (312) 782-8150
FAX: (312) 782-1684


| | | | |
|---|---|---|---|
| USER NAME = USCP702533 | DESIGNED - BK | REVISED - | |
| | CHECKED - LAS | REVISED - | |
| PLOT SCALE = 0:0 3/16 : / in. | DRAWN - BK | REVISED - | |
| PLOT DATE = 10/11/2024 | CHECKED - LAS | REVISED - | |

**STATE OF ILLINOIS**
**DEPARTMENT OF TRANSPORTATION**

**DECK PLAN - UNIT 1 EB**
**STRUCTURE NUMBER 099-8309 WB AND 099-8325 EB**

SHEET S-46 OF S-87 SHEETS

| F.A.I RTE. | SECTION | COUNTY | TOTAL SHEETS | SHEET NO. |
|---|---|---|---|---|
| I-80 | (99-3DEFP) HF 23 | WILL | 89 | 48 |
| | | CONTRACT NO. 62W52 | | |
| | ILLINOIS | FED. AID PROJECT | | |


MODEL: Default
FILE NAME: pw://transystems-pw.bentley.com:transyscorp-pw1-hosted/Documents/Projects_2018/CH401/401180022/03-WSP/CAD/62W52-SP-3/Sheets/0998309-62W52-S046-DBK105.dgn

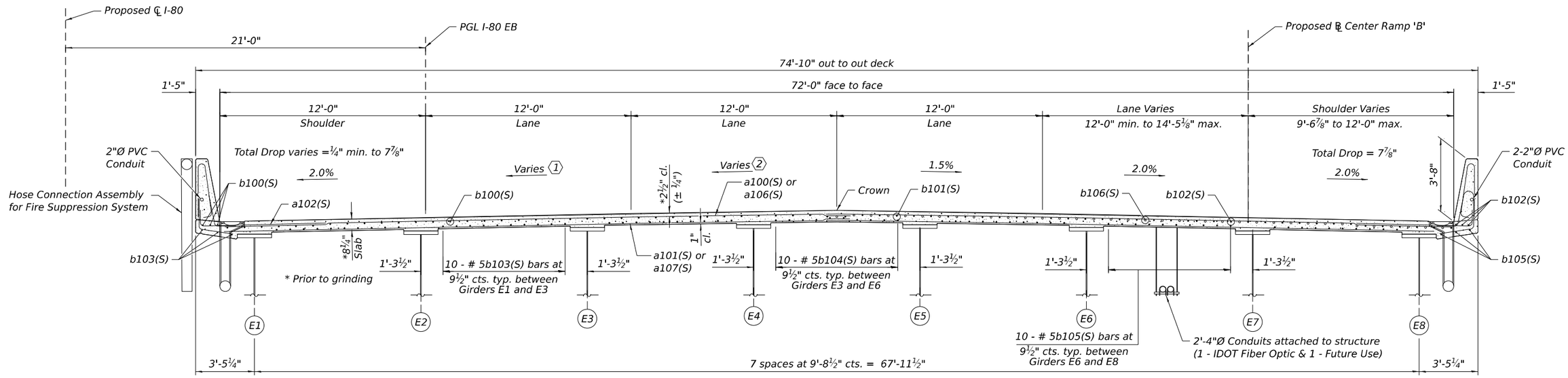


NEAR MIDSPAN

NEAR PIER

## CROSS SECTION - UNIT 1 (EB)

(Looking East)

## CROSS SLOPE TRANSITION DATA

Note: Positive (+) slopes upward from Lt. to Rt.,
Negative (-) slopes downward from Lt. to Rt.

1 Varies from -2.00% at Sta. 37+63 to +2.00% at Sta. 39+51

2 Varies from -2.00% at Sta. 37+63 to +1.50% at Sta. 39+28

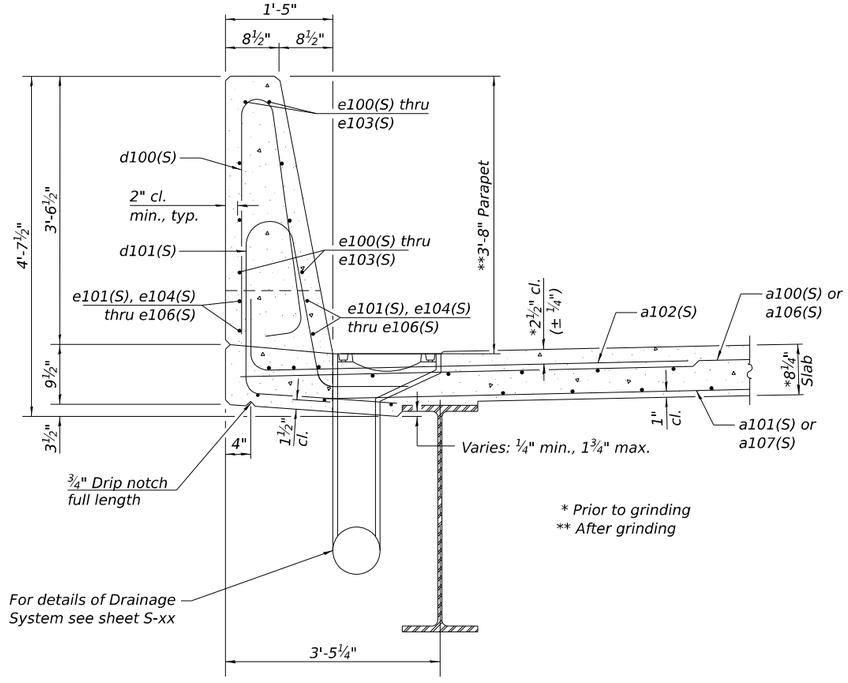


SECTION THRU PARAPET

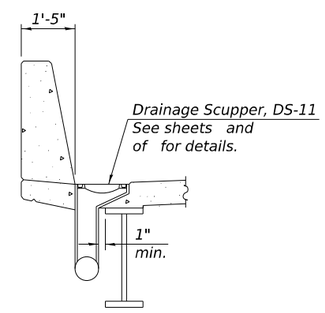


SECTION A-A

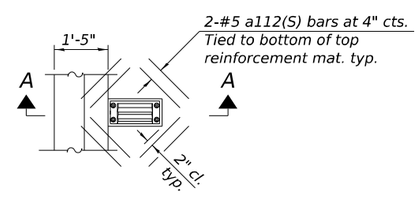


PLAN

Note:
Cut longitudinal reinforcement to clear drainage scuppers.
Drains shall be located clear of all diaphragms.

# FOR INFORMATION ONLY

MODEL: Default
FILE NAME: pw://transystems-pw.bentley.com:transyscorp-pw1-hosted/Documents/Projects_2018/CH401/401180022/03-WSP/CAD/62W52-SF-3/Sheets/0998309-62W52-S047-DEK106.dgn

WSP USA Inc.
30 N. LASALLE STREET
SUITE 4200
CHICAGO, IL 60602
TEL: (312) 782-8150
FAX: (312) 782-1684

| | | | |
|---|---|---|---|
| USER NAME = USCP702533 | DESIGNED - BK | REVISED - | |
| | CHECKED - LAS | REVISED - | |
| PLOT SCALE = 0:0 3/16 : / in. | DRAWN - BK | REVISED - | |
| PLOT DATE = 10/11/2024 | CHECKED - LAS | REVISED - | |

STATE OF ILLINOIS
DEPARTMENT OF TRANSPORTATION

DECK CROSS SECTION AND PARAPET - UNIT 1 EB
STRUCTURE NUMBER 099-8309 WB AND 099-8325 EB

SHEET S-47 OF S-87 SHEETS

| F.A.I RTE. | SECTION | COUNTY | TOTAL SHEETS | SHEET NO. |
|---|---|---|---|---|
| I-80 | (99-3DEFP) HF 23 | WILL | 89 | 49 |
| | | CONTRACT NO. 62W52 | | |
| | ILLINOIS | FED. AID PROJECT | | |

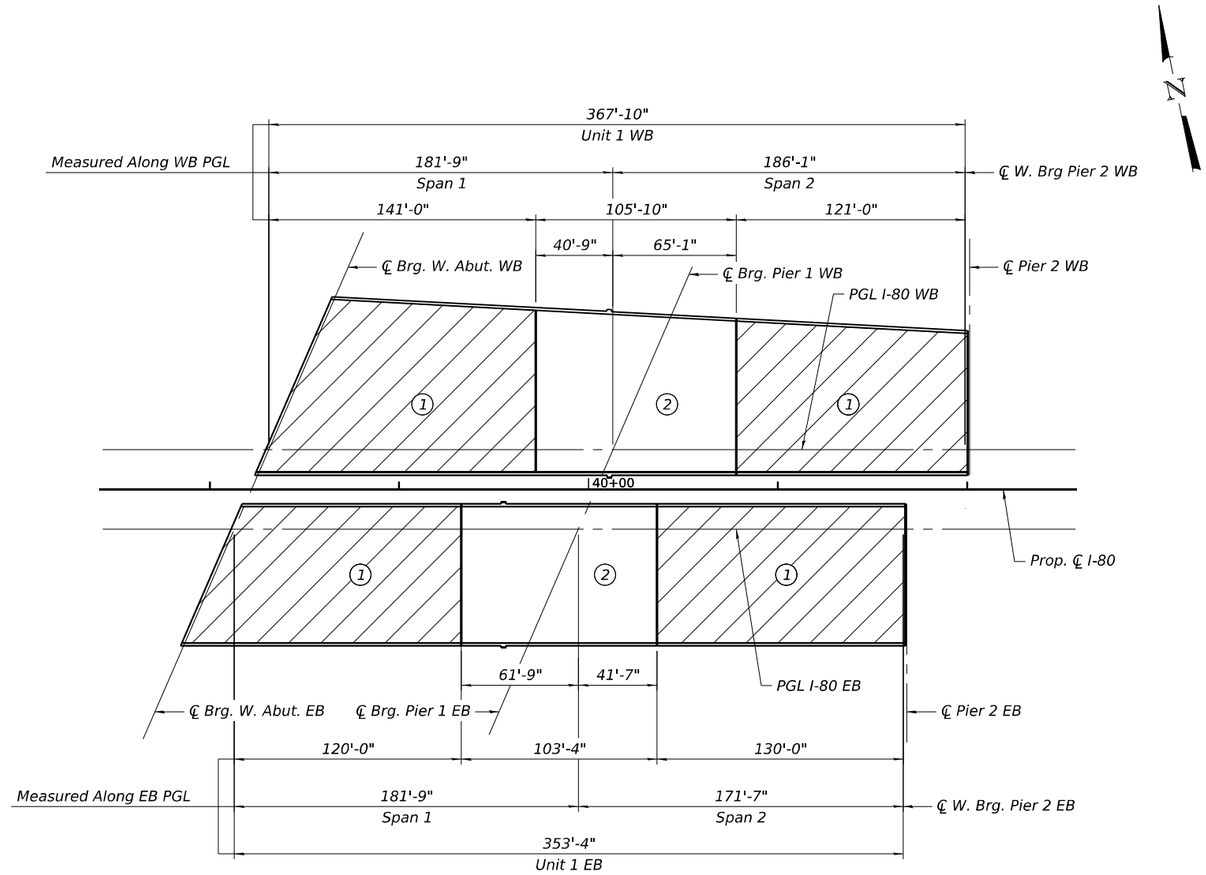


## DECK POURING SEQUENCE - UNIT 1

## NOTES ON DECK POURING SEQUENCE:

1. When the deck pour is stopped for the day at one or more of the transverse bonded construction joints in the deck pouring sequence as shown, the next pour shall not be made until both of the following are met:
   a. At least 72 hours shall have elapsed from the end of the previous pour.
   b. The concrete strength shall have attained a minimum flexural strength of 675 psi or a minimum compressive strength of 4000 psi.

# FOR INFORMATION ONLY

MODEL: Default
FILE NAME: pw://transystems-pw.bentley.com:transyscorp-pw1-hosted/Documents/Projects_2018/CH401/401180022/03-WSP/CAD/62W52-SF-3/Sheets/0998309-62W52-S048-SE001.dgn

WSP USA Inc.
30 N. LASALLE STREET
SUITE 4200
CHICAGO, IL 60602
TEL: (312) 782-8150
FAX: (312) 782-1684

| | | | |
|---|---|---|---|
| USER NAME = USCP702533 | DESIGNED - FM | REVISED - | |
| | CHECKED - PSK | REVISED - | |
| PLOT SCALE = 0:0 3/16 : / in. | DRAWN - FM | REVISED - | |
| PLOT DATE = 10/11/2024 | CHECKED - PSK | REVISED - | |

**STATE OF ILLINOIS**
**DEPARTMENT OF TRANSPORTATION**

**DECK POURING SEQUENCE - UNIT 1 WB & EB**
**STRUCTURE NUMBER 099-8309 WB AND 099-8325 EB**

SHEET S-48 OF S-87 SHEETS

| F.A.I RTE. | SECTION | COUNTY | TOTAL SHEETS | SHEET NO. |
|---|---|---|---|---|
| I-80 | (99-3DEFP) HF 23 | WILL | 89 | 50 |
| | | CONTRACT NO. 62W52 | | |
| | ILLINOIS | FED. AID PROJECT | | |

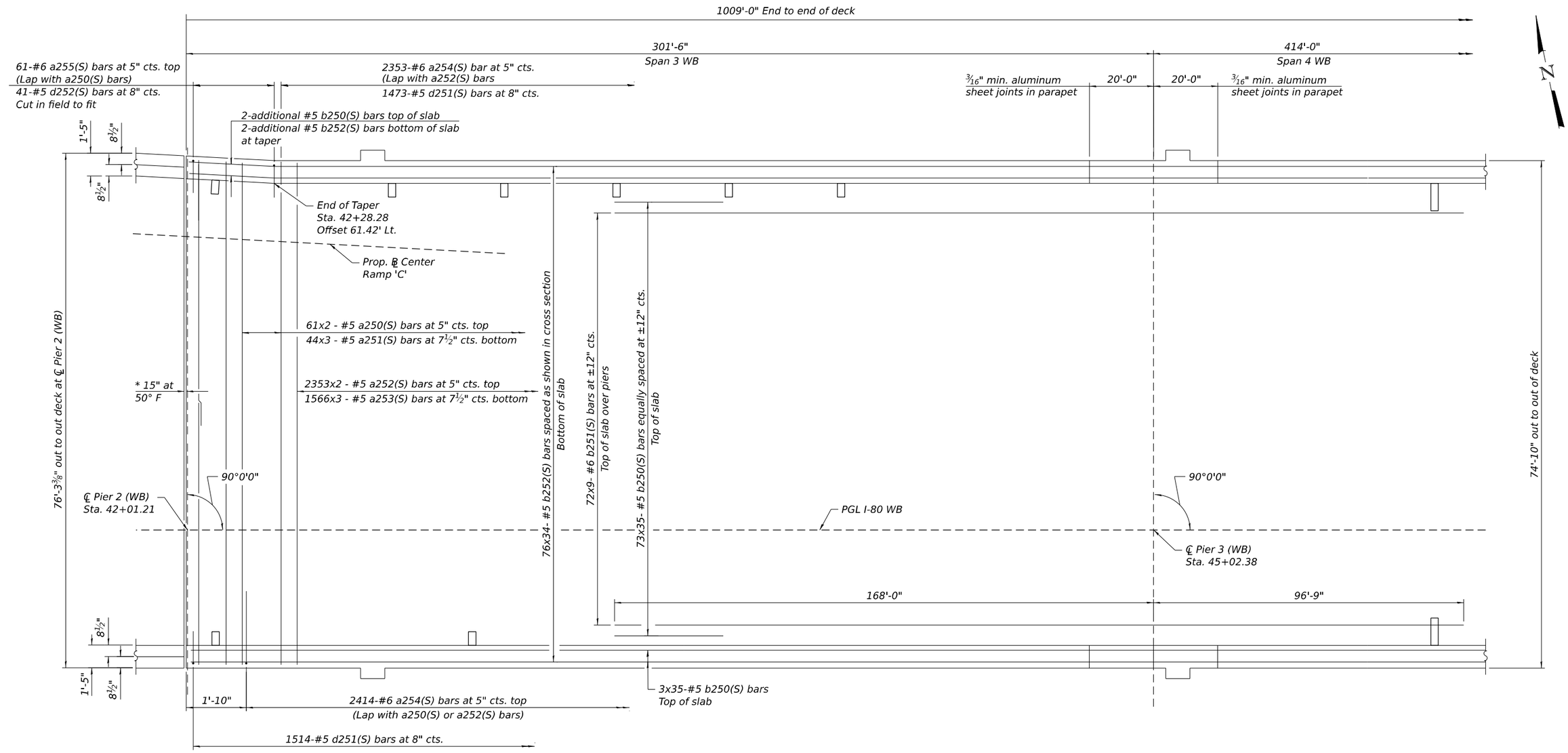


## PARTIAL PLAN - UNIT 2 (WESTBOUND)

### WB SCUPPERS LOCATION TABLES

| Inside Scuppers | | |
|---|---|---|
| Station | Offset (ft.) | Type |
| 42+10 | 12.0' Rt. | DS-11 |
| 42+90 | 12.0' Rt. | DS-11 |
| 45+90 | 12.0' Rt. | Special |
| 47+40 | 12.0' Rt. | Special |
| 48+90 | 12.0' Rt. | Special |
| 50+40 | 12.0' Rt. | Special |
| 51+90 | 12.0' Rt. | Special |

| Outside Scuppers | | |
|---|---|---|
| Station | Offset (ft.) | Type |
| 42+10 | 60.0' Rt. | DS-11 |
| 42+30 | 60.0' Rt. | DS-11 |
| 42+65 | 60.0' Rt. | DS-11 |
| 43+00 | 60.0' Rt. | DS-11 |
| 43+35 | 60.0' Rt. | DS-11 |
| 43+70 | 60.0' Rt. | DS-11 |
| 44+05 | 60.0' Rt. | DS-11 |
| 45+90 | 60.0' Rt. | Special |
| 47+40 | 60.0' Rt. | Special |
| 48+90 | 60.0' Rt. | Special |
| 50+40 | 60.0' Rt. | Special |
| 51+90 | 60.0' Rt. | Special |

### WB LIGHT POLE LOCATION TABLE

| Station | Offset (ft.) |
|---|---|
| 42+59 | 61.7' Lt. |
| 42+59 | 13.7' Rt. |
| 45+10 | 61.7' Lt. |
| 45+10 | 13.7' Rt. |
| 47+58 | 61.7' Lt. |
| 47+58 | 13.7' Rt. |
| 50+10 | 61.7' Lt. |
| 50+10 | 13.7' Rt. |

* Dimension showing concrete opening.
For joint opening see sheet S- of .

For bars near joint see sheet S- .

### MINIMUM BAR LAP

#5 bar = 3'-6"
#6 bar = 4'-10"

Notes:
See sheet of for superstructure details and Bill of Material.
Offsets for scupper and light pole locations are measured off of WB PGL.
Bars indicated thus, 32 x 2 - #5 etc. indicates 32 lines of bars with 2 lengths per line.
For Cross Section see sheet

# FOR INFORMATION ONLY

MODEL: Default
FILE NAME: pw://transystems-pw.bentley.com:transyscorp-pw1-hosted/Documents/Projects_2018/CH401/401180022/03-WSP/CAD/62W52-SF-3/Sheets/0998309-62W52-S049-DEK201.dgn

WSP USA Inc.
30 N. LASALLE STREET
SUITE 4200
CHICAGO, IL 60602
TEL: (312) 782-8150
FAX: (312) 782-1684

| | | | |
|---|---|---|---|
| USER NAME = USCP702533 | DESIGNED - BK | REVISED - | |
| | CHECKED - LAS | REVISED - | |
| PLOT SCALE = 0:0 3/16 : / in. | DRAWN - BK | REVISED - | |
| PLOT DATE = 10/11/2024 | CHECKED - LAS | REVISED - | |

**STATE OF ILLINOIS**
**DEPARTMENT OF TRANSPORTATION**

**DECK PLAN 1 - UNIT 2 WB**
**STRUCTURE NUMBER 099-8309 WB AND 099-8325 EB**

SHEET S-49 OF S-87 SHEETS

| F.A.I RTE. | SECTION | COUNTY | TOTAL SHEETS | SHEET NO. |
|---|---|---|---|---|
| I-80 | (99-3DEFP) HF 23 | WILL | 89 | 51 |
| | | CONTRACT NO. 62W52 | | |
| | ILLINOIS | FED. AID PROJECT | | |

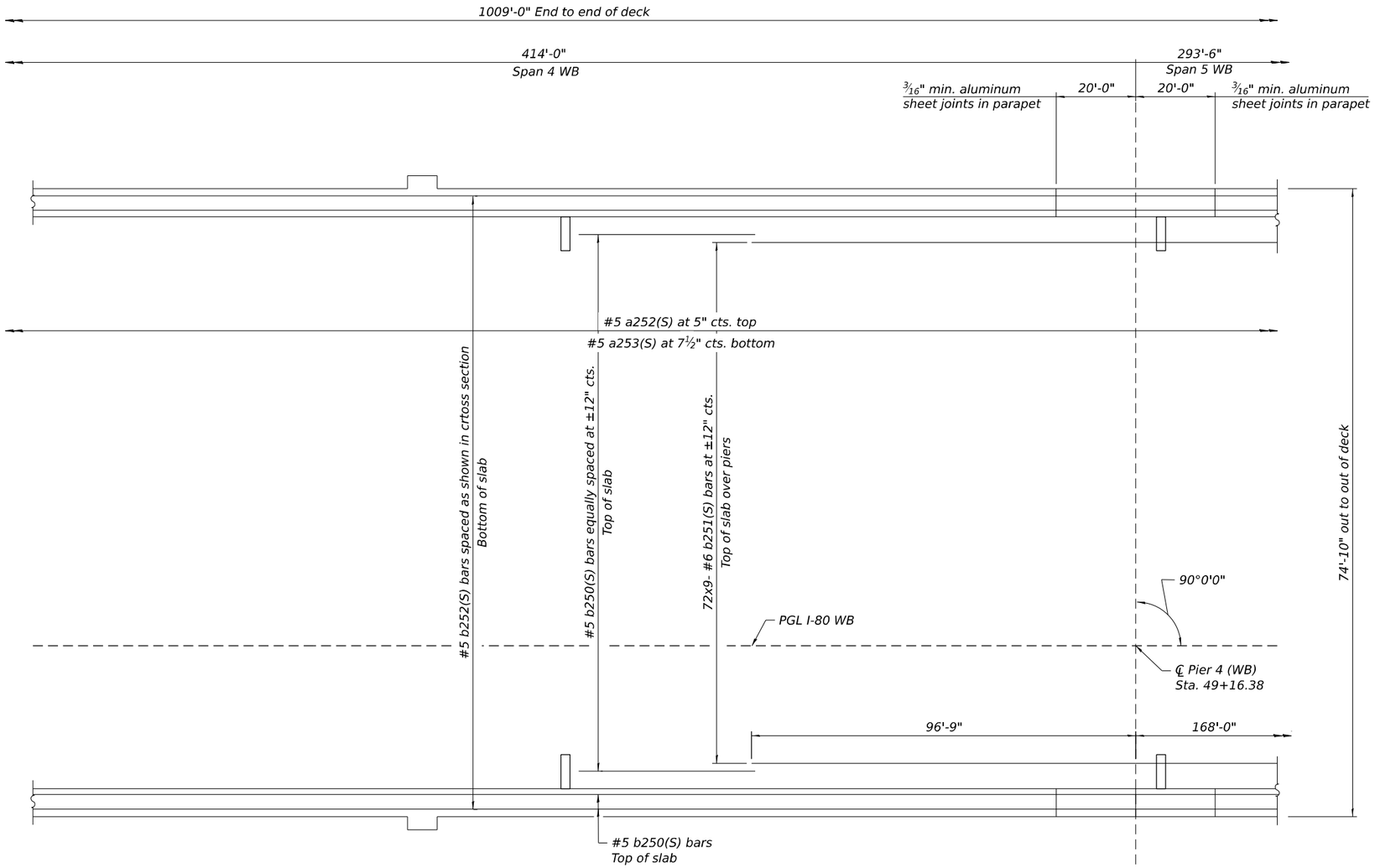


PARTIAL PLAN - UNIT 2 (WESTBOUND)

MINIMUM BAR LAP

#5 bar = 3'-6"
#6 bar = 4'-10"

Notes:
See sheet of for superstructure details and Bill of Material.
Bars indicated thus, 32 x 2 - #5 etc. indicates 32 lines of bars with 2 lengths per line.
For Cross Section see sheet

# FOR INFORMATION ONLY

MODEL: Default
FILE NAME: pw://transystems-pw.bentley.com:transyscorp-pw1-hosted/Documents/Projects_2018/C-H401/401180022/03-WSP/CAD/62W52-SF-3/Sheets/0998309-62W52-S050-DPK202.dgn

WSP USA Inc.
30 N. LASALLE STREET
SUITE 4200
CHICAGO, IL 60602
TEL: (312) 782-8150
FAX: (312) 782-1684

| | | | |
|---|---|---|---|
| USER NAME = USCP702533 | DESIGNED - BK | REVISED - | |
| | CHECKED - LAS | REVISED - | |
| PLOT SCALE = 0:0 3/16 : / in. | DRAWN - BK | REVISED - | |
| PLOT DATE = 10/11/2024 | CHECKED - LAS | REVISED - | |

STATE OF ILLINOIS
DEPARTMENT OF TRANSPORTATION

DECK PLAN 2 - UNIT 2 WB
STRUCTURE NUMBER 099-8309 WB AND 099-8325 EB

SHEET S-50 OF S-87 SHEETS

| F.A.I RTE. | SECTION | COUNTY | TOTAL SHEETS | SHEET NO. |
|---|---|---|---|---|
| I-80 | (99-3DEFP) HF 23 | WILL | 89 | 52 |
| | | CONTRACT NO. 62W52 | | |
| | ILLINOIS | FED. AID PROJECT | | |

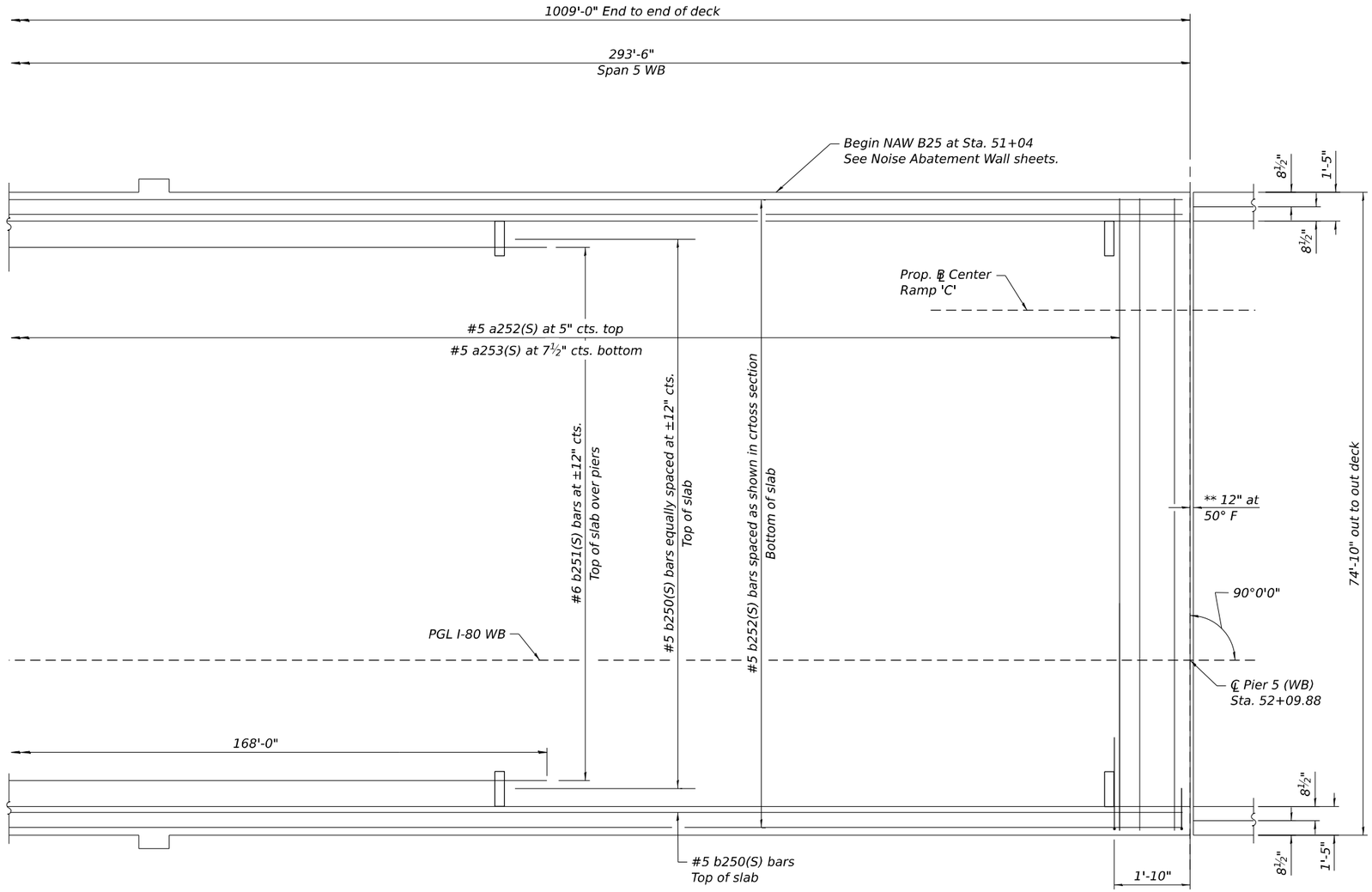


PARTIAL PLAN - UNIT 2 (WESTBOUND)

For bars near joint see sheet S-

MINIMUM BAR LAP

#5 bar = 3'-6"
#6 bar = 4'-10"

Notes:
See sheet of for superstructure details and Bill of Material.
Bars indicated thus, 32 x 2 - #5 etc. indicates 32 lines of bars with 2 lengths per line.
For Cross Section see sheet

# FOR INFORMATION ONLY

MODEL: Default
FILE NAME: pw://transystems-pw.bentley.com:transyscorp-pw1-hosted/Documents/Projects_2018/C-4401/4011800220/03-WSP/CAD/62W52-SF-3/Sheets/0998309-62W52-S051-DEK203.dgn

WSP USA Inc.
30 N. LASALLE STREET
SUITE 4200
CHICAGO, IL 60602
TEL: (312) 782-8150
FAX: (312) 782-1684

| | | | |
|---|---|---|---|
| USER NAME = USCP702533 | DESIGNED - BK | REVISED - | |
| | CHECKED - LAS | REVISED - | |
| PLOT SCALE = 0:0 3/16 : / in. | DRAWN - BK | REVISED - | |
| PLOT DATE = 10/11/2024 | CHECKED - LAS | REVISED - | |

STATE OF ILLINOIS
DEPARTMENT OF TRANSPORTATION

DECK PLAN 3 - UNIT 2 WB
STRUCTURE NUMBER 099-8309 WB AND 099-8325 EB

SHEET S-51 OF S-87 SHEETS

| F.A.I RTE. | SECTION | COUNTY | TOTAL SHEETS | SHEET NO. |
|---|---|---|---|---|
| I-80 | (99-3DEFP) HF 23 | WILL | 89 | 53 |
| | | CONTRACT NO. 62W52 | | |
| | ILLINOIS | FED. AID PROJECT | | |

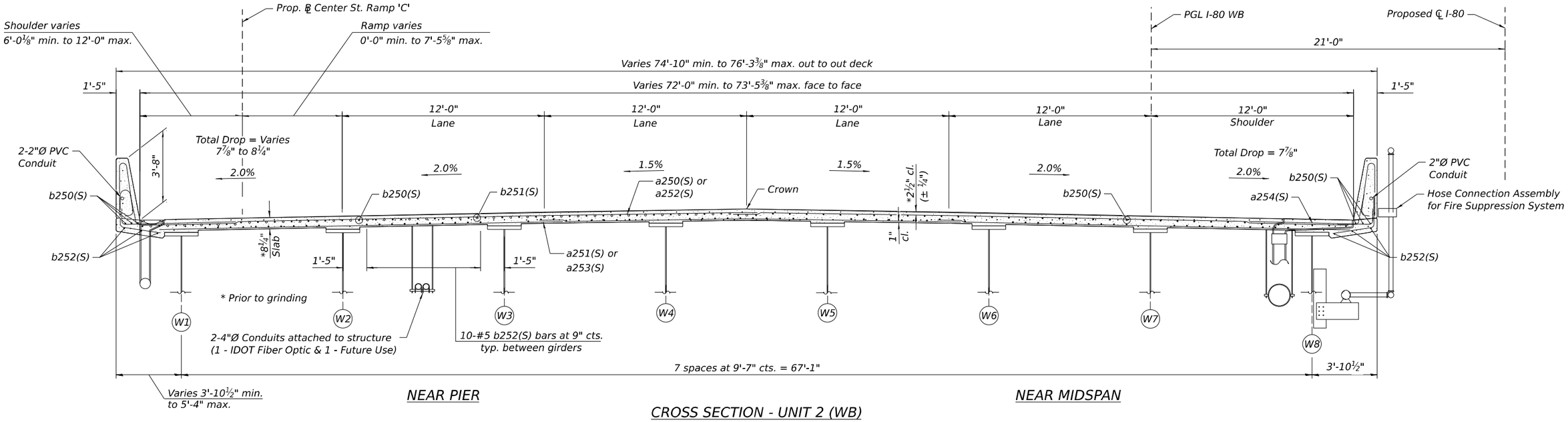


## CROSS SECTION - UNIT 2 (WB)

(Looking East)

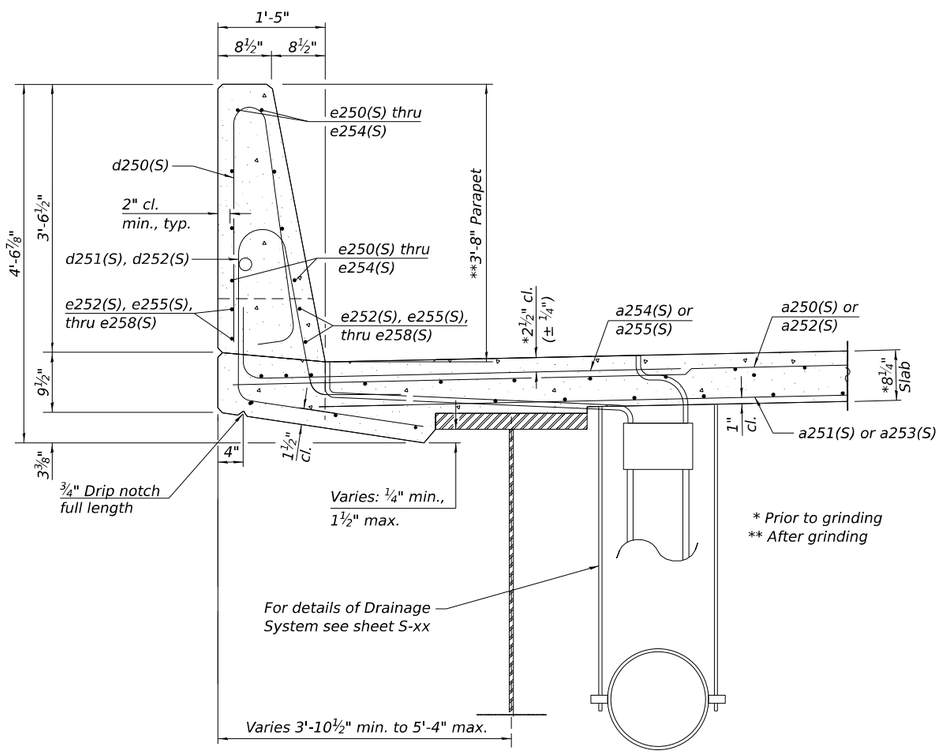


## SECTION THRU PARAPET

Drainage Scuppers (Special) shown,
Drainage Scupper , DS-11 similar

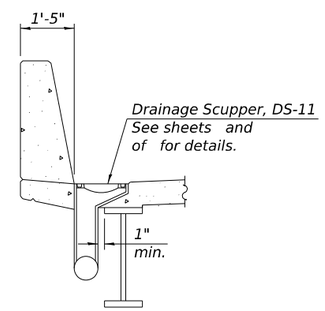


## SECTION A-A

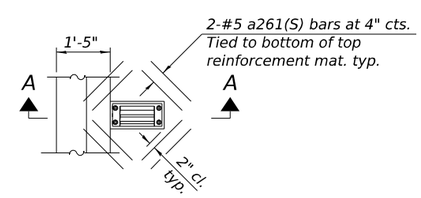


## PLAN

Drainage Scupper, DS-11 shown,
Drainage Scuppers (Special) similar

Note:
Cut longitudinal reinforcement to clear drainage scuppers.
Drains shall be located clear of all diaphragms.

# FOR INFORMATION ONLY

MODEL: Default
FILE NAME: pw://transystems-pw.bentley.com:transyscorp-pw1-Hosted/Documents/Projects_2018/CH401/401180022/03-WSP/CAD/62W52-SR-3/Sheets/0998309-62W52-S052-DEK204.dgn


WSP USA Inc.
30 N. LASALLE STREET
SUITE 4200
CHICAGO, IL 60602
TEL: (312) 782-8150
FAX: (312) 782-1684


| | | | |
|---|---|---|---|
| USER NAME = USCP702533 | DESIGNED - BK | REVISED - | |
| | CHECKED - LAS | REVISED - | |
| PLOT SCALE = 0:0 3/16 : / in. | DRAWN - BK | REVISED - | |
| PLOT DATE = 10/11/2024 | CHECKED - LAS | REVISED - | |

**STATE OF ILLINOIS**
**DEPARTMENT OF TRANSPORTATION**

**DECK CROSS SECTION AND PARAPET - UNIT 2 WB**
**STRUCTURE NUMBER 099-8309 WB AND 099-8325 EB**

SHEET S-52 OF S-87 SHEETS

| F.A.I RTE. | SECTION | COUNTY | TOTAL SHEETS | SHEET NO. |
|---|---|---|---|---|
| I-80 | (99-3DEFP) HF 23 | WILL | 89 | 54 |
| | | CONTRACT NO. 62W52 | | |
| | ILLINOIS | FED. AID PROJECT | | |

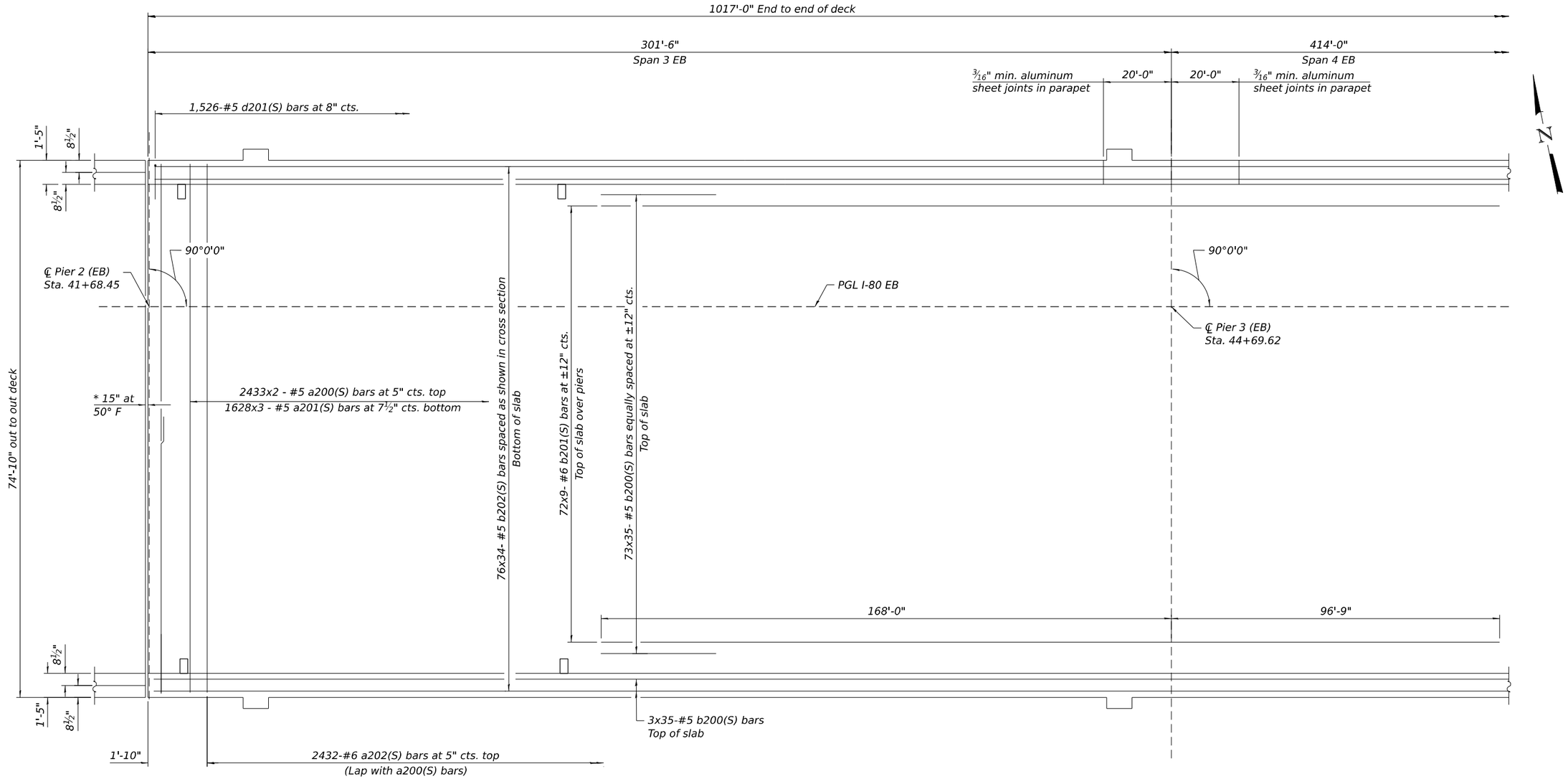


* Dimension showing concrete opening.
For joint opening see sheet S- of .

For bars near joint see sheet S- .

## PLAN - UNIT 2 (EASTBOUND)

### MINIMUM BAR LAP

#5 bar = 3'-6"
#6 bar = 4'-10"

### EB SCUPPERS LOCATION TABLES

| Inside Scuppers | | |
|---|---|---|
| Station | Offset (ft.) | Type |
| 41+78 | 12.0' Lt. | DS-11 |
| 42+90 | 12.0' Lt. | DS-11 |
| 45+90 | 12.0' Lt. | Special |
| 47+40 | 12.0' Lt. | Special |
| 49+30 | 12.0' Lt. | Special |
| 50+40 | 12.0' Lt. | Special |
| 51+75 | 12.0' Lt. | Special |

| Outside Scuppers | | |
|---|---|---|
| Station | Offset (ft.) | Type |
| 41+78 | 60.0' Rt. | DS-11 |
| 42+90 | 60.0' Rt. | DS-11 |
| 45+90 | 60.0' Rt. | Special |
| 47+40 | 60.0' Rt. | Special |
| 49+30 | 60.0' Rt. | Special |
| 50+40 | 60.0' Rt. | Special |
| 51+75 | 60.0' Rt. | Special |

### EB LIGHT POLE LOCATION TABLE

| Station | Offset (ft.) |
|---|---|
| 42+00 | 13.7' Lt. |
| 42+00 | 61.7' Rt. |
| 44+53 | 13.7' Lt. |
| 44+53 | 61.7' Rt. |
| 47+04 | 13.7' Lt. |
| 47+04 | 61.7' Rt. |
| 49+55 | 13.7' Lt. |
| 49+55 | 61.7' Rt. |

Notes:
See sheet of for superstructure details and Bill of Material.
Offsets for scupper and light pole locations are measured off of EB PGL.
Bars indicated thus, 32 x 2 - #5 etc. indicates 32 lines of bars with 2 lengths per line.
For Cross Section see sheet

# FOR INFORMATION ONLY

WSP USA Inc.
30 N. LASALLE STREET
SUITE 4200
CHICAGO, IL 60602
TEL: (312) 782-8150
FAX: (312) 782-1684

| | | | |
|---|---|---|---|
| USER NAME = USCP702533 | DESIGNED - BK | REVISED - | |
| | CHECKED - LAS | REVISED - | |
| PLOT SCALE = 0:0 3/16 : / in. | DRAWN - BK | REVISED - | |
| PLOT DATE = 10/11/2024 | CHECKED - LAS | REVISED - | |

**STATE OF ILLINOIS**
**DEPARTMENT OF TRANSPORTATION**

**DECK PLAN 1 - UNIT 2 EB**
**STRUCTURE NUMBER 099-8309 WB AND 099-8325 EB**

SHEET S-53 OF S-87 SHEETS

| F.A.I RTE. | SECTION | COUNTY | TOTAL SHEETS | SHEET NO. |
|---|---|---|---|---|
| I-80 | (99-3DEFP) HF 23 | WILL | 89 | 55 |
| | | CONTRACT NO. 62W52 | | |
| | ILLINOIS | FED. AID PROJECT | | |

MODEL: Default
FILE NAME: pw://transystems-pw.bentley.com:transyscorp-pw1-hosted/Documents/Projects_2018/CH401/401180022/03-WSP/CAD/62W52-SF-3/Sheets/0998309-62W52-S053-DBK208.dgn

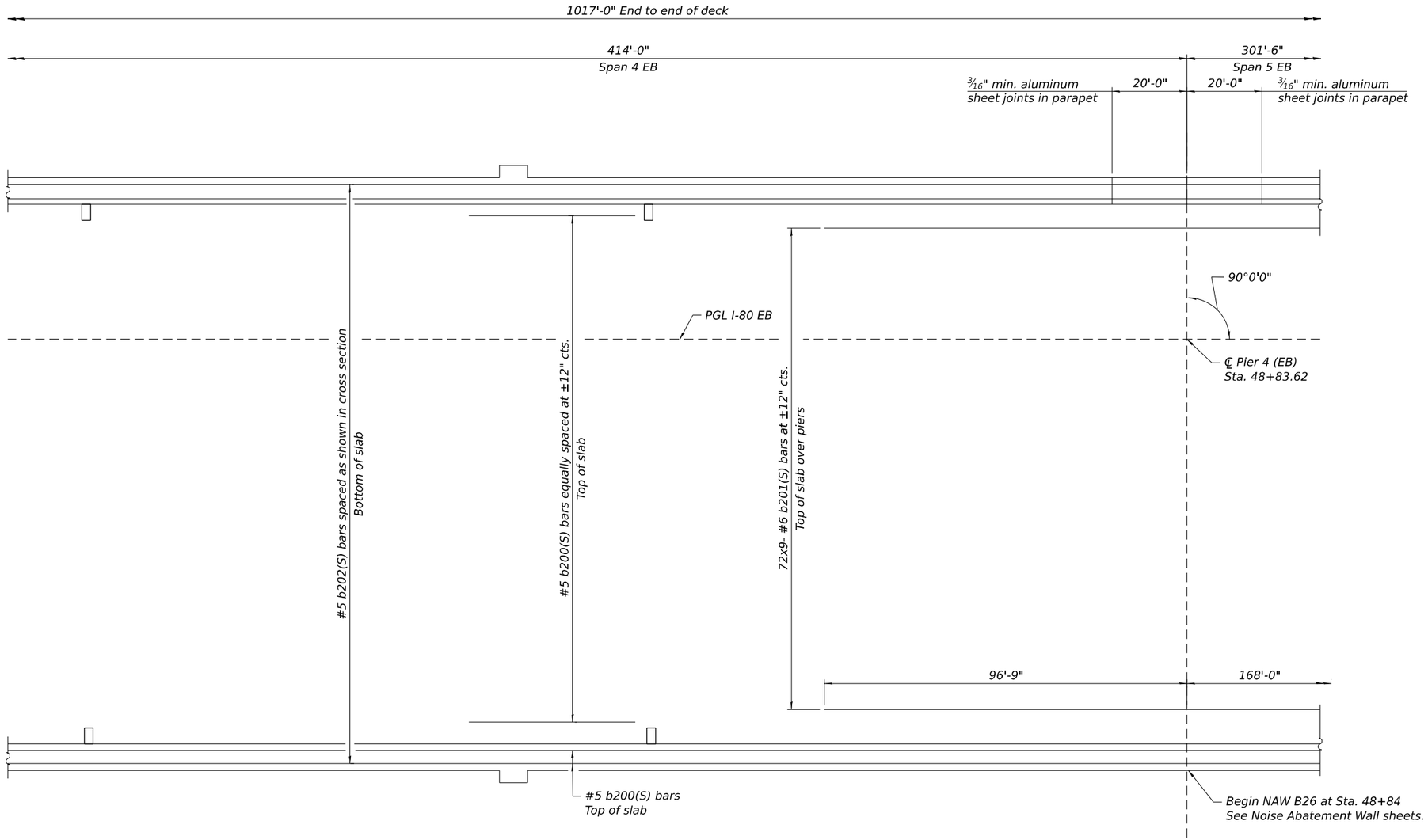


PLAN - UNIT 2 (EASTBOUND)

MINIMUM BAR LAP

#5 bar = 3'-6"
#6 bar = 4'-10"

Notes:
See sheet of for superstructure details and Bill of Material.
Bars indicated thus, 32 x 2 - #5 etc. indicates 32 lines of bars with 2 lengths per line.
For Cross Section see sheet

# FOR INFORMATION ONLY

MODEL: Default
FILE NAME: pw://transystems-pw.bentley.com:transyscorp-pw1-hosted/Documents/Projects_2018/CH401/401180022/03-WSP/CAD/62W52-SF-3/Sheets/0998309-62W52-S054-DEK209.dgn

WSP USA Inc.
30 N. LASALLE STREET
SUITE 4200
CHICAGO, IL 60602
TEL: (312) 782-8150
FAX: (312) 782-1684

| | | | |
|---|---|---|---|
| USER NAME = USCP702533 | DESIGNED - BK | REVISED - | |
| | CHECKED - LAS | REVISED - | |
| PLOT SCALE = 0:0 3/16 : / in. | DRAWN - BK | REVISED - | |
| PLOT DATE = 10/11/2024 | CHECKED - LAS | REVISED - | |

STATE OF ILLINOIS
DEPARTMENT OF TRANSPORTATION

DECK PLAN 2 - UNIT 2 EB
STRUCTURE NUMBER 099-8309 WB AND 099-8325 EB

SHEET S-54 OF S-87 SHEETS

| F.A.I RTE. | SECTION | COUNTY | TOTAL SHEETS | SHEET NO. |
|---|---|---|---|---|
| I-80 | (99-3DEFP) HF 23 | WILL | 89 | 56 |
| | | CONTRACT NO. 62W52 | | |
| | ILLINOIS | FED. AID PROJECT | | |

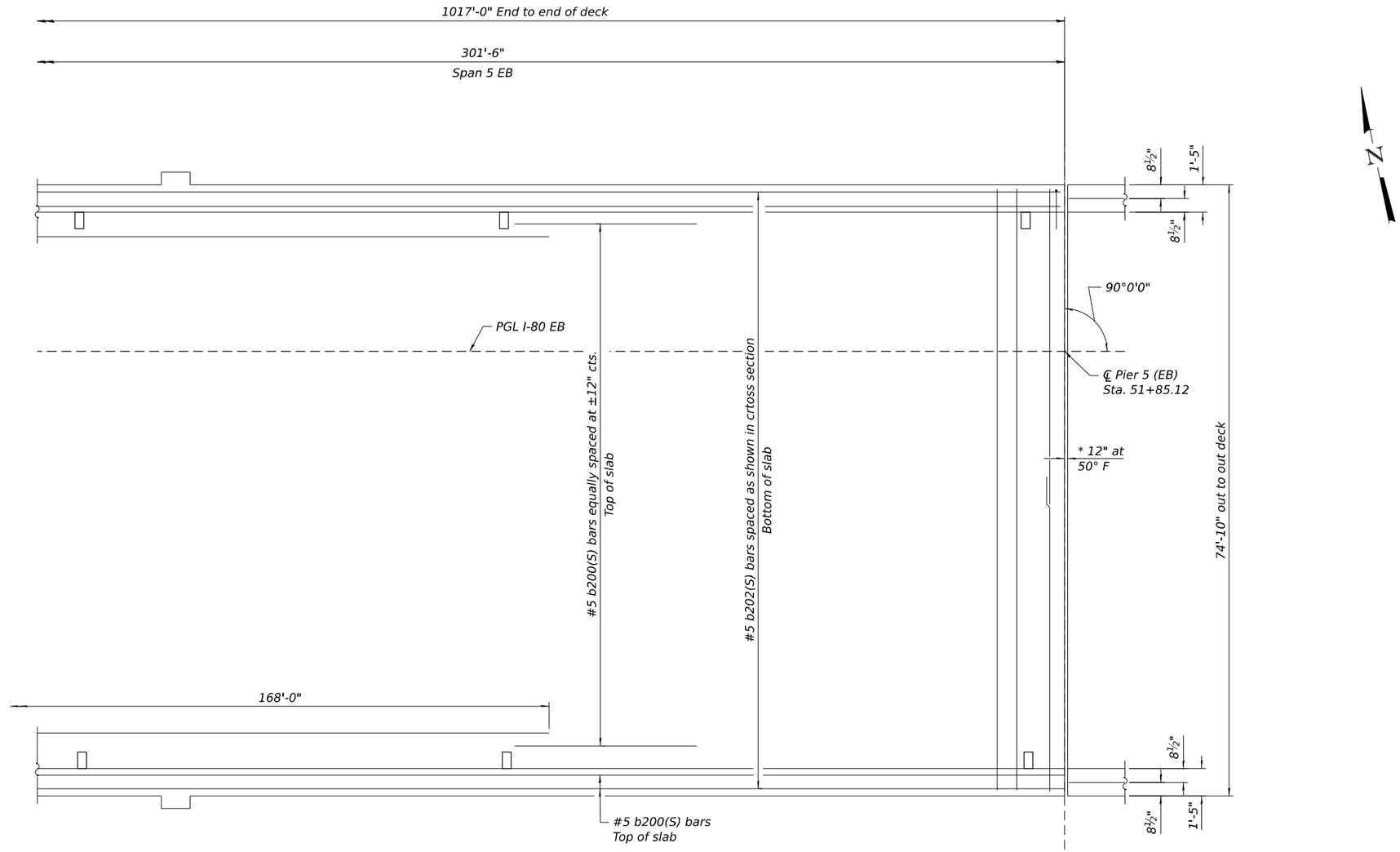


PLAN - UNIT 2 (EASTBOUND)

* Dimension showing concrete opening.
For joint opening see sheet S- of .

For bars near joint see sheet S- .

MINIMUM BAR LAP
#5 bar = 3'-6"
#6 bar = 4'-10"

Notes:
See sheet of for superstructure details and Bill of Material.
Bars indicated thus, 32 x 2 - #5 etc. indicates 32 lines of bars with 2 lengths per line.
For Cross Section see sheet

# FOR INFORMATION ONLY

MODEL: Default
FILE NAME: pw://transystems-pw.bentley.com:transyscorp-pw1-hosted/Documents/Projects_2018/CH401/401180022/03-WSP/CAD/62W52-SF-3/Sheets/0998309-62W52-S055-DEK210.dgn

WSP USA Inc.
30 N. LASALLE STREET
SUITE 4200
CHICAGO, IL 60602
TEL: (312) 782-8150
FAX: (312) 782-1684

| | | | |
|---|---|---|---|
| USER NAME = USCP702533 | DESIGNED - BK | REVISED - | |
| | CHECKED - LAS | REVISED - | |
| PLOT SCALE = 0:0 3/16 : / in. | DRAWN - BK | REVISED - | |
| PLOT DATE = 10/11/2024 | CHECKED - LAS | REVISED - | |

STATE OF ILLINOIS
DEPARTMENT OF TRANSPORTATION

DECK PLAN 3 - UNIT 2 EB
STRUCTURE NUMBER 099-8309 WB AND 099-8325 EB

SHEET S-55 OF S-87 SHEETS

| F.A.I RTE. | SECTION | COUNTY | TOTAL SHEETS | SHEET NO. |
|---|---|---|---|---|
| I-80 | (99-3DEFP) HF 23 | WILL | 89 | 57 |
| | | CONTRACT NO. 62W52 | | |
| | ILLINOIS | FED. AID PROJECT | | |

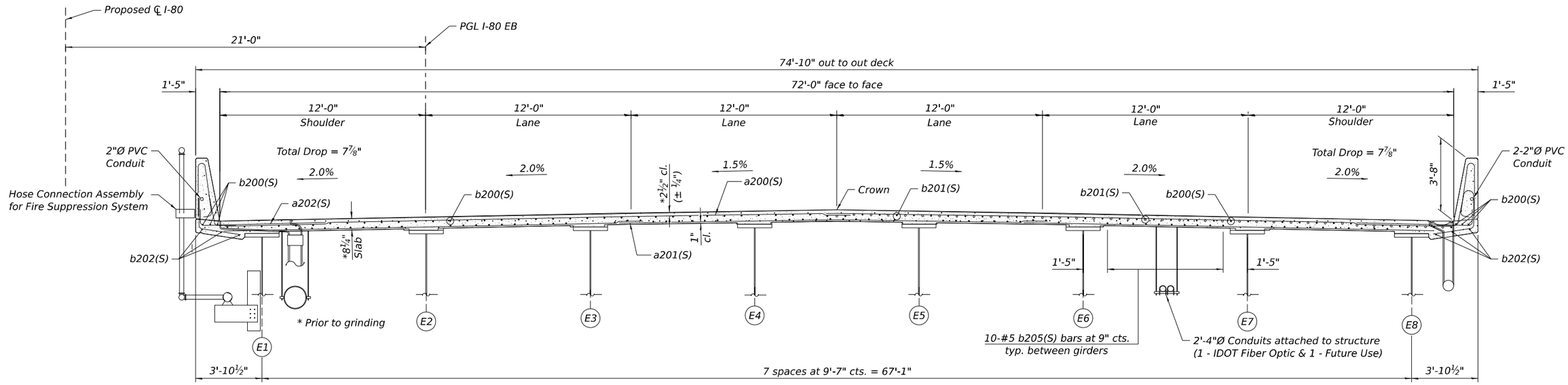


NEAR MIDSPAN

NEAR PIER

## CROSS SECTION - UNIT 2 (EB)

(Looking East)

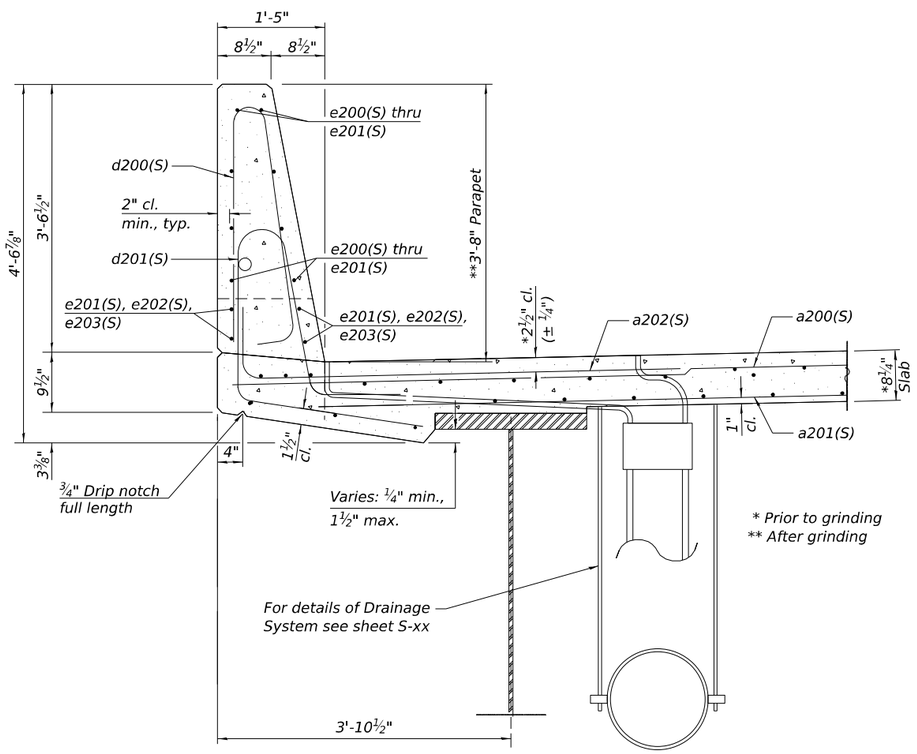


## SECTION THRU PARAPET

Drainage Scuppers (Special) shown,
Drainage Scupper , DS-11 similar

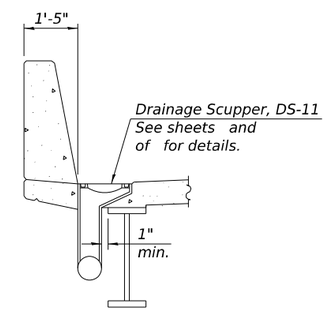


## SECTION A-A

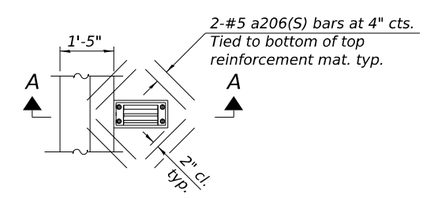


## PLAN

Drainage Scupper, DS-11 shown,
Drainage Scuppers (Special) similar

## MINIMUM BAR LAP

#5 bar = 3'-6"
#6 bar = 4'-10"

Note:
Cut longitudinal reinforcement to clear drainage scuppers.
Drains shall be located clear of all diaphragms.

# FOR INFORMATION ONLY

MODEL: Default
FILE NAME: pw://transystems-pw.bentley.com:transyscorp-pw1-hosted/Documents/Projects_2018/CH401/401180022/03-WSP/CAD/62W52-SR-3/Sheets/0998309-62W52-S056-DBK211.dgn


WSP USA Inc.
30 N. LASALLE STREET
SUITE 4200
CHICAGO, IL 60602
TEL: (312) 782-8150
FAX: (312) 782-1684


| | | | |
|---|---|---|---|
| USER NAME = USCP702533 | DESIGNED - BK | REVISED - | |
| | CHECKED - LAS | REVISED - | |
| PLOT SCALE = 0:0 3/16 : / in. | DRAWN - BK | REVISED - | |
| PLOT DATE = 10/11/2024 | CHECKED - LAS | REVISED - | |

**STATE OF ILLINOIS**
**DEPARTMENT OF TRANSPORTATION**

**DECK CROSS SECTION AND PARAPET - UNIT 2 EB**
**STRUCTURE NUMBER 099-8309 WB AND 099-8325 EB**

SHEET S-56 OF S-87 SHEETS

| F.A.I RTE. | SECTION | COUNTY | TOTAL SHEETS | SHEET NO. |
|---|---|---|---|---|
| I-80 | (99-3DEFP) HF 23 | WILL | 89 | 58 |
| | | CONTRACT NO. 62W52 | | |
| | ILLINOIS | FED. AID PROJECT | | |

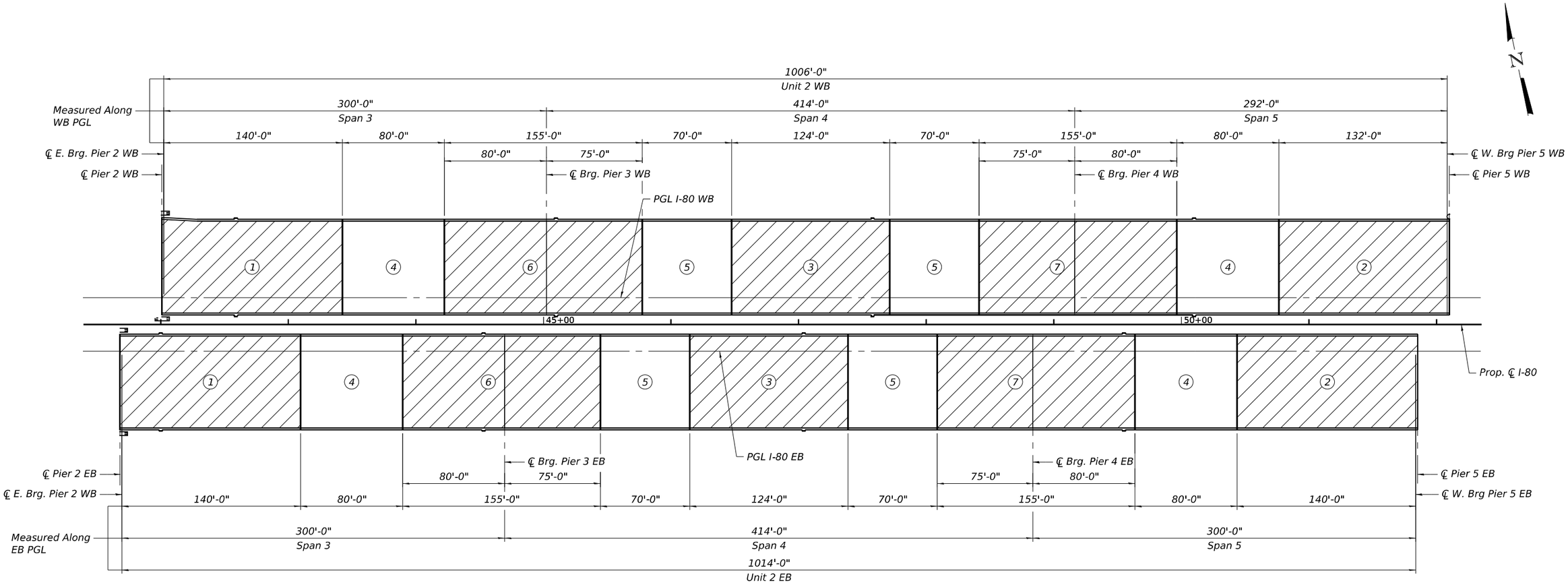


## DECK POURING SEQUENCE - UNIT 2

### NOTES ON DECK POURING SEQUENCE:

1. When the deck pour is stopped for the day at one or more of the transverse bonded construction joints in the deck pouring sequence as shown, the next pour shall not be made until both of the following are met:
   a. At least 72 hours shall have elapsed from the end of the previous pour.
   b. The concrete strength shall have attained a minimum flexural strength of 675 psi or a minimum compressive strength of 4000 psi.
2. See sheet S-77 for additional notes regarding the camber and the elevations being developed from the pour sequence.

# FOR INFORMATION ONLY

MODEL: Default
FILE NAME: pw://transystems-pw.bentley.com:transyscorp-pw1-hosted/Documents/Projects_2018/CH401/401180022/03-WSP/CAD/62W52-SF-3/Sheets/0998309-62W52-S057-SEQ02.dgn

WSP USA Inc.
30 N. LASALLE STREET
SUITE 4200
CHICAGO, IL 60602
TEL: (312) 782-8150
FAX: (312) 782-1684

| | | | |
|---|---|---|---|
| USER NAME = USSJ696614 | DESIGNED - KB | REVISED - | |
| | CHECKED - PSK | REVISED - | |
| PLOT SCALE = 0:2.0000 ':" / in. | DRAWN - GM | REVISED - | |
| PLOT DATE = 12/4/2024 | CHECKED - PSK | REVISED - | |

**STATE OF ILLINOIS**
**DEPARTMENT OF TRANSPORTATION**

**DECK POURING SEQUENCE - UNIT 2 WB & EB**
**STRUCTURE NUMBER 099-8309 WB AND 099-8325 EB**

SHEET S-57 OF S-87 SHEETS

| F.A.I RTE. | SECTION | COUNTY | TOTAL SHEETS | SHEET NO. |
|---|---|---|---|---|
| I-80 | (99-3DEFP) HF 23 | WILL | 89 | 59 |
| | | CONTRACT NO. 62W52 | | |
| | ILLINOIS | FED. AID PROJECT | | |

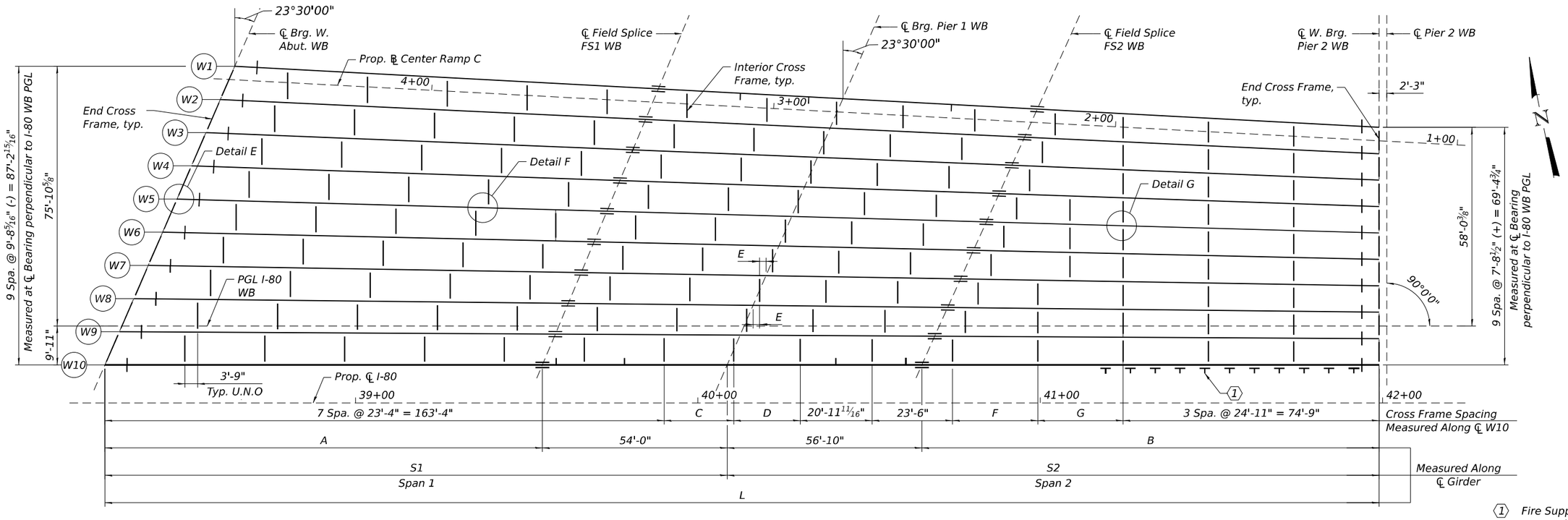


## FRAMING PLAN - UNIT 1 WB

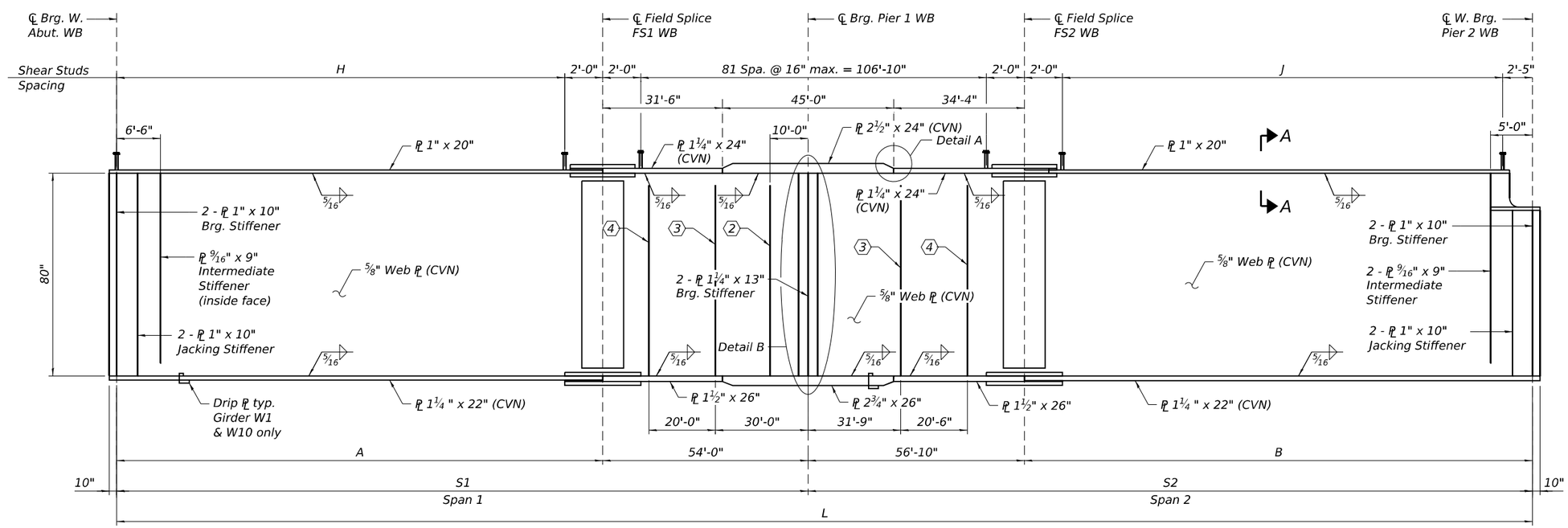


## GIRDER ELEVATION - UNIT 1 WB

1. Fire Suppression System support connection at 7'-3" max. spacing full length along Girder W-10
2. PL 9/16" x 9" Intermediate Stiffener at W1 (inside face)
3. PL 9/16" x 9" Intermediate Stiffener at W1 and W10 (inside face)
4. PL 9/16" x 9" Intermediate Stiffener at W10 (inside face)

## NOTES:

1. Load carrying components designated "CVN" shall conform to the Charpy-V-Notch Impact Energy Requirement, Zone 2.
2. All cross frames between girders shall be installed with erection pins and bolts in accordance with the erection plan approved by the Engineer. Individual cross frames at supports may be temporarily disconnected to install bearing anchor bolts.
3. All dimensions are horizontal.
4. For Framing Plan Details, Section A-A, and Detail A and Drip Plate details, see sheet S-60.
5. For Girder Moment and Reaction tables, see sheet S-61.
6. For Camber Diagram and Top of Web Elevation Table, see sheet S-63.
7. For Girder Bolted Field Splice Details, see sheet S-64.
8. For abutment cross frames, Detail E, and stiffener details, see sheet S-66.
9. For interior cross frames details, and Details F and G and fire suppression system details, see sheet S-67.
10. For Pier 2 cross frames details, see sheet S-68.
11. All interior cross frames are perpendicular to PGL WB.
12. All structural steel shall be AASHTO M270 Grade 50W.


WSP USA Inc.
30 N. LASALLE STREET
SUITE 4200
CHICAGO, IL 60602
TEL: (312) 782-8150
FAX: (312) 782-1684


| | | | |
|---|---|---|---|
| USER NAME = USFM703216 | DESIGNED - FIM | REVISED - | |
| | CHECKED - LAS | REVISED - | |
| PLOT SCALE = 32:0.0000 ':" / in. | DRAWN - FIM/MHD | REVISED - | |
| PLOT DATE = 12/7/2024 | CHECKED - LAS | REVISED - | |

**STATE OF ILLINOIS**
**DEPARTMENT OF TRANSPORTATION**

**FRAMING PLAN & ELEVATION - UNIT 1 WB**
**STRUCTURE NUMBER 099-8309 WB AND 099-8325 EB**

SHEET S-58 OF S-87 SHEETS

| F.A.I RTE. | SECTION | COUNTY | TOTAL SHEETS | SHEET NO. |
|---|---|---|---|---|
| I-80 | (99-3DEFP) HF 23 | WILL | 89 | 60 |
| | | CONTRACT NO. 62W52 | | |
| | ILLINOIS | FED. AID PROJECT | | |

MODEL: Default
FILE NAME: pw://transystems-pw.bentley.com:transyscorp-pw1-hosted/Documents/Projects_2018/CH401/401180022/03-WSP/CAD/62W52-SF-3/Sheets/0998309-62W52-S058-BM101.dgn

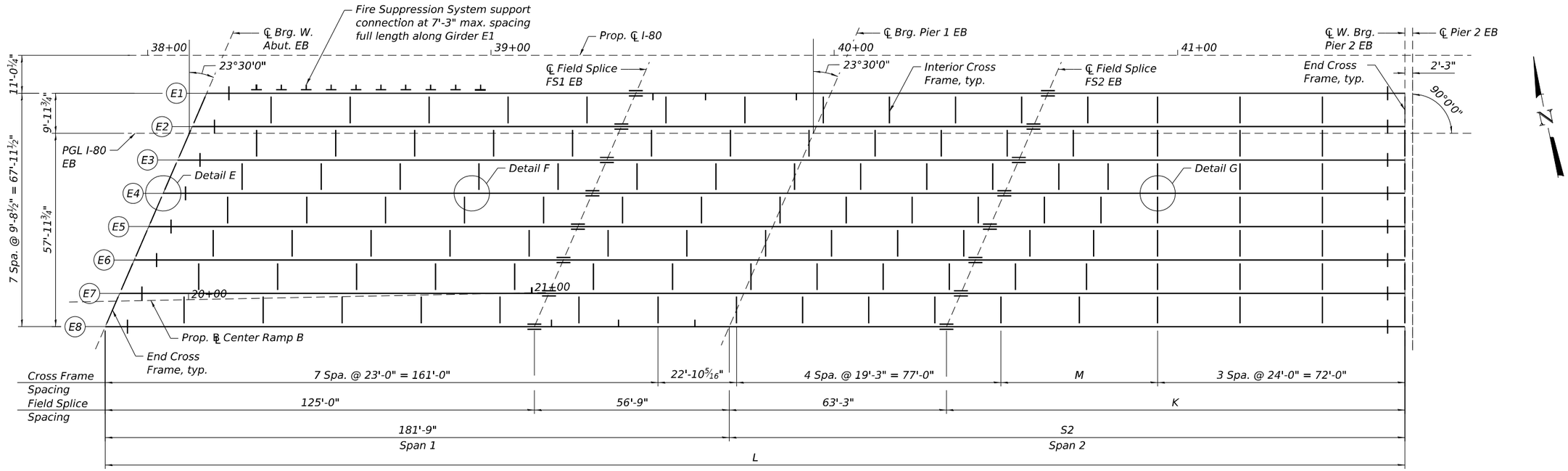


## FRAMING PLAN - UNIT 1 EB

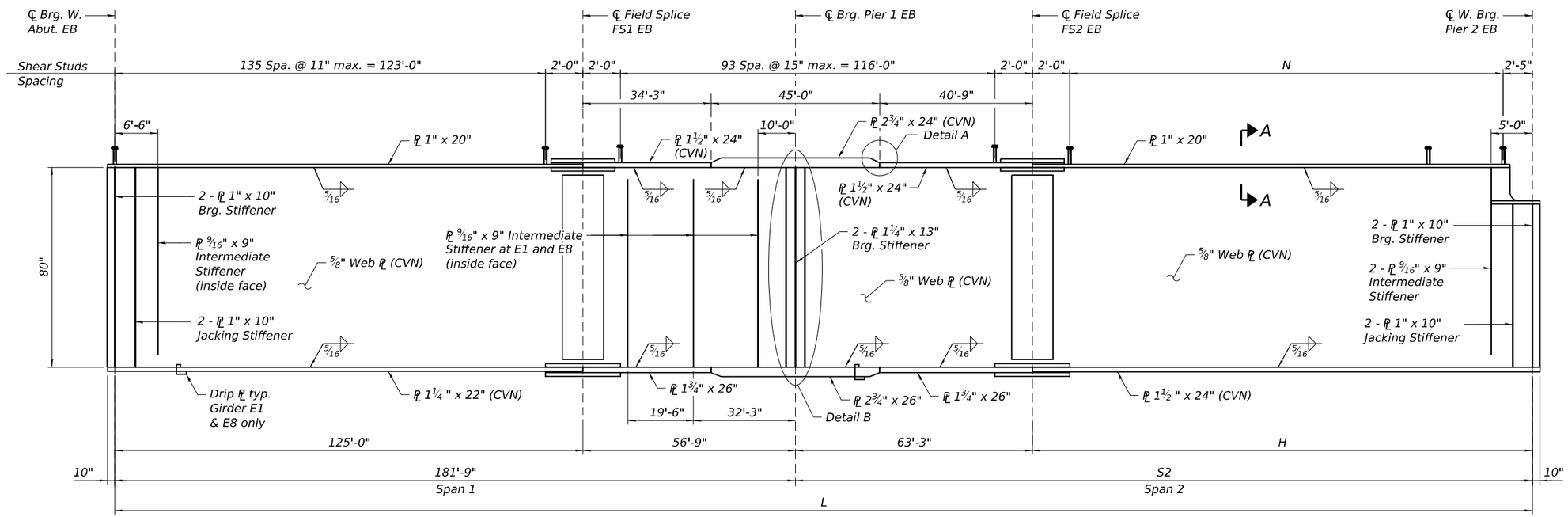


## GIRDER ELEVATION - UNIT 1 EB

## NOTES:

1. Load carrying components designated "CVN" shall conform to the Charpy-V-Notch Impact Energy Requirement, Zone 2.
2. All cross frames between girders shall be installed with erection pins and bolts in accordance with the erection plan approved by the Engineer. Individual cross frames at supports may be temporarily disconnected to install bearing anchor bolts.
3. All dimensions are horizontal.
4. For Framing Plan Details, Section A-A, and Detail A and Drip Plate details, see sheet S-60.
5. For Girder Moment and Reaction tables, see sheet S-62.
6. For Camber Diagram and Top of Web Elevation Table, see sheet S-63.
7. For Girder Bolted Field Splice Details, see sheet S-65.
8. For abutment cross frames, Detail E, and stiffener details, see sheet S-66.
9. For interior cross frames details, and Details F and G and fire suppression system details, see sheet S-67.
10. For Pier 2 cross frames details, see sheet S-68.
11. All interior cross frames are perpendicular to PGL EB.
12. All structural steel shall be AASHTO M270 Grade 50W.


WSP USA Inc.
30 N. LASALLE STREET
SUITE 4200
CHICAGO, IL 60602
TEL: (312) 782-8150
FAX: (312) 782-1684


| | | | |
|---|---|---|---|
| USER NAME = USFM703216 | DESIGNED - FIM | REVISED - | |
| | CHECKED - LAS | REVISED - | |
| PLOT SCALE = 32:0.0000 ':" / in. | DRAWN - FIM | REVISED - | |
| PLOT DATE = 12/7/2024 | CHECKED - LAS | REVISED - | |

**STATE OF ILLINOIS**
**DEPARTMENT OF TRANSPORTATION**

**FRAMING PLAN & ELEVATION - UNIT 1 EB**
**STRUCTURE NUMBER 099-8309 WB AND 099-8325 EB**

SHEET S-59 OF S-87 SHEETS

| F.A.I RTE. | SECTION | COUNTY | TOTAL SHEETS | SHEET NO. |
|---|---|---|---|---|
| I-80 | (99-3DEFP) HF 23 | WILL | 89 | 61 |
| | | CONTRACT NO. 62W52 | | |
| | ILLINOIS | FED. AID PROJECT | | |


MODEL: Default
FILE NAME: pw://transystems-pw.bentley.com:transyscorp-pw1-hosted/Documents/Projects_2018/CH401/401180022/03-WSP/CAD/62W52-SF-3/Sheets/0998309-62W52-S059-BM102.dgn

## GIRDER LENGTHS - UNIT 1 WB

| Girder | S1 | S2 | L |
|---|---|---|---|
| W1 | 177'-10 9/16" | 156'-9 5/8" | 334'-8 3/16" |
| W2 | 178'-3 3/4" | 160'-5 3/4" | 338'-9 1/2" |
| W3 | 178'-9" | 164'-2" | 342'-11" |
| W4 | 179'-2 3/16" | 167'-10 7/16" | 347'-0 5/8" |
| W5 | 179'-7 3/8" | 171'-1 1/16" | 351'-2 7/16" |
| W6 | 180'-0 9/16" | 175'-3 7/8" | 355'-4 7/16" |
| W7 | 180'-5 11/16" | 179'-0 13/16" | 359'-6 1/2" |
| W8 | 180'-10 13/16" | 182'-9 15/16" | 363'-8 3/4" |
| W9 | 181'-3 15/16" | 186'-7 1/4" | 367'-11 3/16" |
| W10 | 181'-9" | 190'-4 11/16" | 372'-1 11/16" |

## FIELD SPLICE SPACING - UNIT 1 WB

| Location | A | B |
|---|---|---|
| W1 | 123'-10 9/16" | 99'-11 5/8" |
| W2 | 124'-3 3/4" | 103'-7 3/4" |
| W3 | 124'-9" | 107'-4" |
| W4 | 125'-2 3/16" | 111'-0 7/16" |
| W5 | 125'-7 3/8" | 114'-9 1/16" |
| W6 | 126'-0 9/16" | 118'-5 7/8" |
| W7 | 126'-5 11/16" | 122'-2 13/16" |
| W8 | 126'-10 13/16" | 125'-11 15/16" |
| W9 | 127'-3 15/16" | 129'-9 1/4" |
| W10 | 127'-9" | 133'-6 11/16" |

## CROSS FRAME SPACING - UNIT 1 WB

| Location | C | D | E | F | G |
|---|---|---|---|---|---|
| W1-W2 | 20'-4 3/8" | 19'-4 5/8" | 1'-10 5/16" | 19'-10" | -- |
| W2-W3 | 20'-4 11/16" | 19'-4 5/16" | 1'-10 3/8" | 23'-7" | -- |
| W3-W4 | 20'-4 7/8" | 19'-4 1/8" | 1'-10 7/16" | 27'-4" | -- |
| W4-W5 | 20'-4 15/16" | 19'-4 1/16" | 1'-10 1/2" | 15'-6 1/2" | 15'-6 1/2" |
| W5-W6 | 20'-4 7/8" | 19'-4 1/8" | 1'-10 9/16" | 19'-3 1/2" | 15'-6 1/2" |
| W6-W7 | 20'-4 3/4" | 19'-4 1/4" | 1'-10 5/8" | 23'-0 1/2" | 15'-6 1/2" |
| W7-W8 | 20'-4 1/2" | 19'-4 1/2" | 1'-10 3/8" | 17'-5" | 24'-11" |
| W8-W9 | 20'-4 3/16" | 19'-4 13/16" | 1'-10 11/16" | 21'-2" | 24'-11" |
| W9-W10 | 20'-3 3/4" | 19'-5 1/4" | 1'-10 3/4" | 24'-11" | 24'-11" |

## SHEAR STUDS SPACING - UNIT 1 WB

| Location | H | J |
|---|---|---|
| W1 | 133 Spa. @ 11" max. = 121'-10 9/16" | 89 Spa. @ 13" max. = 95'-6 5/8" |
| W2 | 134 Spa. @ 11" max. = 122'-3 3/4" | 92 Spa. @ 13" max. = 99'-2 3/4" |
| W3 | 134 Spa. @ 11" max. = 122'-9" | 95 Spa. @ 13" max. = 102'-11" |
| W4 | 135 Spa. @ 11" max. = 123'-2 3/16" | 99 Spa. @ 13" max. = 106'-7 7/16" |
| W5 | 135 Spa. @ 11" max. = 123'-7 3/8" | 102 Spa. @ 13" max. = 110'-4 1/16" |
| W6 | 136 Spa. @ 11" max. = 124'-0 9/16" | 106 Spa. @ 13" max. = 114'-0 7/8" |
| W7 | 136 Spa. @ 11" max. = 124'-5 11/16" | 109 Spa. @ 13" max. = 117'-9 13/16" |
| W8 | 137 Spa. @ 11" max. = 124'-10 13/16" | 113 Spa. @ 13" max. = 121'-6 15/16" |
| W9 | 137 Spa. @ 11" max. = 125'-3 15/16" | 116 Spa. @ 13" max. = 125'-4 1/4" |
| W10 | 138 Spa. @ 11" max. = 125'-9" | 120 Spa. @ 13" max. = 129'-1 11/16" |

## GIRDER LENGTHS - UNIT 1 EB

| Girder | S2 | L |
|---|---|---|
| E1 | 167'-2 15/16" | 348'-11 15/16" |
| E2 | 171'-5 9/16" | 353'-2 9/16" |
| E3 | 175'-8 1/4" | 357'-5 1/4" |
| E4 | 179'-10 7/8" | 361'-7 7/8" |
| E5 | 184'-1 9/16" | 365'-10 9/16" |
| E6 | 188'-4 3/16" | 370'-1 3/16" |
| E7 | 192'-6 7/8" | 374'-3 7/8" |
| E8 | 196'-9 1/2" | 378'-6 1/2" |

## FIELD SPLICE SPACING - UNIT 1 EB

| Location | K |
|---|---|
| E1 | 103'-11 15/16" |
| E2 | 108'-2 9/16" |
| E3 | 112'-5 1/4" |
| E4 | 116'-7 7/8" |
| E5 | 120'-10 9/16" |
| E6 | 125'-1 3/16" |
| E7 | 129'-3 7/8" |
| E8 | 133'-6 1/2" |

## CROSS FRAME SPACING - UNIT 1 EB

| Location | M |
|---|---|
| E1 - E2 | 1 Spa. @ 20'-4 1/4" |
| E2 - E3 | 1 Spa. @ 24'-6 15/16" |
| E3 - E4 | 2 Spa. @ 14'-4 13/16" (-) |
| E4 - E5 | 2 Spa. @ 16'-6 1/8" |
| E5 - E6 | 2 Spa. @ 18'-7 7/16" |
| E6 - E7 | 2 Spa. @ 20'-8 13/16" (-) |
| E7 - E8 | 2 Spa. @ 22'-10 1/8" (-) |

## SHEAR STUDS SPACING - UNIT 1 EB

| Girder | N |
|---|---|
| E1 | 100 Spa. @ 12" max. = 99'-6 5/16" |
| E2 | 104 Spa. @ 12" max. = 103'-9 9/16" |
| E3 | 109 Spa. @ 12" max. = 108'-0 1/4" |
| E4 | 113 Spa. @ 12" max. = 112'-2 7/8" |
| E5 | 117 Spa. @ 12" max. = 116'-5 9/16" |
| E6 | 121 Spa. @ 12" max. = 120'-8 3/16" |
| E7 | 125 Spa. @ 12" max. = 124'-10 7/8" |
| E8 | 130 Spa. @ 12" max. = 129'-1 1/2" |

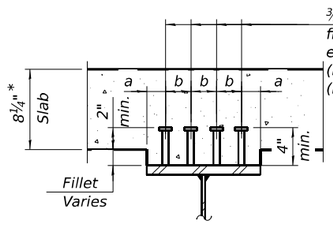


For information only, shear studs included with Contract 62R23

3/4" Ø Granular or solid flux filled headed studs automatically end welded to flange.
(No. Req'd. for WB = 12,944)
(No. Req'd. for EB = 11,068)

| Flange Width | a | b |
|---|---|---|
| 20" | 2 1/2" | 5" |
| 24" | 3" | 6" |

* Prior to grinding

## SECTION A-A

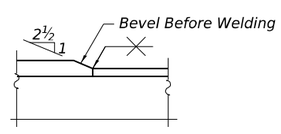


## DETAIL A

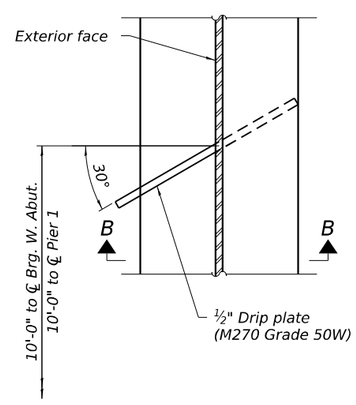


## DRIP PLATE - PLAN

(8 Required, see Framing Plans for locations)

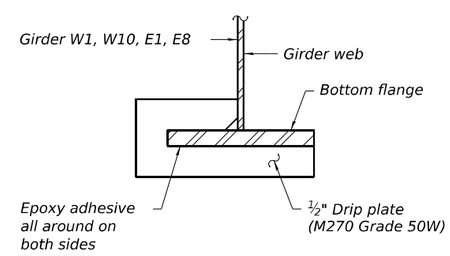


## SECTION B-B

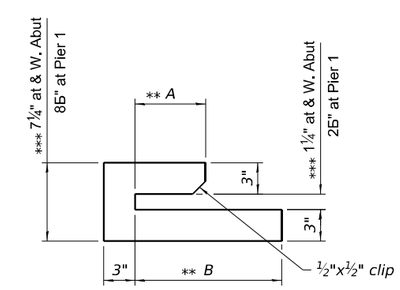


** Adjust A and B to fit girder bottom flange.
*** Adjust dimensions as required for thickness tolerance and fit-up.

## DRIP PLATE - ELEVATION

MODEL: Default
FILE NAME: pw://transystems-pw.bentley.com:transyscorp-pw1-hosted/Documents/Projects_2018/CH401/401180022/03-WSP/CAD/62W52-SF-3/Sheets/0998309-62W52-S060-BM103.dgn


WSP USA Inc.
30 N. LASALLE STREET
SUITE 4200
CHICAGO, IL 60602
TEL: (312) 782-8150
FAX: (312) 782-1684


| | | | |
|---|---|---|---|
| USER NAME = USCP702533 | DESIGNED - FIM | REVISED - | |
| | CHECKED - LAS | REVISED - | |
| PLOT SCALE = 32:0 ':" / in. | DRAWN - MHD | REVISED - | |
| PLOT DATE = 10/11/2024 | CHECKED - LAS | REVISED - | |

**STATE OF ILLINOIS**
**DEPARTMENT OF TRANSPORTATION**

**FRAMING PLAN DETAILS - UNIT 1 WB & EB**
**STRUCTURE NUMBER 099-8309 WB AND 099-8325 EB**

SHEET S-60 OF S-87 SHEETS

| F.A.I RTE. | SECTION | COUNTY | TOTAL SHEETS | SHEET NO. |
|---|---|---|---|---|
| I-80 | (99-3DEFP) HF 23 | WILL | 89 | 62 |
| | | CONTRACT NO. 62W52 | | |
| | ILLINOIS | FED. AID PROJECT | | |

| UNIT 1 WB INTERIOR GIRDER MOMENT TABLE | | | | |
|---|---|---|---|---|
| | | 0.4 Sp. 1 | Pier 1 | 0.6 Sp. 2 |
| $I_s$ | ($in^4$) | 103,895 | 249,950 | 103,895 |
| $I_c$ (n) | ($in^4$) | 225,133 | -- | 217,330 |
| $I_c$ (3n) | ($in^4$) | 166,518 | -- | 160,498 |
| $I_c$ (cr) | ($in^4$) | -- | 269,551 | -- |
| $S_s$ | ($in^3$) | 2,727 | 5,535 | 2,727 |
| $S_c$ (n) | ($in^3$) | 3,529 | -- | 3,497 |
| $S_c$ (3n) | ($in^3$) | 3,240 | -- | 3,202 |
| $S_c$ (cr) | ($in^3$) | -- | 6,270 | -- |
| DC1 | (k/') | 1.46 | 1.70 | 1.34 |
| $M_{DC1}$ | ('k) | 2,778 | 6,938 | 2,684 |
| DC2 | (k/') | 0.19 | 0.19 | 0.19 |
| $M_{DC2}$ | ('k) | 376 | 935 | 420 |
| DW | (k/') | 0.44 | 0.41 | 0.38 |
| $M_{DW}$ | ('k) | 916 | 1,998 | 818 |
| LLDF | | 0.628 | 0.594 | 0.568 |
| $M_{LL+IM}$ | ('k) | 3,201 | 3,753 | 2,996 |
| * $M_u$ (Strength I) | ('k) | 11,464 | 20,376 | 10,868 |
| $\Phi_f M_n$ | ('k) | 17,496 | -- | 17,428 |
| $f_s$ DC1 | (ksi) | 12.2 | 15.0 | 11.8 |
| $f_s$ DC2 | (ksi) | 1.4 | 1.8 | 1.6 |
| $f_s$ DW | (ksi) | 3.4 | 3.8 | 3.1 |
| $f_s$ (LL+IM) | (ksi) | 10.9 | 7.2 | 10.3 |
| $f_s$ (Service II) | (ksi) | 31.2 | 30.0 | 29.9 |
| Service II Resistance | (ksi) | 47.5 | 47.5 | 47.5 |
| * $f_s$ (Strength I) | (ksi) | -- | 41.3 | -- |
| $\Phi_f F_n$ | (ksi) | -- | 50.0 | -- |
| $V_f$ | (k) | 79.3 | 72.9 | 70.1 |

| UNIT 1 WB EXTERIOR GIRDER MOMENT TABLE | | | | |
|---|---|---|---|---|
| | | 0.4 Sp. 1 | Pier 1 | 0.6 Sp. 2 |
| $I_s$ | ($in^4$) | 103,895 | 249,950 | 103,895 |
| $I_c$ (n) | ($in^4$) | 217,622 | -- | 213,302 |
| $I_c$ (3n) | ($in^4$) | 160,716 | -- | 157,547 |
| $I_c$ (cr) | ($in^4$) | -- | 267,756 | -- |
| $S_s$ | ($in^3$) | 2,727 | 5,535 | 2,727 |
| $S_c$ (n) | ($in^3$) | 3,498 | -- | 3,480 |
| $S_c$ (3n) | ($in^3$) | 3,203 | -- | 3,183 |
| $S_c$ (cr) | ($in^3$) | -- | 6,199 | -- |
| DC1 | (k/') | 1.38 | 1.64 | 1.32 |
| $M_{DC1}$ | ('k) | 2,588 | 6,894 | 2,871 |
| DC2 | (k/') | 0.19 | 0.19 | 0.19 |
| $M_{DC2}$ | ('k) | 370 | 957 | 444 |
| DW | (k/') | 0.44 | 0.41 | 0.38 |
| $M_{DW}$ | ('k) | 907 | 2,042 | 867 |
| LLDF | | 0.628 | 0.592 | 0.566 |
| $M_{LL+IM}$ | ('k) | 3,229 | 3,810 | 3,072 |
| * $M_u$ (Strength I) | ('k) | 11,244 | 20,521 | 11,361 |
| $\Phi_f M_n$ | ('k) | 17,470 | -- | 17,260 |
| $f_s$ DC1 | (ksi) | 11.4 | 14.9 | 12.6 |
| $f_s$ DC2 | (ksi) | 1.4 | 1.9 | 1.7 |
| $f_s$ DW | (ksi) | 3.4 | 4.0 | 3.3 |
| $f_s$ (LL+IM) | (ksi) | 11.1 | 7.4 | 10.6 |
| $f_s$ (Service II) | (ksi) | 30.6 | 30.4 | 31.4 |
| Service II Resistance | (ksi) | 47.5 | 47.5 | 47.5 |
| * $f_s$ (Strength I) | (ksi) | -- | 41.8 | -- |
| $\Phi_f F_n$ | (ksi) | -- | 50.0 | -- |
| $V_f$ | (k) | 79.7 | 72.8 | 69.7 |

| UNIT 1 WB INTERIOR GIRDER REACTION TABLE | | | | |
|---|---|---|---|---|
| | | W. Abut. | Pier 1 | Pier 2 |
| LLDF | | 1.012 | 0.928 | 0.863 |
| OCF | | -- | -- | -- |
| $R_{DC1}$ | (k) | 91.3 | 339.6 | 83.6 |
| $R_{DC2}$ | (k) | 12.1 | 45.1 | 12.7 |
| $R_{DW}$ | (k) | 29.0 | 97.2 | 24.9 |
| $R_{LL}$ | (k) | 118.3 | 242.7 | 101.8 |
| $R_{IM}$ | (k) | 22.4 | 37.8 | 19.1 |
| * $R_{Total}$ (Strength I)(Impact) | (k) | 439.9 | 1173.4 | 387.9 |
| * $R_{Total}$ (Strength I)(No Impact) | (k) | 398.7 | 1103.9 | 352.7 |

| UNIT 1 WB EXTERIOR GIRDER REACTION TABLE | | | | |
|---|---|---|---|---|
| | | W. Abut. | Pier 1 | Pier 2 |
| LLDF | | 1.012 | 0.928 | 0.863 |
| OCF | | 1.087 | -- | -- |
| $R_{DC1}$ | (k) | 85.9 | 334.4 | 86.7 |
| $R_{DC2}$ | (k) | 12.0 | 45.7 | 13.1 |
| $R_{DW}$ | (k) | 28.9 | 98.2 | 25.6 |
| $R_{LL}$ | (k) | 118.6 | 244.2 | 102.7 |
| $R_{IM}$ | (k) | 22.4 | 37.9 | 19.1 |
| * $R_{Total}$ (Strength I)(Impact) | (k) | 433.0 | 1171.7 | 395.1 |
| * $R_{Total}$ (Strength I)(No Impact) | (k) | 391.9 | 1102.3 | 360.0 |

* Limit states for moment, stress, and reaction shown include a load modifier factor of 1.05 relating to operational classification for an essential bridge

Note:
Moments and Reactions are for Girders W9 and W10.

$I_s$ , $S_s$ : Non-composite moment of inertia and section modulus of the steel section used for computing $f_s$ (Total-Strength I, and Service II) due to non-composite dead loads ($in.^4$ and $in.^3$).

$I_c$ (n), $S_c$ (n): Composite moment of inertia and section modulus of the steel and deck based upon the modular ratio, "n", used for computing $f_s$ (Total-Strength I, and Service II) in uncracked sections due to short-term composite live loads ($in.^4$ and $in.^3$).

$I_c$ (3n), $S_c$ (3n): Composite moment of inertia and section modulus of the steel and deck based upon 3 times the modular ratio, "3n", used for computing $f_s$ (Total-Strength I, and Service II) in uncracked sections, due to long-term composite (superimposed) dead loads ($in.^4$ and $in.^3$).

$I_c$ (cr), $S_c$ (cr): Composite moment of inertia and section modulus of the steel and longitudinal deck reinforcement, used for computing $f_s$ (Total-Strength I and Service II) in cracked sections, due to both short-term composite live loads and long-term composite (superimposed) dead loads ($in.^4$ and $in.^3$).

DC1: Un-factored non-composite dead load (kips/ft.).

$M_{DC1}$: Un-factored moment due to non-composite dead load (kip-ft.).

DC2: Un-factored long-term composite (superimposed excluding future wearing surface) dead load (kips/ft.).

$M_{DC2}$: Un-factored moment due to long-term composite (superimposed excluding future wearing surface) dead load (kip-ft.).

DW: Un-factored long-term composite (superimposed future wearing surface only) dead load (kips/ft.).

$M_{DW}$ : Un-factored moment due to long-term composite (superimposed future wearing surface only) dead load (kip-ft.).

LLDF: Live Load Distribution Factor for moment and shear computed from a refined analysis. The multiple presence factors are implicitly included in the values shown.

$M_{LL+IM}$: Un-factored live load moment plus dynamic load allowance (impact) (kip-ft.).

$M_u$ : Strength I load combination of factored design moments (kip-ft.).
$1.25\ (M_{DC1} + M_{DC2}) + 1.5\ M_{DW} + 1.75\ M_{LL+IM}$

$\Phi_f M_n$ : Factored nominal flexural resistance of the section determined as specified in Article 6.10.7.1 or A6 as applicable (kip-ft.).

$f_s$ DC1: Un-factored stress at edge of flange for controlling steel flange due to vertical non-composite dead loads as calculated below (ksi).
$M_{DC1} / S_s$

$f_s$ DC2: Un-factored stress at edge of flange for controlling steel flange due to vertical composite dead loads as calculated below (ksi).
$M_{DC2} / S_c$ (3n) or $M_{DC2} / S_c$ (cr) as applicable.

$f_s$ DW: Un-factored stress at edge of flange for controlling steel flange due to vertical composite future wearing surface loads as calculated below (ksi).
$M_{DW} / S_c$ (3n) or $M_{DW} / S_c$ (cr) as applicable.

$f_s$ (LL+ IM): Un-factored stress at edge of flange for controlling steel flange due to vertical composite live load plus impact loads as calculated below (ksi).
$M_{LL+IM} / S_c$ (n) or $M_{LL+IM} / S_c$ (cr) as applicable.

$f_s$ (Service II): Sum of stresses as computed below (ksi).
$f_s$ DC1 + $f_s$ DC2 + $f_s$ DW + 1.3 $f_s$ (LL+ IM)

Service II Resistance: Composite ($0.95R_hF_{yf}$) stress capacity according to Article 6.10.4.2 or web bend buckling (Fcrw) stress according to Article 6.10.1.9.1 (ksi).

$f_s$ (Strength I): Sum of stresses as computed below on non-compact sections (ksi).
$1.25\ (f_s DC1 + f_s DC2) + 1.5\ f_s DW + 1.75\ f_s (LL+ IM)$

$\Phi_f F_n$: Factored nominal flexural resistance of the section as specified in Article 6.10.7.2 or 6.10.8 as applicable (ksi).

$V_f$: Maximum factored shear range in span computed according to Article 6.10.10.

OCF: Obtuse Correction Factor according to Article 4.6.2.2.3c or as further simplified by IDOT provisions.

$R_{DC1}$: Un-factored reaction due to non-composite dead load (kip).

$R_{DC2}$: Un-factored reaction due to long-term composite (superimposed excluding future wearing surface) dead load (kip).

$R_{DW}$ : Un-factored reaction due to long-term composite (superimposed future wearing surface only) dead load (kip).

$R_{LL}$ : Un-factored live load reaction (kip).

$R_{IM}$ : Un-factored dynamic load allowance (impact) (kip).

$R_{Total}$ (Strength I)(Impact): Strength I load combination of factored design reactions (kip).
$1.25\ (R_{DC1} + R_{DC2}) + 1.5R_{DW} + 1.75\ (R_{LL} + R_{IM})$

$R_{Total}$ (Strength I)(No Impact): Strength I load combination of factored design reactions, not including dynamic load allowance (Impact) (kip).
$1.25\ (R_{DC1} + R_{DC2}) + 1.5R_{DW} + 1.75\ (R_{LL})$

| UNIT 1 EB GIRDER MOMENT TABLE | | | | |
|---|---|---|---|---|
| | | 0.4 Sp. 1 | Pier 1 | 0.6 Sp. 2 |
| $I_s$ | (in⁴) | 103,895 | 261,862 | 115,188 |
| $I_c$ (n) | (in⁴) | 227,577 | -- | 261,292 |
| $I_c$ (3n) | (in⁴) | 168,491 | -- | 189,984 |
| $I_c$ (cr) | (in⁴) | -- | 282,716 | -- |
| $S_s$ | (in³) | 2,727 | 6,304 | 3,263 |
| $S_c$ (n) | (in³) | 3,539 | -- | 4,207 |
| $S_c$ (3n) | (in³) | 3,252 | -- | 3,875 |
| $S_c$ (cr) | (in³) | -- | 6,450 | -- |
| DC1 | (k/ft) | 1.44 | 1.75 | 1.47 |
| $M_{DC1}$ | (ft k) | 2,665 | 7,920 | 3,483 |
| DC2 | (k/ft) | 0.19 | 0.19 | 0.19 |
| $M_{DC2}$ | (ft k) | 368 | 962 | 461 |
| DW | (k/ft) | 0.45 | 0.45 | 0.45 |
| $M_{DW}$ | (ft k) | 872 | 2,278 | 1,091 |
| LLDF | | 0.650 | 0.647 | 0.644 |
| $M_{LL+IM}$ | (ft k) | 3,296 | 4,108 | 3,579 |
| * $M_u$ (Strength I) | (ft k) | 11,411 | 22,794 | 13,471 |
| $\Phi_f M_n$ | (ft k) | 17,601 | -- | 20,808 |
| $f_s$ DC1 | (ksi) | 11.7 | 15.1 | 12.8 |
| $f_s$ DC2 | (ksi) | 1.4 | 1.8 | 1.4 |
| $f_s$ DW | (ksi) | 3.2 | 4.2 | 3.4 |
| $f_s$ (LL+IM) | (ksi) | 11.2 | 7.6 | 10.2 |
| $f_s$ (Service II) | (ksi) | 30.9 | 31.1 | 30.9 |
| Service II Resistance | (ksi) | 47.5 | 47.5 | 47.5 |
| * $f_s$ (Strength I) | (ksi) | - | 43.0 | - |
| $\Phi_f F_n$ | (ksi) | - | 50.0 | - |
| $V_f$ | (k) | 78.9 | 77.2 | 77.8 |

| UNIT 1 EB GIRDER REACTION TABLE | | | | |
|---|---|---|---|---|
| | | W. Abut. | Pier 1 | Pier 2 |
| LLDF | | 1.013 | 1.013 | 1.013 |
| OCF | | -- | -- | -- |
| $R_{DC1}$ | (k) | 90.3 | 378.4 | 103.1 |
| $R_{DC2}$ | (k) | 12.0 | 45.9 | 13.3 |
| $R_{DW}$ | (k) | 28.4 | 108.6 | 31.5 |
| $R_{LL}$ | (k) | 118.6 | 263.4 | 122.1 |
| $R_{Im}$ | (k) | 22.4 | 40.7 | 22.6 |
| * $R_{Total}$(Strength I)(Impact) | (k) | 438.1 | 1286.7 | 468.2 |
| * $R_{Total}$(Strength I)(No Impact) | (k) | 396.8 | 1211.9 | 426.7 |

** Limit states for moment, stress, and reaction shown include a load modifier factor of 1.05 relating to operational classification for an essential bridge.*

$I_s$ , $S_s$ : Non-composite moment of inertia and section modulus of the steel section used for computing $f_s$ (Total-Strength I, and Service II) due to non-composite dead loads (in.⁴ and in.³).

$I_c$ (n), $S_c$ (n): Composite moment of inertia and section modulus of the steel and deck based upon the modular ratio, "n", used for computing $f_s$ (Total-Strength I, and Service II) in uncracked sections due to short-term composite live loads (in.⁴ and in.³).

$I_c$ (3n), $S_c$ (3n): Composite moment of inertia and section modulus of the steel and deck based upon 3 times the modular ratio, "3n", used for computing $f_s$ (Total-Strength I, and Service II) in uncracked sections, due to long-term composite (superimposed) dead loads (in.⁴ and in.³).

$I_c$ (cr), $S_c$ (cr): Composite moment of inertia and section modulus of the steel and longitudinal deck reinforcement, used for computing $f_s$ (Total-Strength I and Service II) in cracked sections, due to both short-term composite live loads and long-term composite (superimposed) dead loads (in.⁴ and in.³).

DC1: Un-factored non-composite dead load (kips/ft.).

$M_{DC1}$: Un-factored moment due to non-composite dead load (kip-ft.).

DC2: Un-factored long-term composite (superimposed excluding future wearing surface) dead load (kips/ft.).

$M_{DC2}$: Un-factored moment due to long-term composite (superimposed excluding future wearing surface) dead load (kip-ft.).

DW: Un-factored long-term composite (superimposed future wearing surface only) dead load (kips/ft.).

$M_{DW}$ : Un-factored moment due to long-term composite (superimposed future wearing surface only) dead load (kip-ft.).

LLDF: Live Load Distribution Factor for moment and shear computed according to Article 4.6.2.2 and further IDOT provisions.

$M_{LL+IM}$: Un-factored live load moment plus dynamic load allowance (impact) (kip-ft.).

$M_u$ : Strength I load combination of factored design moments (kip-ft.).
$1.25\ (M_{DC1} + M_{DC2}) + 1.5\ M_{DW} + 1.75\ M_{LL+IM}$

$\Phi_f M_n$ : Factored nominal flexural resistance of the section determined as specified in Article 6.10.7.1 or A6 as applicable (kip-ft.).

$f_s$ DC1: Un-factored stress at edge of flange for controlling steel flange due to vertical non-composite dead loads as calculated below (ksi).
$M_{DC1} / S_s$

$f_s$ DC2: Un-factored stress at edge of flange for controlling steel flange due to vertical composite dead loads as calculated below (ksi).
$M_{DC2} / S_c$ (3n) or $M_{DC2} / S_c$ (cr) as applicable.

$f_s$ DW: Un-factored stress at edge of flange for controlling steel flange due to vertical composite future wearing surface loads as calculated below (ksi).
$M_{DW} / S_c$ (3n) or $M_{DW} / S_c$ (cr) as applicable.

$f_s$ (LL+ IM): Un-factored stress at edge of flange for controlling steel flange due to vertical composite live load plus impact loads as calculated below (ksi).
$M_{LL+IM} / S_c$ (n) or $M_{LL+IM} / S_c$ (cr) as applicable.

$f_s$ (Service II): Sum of stresses as computed below (ksi).
$f_s$ DC1 + $f_s$ DC2 + $f_s$ DW + 1.3 $f_s$ (LL+ IM)

Service II Resistance: Composite ($0.95R_hF_{yf}$) or noncomposite ($0.80R_hF_{yf}$) stress capacity according to Article 6.10.4.2 (ksi).

$f_s$ (Strength I): Sum of stresses as computed below on non-compact sections (ksi).
1.25 ($f_s$ DC1 + $f_s$ DC2) + 1.5 $f_s$ DW + 1.75 $f_s$ (LL+ IM)

$\Phi_f F_n$ : Factored nominal flexural resistance of the section as specified in Article 6.10.7.2 or 6.10.8 as applicable (ksi).

$V_f$: Maximum factored shear range in span computed according to Article 6.10.10.

OCF: Obtuse Correction Factor according to Article 4.6.2.2.3c or as further simplified by IDOT provisions.

$R_{DC1}$: Un-factored reaction due to non-composite dead load (kip).

$R_{DC2}$: Un-factored reaction due to long-term composite (superimposed excluding future wearing surface) dead load (kip).

$R_{DW}$ : Un-factored reaction due to long-term composite (superimposed future wearing surface only) dead load (kip).

$R_{LL}$ : Un-factored live load reaction (kip).

$R_{IM}$ : Un-factored dynamic load allowance (impact) (kip).

$R_{Total}$(Strength I)(Impact): Strength I load combination of factored design reactions (kip).
$1.25\ (R_{DC1} + R_{DC2}) + 1.5R_{DW} + 1.75\ (R_{LL} + R_{IM})$

$R_{Total}$(Strength I)(No Impact): Strength I load combination of factored design reactions, not including dynamic load allowance (Impact) (kip).
$1.25\ (R_{DC1} + R_{DC2}) + 1.5R_{DW} + 1.75\ (R_{LL})$

Note:
Moments and Reactions are for Girder E7.

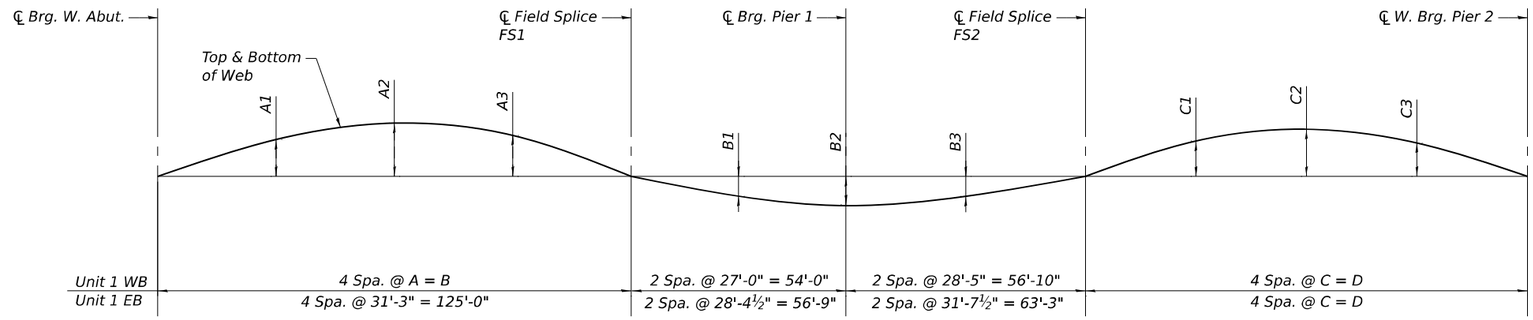


## CAMBER DIAGRAM - UNIT 1

## CAMBER DIMENSIONS - UNIT 1 WB

| Location | ℄ Brg. W. Abut. WB | A1 | A2 | A3 | ℄ Field Splice FS1 WB | B1 | B2 | B3 | ℄ Field Splice FS2 WB | C1 | C2 | C3 | ℄ W. Brg. Pier 2 WB | A | B | C | D |
|---|---|---|---|---|---|---|---|---|---|---|---|---|---|---|---|---|---|
| Girder W1 | 0" | 2" | 2½" | 2" | 0" | -½" | -1¼" | -½" | 0" | 1¾" | 2" | 1¼" | 0" | ±30'-11⅝" | 123'-10 9/16" | ±24'-11 15/16" | 99'-11⅝" |
| Girder W2 | 0" | 2¼" | 2¾" | 2" | 0" | -½" | -1¼" | -½" | 0" | 1¾" | 2" | 1½" | 0" | 31'-0 15/16" | 124'-3¾" | ±25'-10 15/16" | 103'-7¾" |
| Girder W3 | 0" | 2¼" | 3" | 2" | 0" | -½" | -1½" | -½" | 0" | 2" | 2¼" | 1½" | 0" | 31'-2¼" | 124'-9" | 26'-10" | 107'-4" |
| Girder W4 | 0" | 2½" | 3" | 2¼" | 0" | -½" | -1½" | -½" | 0" | 2¼" | 2½" | 1¾" | 0" | ±31'-3 9/16" | 125'-2 3/16" | ±27'-9⅛" | 111'-0 7/16" |
| Girder W5 | 0" | 2¼" | 3¼" | 2½" | 0" | -½" | -1½" | -½" | 0" | 2½" | 2¾" | 2" | 0" | ±31'-4⅞" | 125'-7⅜" | ±28'-8¼" | 114'-9 1/16" |
| Girder W6 | 0" | 2½" | 3¾" | 3" | 0" | -½" | -1½" | -½" | 0" | 2½" | 3" | 2¼" | 0" | ±31'-6⅛" | 126'-0 9/16" | ±29'-7 7/16" | 118'-5⅞" |
| Girder W7 | 0" | 2¾" | 4" | 3¼" | 0" | -½" | -1½" | -½" | 0" | 2¾" | 3¼" | 2¼" | 0" | ±31'-7 7/16" | 126'-5 11/16" | ±30'-6 11/16" | 122'-2 13/16" |
| Girder W8 | 0" | 2¾" | 4" | 3¼" | 0" | -½" | -1½" | -½" | 0" | 3" | 3¾" | 2½" | 0" | ±31'-8 11/16" | 126'-10 13/16" | ±31'-6" | 125'-11 15/16" |
| Girder W9 | 0" | 2¾" | 4" | 3¼" | 0" | -½" | -1¾" | -½" | 0" | 3¼" | 4" | 2¾" | 0" | ±31'-10" | 127'-3 15/16" | 32'-5 5/16" | 129'-9¼" |
| Girder W10 | 0" | 2¾" | 3¾" | 3" | 0" | -½" | -1¾" | -½" | 0" | 3½" | 4¼" | 3" | 0" | 31'-11¼" | 127'-9" | ±33'-4 11/16" | 133'-6 11/16" |

## TOP OF WEB ELEVATION - UNIT 1 WB

(For Fabrication Only)

| Location | ℄ Brg. W. Abut. WB | ℄ Field Splice FS1 WB | ℄ Brg. Pier 1 WB | ℄ Field Splice FS2 WB | ℄ W. Brg. Pier 2 WB |
|---|---|---|---|---|---|
| Girder W1 | 596.151 | 598.544 | 599.278 | 600.268 | 601.574 |
| Girder W2 | 596.272 | 598.662 | 599.390 | 600.390 | 601.729 |
| Girder W3 | 596.389 | 598.766 | 599.501 | 600.515 | 601.883 |
| Girder W4 | 596.506 | 598.871 | 599.612 | 600.640 | 602.037 |
| Girder W5 | 596.406 | 598.964 | 599.710 | 600.747 | 602.154 |
| Girder W6 | 596.283 | 599.025 | 599.777 | 600.832 | 602.270 |
| Girder W7 | 596.091 | 598.870 | 599.610 | 600.655 | 602.062 |
| Girder W8 | 595.832 | 598.636 | 599.393 | 600.467 | 601.914 |
| Girder W9 | 595.535 | 598.373 | 599.155 | 600.262 | 601.760 |
| Girder W10 | 595.238 | 598.100 | 598.915 | 600.056 | 601.606 |

## CAMBER DIMENSIONS - UNIT 1 EB

| Location | ℄ Brg. W. Abut. EB | A1 | A2 | A3 | ℄ Field Splice FS1 EB | B1 | B2 | B3 | ℄ Field Splice FS2 EB | C1 | C2 | C3 | ℄ W. Brg. Pier 2 EB | C | D |
|---|---|---|---|---|---|---|---|---|---|---|---|---|---|---|---|
| Girder E1 | 0" | 2¾" | 4" | 3½" | 0" | -½" | -1½" | -½" | 0" | 2¼" | 2½" | 1¾" | 0" | ±26'-0" | 103'-11 15/16" |
| Girder E2 | 0" | 3" | 4¼" | 3½" | 0" | -½" | -1¼" | -½" | 0" | 3" | 3" | 2" | 0" | ±27'-0⅝" | 108'-2 9/16" |
| Girder E3 | 0" | 3" | 4¼" | 3½" | 0" | -½" | -1½" | -½" | 0" | 2¾" | 3¼" | 2" | 0" | ±28'-1 5/16" | 112'-5¼" |
| Girder E4 | 0" | 2¾" | 4" | 3½" | 0" | -½" | -1½" | -½" | 0" | 3" | 3½" | 2¼" | 0" | ±29'-1 15/16" | 116'-7⅞" |
| Girder E5 | 0" | 2¾" | 4" | 3¼" | 0" | -½" | -1½" | -½" | 0" | 3¼" | 3¾" | 2½" | 0" | ±30'-2⅝" | 120'-10 9/16" |
| Girder E6 | 0" | 2¾" | 4" | 3¼" | 0" | -½" | -1¼" | -½" | 0" | 3½" | 4¼" | 3" | 0" | ±31'-3 5/16" | 125'-1 3/16" |
| Girder E7 | 0" | 2¾" | 4" | 3¼" | 0" | -½" | -1¼" | -½" | 0" | 3¾" | 4½" | 3¼" | 0" | ±32'-4" | 129'-3⅞" |
| Girder E8 | 0" | 2½" | 3¾" | 3" | 0" | -½" | -1" | -½" | 0" | 4¼" | 5" | 3½" | 0" | 33'-4⅝" | 133'-6½" |

## TOP OF WEB ELEVATION - UNIT 1 EB

(For Fabrication Only)

| Location | ℄ Brg. W. Abut. EB | ℄ Field Splice FS1 EB | ℄ Brg. Pier 1 EB | ℄ Field Splice FS2 EB | ℄ W. Brg. Pier 2 EB |
|---|---|---|---|---|---|
| Girder E1 | 594.999 | 597.898 | 598.725 | 599.912 | 601.266 |
| Girder E2 | 595.088 | 598.005 | 598.844 | 600.014 | 601.460 |
| Girder E3 | 594.890 | 598.069 | 598.963 | 600.219 | 601.655 |
| Girder E4 | 594.666 | 598.108 | 599.045 | 600.336 | 601.813 |
| Girder E5 | 594.409 | 597.989 | 598.968 | 600.293 | 601.813 |
| Girder E6 | 594.121 | 597.710 | 598.732 | 600.090 | 601.655 |
| Girder E7 | 593.797 | 597.394 | 598.459 | 599.849 | 601.460 |
| Girder E8 | 593.472 | 597.070 | 598.185 | 599.607 | 601.266 |

## NOTES:

1. For framing plan and girder elevations, see Sheets S-58 and S-59.

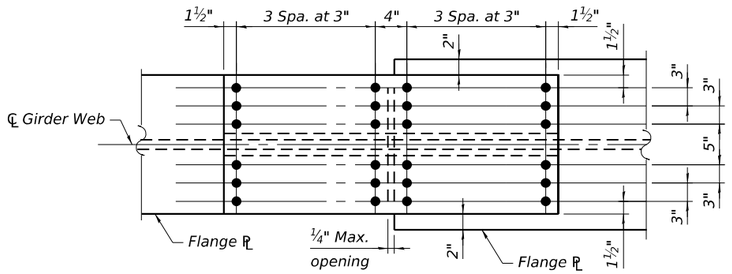


## TOP FLANGE

Field Splice FS1 WB
Field Splice FS2 WB similar but opposite hand

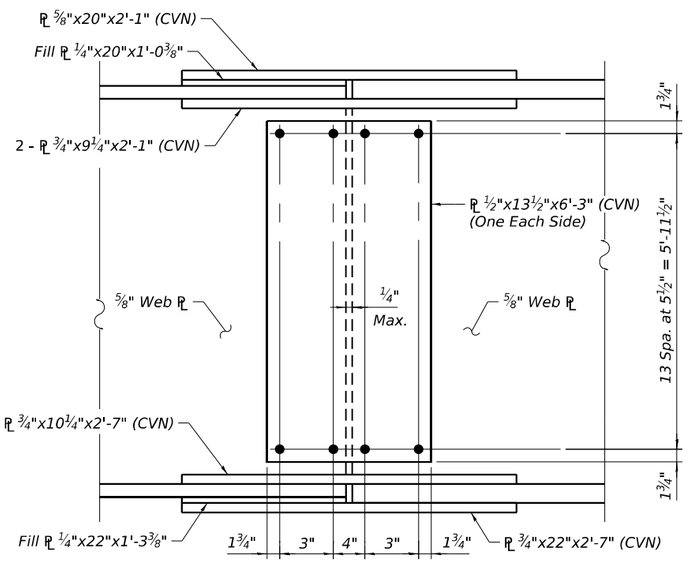


## ELEVATION

Field Splice FS1 WB
Field Splice FS2 WB similar but opposite hand
(No. Required: 20)

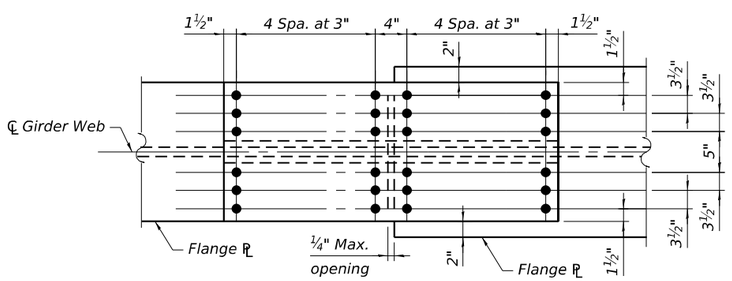


## BOTTOM FLANGE

Field Splice FS1 WB
Field Splice FS2 WB similar but opposite hand

## NOTES:

1. Fasteners shall be ASTM F3125 Grade A325 Type 3 weathering steel bolts in unpainted areas. Bolts ⅞" ∅, holes 15/16" ∅.
2. Load carrying components designated (CVN) denotes Charpy V-Notch Impact Energy Requirements, Zone 2.
3. Class B contact surface, for slip resistance, shall be provided for all connections.
4. All structural steel shall be AASHTO M270 Grade 50W.

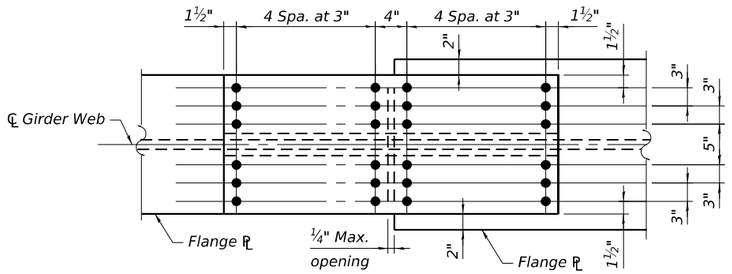


## TOP FLANGE
Field Splice FS1 EB

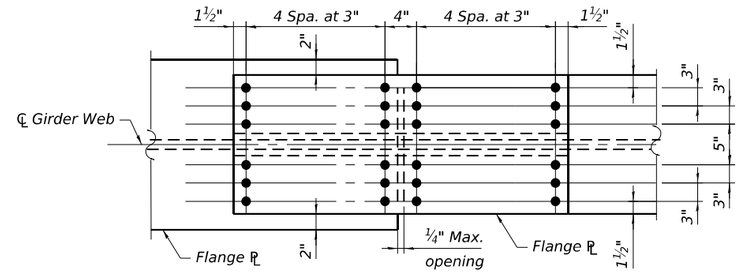


## TOP FLANGE
Field Splice FS2 EB

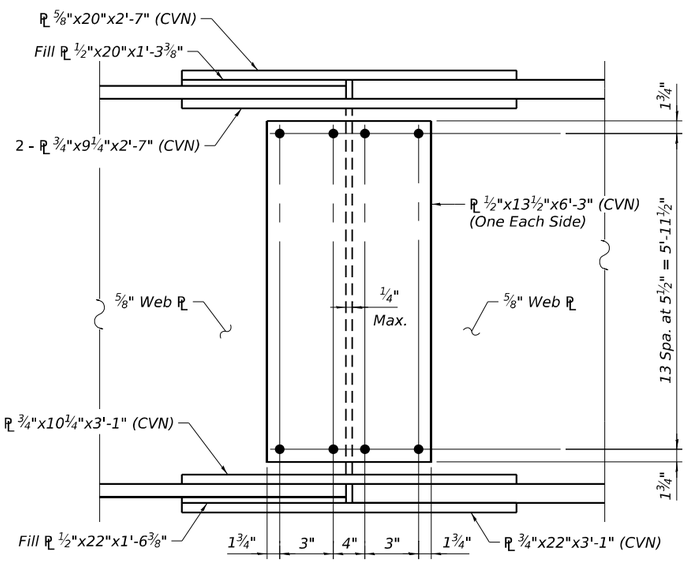


## ELEVATION
Field Splice FS1 EB
(No. Required: 8)

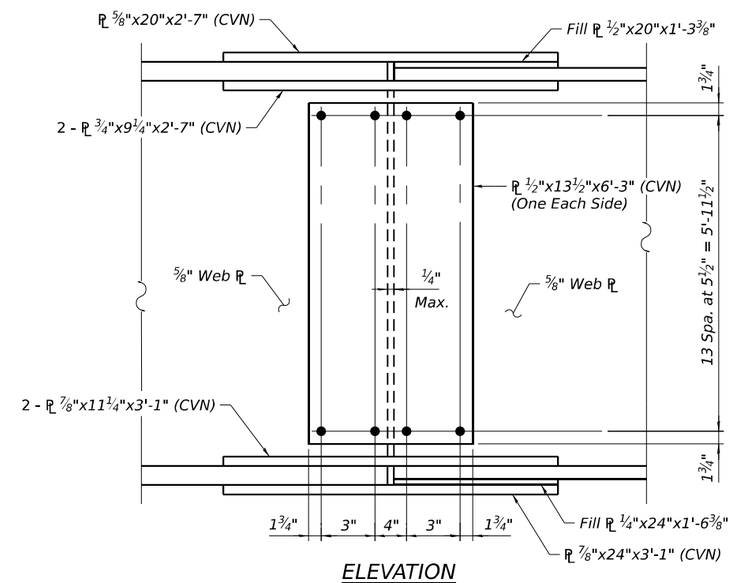


## ELEVATION
Field Splice FS2 EB
(No. Required: 8)

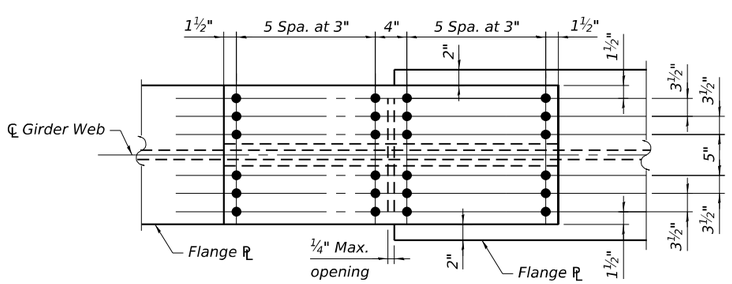


## BOTTOM FLANGE
Field Splice FS1 EB

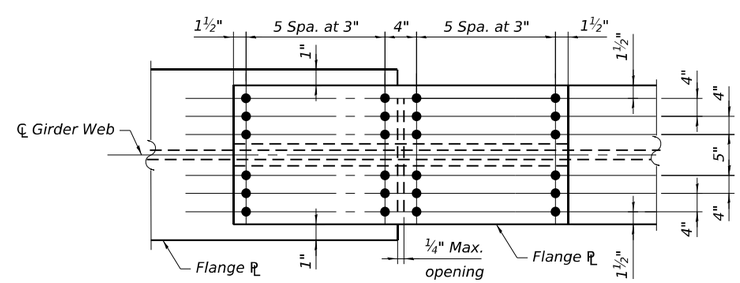


## BOTTOM FLANGE
Field Splice FS2 EB

## NOTES:

1. Fasteners shall be ASTM F3125 Grade A325 Type 3 weathering steel bolts in unpainted areas. Bolts ⅞" ∅, holes 15/16" ∅.
2. Load carrying components designated (CVN) denotes Charpy V-Notch Impact Energy Requirements, Zone 2.
3. Class B contact surface, for slip resistance, shall be provided for all connections.
4. All structural steel shall be AASHTO M270 Grade 50W.

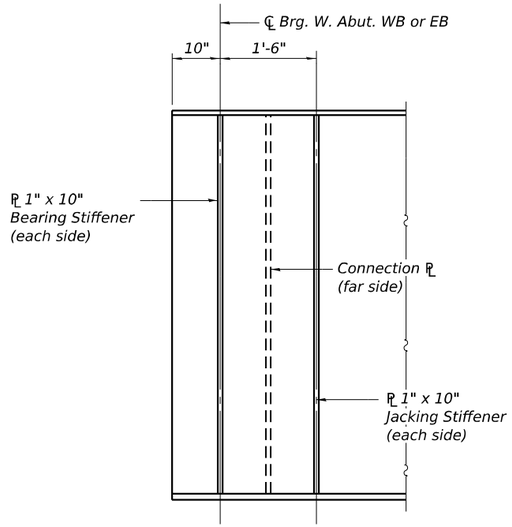


## TYPICAL GIRDER END - W. ABUT. WB & EB

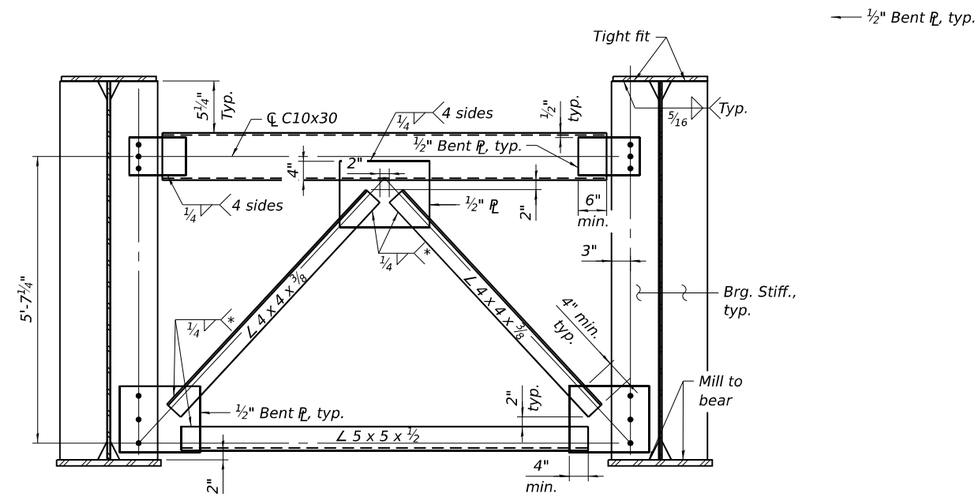


* Weld angles along 3 sides on one face of gusset plate.

## END CROSS-FRAME WB & EB

At West Abutment
(No. Required WB = 9)
(No. Required EB = 7)

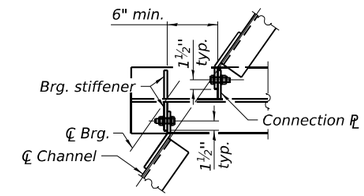


## DETAIL E

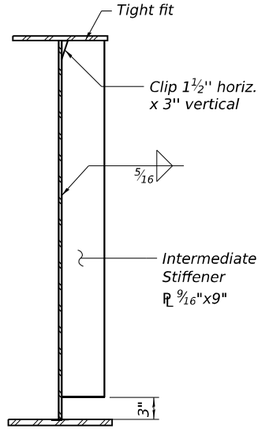


## INTERMEDIATE STIFFENER

Near West Abutment
(No. Plates Required WB = 10)
(No. Plates Required EB = 8)

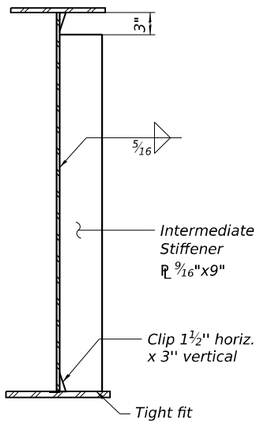


## INTERMEDIATE STIFFENER

Near Pier 1
(No. Plates Required WB = 7)
(No. Plates Required EB = 20)

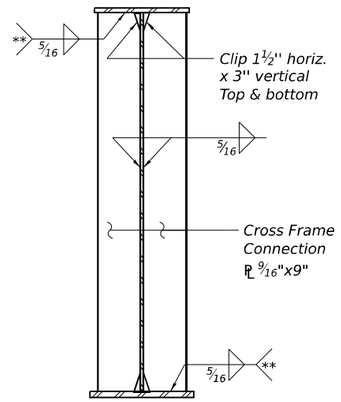


## CONNECTION PLATE

(No. Plates Required WB = 270)
(No. Plates Required EB = 220)

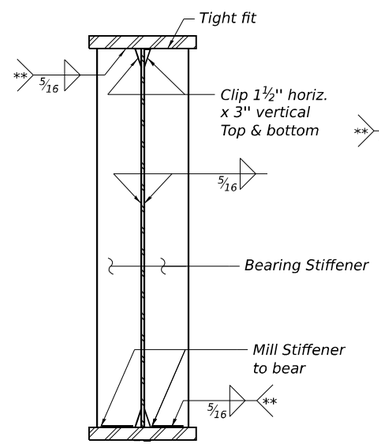


## BEARING & JACKING STIFFENER

At West Abutment
(No. Plates Required WB= 40)
(No. Plates Required EB= 32)
At Pier 1
(No. Plates Required WB= 60)
(No. Plates Required EB= 48)

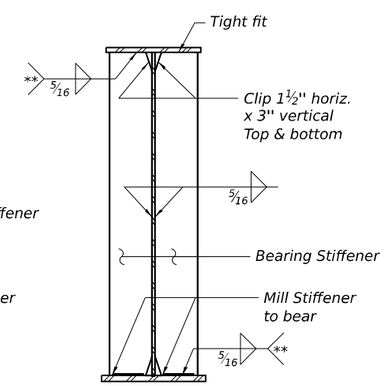


## BEARING & JACKING STIFFENER

At Pier 2
(No. Plates Required WB= 40)
(No. Plates Required EB= 32)

** Stop welds ¼" (±⅛") as shown on sheet S-55. Typical.

## NOTES:

1. For location of cross frames, see sheet S-58 and S-59.
2. Bearing and jacking stiffeners to be vertical under full dead load, unless noted otherwise.
3. For end cross frames, Detail 15/16" ∅ holes for all ¾" ∅ bolts.
4. Two hardened washers required for each set of oversized hole.
5. Place cross frame with channel flanges outward from abutment backwall.
6. Class B contact surface, for slip resistance, shall be provided for all crossframes.
7. All cross frames between girders shall be installed with erection pins and bolts in accordance with the erection plan approved by the Engineer. Individual cross frames at supports may be temporarily disconnected to install bearing anchor bolts.
8. All structural steel shall be AASHTO M270 Grade 50W.

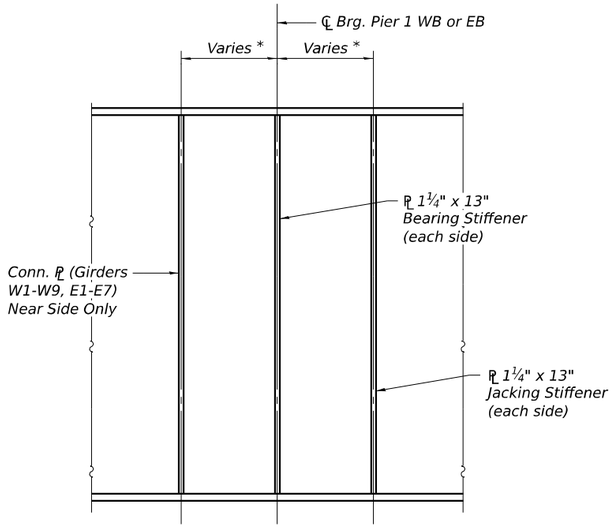


## DETAIL B

* Jacking stiffeners and cross frame connection plates near Pier 1 shall be located to match interior cross frames. See framing plan sheets for locations of cross frames.

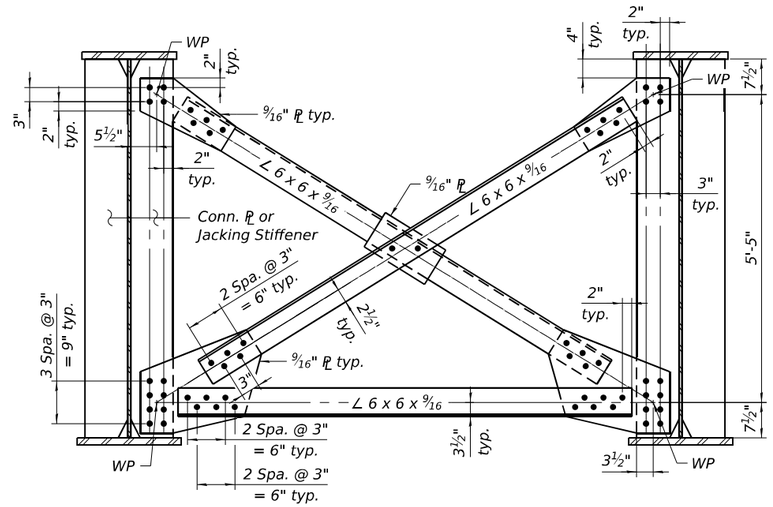


## INTERIOR CROSS-FRAME

(No Required WB = 132)
(No Required EB = 110)

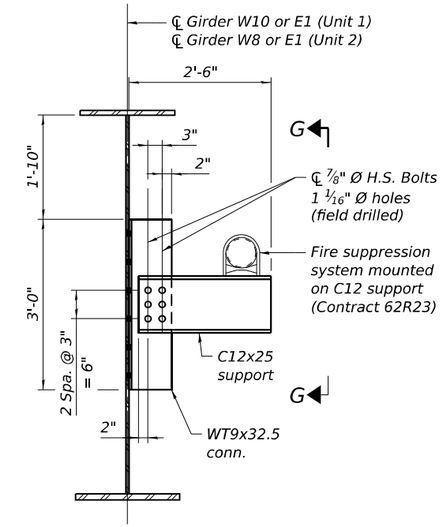


## SUPPORT CONNECTION FOR FIRE SUPPRESSION SYSTEM

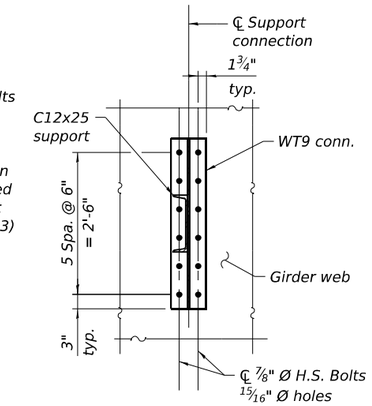


## VIEW G-G

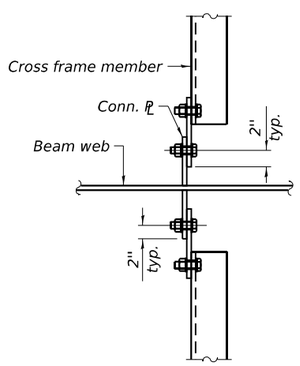


## DETAIL G

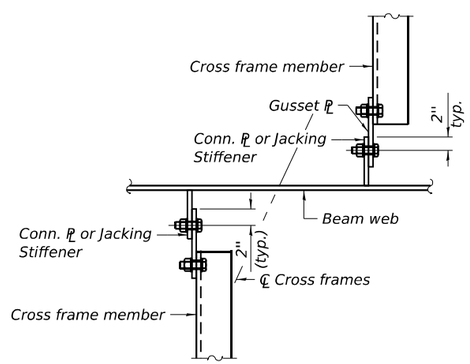


## DETAIL F

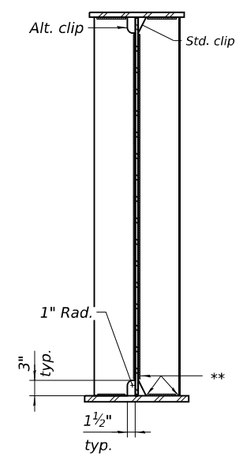


## WELD LIMITS AND CLIP DETAILS

** Stop welds ¼" (±⅛") from edges as shown. Typical.

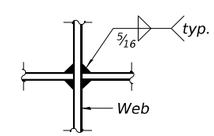


## WEB WELD DETAIL

## NOTES:

1. For location of cross frames, see sheet S-58 and S-59.
2. All interior cross frame connections shall be ASTM F3125, Grade A325 Type 3, ⅞" ∅ bolts in 1 1/16" ∅ holes, unless noted otherwise.
3. Two hardened washers required for each set of oversized hole.
4. Class B contact surface, for slip resistance, shall be provided for all crossframes.
5. All cross frames between girders shall be installed with erection pins and bolts in accordance with the erection plan approved by the Engineer. Individual cross frames at supports may be temporarily disconnected to install bearing anchor bolts.
6. All structural steel shall be AASHTO M270 Grade 50W.

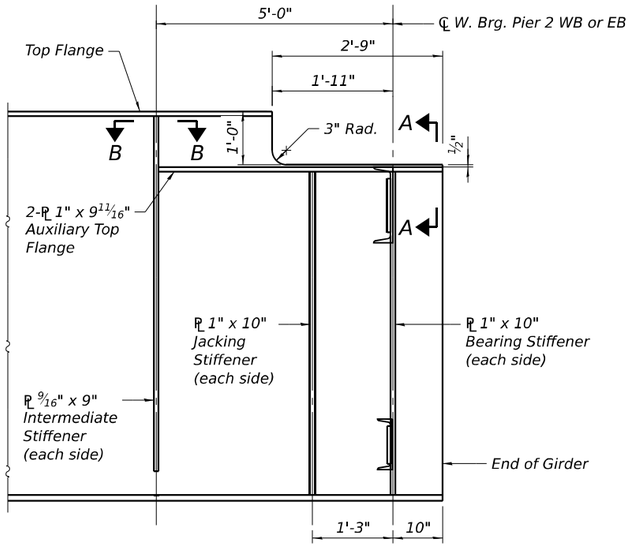


TYPICAL GIRDER END AT PIER 2 WB & EB

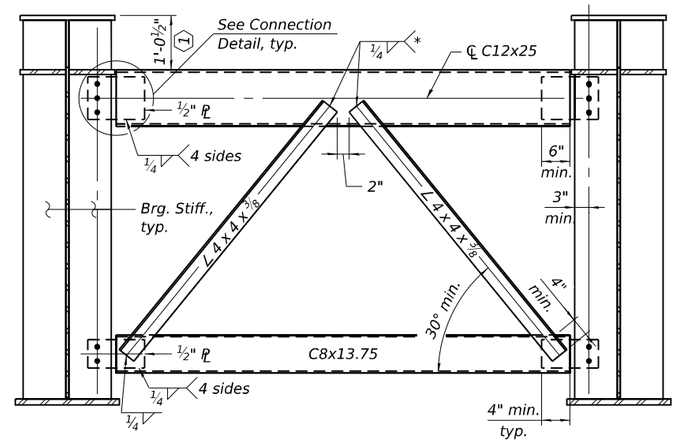


* Weld angles along 3 sides on one face of the channel.

(1) Constant across structure.

END CROSS-FRAME

At Pier 2
(No. Required WB = 9)
(No. Required EB = 7)

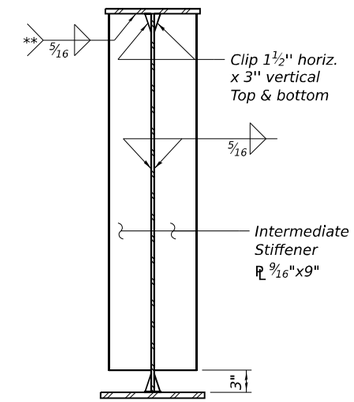


** Stop welds ¼" (±⅛") as shown on sheet S-55. Typical.

INTERMEDIATE STIFFENER

Near Pier 2
(No. Plates Required WB = 20)
(No. Plates Required EB = 16)

## NOTES:

1. For location of cross frames, see sheet S-58 and S-59.
2. Bearing and jacking stiffeners to be vertical under full dead load, unless noted otherwise.
3. For end cross frames, Detail 15/16" ∅ holes for all ¾" ∅ bolts.
4. Two hardened washers required for each set of oversized hole.
5. Place cross frame with channel flanges outward from joint.
6. Place bolts to maintain minimum 1½" clearance between channels and edge of ½" mounting plates.
7. Class B contact surface, for slip resistance, shall be provided for all crossframes.
8. All cross frames between girders shall be installed with erection pins and bolts in accordance with the erection plan approved by the Engineer. Individual cross frames at supports may be temporarily disconnected to install bearing anchor bolts.
9. All structural steel shall be AASHTO M270 Grade 50W.

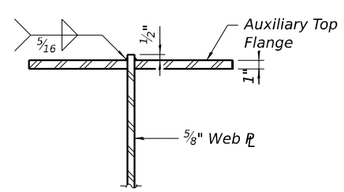


SECTION A-A

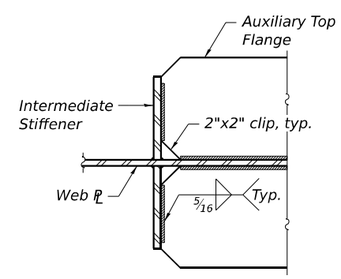


SECTION B-B

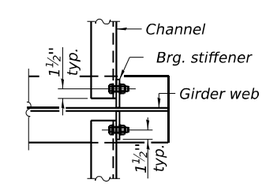


CONNECTION DETAIL

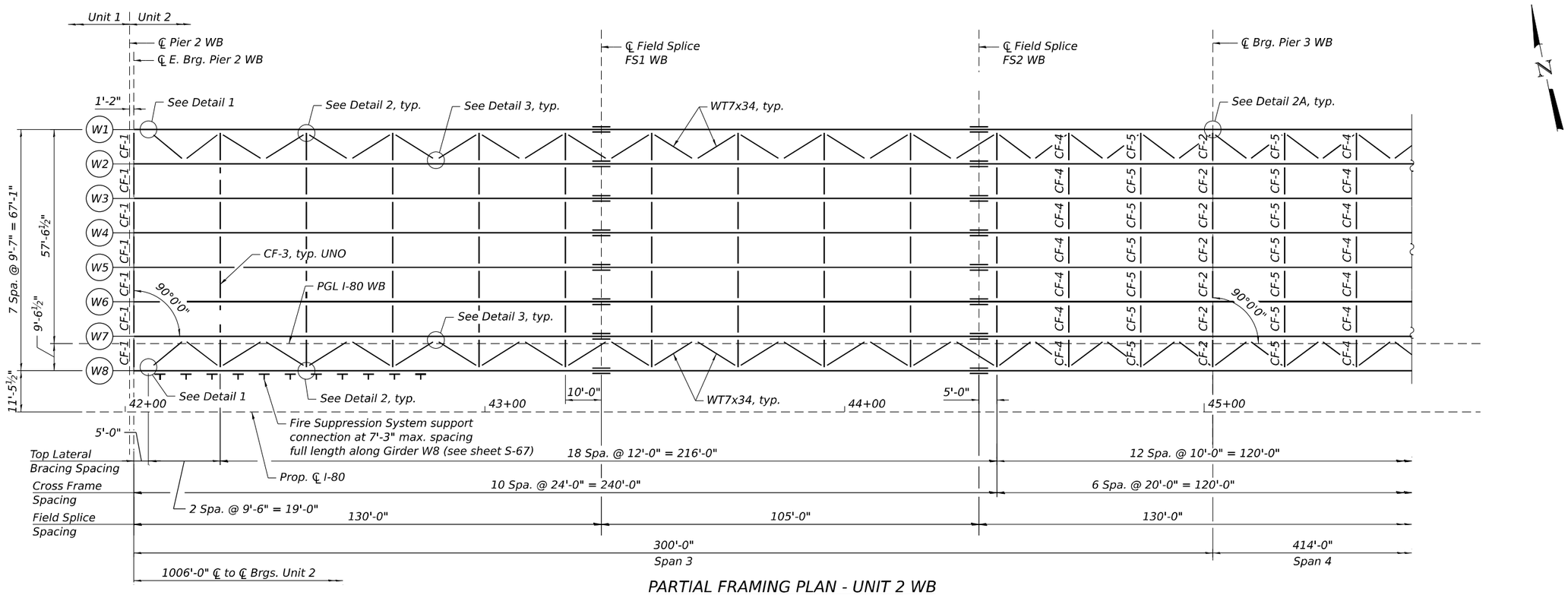


## PARTIAL FRAMING PLAN - UNIT 2 WB

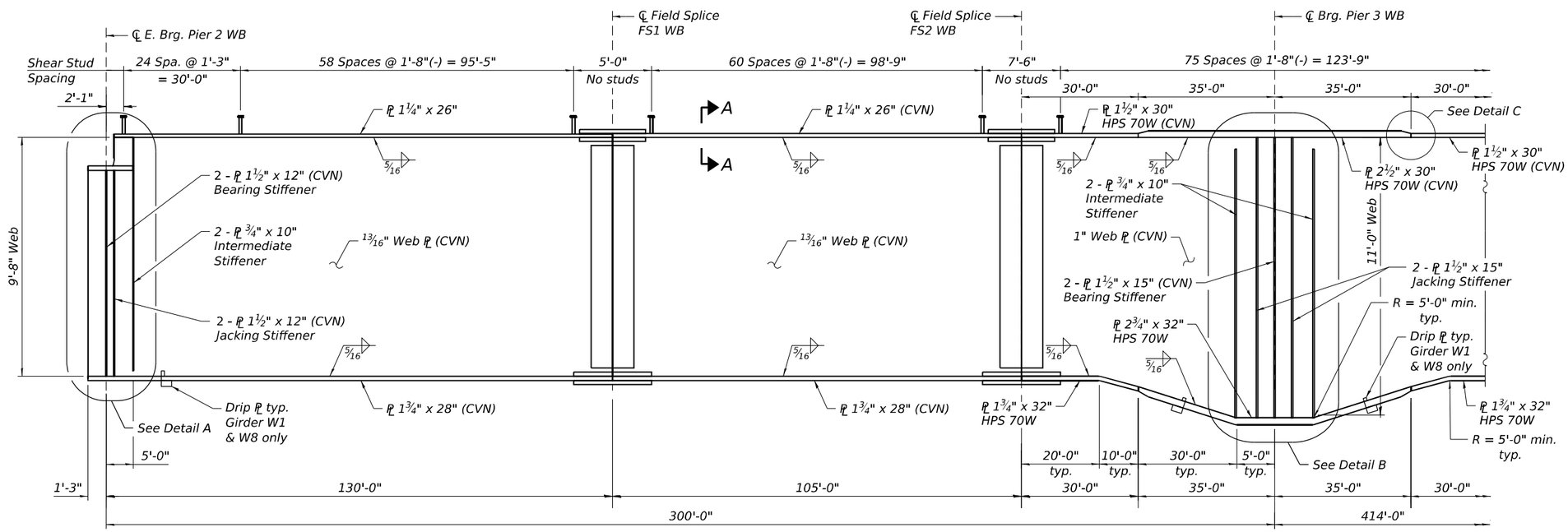


## PARTIAL ELEVATION - UNIT 2 WB

## NOTES:

1. Load carrying components designated "CVN" shall conform to the Charpy-V-Notch Impact Energy Requirement, Zone 2.
2. All cross frames between girders shall be installed with erection pins and bolts in accordance with the erection plan approved by the Engineer. Individual cross frames at supports may be temporarily disconnected to install bearing anchor bolts.
3. All dimensions are horizontal.
4. All steel shall be M270 Grade 50W except as otherwise noted.
5. For Girder Moment and Reaction tables, see sheet S-75.
6. For Camber Diagram, see sheet S-77.
7. For Section A-A, Detail C, and Girder Bolted Field Splice Details, see sheet S-78.
8. For Interior and Pier Cross Frame Details, see sheet S-79.
9. For Detail B, Stiffener Details and drip PL details, see sheet S-80.
10. For Detail A and End Cross Frame Details, see sheet S-81.
11. For lateral bracing details see sheet S-82.
12. For navigation light support, see sheet S-83.


WSP USA Inc.
30 N. LASALLE STREET
SUITE 4200
CHICAGO, IL 60602
TEL: (312) 782-8150
FAX: (312) 782-1684


| | | | |
|---|---|---|---|
| USER NAME = USSJ696614 | DESIGNED - KB | REVISED - | |
| | CHECKED - LAS | REVISED - | |
| PLOT SCALE = 32:0 ':" / in. | DRAWN - BK | REVISED - | |
| PLOT DATE = 12/4/2024 | CHECKED - LAS | REVISED - | |

**STATE OF ILLINOIS**
**DEPARTMENT OF TRANSPORTATION**

**FRAMING PLAN AND ELEVATION 1 - UNIT 2 WB**
**STRUCTURE NUMBER 099-8309 WB AND 099-8325 EB**

SHEET S-69 OF S-87 SHEETS

| F.A.I RTE. | SECTION | COUNTY | TOTAL SHEETS | SHEET NO. |
|---|---|---|---|---|
| I-80 | (99-3DEFP) HF 23 | WILL | 89 | 71 |
| | | CONTRACT NO. 62W52 | | |
| | ILLINOIS | FED. AID PROJECT | | |


MODEL: Default
FILE NAME: pw://transystems-pw.bentley.com:transyscorp-pw1-hosted/Documents/Projects_2018/CH401/401180022/03-WSP/CAD/62W52-SF-3/Sheets/0998309-62W52-S069-BM201.dgn

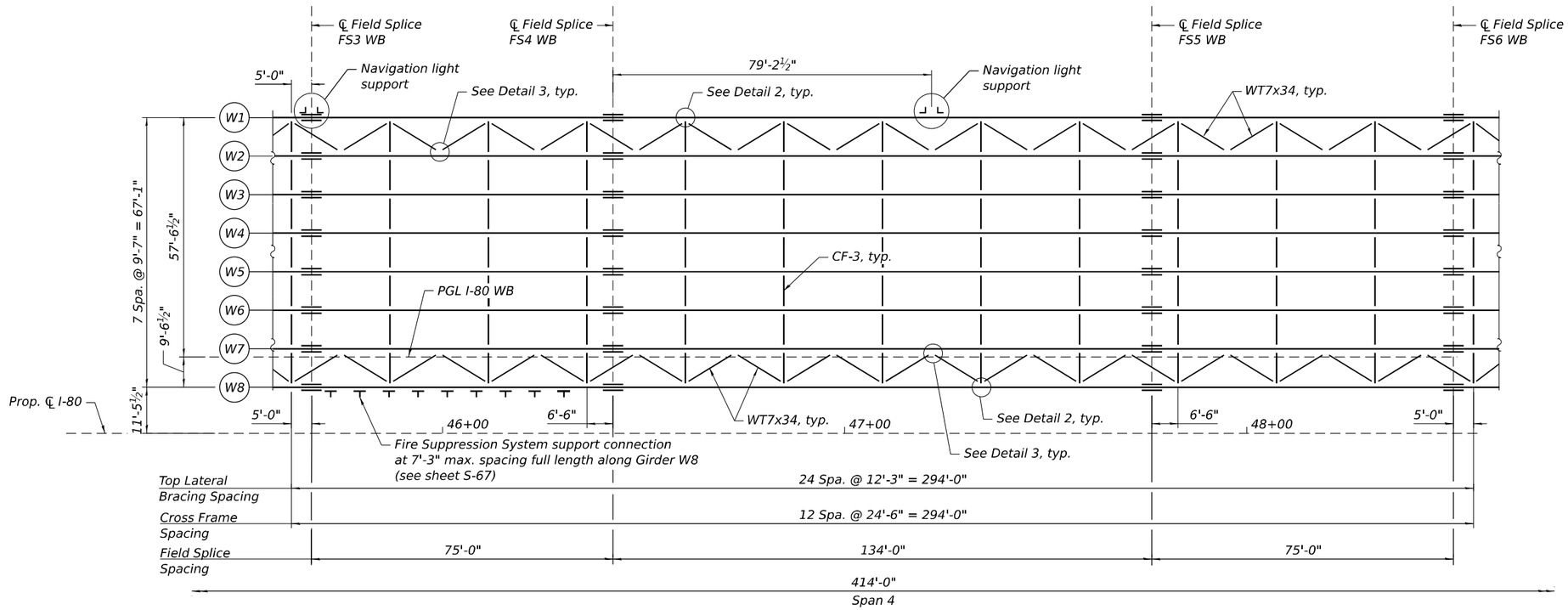


## PARTIAL FRAMING PLAN - UNIT 2 WB

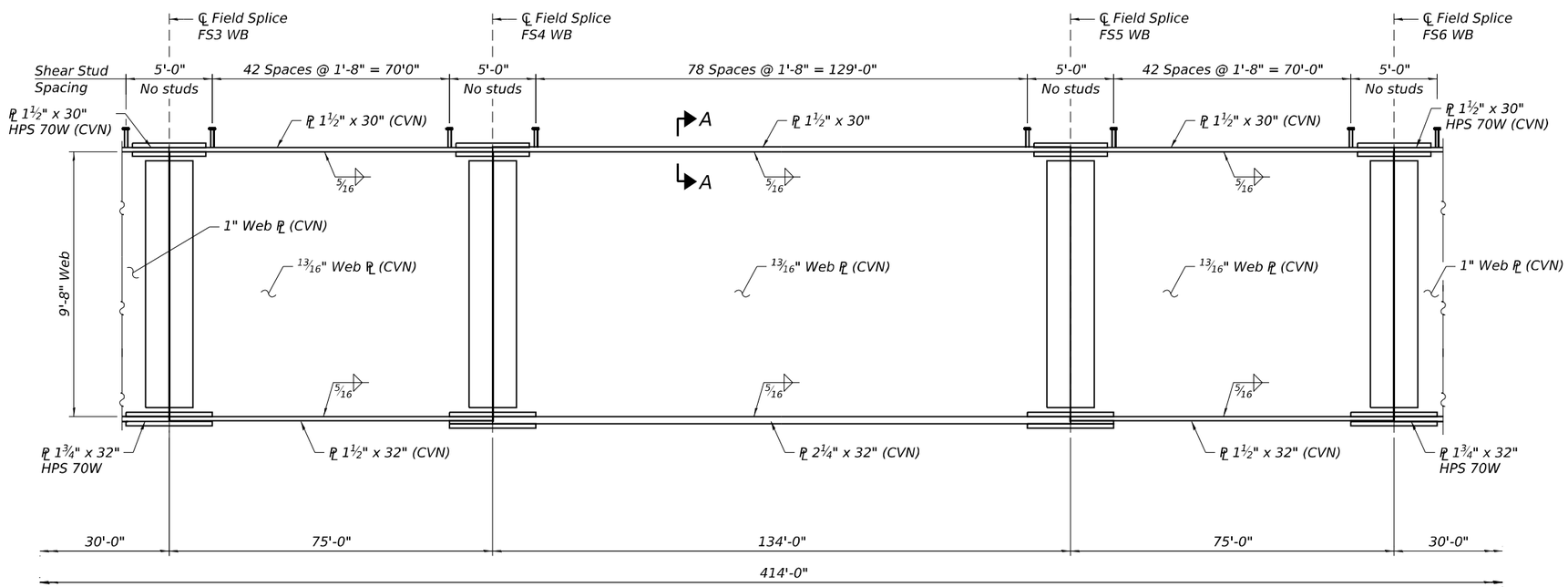


## PARTIAL ELEVATION - UNIT 2 WB

## NOTES:

1. Load carrying components designated "CVN" shall conform to the Charpy-V-Notch Impact Energy Requirement, Zone 2.
2. All cross frames between girders shall be installed with erection pins and bolts in accordance with the erection plan approved by the Engineer. Individual cross frames at supports may be temporarily disconnected to install bearing anchor bolts.
3. All dimensions are horizontal.
4. All steel shall be M270 Grade 50W except as otherwise noted.
5. For Girder Moment and Reaction tables, see sheet S-75.
6. For Camber Diagram, see sheet S-77.
7. For Section A-A, Detail C, and Girder Bolted Field Splice Details, see sheet S-78.
8. For Interior and Pier Cross Frame Details, see sheet S-79.
9. For Stiffener Details, see sheet S-80.
10. For lateral bracing details see sheet S-82.
11. For navigation light support, see sheet S-83.


WSP USA Inc.
30 N. LASALLE STREET
SUITE 4200
CHICAGO, IL 60602
TEL: (312) 782-8150
FAX: (312) 782-1684


| | | | |
|---|---|---|---|
| USER NAME = USSJ696614 | DESIGNED - KB | REVISED - | |
| | CHECKED - LAS | REVISED - | |
| PLOT SCALE = 32:0 ':" / in. | DRAWN - BK | REVISED - | |
| PLOT DATE = 12/4/2024 | CHECKED - LAS | REVISED - | |

**STATE OF ILLINOIS**
**DEPARTMENT OF TRANSPORTATION**

**FRAMING PLAN AND ELEVATION 2 - UNIT 2 WB**
**STRUCTURE NUMBER 099-8309 WB AND 099-8325 EB**

SHEET S-70 OF S-87 SHEETS

| F.A.I RTE. | SECTION | COUNTY | TOTAL SHEETS | SHEET NO. |
|---|---|---|---|---|
| I-80 | (99-3DEFP) HF 23 | WILL | 89 | 72 |
| | | CONTRACT NO. 62W52 | | |
| | ILLINOIS | FED. AID PROJECT | | |


MODEL: Default
FILE NAME: pw://transystems-pw.bentley.com:transyscorp-pw1-hosted/Documents/Projects_2018/CH401/401180022/03-WSP/CAD/62W52-SF-3/Sheets/0998309-62W52-S070-BM202.dgn

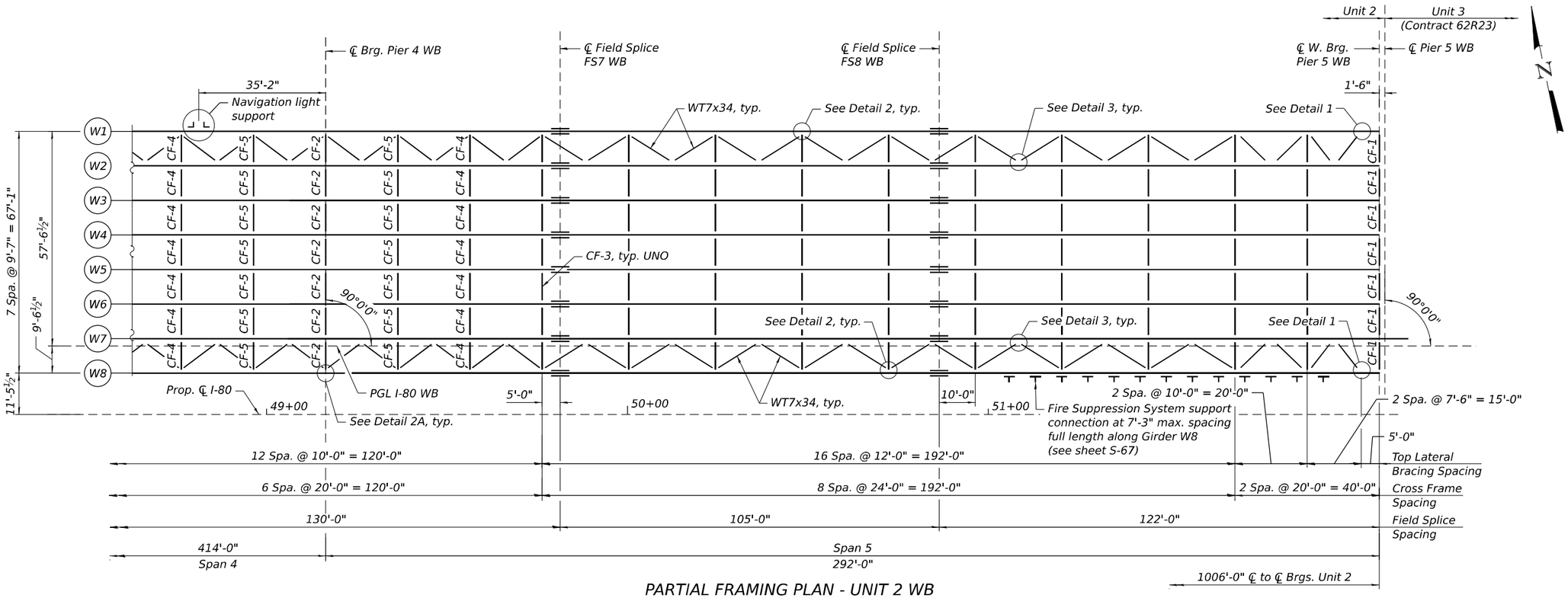


## PARTIAL FRAMING PLAN - UNIT 2 WB

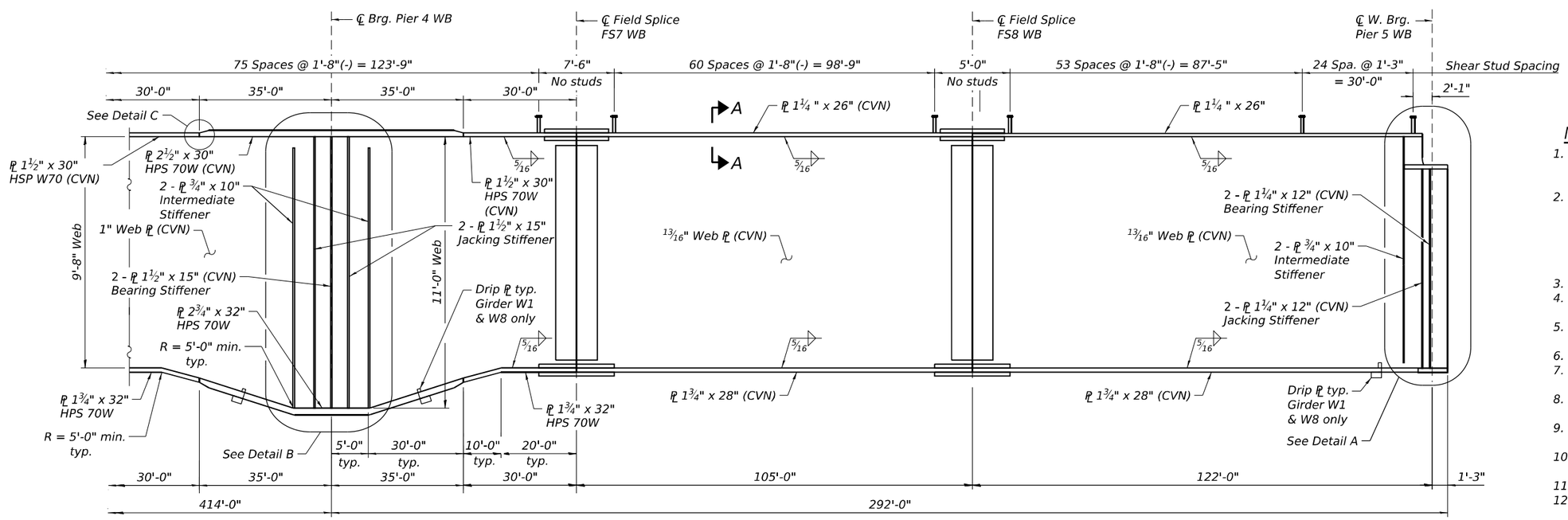


## PARTIAL ELEVATION - UNIT 2 WB

## NOTES:

1. Load carrying components designated "CVN" shall conform to the Charpy-V-Notch Impact Energy Requirement, Zone 2.
2. All cross frames between girders shall be installed with erection pins and bolts in accordance with the erection plan approved by the Engineer. Individual cross frames at supports may be temporarily disconnected to install bearing anchor bolts.
3. All dimensions are horizontal.
4. All steel shall be M270 Grade 50W except as otherwise noted.
5. For Girder Moment and Reaction tables, see sheet S-75.
6. For Camber Diagram, see sheet S-77.
7. For Section A-A, Detail C, and Girder Bolted Field Splice Details, see sheet S-78.
8. For Interior and Pier Cross Frame Details, see sheet S-79.
9. For Detail B, Stiffener Details and drip PL details, see sheet S-80.
10. For Detail A and End Cross Frame Details, see sheet S-81.
11. For lateral bracing details see sheet S-82.
12. For navigation light support, see sheet S-83.


WSP USA Inc.
30 N. LASALLE STREET
SUITE 4200
CHICAGO, IL 60602
TEL: (312) 782-8150
FAX: (312) 782-1684


| | | |
|---|---|---|
| USER NAME = USSJ696614 | DESIGNED - KB | REVISED - |
| | CHECKED - LAS | REVISED - |
| PLOT SCALE = 32:0 ':' / in. | DRAWN - BK | REVISED - |
| PLOT DATE = 12/4/2024 | CHECKED - LAS | REVISED - |

**STATE OF ILLINOIS**
**DEPARTMENT OF TRANSPORTATION**

**FRAMING PLAN AND ELEVATION 3 - UNIT 2 WB**
**STRUCTURE NUMBER 099-8309 WB AND 099-8325 EB**

SHEET S-71 OF S-87 SHEETS

| F.A.I RTE. | SECTION | COUNTY | TOTAL SHEETS | SHEET NO. |
|---|---|---|---|---|
| I-80 | (99-3DEFP) HF 23 | WILL | 89 | 73 |
| | | CONTRACT NO. 62W52 | | |
| | ILLINOIS | FED. AID PROJECT | | |


MODEL: Default
FILE NAME: pw://transystems-pw.bentley.com:transyscorp-pw1-hosted/Documents/Projects_2018/CH401/401180022/03-WSP/CAD/62W52-SF-3/Sheets/0998309-62W52-S071-BM203.dgn

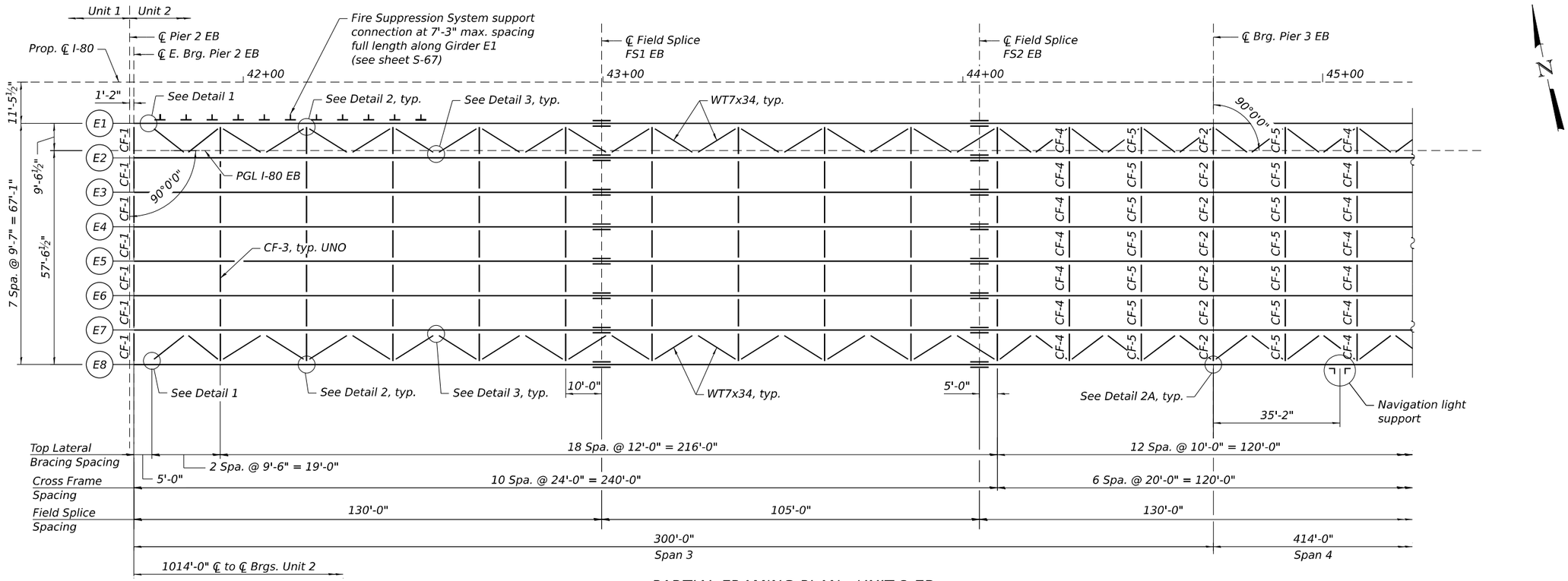


## PARTIAL FRAMING PLAN - UNIT 2 EB

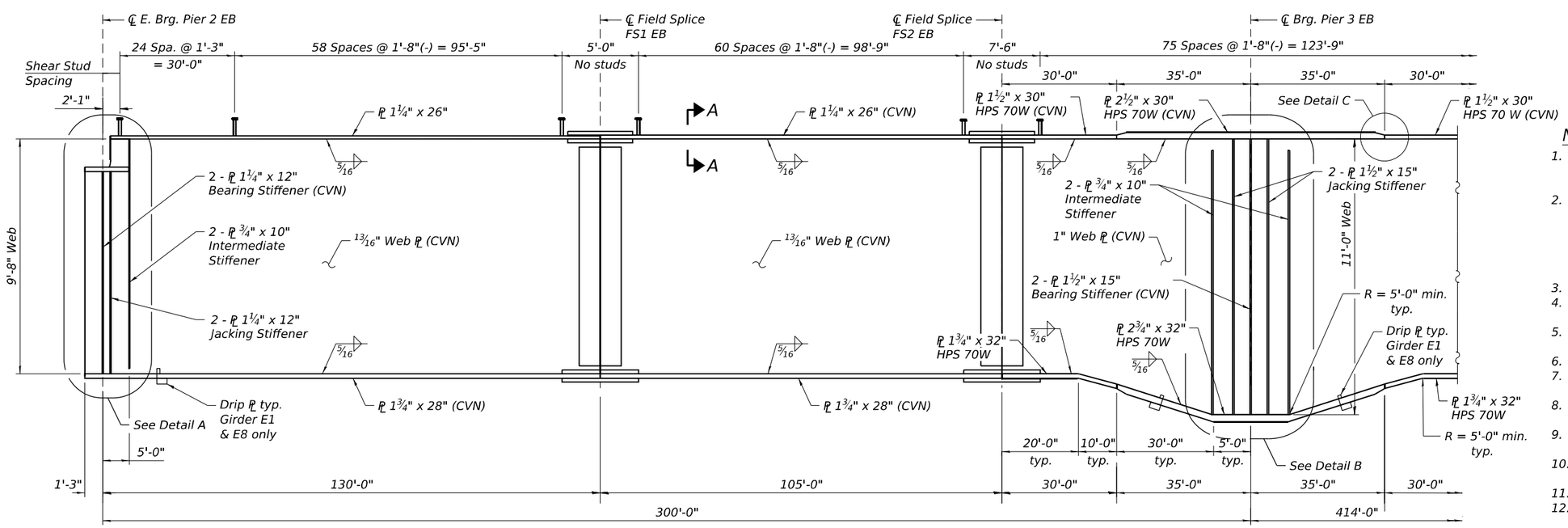


## PARTIAL ELEVATION - UNIT 2 EB

## NOTES:

1. Load carrying components designated "CVN" shall conform to the Charpy-V-Notch Impact Energy Requirement, Zone 2.
2. All cross frames between girders shall be installed with erection pins and bolts in accordance with the erection plan approved by the Engineer. Individual cross frames at supports may be temporarily disconnected to install bearing anchor bolts.
3. All dimensions are horizontal.
4. All steel shall be M270 Grade 50W except as otherwise noted.
5. For Girder Moment and Reaction tables, see sheet S-76.
6. For Camber Diagram, see sheet S-77.
7. For Section A-A, Detail C, and Girder Bolted Field Splice Details, see sheet S-78.
8. For Interior and Pier Cross Frame Details, see sheet S-79.
9. For Detail B, Stiffener Details and drip PL details, see sheet S-80.
10. For Detail A and End Cross Frame Details, see sheet S-81.
11. For lateral bracing details see sheet S-82.
12. For navigation light support see sheet S-83.


WSP USA Inc.
30 N. LASALLE STREET
SUITE 4200
CHICAGO, IL 60602
TEL: (312) 782-8150
FAX: (312) 782-1684


| | | | |
|---|---|---|---|
| USER NAME = USSJ696614 | DESIGNED - KB | REVISED - | |
| | CHECKED - LAS | REVISED - | |
| PLOT SCALE = 32:0 ':" / in. | DRAWN - BK | REVISED - | |
| PLOT DATE = 12/4/2024 | CHECKED - LAS | REVISED - | |

**STATE OF ILLINOIS**
**DEPARTMENT OF TRANSPORTATION**

**FRAMING PLAN AND ELEVATION 1 - UNIT 2 EB**
**STRUCTURE NUMBER 099-8309 WB AND 099-8325 EB**

SHEET S-72 OF S-87 SHEETS

| F.A.I RTE. | SECTION | COUNTY | TOTAL SHEETS | SHEET NO. |
|---|---|---|---|---|
| I-80 | (99-3DEFP) HF 23 | WILL | 89 | 74 |
| | | CONTRACT NO. 62W52 | | |
| | ILLINOIS | FED. AID PROJECT | | |


MODEL: Default
FILE NAME: pw://transystems-pw.bentley.com:transyscorp-pw1-hosted/Documents/Projects_2018/CH401/401180022/03-WSP/CAD/62W52-SF-3/Sheets/0998309-62W52-S072-BM204.dgn

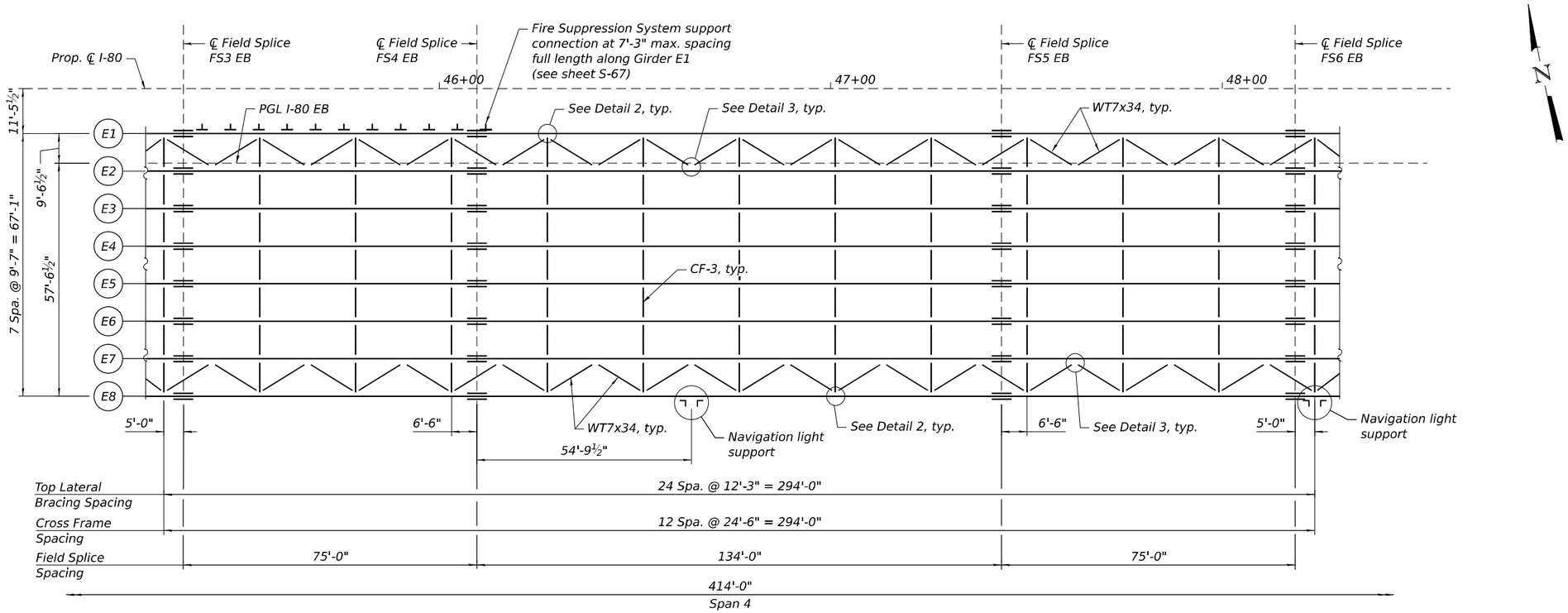


## PARTIAL FRAMING PLAN - UNIT 2 EB

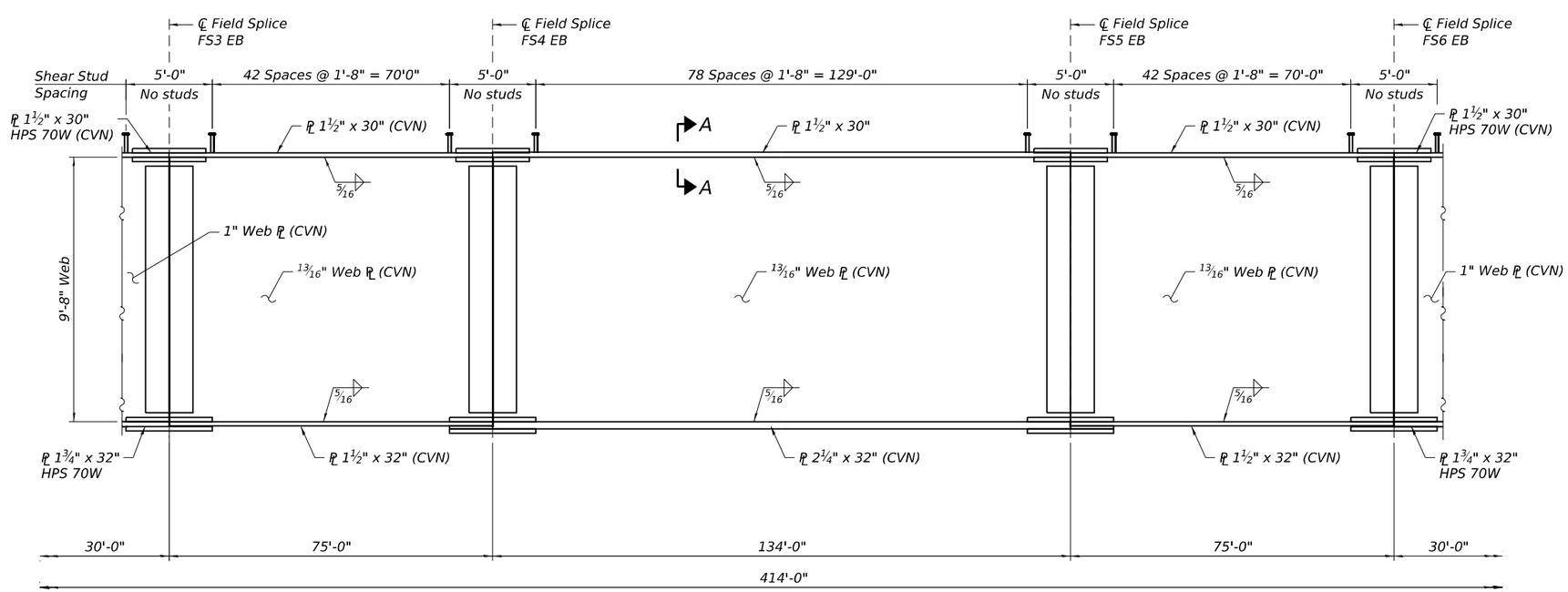


## PARTIAL ELEVATION - UNIT 2 EB

## NOTES:

1. Load carrying components designated "CVN" shall conform to the Charpy-V-Notch Impact Energy Requirement, Zone 2.
2. All cross frames between girders shall be installed with erection pins and bolts in accordance with the erection plan approved by the Engineer. Individual cross frames at supports may be temporarily disconnected to install bearing anchor bolts.
3. All dimensions are horizontal.
4. All steel shall be M270 Grade 50W except as otherwise noted.
5. For Girder Moment and Reaction tables, see sheet S-76.
6. For Camber Diagram, see sheet S-77.
7. For Section A-A, Detail C, and Girder Bolted Field Splice Details, see sheet S-78.
8. For Interior and Pier Cross Frame Details, see sheet S-79.
9. For Stiffener Details, see sheet S-80.
10. For lateral bracing details see sheet S-82.
11. For navigation light support see sheet S-83.


WSP USA Inc.
30 N. LASALLE STREET
SUITE 4200
CHICAGO, IL 60602
TEL: (312) 782-8150
FAX: (312) 782-1684


| | | | |
|---|---|---|---|
| USER NAME = USSJ696614 | DESIGNED - KB | REVISED - | |
| | CHECKED - LAS | REVISED - | |
| PLOT SCALE = 32:0 ':" / in. | DRAWN - BK | REVISED - | |
| PLOT DATE = 12/4/2024 | CHECKED - LAS | REVISED - | |

**STATE OF ILLINOIS**
**DEPARTMENT OF TRANSPORTATION**

**FRAMING PLAN AND ELEVATION 2 - UNIT 2 EB**
**STRUCTURE NUMBER 099-8309 WB AND 099-8325 EB**

SHEET S-73 OF S-87 SHEETS

| F.A.I RTE. | SECTION | COUNTY | TOTAL SHEETS | SHEET NO. |
|---|---|---|---|---|
| I-80 | (99-3DEFP) HF 23 | WILL | 89 | 75 |
| | | CONTRACT NO. 62W52 | | |
| | | ILLINOIS | FED. AID PROJECT | |


MODEL: Default
FILE NAME: pw://transystems-pw.bentley.com:transyscorp-pw1-hosted/Documents/Projects_2018/CH401/401180022/03-WSP/CAD/62W52-SF-3/Sheets/0998309-62W52-S073-BM205.dgn

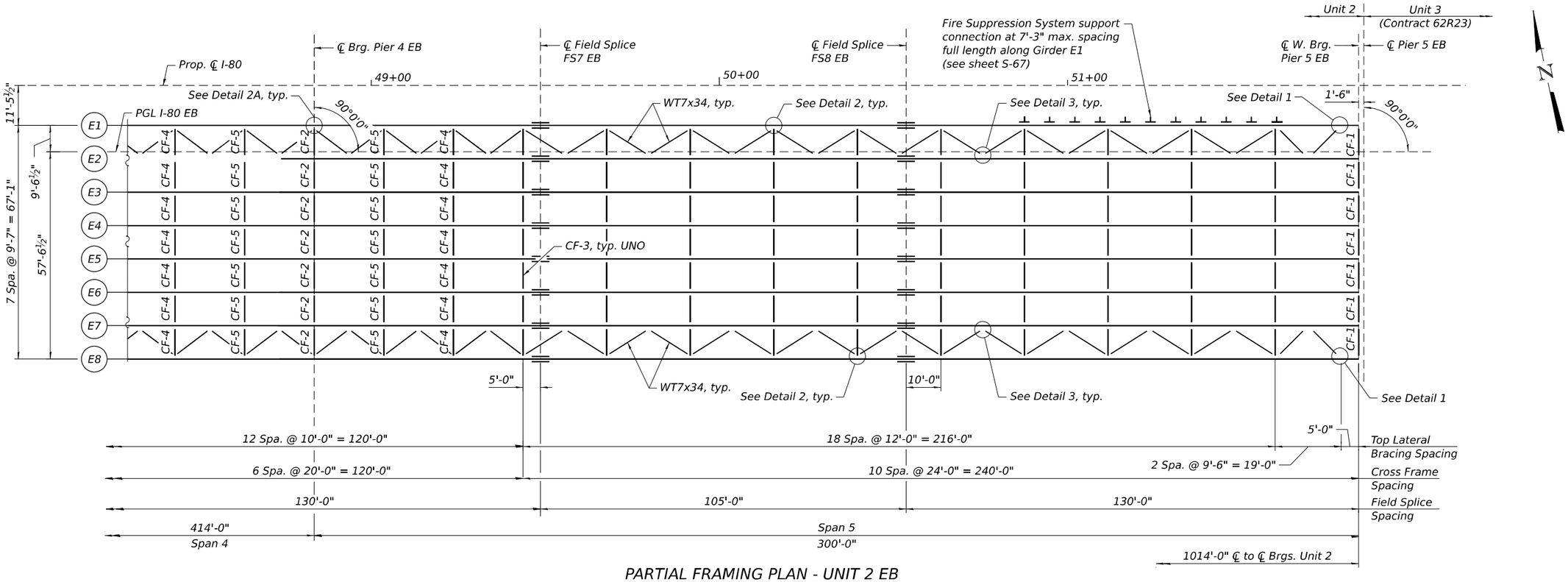


## PARTIAL FRAMING PLAN - UNIT 2 EB

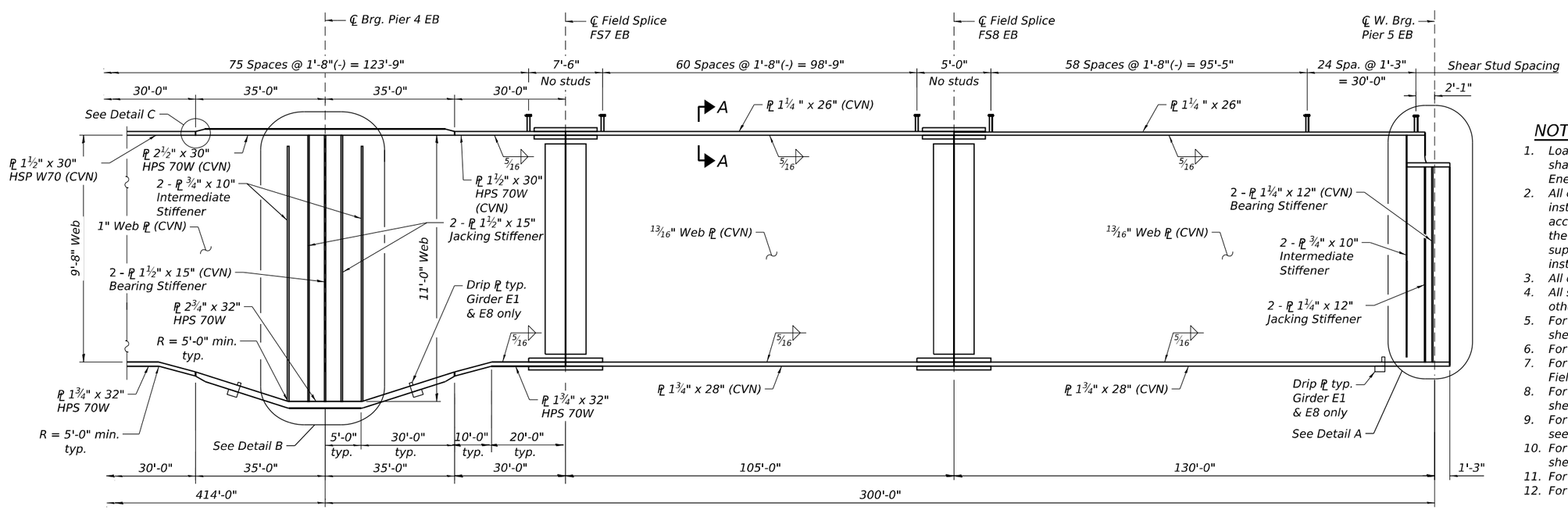


## PARTIAL ELEVATION - UNIT 2 EB

## NOTES:

1. Load carrying components designated "CVN" shall conform to the Charpy-V-Notch Impact Energy Requirement, Zone 2.
2. All cross frames between girders shall be installed with erection pins and bolts in accordance with the erection plan approved by the Engineer. Individual cross frames at supports may be temporarily disconnected to install bearing anchor bolts.
3. All dimensions are horizontal.
4. All steel shall be M270 Grade 50W except as otherwise noted.
5. For Girder Moment and Reaction tables, see sheet S-76.
6. For Camber Diagram, see sheet S-77.
7. For Section A-A, Detail C, and Girder Bolted Field Splice Details, see sheet S-78.
8. For Interior & Pier Cross Frame Details, see sheet S-79.
9. For Detail B, Stiffener Detailsand drip PL details, see sheet S-80.
10. For Detail A & End Cross Frame Details, see sheet S-81.
11. For lateral bracing details see sheet S-82.
12. For navigation light support see sheet S-83.


WSP USA Inc.
30 N. LASALLE STREET
SUITE 4200
CHICAGO, IL 60602
TEL: (312) 782-8150
FAX: (312) 782-1684


| | | | |
|---|---|---|---|
| USER NAME = USSJ696614 | DESIGNED - KB | REVISED - | |
| | CHECKED - LAS | REVISED - | |
| PLOT SCALE = 32:0 ':" / in. | DRAWN - BK | REVISED - | |
| PLOT DATE = 12/4/2024 | CHECKED - LAS | REVISED - | |

**STATE OF ILLINOIS**
**DEPARTMENT OF TRANSPORTATION**

**FRAMING PLAN AND ELEVATION 3 - UNIT 2 EB**
**STRUCTURE NUMBER 099-8309 WB AND 099-8325 EB**

SHEET S-74 OF S-87 SHEETS

| F.A.I RTE. | SECTION | COUNTY | TOTAL SHEETS | SHEET NO. |
|---|---|---|---|---|
| I-80 | (99-3DEFP) HF 23 | WILL | 89 | 76 |
| | | CONTRACT NO. 62W52 | | |
| | ILLINOIS | FED. AID PROJECT | | |

MODEL: Default
FILE NAME: pw://transystems-pw.bentley.com:transyscorp-pw1-hosted/Documents/Projects_2018/CH401/401180022/03-WSP/CAD/62W52-SF-3/Sheets/0998309-62W52-S074-BM206.dgn

| INTERIOR GIRDER MOMENT TABLE | | | | |
|---|---|---|---|---|
| | | 0.4 Sp. 3 or 0.6 Sp. 5 | Pier 3 or Pier 4 | 0.5 Sp. 4 |
| $I_s$ | (in⁴) | 381,789 | 927,761 | 500,420 |
| $I_c$ (n) | (in⁴) | 711,669 | -- | 877,851 |
| $I_c$ (3n) | (in⁴) | 531,054 | -- | 664,814 |
| $I_c$ (cr) | (in⁴) | -- | 984,195 | -- |
| $S_s$ | (in³) | 7,047 | 12,976 | 9,511 |
| $S_c$ (n) | (in³) | 8,743 | -- | 11,300 |
| $S_c$ (3n) | (in³) | 7,986 | -- | 10,463 |
| $S_c$ (cr) | (in³) | -- | 14,263 | -- |
| DC1 | (k/') | 1.77 | 2.31 | 1.94 |
| $M_{DC1}$ | ('k) | 8,282 | 26,462 | 13,246 |
| DC2 | (k/') | 0.16 | 0.16 | 0.16 |
| $M_{DC2}$ | ('k) | 733 | 2,101 | 1,016 |
| DW | (k/') | 0.45 | 0.45 | 0.45 |
| $M_{DW}$ | ('k) | 2,296 | 6,476 | 3,292 |
| LLDF | | * | * | * |
| $M_{LL+IM}$ | ('k) | 7,259 | 9,676 | 8,457 |
| ** $M_u$ (Strength I) | ('k) | 28,787 | 65,468 | 39,444 |
| $\Phi_f M_n$ | ('k) | 38,599 | -- | 45,162 |
| $f_s$ DC1 | (ksi) | 14.1 | 24.5 | 16.7 |
| $f_s$ DC2 | (ksi) | 1.0 | 1.8 | 1.2 |
| $f_s$ DW | (ksi) | 3.5 | 5.5 | 3.8 |
| $f_s$ (LL+IM) | (ksi) | 10.0 | 8.1 | 9.0 |
| $f_s$ (Service II) | (ksi) | 31.6 | 42.3 | 33.4 |
| Service II Resistance | (ksi) | 47.5 | 54.7 | 47.5 |
| ** $f_s$ (Strength I) | (ksi) | - | 58.0 | - |
| $\Phi_f F_n$ | (ksi) | - | 68.4 | - |
| $V_f$ | (k) | 82.1 | 99.5 | 62.8 |

| EXTERIOR GIRDER MOMENT TABLE | | | | |
|---|---|---|---|---|
| | | 0.4 Sp. 3 or 0.6 Sp. 5 | Pier 3 or Pier 4 | 0.5 Sp. 4 |
| $I_s$ | (in⁴) | 381,789 | 927,761 | 500,420 |
| $I_c$ (n) | (in⁴) | 691,824 | -- | 853,640 |
| $I_c$ (3n) | (in⁴) | 519,126 | -- | 651,303 |
| $I_c$ (cr) | (in⁴) | -- | 976,214 | -- |
| $S_s$ | (in³) | 7,047 | 12,976 | 9,511 |
| $S_c$ (n) | (in³) | 8,674 | -- | 11,220 |
| $S_c$ (3n) | (in³) | 7,924 | -- | 10,397 |
| $S_c$ (cr) | (in³) | -- | 14,079 | -- |
| DC1 | (k/') | 1.68 | 2.22 | 1.85 |
| $M_{DC1}$ | ('k) | 8,287 | 26,384 | 13,173 |
| DC2 | (k/') | 0.33 | 0.33 | 0.33 |
| $M_{DC2}$ | ('k) | 722 | 2,561 | 998 |
| DW | (k/') | 0.45 | 0.45 | 0.45 |
| $M_{DW}$ | ('k) | 2,239 | 6,186 | 3,210 |
| LLDF | | * | * | * |
| $M_{LL+IM}$ | ('k) | 8,355 | 11,360 | 9,757 |
| ** $M_u$ (Strength I) | ('k) | 30,703 | 68,607 | 41,584 |
| $\Phi_f M_n$ | ('k) | 36,918 | -- | 43,184 |
| $f_s$ DC1 | (ksi) | 14.1 | 24.4 | 16.6 |
| $f_s$ DC2 | (ksi) | 1.2 | 2.2 | 1.2 |
| $f_s$ DW | (ksi) | 3.4 | 5.3 | 3.7 |
| $f_s$ (LL+IM) | (ksi) | 11.6 | 9.7 | 10.4 |
| $f_s$ (Service II) | (ksi) | 33.8 | 44.5 | 35.0 |
| Service II Resistance | (ksi) | 47.5 | 55.3 | 47.5 |
| ** $f_s$ (Strength I) | (ksi) | - | 61.0 | - |
| $\Phi_f F_n$ | (ksi) | - | 68.4 | - |
| $V_f$ | (k) | 69.0 | 94.5 | 68.7 |

Note: The analysis considers 2 scenarios: stresses resulting from the staged construction sequence and stresses assuming a single deck pour.

| INTERIOR GIRDER REACTION TABLE | | | |
|---|---|---|---|
| | | Pier 2 & Pier 5 | Pier 3 & Pier 4 |
| LLDF | | * | * |
| OCF | | -- | -- |
| $R_{DC1}$ | (k) | 173.7 | 759.3 |
| $R_{DC2}$ | (k) | 11.7 | 52.9 |
| $R_{DW}$ | (k) | 46.6 | 187.3 |
| $R_{LL}$ | (k) | 120.2 | 287.4 |
| $R_{IM}$ | (k) | 19.9 | 35.4 |
| ** $R_{Total}$ (Strength I)(Impact) | (k) | 574.2 | 1,954.2 |
| ** $R_{Total}$ (Strength I)(No Impact) | (k) | 537.6 | 1,889.1 |

| EXTERIOR GIRDER REACTION TABLE | | | |
|---|---|---|---|
| | | Pier 2 & Pier 5 | Pier 3 & Pier 4 |
| LLDF | | * | * |
| OCF | | -- | -- |
| $R_{DC1}$ | (k) | 174.1 | 755.0 |
| $R_{DC2}$ | (k) | 29.7 | 102.9 |
| $R_{DW}$ | (k) | 44.8 | 163.9 |
| $R_{LL}$ | (k) | 128.9 | 296.5 |
| $R_{IM}$ | (k) | 20.5 | 38.0 |
| ** $R_{Total}$ (Strength I)(Impact) | (k) | 612.6 | 1,998.8 |
| ** $R_{Total}$ (Strength I)(No Impact) | (k) | 574.9 | 1,929.0 |

* See LLDF Tables below

** Limit states for moment, stress, and reaction shown include a load modifier factor of 1.05 relating to operational classification for an essential bridge

| EXTERIOR GIRDER LIVE LOAD + IMPACT DISTRIBUTION FACTORS | | | | | | | | | | | |
|---|---|---|---|---|---|---|---|---|---|---|---|
| Span/Support | Positive Moment | | | Negative Moment | | | Shear | | | Reactions | Deflection |
| | 1 Lane | Design | Fatigue | 1 Lane | Design | Fatigue | 1 Lane | Design | Fatigue | Design | Design |
| Pier 2 & 5 | -- | -- | -- | -- | -- | -- | 0.70 | 0.83 | 0.64 | 0.83 | -- |
| Spans 3 & 5 | 0.48 | 0.72 | 0.39 | -- | -- | -- | -- | -- | -- | -- | 0.49 |
| Piers 3 & 4 | -- | -- | -- | 0.51 | 0.77 | 0.41 | 0.71 | 0.91 | 0.70 | 0.91 | -- |
| Span 4 | 0.47 | 0.71 | 0.37 | -- | -- | -- | -- | -- | -- | -- | 0.49 |

| INTERIOR GIRDER LIVE LOAD + IMPACT DISTRIBUTION FACTORS | | | | | | | | | | | |
|---|---|---|---|---|---|---|---|---|---|---|---|
| Span/Support | Positive Moment | | | Negative Moment | | | Shear | | | Reactions | Deflection |
| | 1 Lane | Design | Fatigue | 1 Lane | Design | Fatigue | 1 Lane | Design | Fatigue | Design | Design |
| Pier 2 & 5 | -- | -- | -- | -- | -- | -- | 0.57 | 0.77 | 0.49 | 0.77 | -- |
| Spans 3 & 5 | 0.38 | 0.63 | 0.30 | -- | -- | -- | -- | -- | -- | -- | 0.49 |
| Piers 3 & 4 | -- | -- | -- | 0.41 | 0.66 | 0.34 | 0.53 | 0.81 | 0.55 | 0.81 | -- |
| Span 4 | 0.38 | 0.62 | 0.30 | -- | -- | -- | -- | -- | -- | -- | 0.49 |

## NOTES:

1. Moments and Reactions are for Interior Girder W2 and Exterior Girder W1.
2. Live load distribution for design was determined by a refined method of analysis.
3. The live load + impact distribution factors provided in the tables on this sheet were computed for HL-93 loading only, and are intended to be used to approximate HL-93 live load + impact demands.
4. The live load + impact distribution factors are in the form of a ratio of the girder live load demand obtained from the refined method of analysis caused by HL-93 loading, divided by the girder live load demand obtained from the application of a single lane of HL-93 loading acting on a single isolated girder.
5. Example calculation of exterior girder live load design moment in Span 3 based on the distribution factors provided in the tables:

   A. From a line girder analysis with a distribution factor of 1.0 lane, the live load moment at Span 3 is found to be:

   MLL+I = 11,614 k-ft per lane

   B. From the Exterior Girder Live Load + Impact Distribution Factor table shown on this sheet, the design distribution factor for positive moment in Span 3 is 0.72. Therefore, the live load + impact moment at Span 3 based on the refined method of analysis is:

   0.72 x 11,614 k-ft = 8,355 k-ft

$I_s$ , $S_s$ : Non-composite moment of inertia and section modulus of the steel section used for computing $f_s$ (Total-Strength I, and Service II) due to non-composite dead loads (in.⁴ and in.³).

$I_c$ (n), $S_c$ (n): Composite moment of inertia and section modulus of the steel and deck based upon the modular ratio, "n", used for computing $f_s$ (Total-Strength I, and Service II) in uncracked sections due to short-term composite live loads (in.⁴ and in.³).

$I_c$ (3n), $S_c$ (3n): Composite moment of inertia and section modulus of the steel and deck based upon 3 times the modular ratio, "3n", used for computing $f_s$ (Total-Strength I, and Service II) in uncracked sections, due to long-term composite (superimposed) dead loads (in.⁴ and in.³).

$I_c$ (cr), $S_c$ (cr): Composite moment of inertia and section modulus of the steel and longitudinal deck reinforcement, used for computing $f_s$ (Total-Strength I and Service II) in cracked sections, due to both short-term composite live loads and long-term composite (superimposed) dead loads (in.⁴ and in.³).

DC1: Un-factored non-composite dead load (kips/ft.).

$M_{DC1}$: Un-factored moment due to non-composite dead load (kip-ft.).

DC2: Un-factored long-term composite (superimposed excluding future wearing surface) dead load (kips/ft.).

$M_{DC2}$: Un-factored moment due to long-term composite (superimposed excluding future wearing surface) dead load (kip-ft.).

DW: Un-factored long-term composite (superimposed future wearing surface only) dead load (kips/ft.).

$M_{DW}$ : Un-factored moment due to long-term composite (superimposed future wearing surface only) dead load (kip-ft.).

LLDF: Live Load Distribution Factor for moment and shear computed from a refined analysis. The multiple presence factors are implicitly included in the values shown.

$M_{LL+IM}$: Un-factored live load moment plus dynamic load allowance (impact) (kip-ft.).

$M_u$ : Strength I load combination of factored design moments (kip-ft.).
$1.25\ (M_{DC1} + M_{DC2}) + 1.5\ M_{DW} + 1.75\ M_{LL+IM}$

$\Phi_f M_n$: Factored nominal flexural resistance of the section determined as specified in Article 6.10.7.1 or A6 as applicable (kip-ft.).

$f_s$ DC1: Un-factored stress at edge of flange for controlling steel flange due to vertical non-composite dead loads as calculated below (ksi).
$M_{DC1} / S_s$

$f_s$ DC2: Un-factored stress at edge of flange for controlling steel flange due to vertical composite dead loads as calculated below (ksi).
$M_{DC2} / S_c$ (3n) or $M_{DC2} / S_c$ (cr) as applicable.

$f_s$ DW: Un-factored stress at edge of flange for controlling steel flange due to vertical composite future wearing surface loads as calculated below (ksi).
$M_{DW} / S_c$ (3n) or $M_{DW} / S_c$ (cr) as applicable.

$f_s$ (LL+ IM): Un-factored stress at edge of flange for controlling steel flange due to vertical composite live load plus impact loads as calculated below (ksi).
$M_{LL+IM} / S_c$ (n) or $M_{LL+IM} / S_c$ (cr) as applicable.

$f_s$ (Service II): Sum of stresses as computed below (ksi).
$f_s$ DC1 + $f_s$ DC2 + $f_s$ DW + 1.3 $f_s$ (LL+ IM)

Service II Resistance: Composite ($0.95R_hF_{yf}$) stress capacity according to Article 6.10.4.2 or web bend buckling (Fcrw) stress according to Article 6.10.1.9.1 (ksi).

$f_s$ (Strength I): Sum of stresses as computed below on non-compact sections (ksi).
1.25 ($f_s$ DC1 + $f_s$ DC2) + 1.5 $f_s$ DW + 1.75 $f_s$ (LL+ IM)

$\Phi_f F_n$: Factored nominal flexural resistance of the section as specified in Article 6.10.7.2 or 6.10.8 as applicable (ksi).

$V_f$: Maximum factored shear range in span computed according to Article 6.10.10.

OCF: Obtuse Correction Factor according to Article 4.6.2.2.3c or as further simplified by IDOT provisions.

$R_{DC1}$: Un-factored reaction due to non-composite dead load (kip).

$R_{DC2}$: Un-factored reaction due to long-term composite (superimposed excluding future wearing surface) dead load (kip).

$R_{DW}$ : Un-factored reaction due to long-term composite (superimposed future wearing surface only) dead load (kip).

$R_{LL}$ : Un-factored live load reaction (kip).

$R_{IM}$ : Un-factored dynamic load allowance (impact) (kip).

$R_{Total}$ (Strength I)(Impact): Strength I load combination of factored design reactions (kip).
$1.25\ (R_{DC1} + R_{DC2}) + 1.5R_{DW} + 1.75\ (R_{LL} + R_{IM})$

$R_{Total}$ (Strength I)(No Impact): Strength I load combination of factored design reactions, not including dynamic load allowance (Impact) (kip).
$1.25\ (R_{DC1} + R_{DC2}) + 1.5R_{DW} + 1.75\ (R_{LL})$

| INTERIOR GIRDER MOMENT TABLE | | | | |
|---|---|---|---|---|
| | | 0.4 Sp. 3 or 0.6 Sp. 5 | Pier 3 or Pier 4 | 0.5 Sp. 4 |
| $I_s$ | (in⁴) | 381,789 | 927,761 | 500,420 |
| $I_c$ (n) | (in⁴) | 711,669 | -- | 877,851 |
| $I_c$ (3n) | (in⁴) | 531,054 | -- | 664,814 |
| $I_c$ (cr) | (in⁴) | -- | 984,195 | -- |
| $S_s$ | (in³) | 7,047 | 12,976 | 9,511 |
| $S_c$ (n) | (in³) | 8,743 | -- | 11,300 |
| $S_c$ (3n) | (in³) | 7,986 | -- | 10,463 |
| $S_c$ (cr) | (in³) | -- | 14,263 | -- |
| DC1 | (k/') | 1.77 | 2.31 | 1.94 |
| $M_{DC1}$ | ('k) | 8,368 | 26,591 | 13,087 |
| DC2 | (k/') | 0.19 | 0.19 | 0.19 |
| $M_{DC2}$ | ('k) | 747 | 2,077 | 902 |
| DW | (k/') | 0.48 | 0.48 | 0.48 |
| $M_{DW}$ | ('k) | 2,308 | 6,427 | 3,243 |
| LLDF | | * | * | * |
| $M_{LL+IM}$ | ('k) | 7,141 | 9,676 | 8,375 |
| ** $M_u$ (Strength I) | ('k) | 28,720 | 65,529 | 38,857 |
| $\Phi_f M_n$ | ('k) | 38,599 | -- | 45,162 |
| $f_s$ DC1 | (ksi) | 14.3 | 24.6 | 16.5 |
| $f_s$ DC2 | (ksi) | 1.1 | 1.8 | 1.0 |
| $f_s$ DW | (ksi) | 3.5 | 5.4 | 3.7 |
| $f_s$ (LL+IM) | (ksi) | 9.8 | 8.1 | 8.9 |
| $f_s$ (Service II) | (ksi) | 31.6 | 42.3 | 32.8 |
| Service II Resistance | (ksi) | 47.5 | 54.7 | 47.5 |
| ** $f_s$ (Strength I) | (ksi) | - | 58.0 | - |
| $\Phi_f F_n$ | (ksi) | - | 68.4 | - |
| $V_f$ | (k) | 82.6 | 99.1 | 62.8 |

| EXTERIOR GIRDER MOMENT TABLE | | | | |
|---|---|---|---|---|
| | | 0.4 Sp. 3 or 0.6 Sp. 5 | Pier 3 or Pier 4 | 0.5 Sp. 4 |
| $I_s$ | (in⁴) | 381,789 | 927,761 | 500,420 |
| $I_c$ (n) | (in⁴) | 691,824 | -- | 853,640 |
| $I_c$ (3n) | (in⁴) | 519,126 | -- | 651,303 |
| $I_c$ (cr) | (in⁴) | -- | 976,214 | -- |
| $S_s$ | (in³) | 7,047 | 12,976 | 9,511 |
| $S_c$ (n) | (in³) | 8,674 | -- | 11,220 |
| $S_c$ (3n) | (in³) | 7,924 | -- | 10,397 |
| $S_c$ (cr) | (in³) | -- | 14,079 | -- |
| DC1 | (k/') | 1.68 | 2.22 | 1.85 |
| $M_{DC1}$ | ('k) | 8,383 | 26,191 | 13,055 |
| DC2 | (k/') | 0.19 | 0.19 | 0.19 |
| $M_{DC2}$ | ('k) | 745 | 2,506 | 893 |
| DW | (k/') | 0.36 | 0.36 | 0.36 |
| $M_{DW}$ | ('k) | 2,249 | 6,133 | 3,163 |
| LLDF | | * | * | * |
| $M_{LL+IM}$ | ('k) | 8,196 | 11,193 | 9,594 |
| ** $M_u$ (Strength I) | ('k) | 30,584 | 67,891 | 40,917 |
| $\Phi_f M_n$ | ('k) | 36,918 | -- | 43,184 |
| $f_s$ DC1 | (ksi) | 14.3 | 24.2 | 16.5 |
| $f_s$ DC2 | (ksi) | 1.2 | 2.1 | 1.0 |
| $f_s$ DW | (ksi) | 3.4 | 5.1 | 3.7 |
| $f_s$ (LL+IM) | (ksi) | 11.3 | 9.5 | 10.3 |
| $f_s$ (Service II) | (ksi) | 33.6 | 44.0 | 34.5 |
| Service II Resistance | (ksi) | 47.5 | 55.3 | 47.5 |
| ** $f_s$ (Strength I) | (ksi) | - | 60.0 | - |
| $\Phi_f F_n$ | (ksi) | - | 68.4 | - |
| $V_f$ | (k) | 69.0 | 94.5 | 68.7 |

Note: The analysis considers 2 scenarios: stresses resulting from the staged construction sequence and stresses assuming a single deck pour.

| INTERIOR GIRDER REACTION TABLE | | | |
|---|---|---|---|
| | | Pier 2 & Pier 5 | Pier 3 & Pier 4 |
| LLDF | | * | * |
| OCF | | -- | -- |
| $R_{DC1}$ | (k) | 173.7 | 759.3 |
| $R_{DC2}$ | (k) | 11.7 | 52.9 |
| $R_{DW}$ | (k) | 46.6 | 187.3 |
| $R_{LL}$ | (k) | 120.2 | 287.4 |
| $R_{IM}$ | (k) | 19.9 | 35.4 |
| ** $R_{Total}$ (Strength I)(Impact) | (k) | 574.2 | 1,954.2 |
| ** $R_{Total}$ (Strength I)(No Impact) | (k) | 537.6 | 1,889.1 |

| EXTERIOR GIRDER REACTION TABLE | | | |
|---|---|---|---|
| | | Pier 2 & Pier 5 | Pier 3 & Pier 4 |
| LLDF | | * | * |
| OCF | | -- | -- |
| $R_{DC1}$ | (k) | 174.1 | 755.0 |
| $R_{DC2}$ | (k) | 29.7 | 102.9 |
| $R_{DW}$ | (k) | 44.8 | 163.9 |
| $R_{LL}$ | (k) | 128.9 | 296.5 |
| $R_{IM}$ | (k) | 20.5 | 38.0 |
| ** $R_{Total}$ (Strength I)(Impact) | (k) | 612.6 | 1,998.8 |
| ** $R_{Total}$ (Strength I)(No Impact) | (k) | 574.9 | 1,929.0 |

* See LLDF Tables on sheet S-75

** Limit states for moment, stress, and reaction shown include a load modifier factor of 1.05 relating to operational classification for an essential bridge

## NOTES:

1. Moments and Reactions are for Interior Girder E7 and Exterior Girder E8.
2. Live load distribution for design was determined by a refined method of analysis.
3. The live load + impact distribution factors provided in the tables on this sheet were computed for HL-93 loading only, and are intended to be used to approximate HL-93 live load + impact demands.
4. The live load + impact distribution factors are in the form of a ratio of the girder live load demand obtained from the refined method of analysis caused by HL-93 loading, divided by the girder live load demand obtained from the application of a single lane of HL-93 loading acting on a single isolated girder.
5. Example calculation of exterior girder live load design moment in Span 3 based on the distribution factors provided in the tables:

   A. From a line girder analysis with a distribution factor of 1.0 lane, the live load moment at Span 3 is found to be:

   MLL+I = 11,614 k-ft per lane

   B. From the Exterior Girder Live Load + Impact Distribution Factor table shown on this sheet, the design distribution factor for positive moment in Span 3 is 0.72. Therefore, the live load + impact moment at Span 3 based on the refined method of analysis is:

   0.72 x 11,614 k-ft = 8,355 k-ft

$I_s$ , $S_s$ : Non-composite moment of inertia and section modulus of the steel section used for computing $f_s$ (Total-Strength I, and Service II) due to non-composite dead loads (in.⁴ and in.³).

$I_c$ (n), $S_c$ (n): Composite moment of inertia and section modulus of the steel and deck based upon the modular ratio, "n", used for computing $f_s$ (Total-Strength I, and Service II) in uncracked sections due to short-term composite live loads (in.⁴ and in.³).

$I_c$ (3n), $S_c$ (3n): Composite moment of inertia and section modulus of the steel and deck based upon 3 times the modular ratio, "3n", used for computing $f_s$ (Total-Strength I, and Service II) in uncracked sections, due to long-term composite (superimposed) dead loads (in.⁴ and in.³).

$I_c$ (cr), $S_c$ (cr): Composite moment of inertia and section modulus of the steel and longitudinal deck reinforcement, used for computing $f_s$ (Total-Strength I and Service II) in cracked sections, due to both short-term composite live loads and long-term composite (superimposed) dead loads (in.⁴ and in.³).

DC1: Un-factored non-composite dead load (kips/ft.).

$M_{DC1}$: Un-factored moment due to non-composite dead load (kip-ft.).

DC2: Un-factored long-term composite (superimposed excluding future wearing surface) dead load (kips/ft.).

$M_{DC2}$: Un-factored moment due to long-term composite (superimposed excluding future wearing surface) dead load (kip-ft.).

DW: Un-factored long-term composite (superimposed future wearing surface only) dead load (kips/ft.).

$M_{DW}$ : Un-factored moment due to long-term composite (superimposed future wearing surface only) dead load (kip-ft.).

LLDF: Live Load Distribution Factor for moment and shear computed from a refined analysis. The multiple presence factors are implicitly included in the values shown.

$M_{LL+IM}$: Un-factored live load moment plus dynamic load allowance (impact) (kip-ft.).

$M_u$ : Strength I load combination of factored design moments (kip-ft.).
$1.25\ (M_{DC1} + M_{DC2}) + 1.5\ M_{DW} + 1.75\ M_{LL+IM}$

$\Phi_f M_n$: Factored nominal flexural resistance of the section determined as specified in Article 6.10.7.1 or A6 as applicable (kip-ft.).

$f_s$ DC1: Un-factored stress at edge of flange for controlling steel flange due to vertical non-composite dead loads as calculated below (ksi).
$M_{DC1} / S_s$

$f_s$ DC2: Un-factored stress at edge of flange for controlling steel flange due to vertical composite dead loads as calculated below (ksi).
$M_{DC2} / S_c$ (3n) or $M_{DC2} / S_c$ (cr) as applicable.

$f_s$ DW: Un-factored stress at edge of flange for controlling steel flange due to vertical composite future wearing surface loads as calculated below (ksi).
$M_{DW} / S_c$ (3n) or $M_{DW} / S_c$ (cr) as applicable.

$f_s$ (LL+ IM): Un-factored stress at edge of flange for controlling steel flange due to vertical composite live load plus impact loads as calculated below (ksi).
$M_{LL+IM} / S_c$ (n) or $M_{LL+IM} / S_c$ (cr) as applicable.

$f_s$ (Service II): Sum of stresses as computed below (ksi).
$f_s$ DC1 + $f_s$ DC2 + $f_s$ DW + 1.3 $f_s$ (LL+ IM)

Service II Resistance: Composite ($0.95R_hF_{yf}$) stress capacity according to Article 6.10.4.2 or web bend buckling (Fcrw) stress according to Article 6.10.1.9.1 (ksi).

$f_s$ (Strength I): Sum of stresses as computed below on non-compact sections (ksi).
1.25 ($f_s$ DC1 + $f_s$ DC2) + 1.5 $f_s$ DW + 1.75 $f_s$ (LL+ IM)

$\Phi_f F_n$: Factored nominal flexural resistance of the section as specified in Article 6.10.7.2 or 6.10.8 as applicable (ksi).

$V_f$: Maximum factored shear range in span computed according to Article 6.10.10.

OCF: Obtuse Correction Factor according to Article 4.6.2.2.3c or as further simplified by IDOT provisions.

$R_{DC1}$: Un-factored reaction due to non-composite dead load (kip).

$R_{DC2}$: Un-factored reaction due to long-term composite (superimposed excluding future wearing surface) dead load (kip).

$R_{DW}$ : Un-factored reaction due to long-term composite (superimposed future wearing surface only) dead load (kip).

$R_{LL}$ : Un-factored live load reaction (kip).

$R_{IM}$ : Un-factored dynamic load allowance (impact) (kip).

$R_{Total}$ (Strength I)(Impact): Strength I load combination of factored design reactions (kip).
$1.25\ (R_{DC1} + R_{DC2}) + 1.5R_{DW} + 1.75\ (R_{LL} + R_{IM})$

$R_{Total}$ (Strength I)(No Impact): Strength I load combination of factored design reactions, not including dynamic load allowance (Impact) (kip).
$1.25\ (R_{DC1} + R_{DC2}) + 1.5R_{DW} + 1.75\ (R_{LL})$

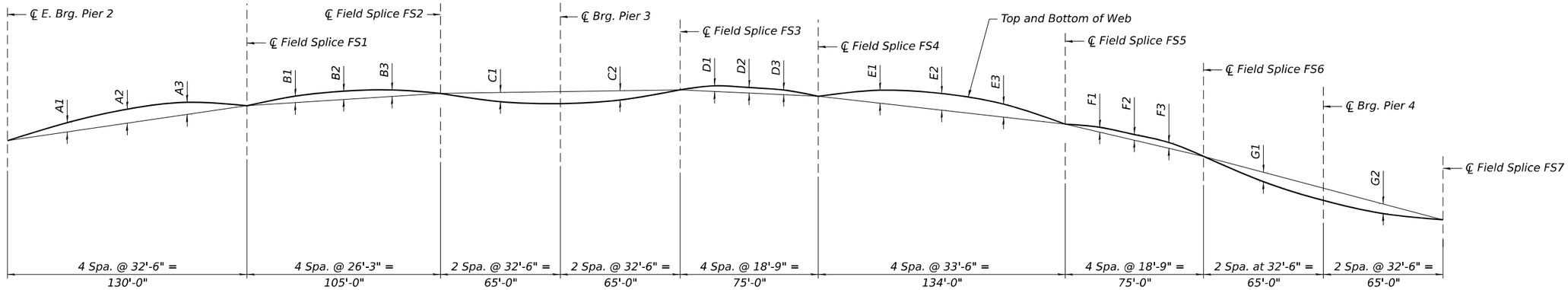


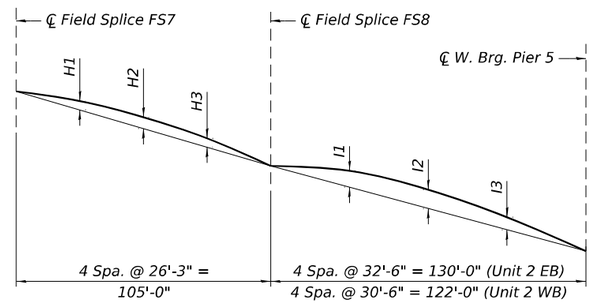


## CAMBER DIAGRAM - UNIT 2

## NOTES:

1. Camber values shown here were developed based on the deck pour sequence shown on sheet S-57.
2. Any deviation from the pouring sequence will result in changes to the camber. If the contractor chooses to change the sequence, then the proposed plan revisions and design calculations shall be submitted to the engineer for review and approval. The plan and calculations shall be prepared and sealed by a Licensed Structural Engineer in Illinois.
3. The theoretical deflections used to determine the girder camber values and top of web elevations shown in these tables include the weight of steel, deck concrete, and the parapets. The net effects of temporary formwork, assumed to be 10psf of the deck surface area, placed on the noncomposite structure and later removed from the composite structure are included in these theoretical deflections.

## CAMBER DIMENSIONS - UNIT 2

| Location | ℄ E. Brg. Pier 2 | A1 | A2 | A3 | ℄ FS1 | B1 | B2 | B3 | ℄ FS2 | C1 | ℄ Brg. Pier 3 | C2 | ℄ FS3 | D1 | D2 | D3 | ℄ FS4 | E1 | E2 | E3 |
|---|---|---|---|---|---|---|---|---|---|---|---|---|---|---|---|---|---|---|---|---|
| Girder E1 to E8 | 0" | 2½" | 3⅝" | 3" | 0" | 1⅝" | 1¾" | 1¼" | 0" | -2½" | -3⅛" | -2⅜" | 0" | ⅝" | ⅞" | ¾" | 0" | 3½" | 4⅝" | 3½" |
| Girder W1 to W8 | 0" | 2½" | 3⅝" | 2⅞" | 0" | 1⅝" | 1¾" | 1¼" | 0" | -2½" | -3⅛" | -2⅜" | 0" | ⅝" | ⅞" | ⅞" | 0" | 3½" | 4⅝" | 3½" |

## CAMBER DIMENSIONS - UNIT 2 (CONT.)

| Location | ℄ FS5 | F1 | F2 | F3 | ℄ FS6 | G1 | ℄ Brg. Pier 4 | G2 | ℄ FS7 | H1 | H2 | H3 | ℄ FS8 | I1 | I2 | I3 | ℄ W. Brg. Pier 5 |
|---|---|---|---|---|---|---|---|---|---|---|---|---|---|---|---|---|---|
| Girder E1 to E8 | 0" | ¾" | ⅞" | ⅝" | 0" | -2⅜" | -3⅛" | -2½" | 0" | 1¼" | 1¾" | 1⅝" | 0" | 3" | 3⅝" | 2½" | 0" |
| Girder W1 to W8 | 0" | ⅞" | ⅞" | ⅝" | 0" | -2⅜" | -3" | -2⅜" | 0" | 1¼" | 1¾" | 1½" | 0" | 2½" | 3" | 2⅛" | 0" |

## TOP OF WEB ELEVATION - UNIT 2 EB

(For Fabrication Only)

| Location | ℄ E. Brg. Pier 2 | ℄ FS1 | ℄ FS2 | ℄ Brg. Pier 3 | ℄ FS3 | ℄ FS4 | ℄ FS5 | ℄ FS6 | ℄ Brg. Pier 4 | ℄ FS7 | ℄ FS8 | ℄ W. Brg. Pier 5 |
|---|---|---|---|---|---|---|---|---|---|---|---|---|
| Girder E1 | 601.250 | 603.004 | 602.778 | 602.598 | 602.938 | 603.297 | 602.033 | 600.259 | 598.691 | 597.644 | 595.890 | 591.681 |
| Girder E2 | 601.441 | 603.196 | 602.970 | 602.790 | 603.130 | 603.488 | 602.225 | 600.451 | 598.883 | 597.836 | 596.081 | 591.872 |
| Girder E3 | 601.633 | 603.388 | 603.161 | 602.981 | 603.322 | 603.680 | 602.416 | 600.642 | 599.075 | 598.028 | 596.273 | 592.064 |
| Girder E4 | 601.789 | 603.543 | 603.317 | 603.137 | 603.477 | 603.836 | 602.572 | 600.798 | 599.230 | 598.183 | 596.429 | 592.219 |
| Girder E5 | 601.789 | 603.543 | 603.317 | 603.137 | 603.477 | 603.836 | 602.572 | 600.798 | 599.230 | 598.183 | 596.429 | 592.219 |
| Girder E6 | 601.633 | 603.388 | 603.161 | 602.981 | 603.322 | 603.680 | 602.416 | 600.642 | 599.075 | 598.028 | 596.273 | 592.064 |
| Girder E7 | 601.441 | 603.196 | 602.970 | 602.790 | 603.130 | 603.488 | 602.225 | 600.451 | 598.883 | 597.836 | 596.081 | 591.872 |
| Girder E8 | 601.250 | 603.004 | 602.778 | 602.598 | 602.938 | 603.297 | 602.033 | 600.259 | 598.691 | 597.644 | 595.890 | 591.681 |

## TOP OF WEB ELEVATION - UNIT 2 WB

(For Fabrication Only)

| Location | ℄ E. Brg. Pier 2 | ℄ FS1 | ℄ FS2 | ℄ Brg. Pier 3 | ℄ FS3 | ℄ FS4 | ℄ FS5 | ℄ FS6 | ℄ Brg. Pier 4 | ℄ FS7 | ℄ FS8 | ℄ W. Brg. Pier 5 |
|---|---|---|---|---|---|---|---|---|---|---|---|---|
| Girder W1 | 601.583 | 603.157 | 602.796 | 602.539 | 602.806 | 603.082 | 601.658 | 599.772 | 598.089 | 596.914 | 594.953 | 590.933 |
| Girder W2 | 601.775 | 603.349 | 602.987 | 602.730 | 602.998 | 603.274 | 601.849 | 599.964 | 598.281 | 597.106 | 595.145 | 591.124 |
| Girder W3 | 601.967 | 603.540 | 603.179 | 602.922 | 603.190 | 603.465 | 602.041 | 600.156 | 598.473 | 597.297 | 595.337 | 591.316 |
| Girder W4 | 602.122 | 603.696 | 603.334 | 603.078 | 603.345 | 603.621 | 602.197 | 600.311 | 598.628 | 597.453 | 595.492 | 591.471 |
| Girder W5 | 602.122 | 603.696 | 603.334 | 603.078 | 603.345 | 603.621 | 602.197 | 600.311 | 598.628 | 597.453 | 595.492 | 591.471 |
| Girder W6 | 601.967 | 603.540 | 603.179 | 602.922 | 603.190 | 603.465 | 602.041 | 600.156 | 598.473 | 597.297 | 595.337 | 591.316 |
| Girder W7 | 601.775 | 603.349 | 602.987 | 602.730 | 602.998 | 603.274 | 601.849 | 599.964 | 598.281 | 597.106 | 595.145 | 591.124 |
| Girder W8 | 601.583 | 603.157 | 602.796 | 602.539 | 602.806 | 603.082 | 601.658 | 599.772 | 598.089 | 596.914 | 594.953 | 590.933 |

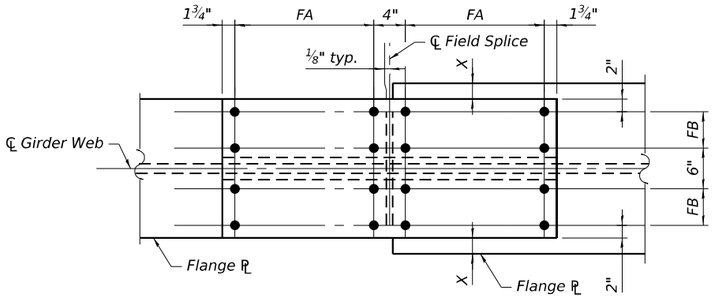


TOP FLANGE

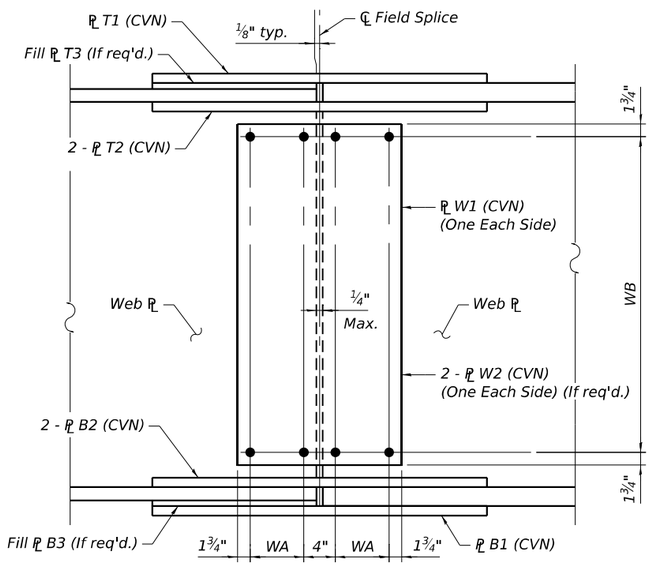


ELEVATION

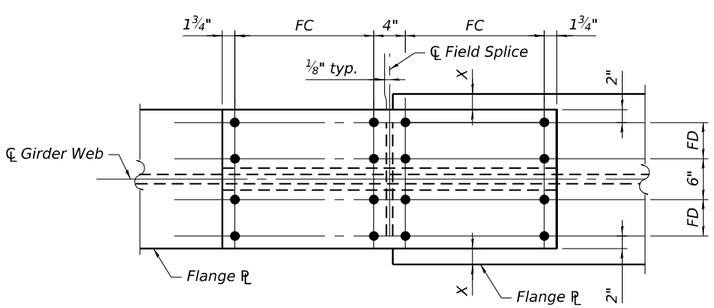


BOTTOM FLANGE

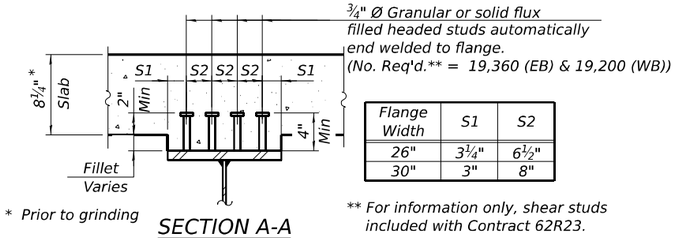


| Flange Width | S1 | S2 |
|---|---|---|
| 26" | 3¼" | 6½" |
| 30" | 3" | 8" |

* Prior to grinding

SECTION A-A

** For information only, shear studs included with Contract 62R23.

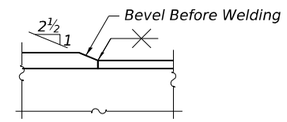


DETAIL C

Do not place shear connectors on top lateral bracing bolted connection.
Move studs beyond the nearest bolt as necessary. Exterior girder is shown.
Interior girder similar.

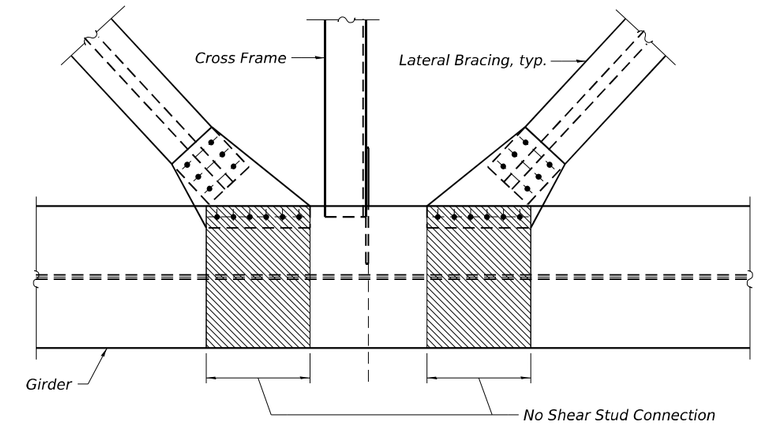


DETAIL D

## SPLICE PLATE TABLE

| Top Flange | | | | | | |
|---|---|---|---|---|---|---|
| Field Splice | Splice PL | | Filler PL | Bolt Spacing | | X |
| | T1 | T2 | T3 | FA | FB | |
| FS1 & FS8 | ¾"x2'-2"x2'-7½" | ⅞"x1'-0⅛"x2'-7½" | - | 4 Spa. at 3" | 2 Spa. at 4" | - |
| FS2 & FS7 | ¾"x2'-2"x6'-7½" | ⅞"x1'-0⅛"x6'-7½" | ¼"x2'-2"x3'-3⅝" | 18 Spa. at 2" Alt. Cts. | 2 Spa. at 4" | 2" |
| FS3 & FS6 | ¾"x2'-6"x3'-7½" | ⅞"x1'-2⅛"x3'-7½" | ¼"x2'-6"x1'-9⅝" | 6 Spa. at 3" | 2 Spa. at 5" | - |
| FS4 & FS5 | ¾"x2'-6"x3'-7½" | ⅞"x1'-2⅛"x3'-7½" | - | 6 Spa. at 3" | 2 Spa. at 5" | - |

| Web | | | | |
|---|---|---|---|---|
| Field Splice | Splice PL | Filler PL | Bolt Spacing | |
| | W1 | W2 | WA | WB |
| FS1 & FS8 | ½"x1'-7½"x9'-1¾" | - | 2 Spa. at 3" | 25 Spa. at 4¼" |
| FS2 & FS7 | ⅝"x1'-7½"x9'-1¾" | 3/32"x9⅝"x9'-1¾" | 2 Spa. at 3" | 25 Spa. at 4¼" |
| FS3 & FS6 | ½"x1'-7½"x9'-2¾" | 3/32"x9⅝"x9'-2¾" | 2 Spa. at 3" | 22 Spa. at 4⅞" |
| FS4 & FS5 | ½"x1'-7½"x9'-2¾" | - | 2 Spa. at 3" | 22 Spa. at 4⅞" |

| Bottom Flange | | | | | | |
|---|---|---|---|---|---|---|
| Field Splice | Splice PL | | Filler PL | Bolt Spacing | | X |
| | B1 | B2 | B3 | FC | FD | |
| FS1 & FS8 | 1"x2'-4"x5'-11½" | 1⅛"x1'-1⅛"x5'-11½" | - | 16 Spa. at 2" Alt. Cts. | 2 Spa. at 4½" | - |
| FS2 & FS7 | ⅞"x2'-4"x4'-7½" | 1"x1'-1⅛"x4'-7½" | - | 8 Spa. at 3" | 2 Spa. at 4½" | 2" |
| FS3 & FS6 | ⅞"x2'-8"x4'-7½" | 1"x1'-3⅛"x4'-7½" | ¼"x2'-8"x2'-3⅝" | 8 Spa. at 3" | 2 Spa. at 5½" | - |
| FS4 & FS5 | ⅞"x2'-8"x5'-7½" | 1"x1'-3⅛"x5'-7½" | ¾"x2'-8"x2'-9⅝" | 10 Spa. at 3" | 2 Spa. at 5½" | - |

| Field Splice | No. Req'd WB | No. Req'd EB |
|---|---|---|
| FS1 | 8 | 8 |
| FS2 | 8 | 8 |
| FS3 | 8 | 8 |
| FS4 | 8 | 8 |
| FS5 | 8 | 8 |
| FS6 | 8 | 8 |
| FS7 | 8 | 8 |
| FS8 | 8 | 8 |

## NOTES:

1. Fasteners shall be ASTM F3125 Grade A325 Type 3 weathering steel bolts in unpainted areas. Bolts ⅞" ∅, holes 15/16" ∅.
2. All splice plates shall be AASHTO M270 Grade 50W steel, unless noted otherwise.
3. Load carrying components designated (CVN) denotes Charpy V-Notch Impact Energy Requirement, Zone 2.
4. Class B contact surface, for slip resistance, shall be provided for all connections.


WSP USA Inc.
30 N. LASALLE STREET
SUITE 4200
CHICAGO, IL 60602
TEL: (312) 782-8150
FAX: (312) 782-1684


| | | | |
|---|---|---|---|
| USER NAME = USFM703216 | DESIGNED - KB | REVISED - | |
| | CHECKED - LAS | REVISED - | |
| PLOT SCALE = 0:2 ':" / in. | DRAWN - KB | REVISED - | |
| PLOT DATE = 12/7/2024 | CHECKED - LAS/PJL | REVISED - | |

**STATE OF ILLINOIS**
**DEPARTMENT OF TRANSPORTATION**

**FIELD SPLICE DETAILS - UNIT 2 WB & EB**
**STRUCTURE NUMBER 099-8309 WB AND 099-8325 EB**

SHEET S-78 OF S-87 SHEETS

| F.A.I RTE. | SECTION | COUNTY | TOTAL SHEETS | SHEET NO. |
|---|---|---|---|---|
| I-80 | (99-3DEFP) HF 23 | WILL | 89 | 80 |
| | | CONTRACT NO. 62W52 | | |
| | ILLINOIS | FED. AID PROJECT | | |


MODEL: Default
FILE NAME: pw://transystems-pw.bentley.com:transyscorp-pw1-hosted/Documents/Projects_2018/CH401/401180022/03-WSP/CAD/62W52-SF-3/Sheets/0998309-62W52-S078-BM210.dgn

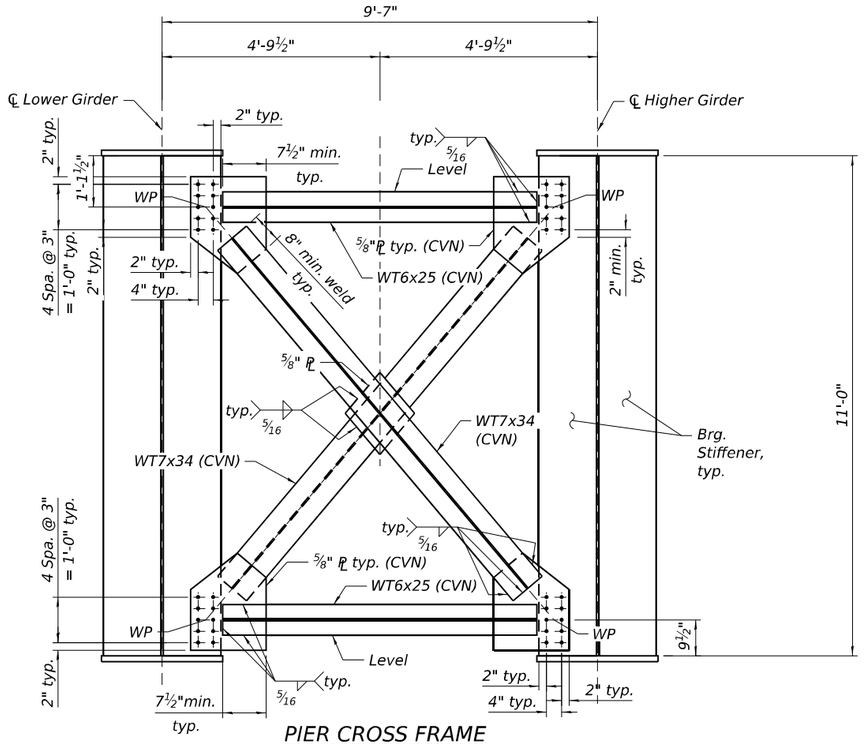


## PIER CROSS FRAME

At Piers 3 & 4

(CF-2 - 14 Required EB, 14 Required WB)

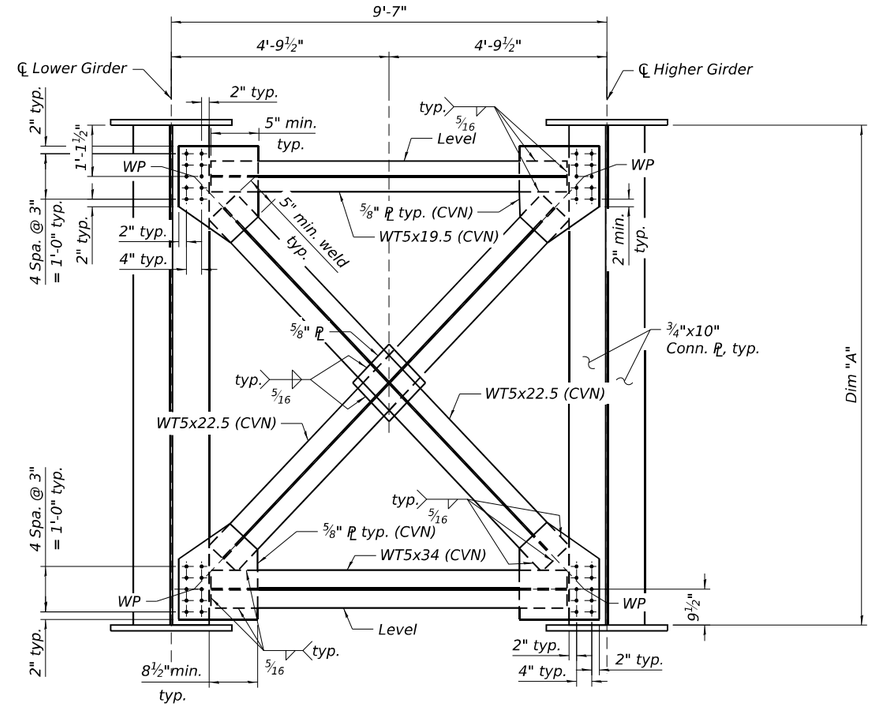


## INTERIOR CROSS FRAME

(CF-3, CF-4, & CF-5)

| Cross Frame | Web Dim "A" | Number Required * | | | |
|---|---|---|---|---|---|
| | | Span 3 | Span 4 | Span 5 | Total |
| CF-3 | 9'-8" | 70 | 91 | 70 | 231 |
| CF-4 | 9'-10" | 7 | 14 | 7 | 28 |
| CF-5 | 10'-6" | 7 | 14 | 7 | 28 |

* Number required per structure EB & WB.

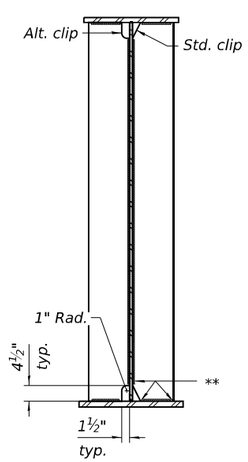


## WELD LIMITS AND CLIP DETAILS

** Stop welds ¼" (±⅛") from edges as shown. Typical.

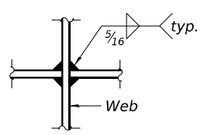


## WEB WELD DETAIL

## NOTES:

1. All steel for the cross frames and connection plates shall conform to the requirements of AASHTO M270 Grade 50W, unless otherwise noted.
2. All steel for the bearing stiffeners, jacking stiffeners and transverse stiffeners shall conform to the requirements of AASHTO M270 Grade 50W.
3. For location of cross frames, see sheets S-69 to S-74.
4. All bolted cross frame connections shall be ASTM F3125, Grade A325 Type 3, ⅞"Ø bolts in 1 1/16"Ø holes, unless otherwise noted.
5. Two hardened washers required for each oversized hole.
6. Class B contact surface, for slip resistance, shall be provided for all crossframes.
7. All cross frames between girders shall be installed with erection pins and bolts in accordance with the erection plan approved by the Engineer. Individual cross frames at supports may be temporarily disconnected to install bearing anchor bolts.
8. Load carrying components designated "CVN" shall conform to the Charpy-V-Notch Impact Energy Requirement, Zone 2.

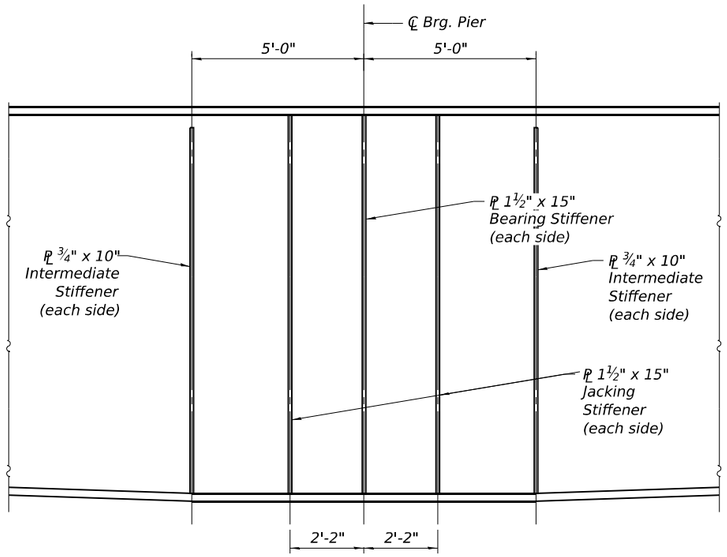


## DETAIL B

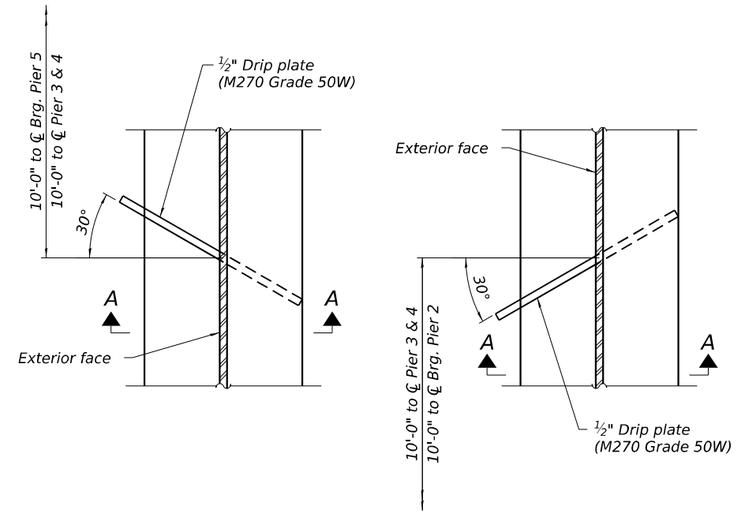


## DRIP PLATE - PLAN

(24 Required, see Framing Plans for locations)

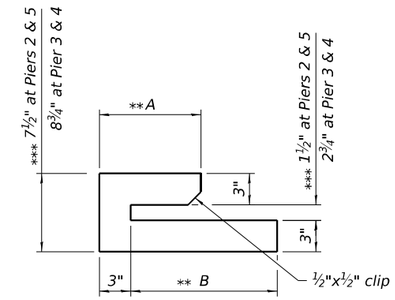


** Adjust A and B to fit girder bottom flange.
*** Adjust dimensions as required for thickness tolerance and fit-up.

## DRIP PLATE - ELEVATION

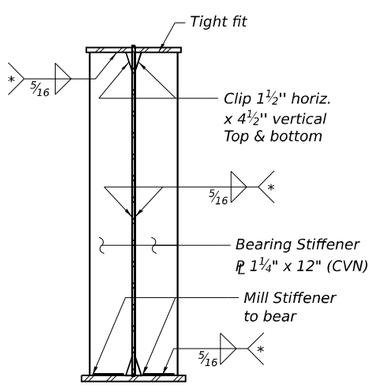


## BEARING & JACKING STIFFENER

At Piers 2 & 5
(No. Plates Required = 64 EB)
(No. Plates Required = 64 WB)

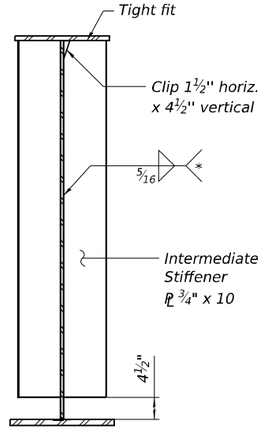


## INTERMEDIATE STIFFENER

At Piers 2 & 5
(No. Plates Required = 32 EB)
(No. Plates Required = 32 WB)

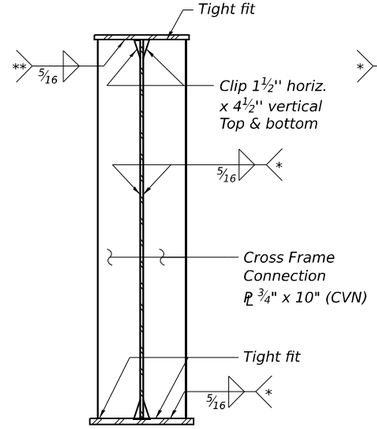


## CONNECTION PLATE

(No. Plates Required = 574 EB)
(No. Plates Required = 574 WB)

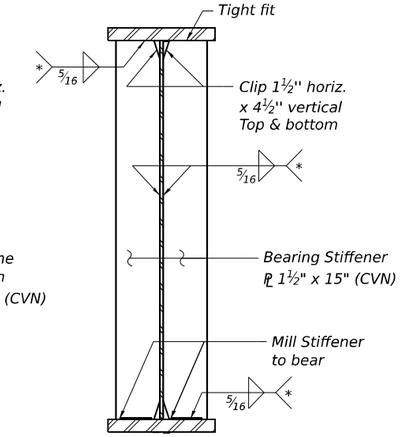


## BEARING & JACKING STIFFENER

At Piers 3 & 4
(No. Plates Required = 96 EB)
(No. Plates Required = 96 WB)

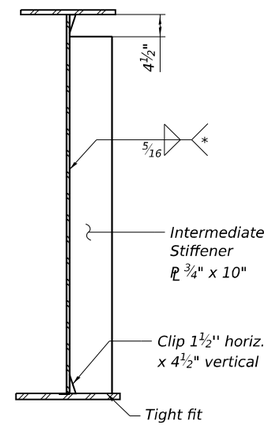


## INTERMEDIATE STIFFENER

Near Piers 3 & 4
(No. Plates Required = 32 EB)
(No. Plates Required = 32 WB)

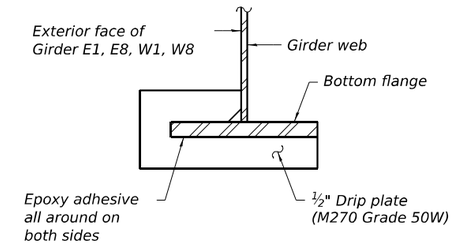


## SECTION A-A

* Stop welds ¼" (±⅛") as shown on sheet S-69. Typical.

## NOTES:

1. All steel for bearing stiffeners, jacking stiffeners and transverse stiffeners shall conform to the requirements of AASHTO M270 Grade 50W.
2. Bearing and jacking stiffeners to be vertical under full dead load, unless noted otherwise.
3. Cost of drip plates and adhesive included with Furnishing Structural Steel, Lump Sum.
4. Drip plate shall be installed using a two component epoxy suitable for structural steel under prolonged exposure.
5. Load carrying components designated "CVN" shall conform to the Charpy-V-Notch Impact Energy Requirement, Zone 2.

MODEL: Default
FILE NAME: pw://transystems-pw.bentley.com:transyscorp-pw1-hosted/Documents/Projects_2018/CH401/401180022/03-WSP/CAD/62W52-SF-3/Sheets/0998309-62W52-S080-BM212.dgn

WSP USA Inc.
30 N. LASALLE STREET
SUITE 4200
CHICAGO, IL 60602
TEL: (312) 782-8150
FAX: (312) 782-1684

| | | | |
|---|---|---|---|
| USER NAME = USFM703216 | DESIGNED - KB | REVISED - | |
| | CHECKED - LAS | REVISED - | |
| PLOT SCALE = 0:2 ':' / in. | DRAWN - KB | REVISED - | |
| PLOT DATE = 12/7/2024 | CHECKED - LAS/PSK | REVISED - | |

**STATE OF ILLINOIS**
**DEPARTMENT OF TRANSPORTATION**

**STIFFENER DETAILS - UNIT 2 WB & EB**
**STRUCTURE NUMBER 099-8309 WB AND 099-8325 EB**

SHEET S-80 OF S-87 SHEETS

| F.A.I RTE. | SECTION | COUNTY | TOTAL SHEETS | SHEET NO. |
|---|---|---|---|---|
| I-80 | (99-3DEFP) HF 23 | WILL | 89 | 82 |
| | | CONTRACT NO. 62W52 | | |
| | | ILLINOIS | FED. AID PROJECT | |

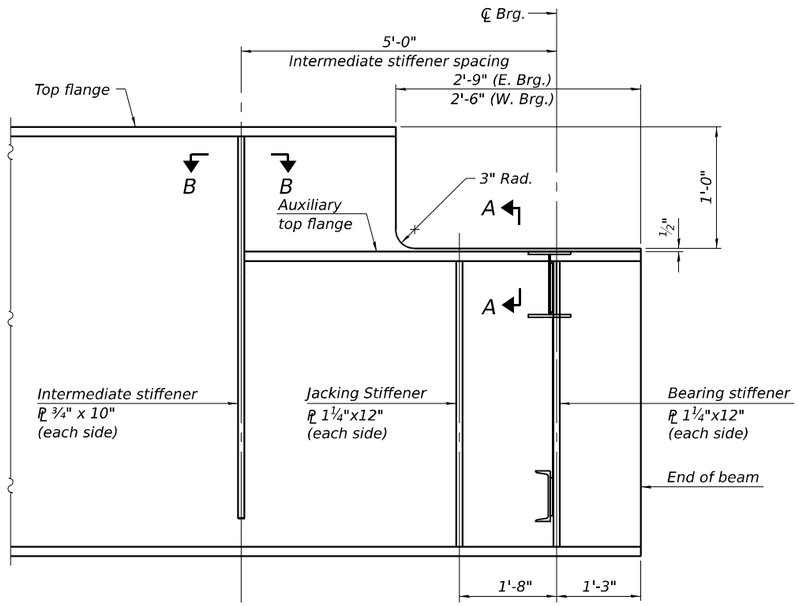


TYPICAL BEAM END
DETAIL A

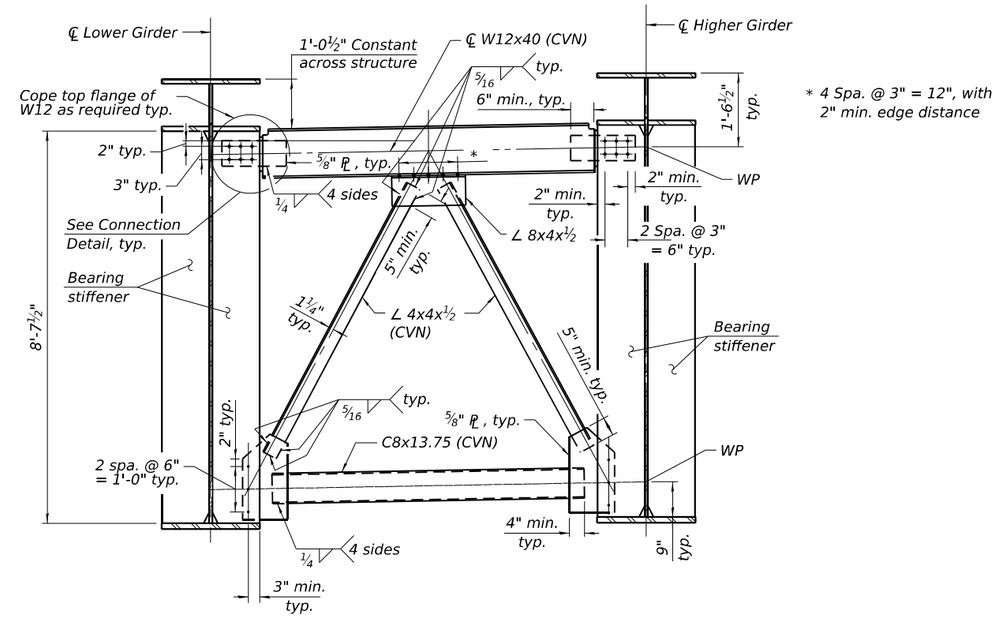


TYPICAL END CROSS-FRAME
At Piers 2 & 5
(CF-1 - 14 Required EB, 14 Required WB)

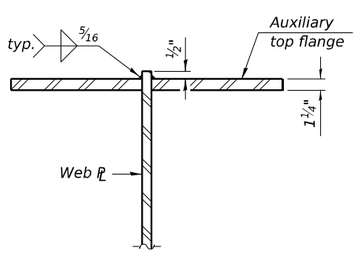


SECTION A-A

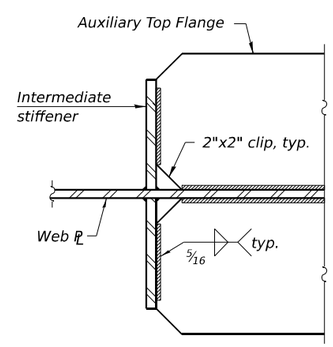


SECTION B-B

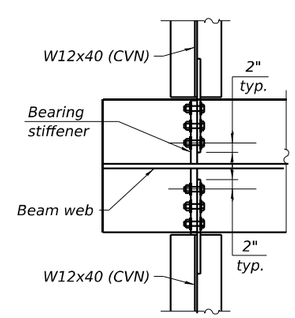


CONNECTION
DETAIL

## NOTES:

1. All steel for the cross frames and connection plates shall conform to the requirements of AASHTO M270 Grade 50W, unless otherwise noted.
2. All steel for the bearing stiffeners, jacking stiffeners and transverse stiffeners shall conform to the requirements of AASHTO M270 Grade 50W.
3. For location of cross frames, see sheets S-69 to S-74.
4. All bolted cross frame connections shall be ASTM F3125, Grade A325 Type 1, 7/8"Ø bolts in 1 1/16"Ø holes, unless otherwise noted.
5. Two hardened washers required for each oversized hole.
6. Class B contact surface, for slip resistance, shall be provided for all crossframes.
7. All cross frames between girders shall be installed with erection pins and bolts in accordance with the erection plan approved by the Engineer. Individual cross frames at supports may be temporarily disconnected to install bearing anchor bolts.
8. Load carrying components designated "CVN" shall conform to the Charpy-V-Notch Impact Energy Requirement, Zone 2.

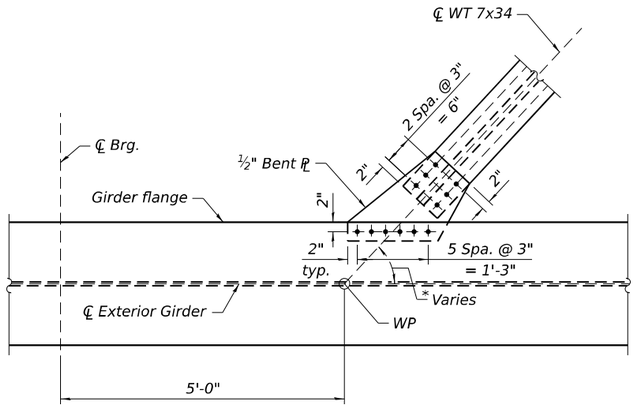


DETAIL 1
TOP LATERAL BRACING CONNECTION
NEAR END PIER

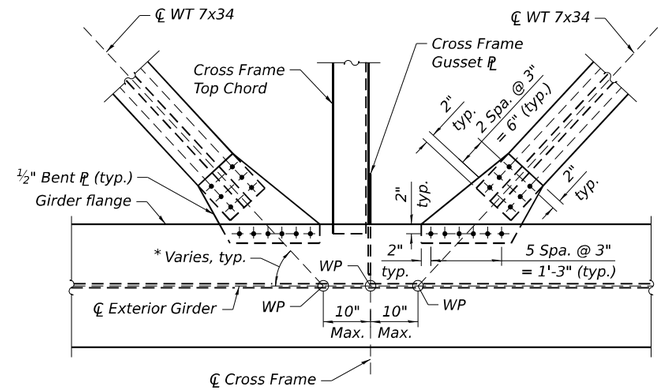


DETAIL 2
TOP LATERAL BRACING CONNECTION
AT EXTERIOR GIRDER

(TYPICAL)

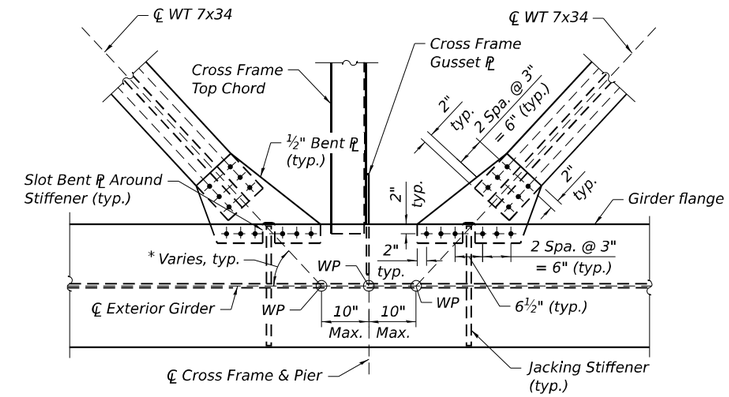


DETAIL 2A
TOP LATERAL BRACING CONNECTION
AT EXTERIOR GIRDER

(AT PIERS 3 & 4)

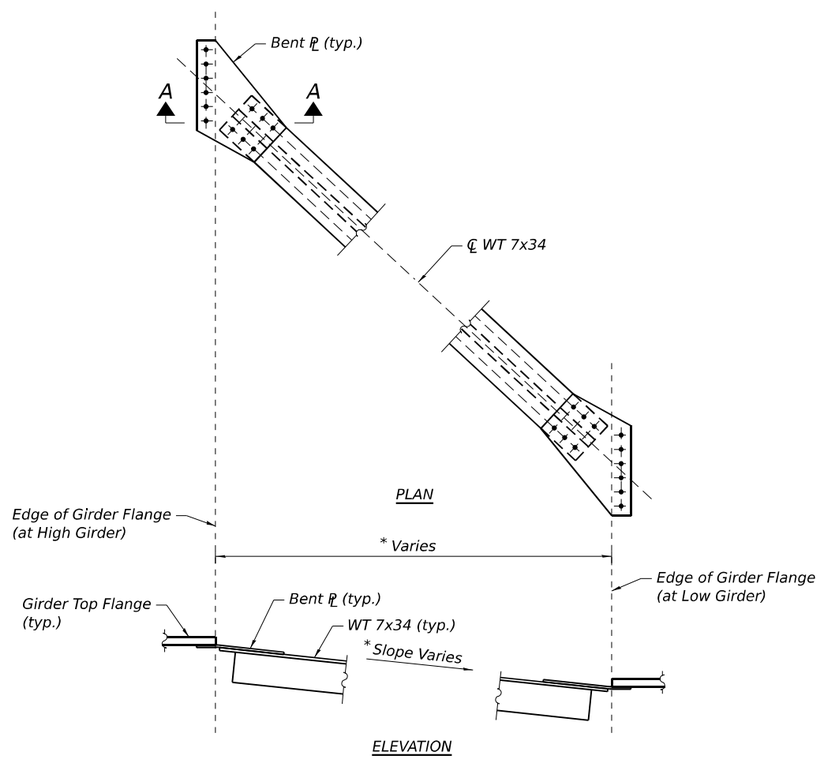


TOP LATERAL GUSSET PLATE BEND DETAIL

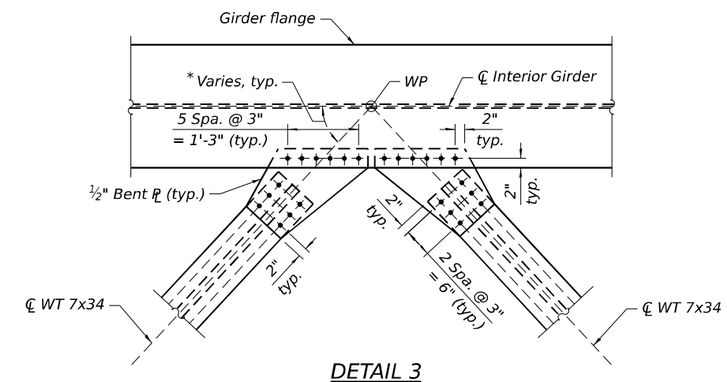


DETAIL 3
TOP LATERAL BRACING CONNECTION
AT INTERIOR GIRDER

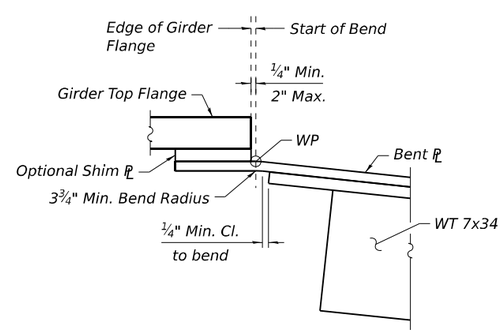


SECTION A-A

## NOTES:

1. All bolted top lateral bracing connections shall be ⅞" ∅ bolts in 1 1/16" ∅ holes. Fasteners shall be ASTM F 3125 Grade A325 Type 3 weathering steel bolts, except at girder ends which shall be ASTM F 3125 Grade A325 Type 1, mechanically galvanized bolts.
2. Class B contact surface for slip resistance, shall be provided for all lateral bracing connections.
3. Two hardened washers required for each oversized hole.
4. To compensate for cross slope and difference in adjacent girder elevations, bend top lateral gusset plate as shown in detail. W.P. locations may be adjusted as req'd near field splices.
5. All structural steel shall be AASHTO M270 Grade 50W.

* To be detailed in shop drawings.


WSP USA Inc.
30 N. LASALLE STREET
SUITE 4200
CHICAGO, IL 60602
TEL: (312) 782-8150
FAX: (312) 782-1684


| | | | |
|---|---|---|---|
| USER NAME = USFM703216 | DESIGNED - KB | REVISED - | |
| | CHECKED - LAS | REVISED - | |
| PLOT SCALE = 4:0 ':" / in. | DRAWN - BK | REVISED - | |
| PLOT DATE = 12/7/2024 | CHECKED - PSK | REVISED - | |

STATE OF ILLINOIS
DEPARTMENT OF TRANSPORTATION

LATERAL BRACING DETAILS - UNIT 2 WB & EB
STRUCTURE NUMBER 099-8309 WB AND 099-8325 EB

SHEET S-82 OF S-87 SHEETS

| F.A.I RTE. | SECTION | COUNTY | TOTAL SHEETS | SHEET NO. |
|---|---|---|---|---|
| I-80 | (99-3DEFP) HF 23 | WILL | 89 | 84 |
| | | CONTRACT NO. 62W52 | | |
| | ILLINOIS | FED. AID PROJECT | | |


MODEL: Default
FILE NAME: pw://transystems-pw.bentley.com:transyscorp-pw1-hosted/Documents/Projects_2018/C-H401/401180022/03-WSP/CAD/62W52-SF-3/Sheets/0998309-62W52-S082-BM214.dgn

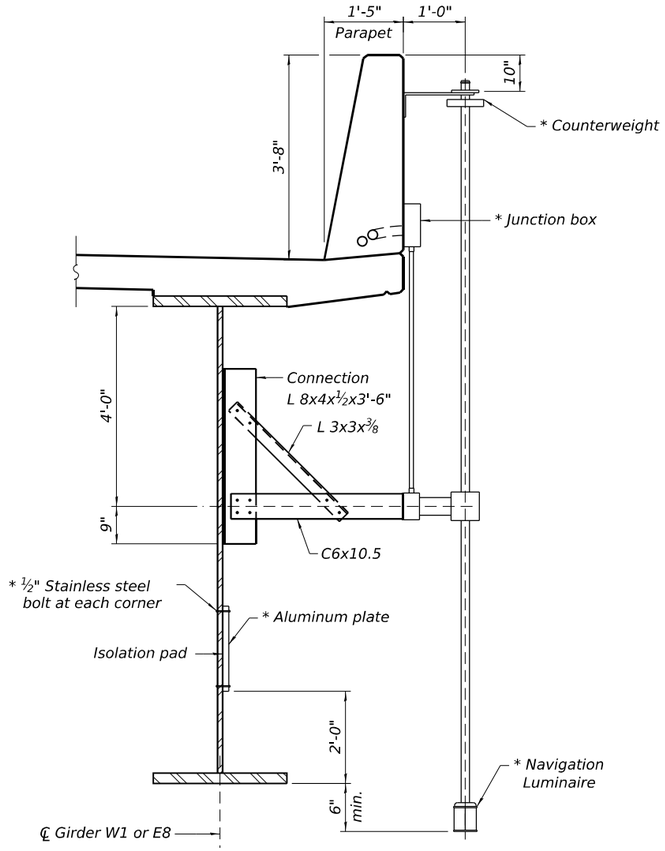


## NAVIGATION LIGHT SUPPORT DETAIL

(No. support required = 6, see Framing Plan for locations)

* Navigation lights to be part of the future electrical plans in Contract 62R23

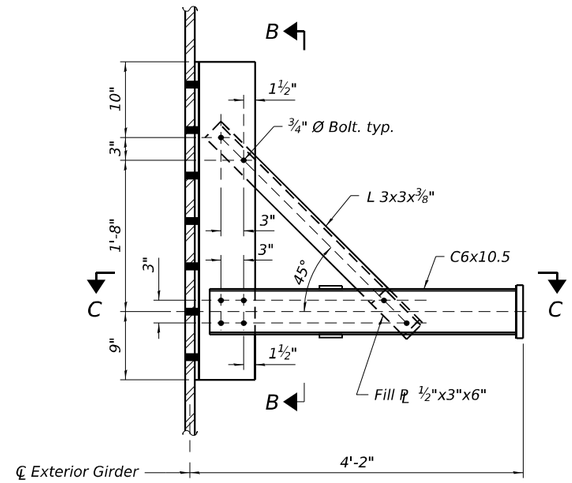


## MOUNTING BRACKET DETAIL

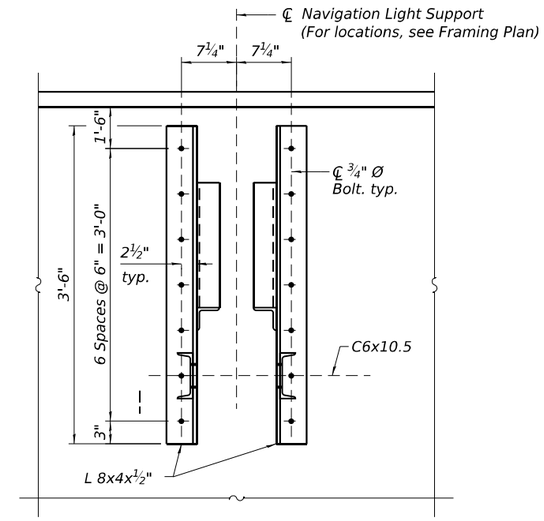


## VIEW B-B

(Showing connection angle)

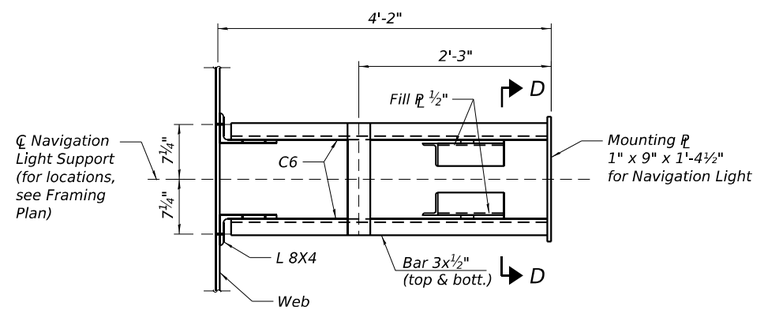


## VIEW C-C

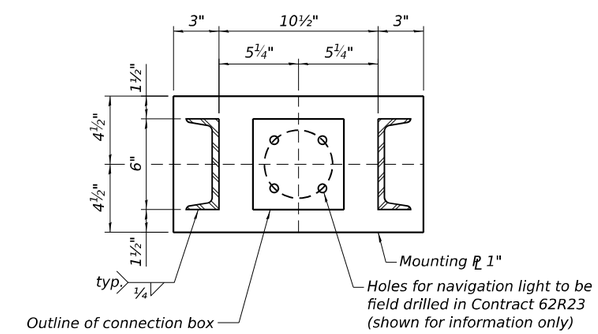


## SECTION D-D

## NOTES:

1. Cost of mounting bracket included with Furnishing Structural Steel, Lump Sum.
2. All plates and shapes for mounting bracket shall be AASHTO M270 Grade 50W.
3. All bolted navigation light support connections shall be ¾" ∅ bolts in 15/16" ∅ holes.
4. Cost of all connection plates attached to the parapet to be included in the Navigation Light pay item to be part of the future electrical plans in Contract 62R23.

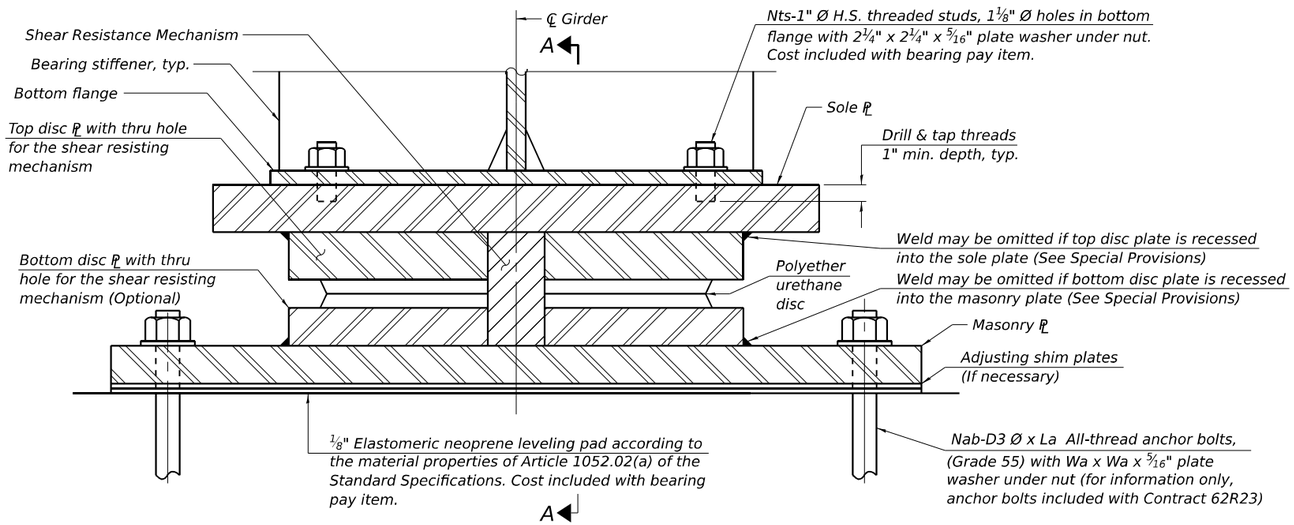


## SECTION THRU BEARING

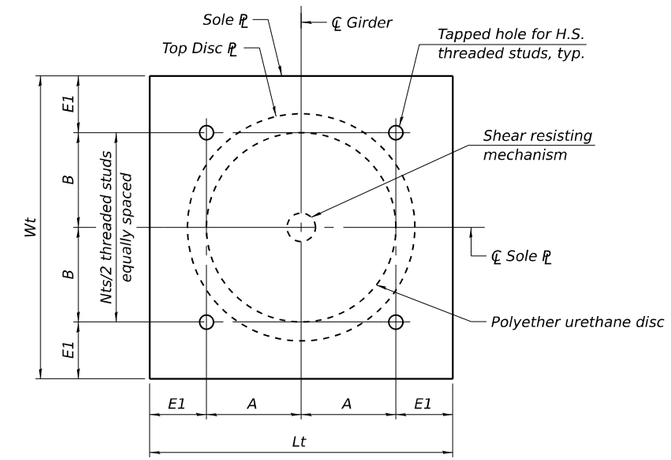


## SOLE PLATE AND TOP DISC PLATE PLAN

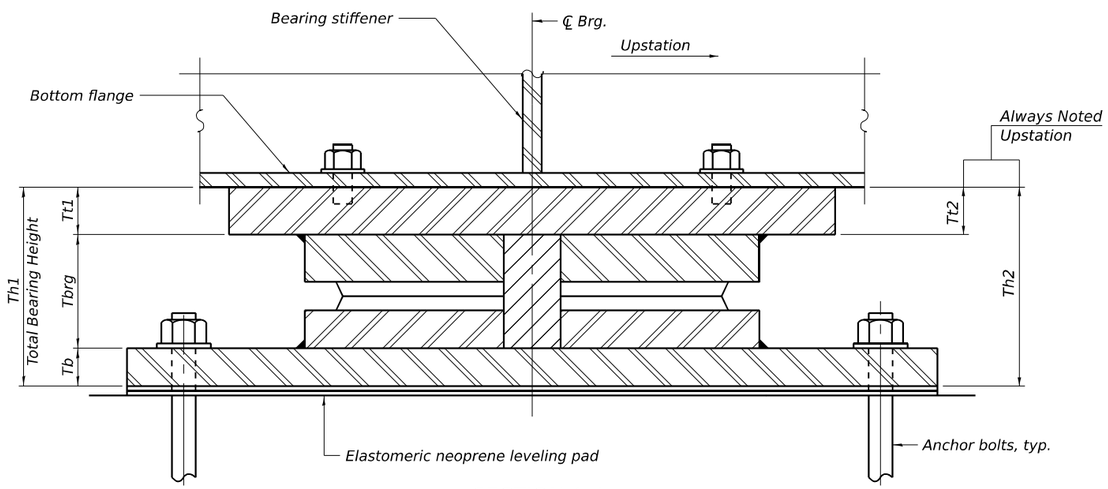


## SECTION A-A

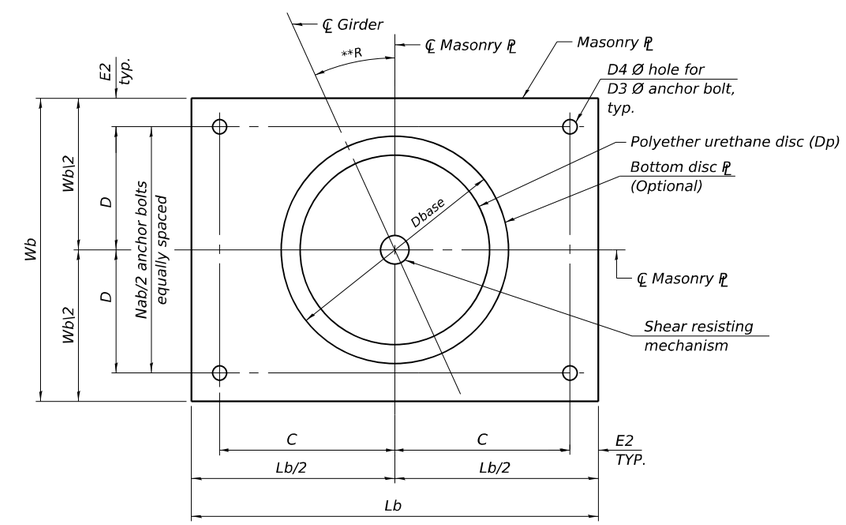


## MASONRY PLATE AND BOTTOM DISC PLATE PLAN

**R = 0° for Pier 4, see table on this sheet for angles at other locations

## MASONRY PLATE ROTATION - PIER 1 ONLY

| Westbound | | Eastbound | |
|---|---|---|---|
| Location | Rotation Angle R | Location | Rotation Angle R |
| Girder W1 | 20° 26' 34" | Girder E1 | 23° 30' 00" |
| Girder W2 | 20° 48' 57" | Girder E2 | 23° 30' 00" |
| Girder W3 | 21° 10' 47" | Girder E3 | 23° 30' 00" |
| Girder W4 | 21° 32' 06" | Girder E4 | 23° 30' 00" |
| Girder W5 | 21° 52' 55" | Girder E5 | 23° 30' 00" |
| Girder W6 | 22° 13' 15" | Girder E6 | 23° 30' 00" |
| Girder W7 | 22° 33' 06" | Girder E7 | 23° 30' 00" |
| Girder W8 | 22° 52' 31" | Girder E8 | 23° 30' 00" |
| Girder W9 | 23° 11' 28" | | |
| Girder W10 | 23° 30' 00" | | |

## NOTES:

1. Two ⅛ in. adjusting shims shall be provided for each bearing in addition to all other plates or shims and placed as shown on bearing details. Shim plates not included in total bearing height. Cost included with bearing pay item.

2. Total bearing height is estimated based on manufacturer data. Actual bearing height may differ from contract plans. The Contractor shall be responsible for verifying bearing heights and adjusting seat elevations, if required, prior to placing pier or abutment concrete.

3. See sheet S-87 for Fixed Bearing Dimensions Table and Design Data.

## BILL OF MATERIAL

| | Item | Unit | Total |
|---|---|---|---|
| * | Furnishing High Load Multi-Rotational Bearings, Disc, Fixed- 900K | Each | 18 |
| * | Furnishing High Load Multi-Rotational Bearings, Disc, Fixed- 1500K | Each | 16 |

* The value specified in the pay item name is an approximate vertical load capacity that is used for letting and bidding purposes only. Exact bearing capacity will vary subject to final design.

WSP USA Inc.
30 N. LASALLE STREET
SUITE 4200
CHICAGO, IL 60602
TEL: (312) 782-8150
FAX: (312) 782-1684

| | | | |
|---|---|---|---|
| USER NAME = USSJ696614 | DESIGNED - TB | REVISED - | |
| | CHECKED - PJL | REVISED - | |
| PLOT SCALE = 0:2.0000 ':" / in. | DRAWN - TB | REVISED - | |
| PLOT DATE = 12/4/2024 | CHECKED - PJL | REVISED - | |

**STATE OF ILLINOIS**
**DEPARTMENT OF TRANSPORTATION**

**FIXED HLMR DISC BEARING DETAILS**
**STRUCTURE NUMBER 099-8309 WB AND 099-8325 EB**

SHEET S-84 OF S-87 SHEETS

| F.A.I RTE. | SECTION | COUNTY | TOTAL SHEETS | SHEET NO. |
|---|---|---|---|---|
| I-80 | (99-3DEFP) HF 23 | WILL | 89 | 86 |
| | | CONTRACT NO. 62W52 | | |
| | ILLINOIS | FED. AID PROJECT | | |

MODEL: Default
FILE NAME: pw://transystems-pw.bentley.com:transyscorp-pw1-hosted/Documents/Projects_2018/CH401/401180022/03-WSP/CAD/62W52/SF-3/Sheets/0998309-62W52-S084-BRG01.dgn

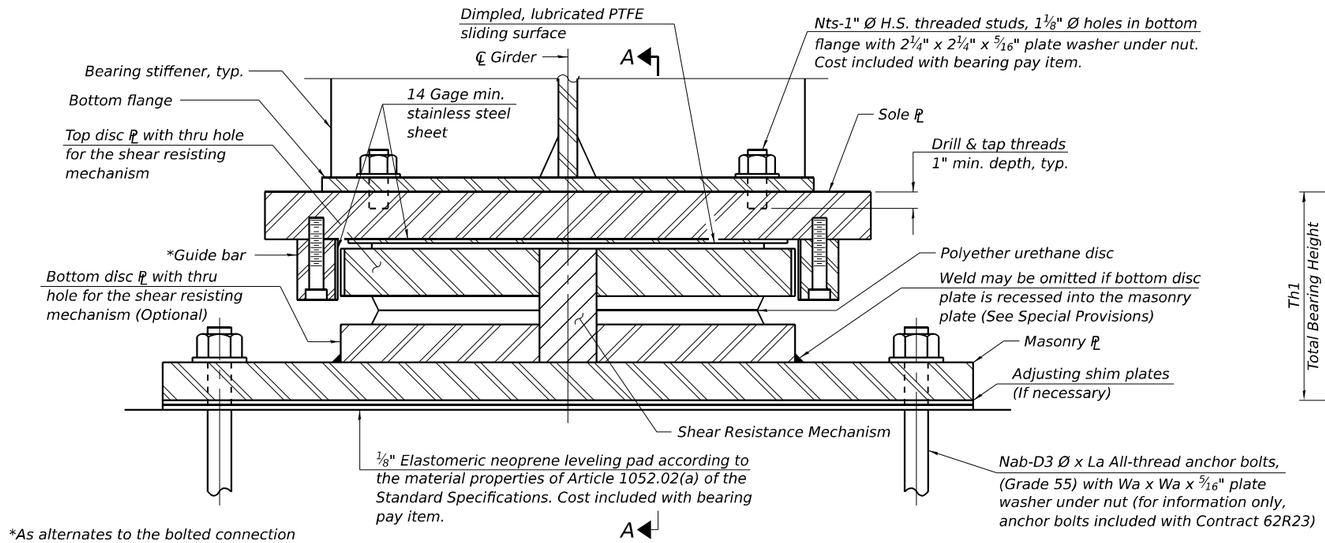


*As alternates to the bolted connection shown, the guide bars may be connected to the sole plate by groove welds or the guide bars and sole plate may be fabricated as a single piece.

## SECTION THRU BEARING

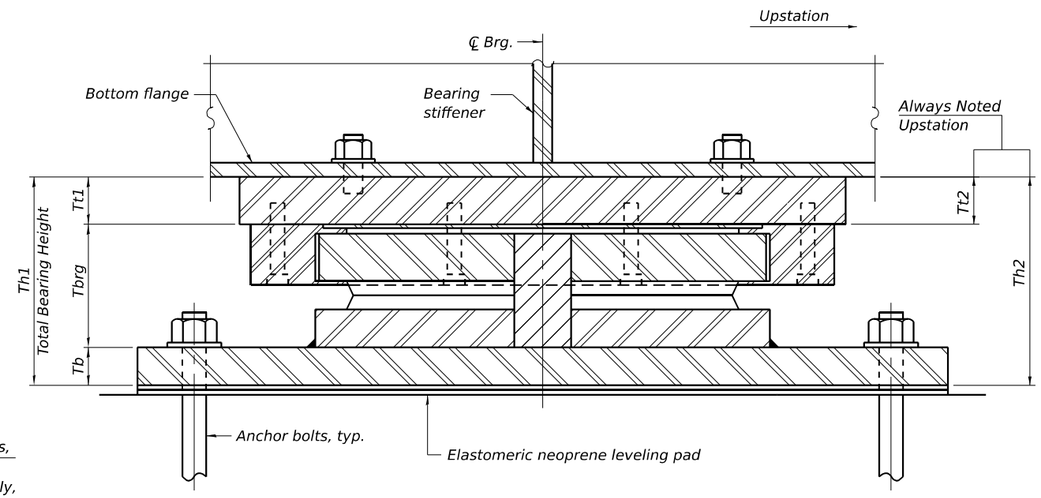


## SECTION A-A

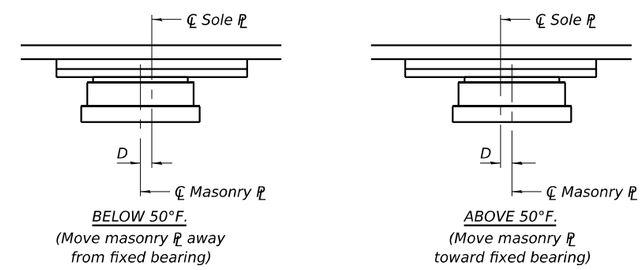


BELOW 50°F.
(Move masonry ℙ away from fixed bearing)

ABOVE 50°F.
(Move masonry ℙ toward fixed bearing)

## SETTING ANCHOR BOLTS AT EXPANSION BEARING

D=⅛" per each 100' of expansion for every 15° temp. change from the normal temp. of 50° F.

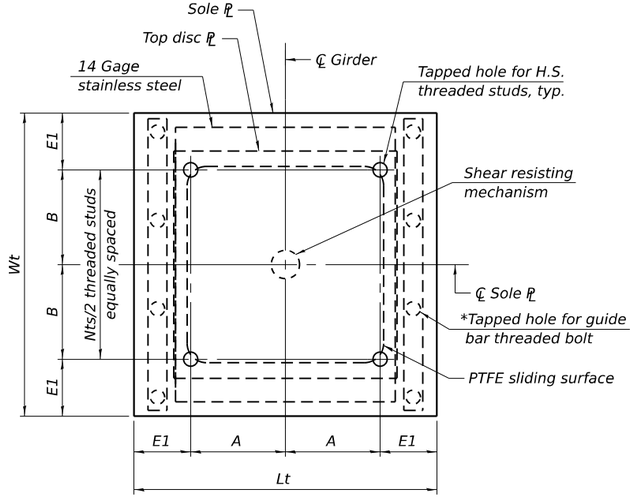


## SOLE PLATE AND TOP DISC PLATE PLAN

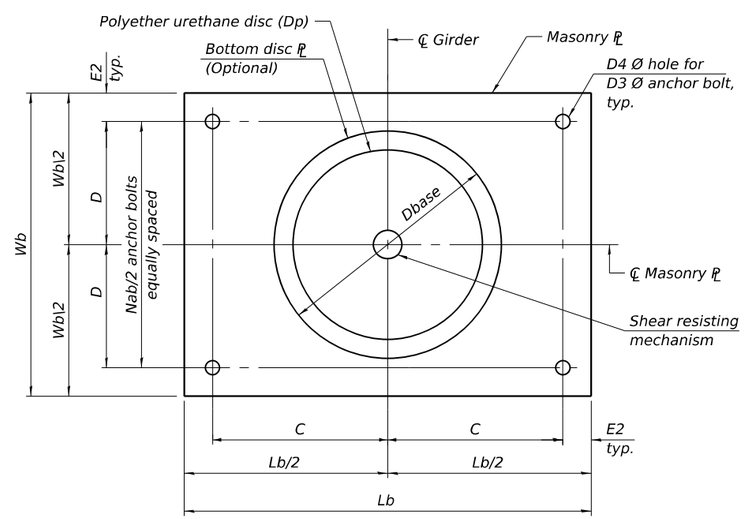


## MASONRY PLATE AND BOTTOM DISC PLATE PLAN

## BILL OF MATERIAL

| | Item | Unit | Total |
|---|---|---|---|
| ** | Furnishing High Load Multi-Rotational Bearings, Disc, Guided Expansion-300K | Each | 34 |
| ** | Furnishing High Load Multi-Rotational Bearings, Disc, Guided Expansion-500K | Each | 32 |
| ** | Furnishing High Load Multi-Rotational Bearings, Disc, Guided Expansion-1500K | Each | 16 |

** The value specified in the pay item name is an approximate vertical load capacity that is used for letting and bidding purposes only. Exact bearing capacity will vary subject to final design.

## NOTES:

1. Two ⅛ in. adjusting shims shall be provided for each bearing in addition to all other plates or shims and placed as shown on bearing details. Shim plates not included in total bearing height. Cost included with bearing pay item.

2. Total bearing height is estimated based on manufacturer data. Actual bearing height may differ from contract plans. The Contractor shall be responsible for verifying bearing heights and adjusting seat elevations, if required, prior to placing pier or abutment concrete.

3. See sheet S-87 for Guided Expansion Bearing Dimensions Table and Design Data.

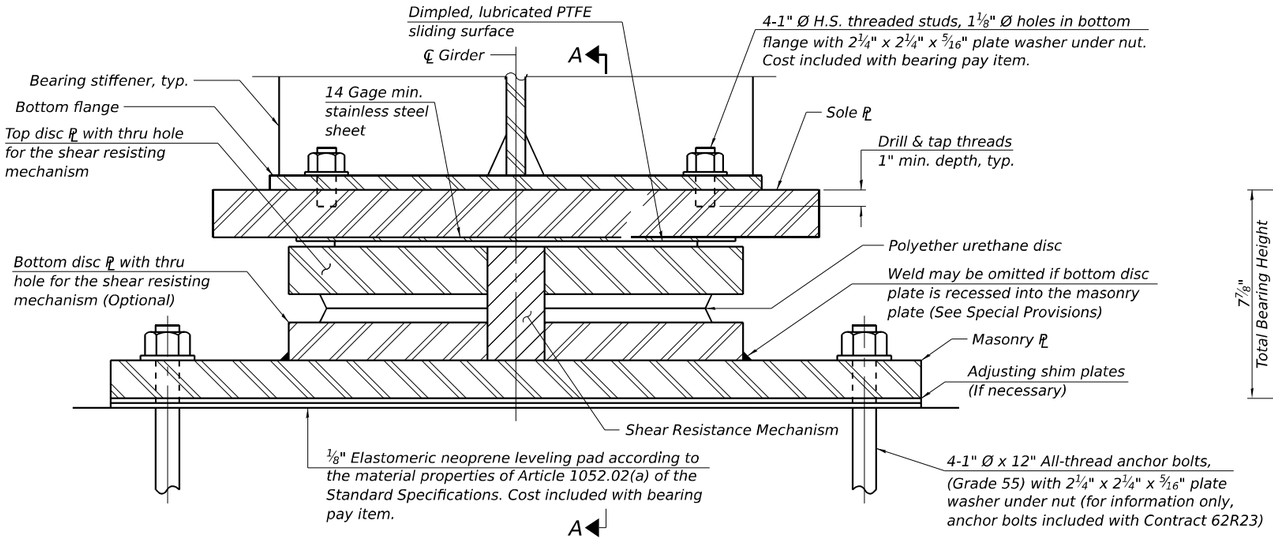


## SECTION THRU BEARING

(Girder W1 & W10 at W. Abut. WB)

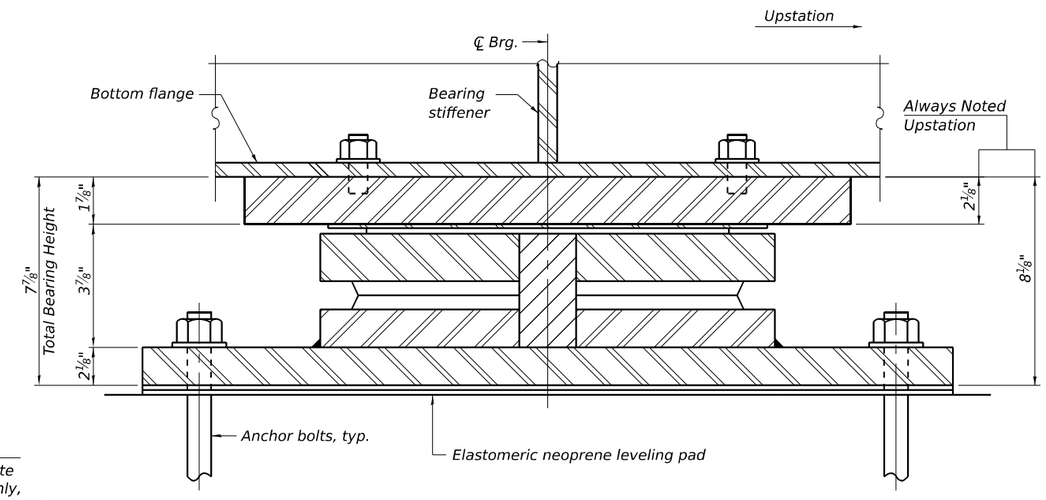


## SECTION A-A

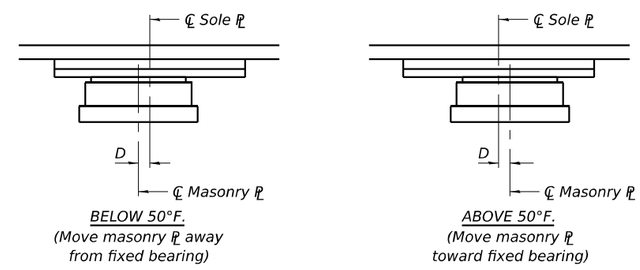


BELOW 50°F.
(Move masonry PL away from fixed bearing)

ABOVE 50°F.
(Move masonry PL toward fixed bearing)

## SETTING ANCHOR BOLTS AT EXPANSION BEARING

D=⅛" per each 100' of expansion for every 15° temp. change from the normal temp. of 50° F.

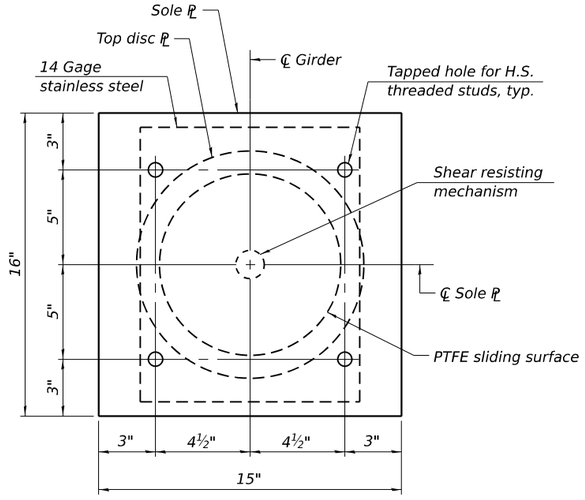


## SOLE PLATE AND TOP DISC PLATE PLAN

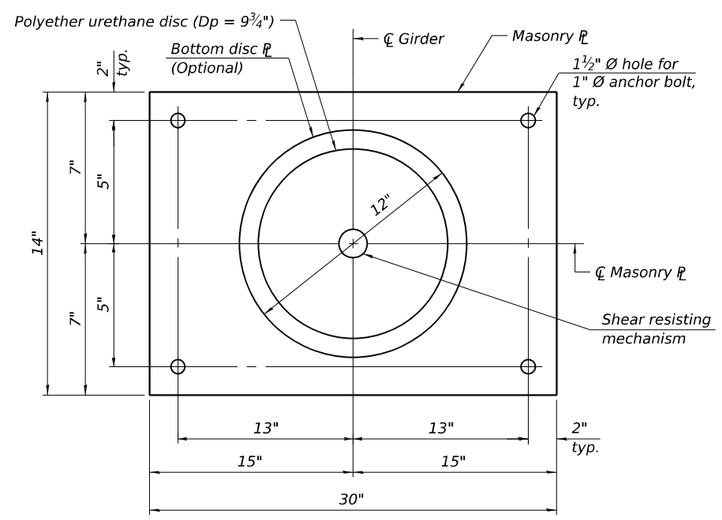


## MASONRY PLATE AND BOTTOM DISC PLATE PLAN

## BILL OF MATERIAL

| | Item | Unit | Total |
|---|---|---|---|
| * | Furnishing High Load Multi-Rotational Bearings, Disc, Non-Guided Expansion-300k | Each | 2 |

* The value specified in the pay item name is an approximate vertical load capacity that is used for letting and bidding purposes only. Exact bearing capacity will vary subject to final design.

## NOTES:

1. Two ⅛ in. adjusting shims shall be provided for each bearing in addition to all other plates or shims and placed as shown on bearing details. Shim plates not included in total bearing height. Cost included with bearing pay item.

2. Total bearing height is estimated based on manufacturer data. Actual bearing height may differ from contract plans. The Contractor shall be responsible for verifying bearing heights and adjusting seat elevations, if required, prior to placing pier or abutment concrete.

3. See sheet S-87 for Design Data.

HLMR-D-NGE 5/15/2023

WSP USA Inc.
30 N. LASALLE STREET
SUITE 4200
CHICAGO, IL 60602
TEL: (312) 782-8150
FAX: (312) 782-1684

| | | | |
|---|---|---|---|
| USER NAME = USCP702533 | DESIGNED - TB | REVISED - | |
| | CHECKED - PJL | REVISED - | |
| PLOT SCALE = 0:2.0000 ':" / in. | DRAWN - TB | REVISED - | |
| PLOT DATE = 10/11/2024 | CHECKED - PJL | REVISED - | |

STATE OF ILLINOIS
DEPARTMENT OF TRANSPORTATION

NON-GUIDED EXP. HLMR DISC BEARING DETAILS
STRUCTURE NUMBER 099-8309 WB AND 099-8325 EB

SHEET S-86 OF S-87 SHEETS

| F.A.I RTE. | SECTION | COUNTY | TOTAL SHEETS | SHEET NO. |
|---|---|---|---|---|
| I-80 | (99-3DEFP) HF 23 | WILL | 89 | 88 |

CONTRACT NO. 62W52

ILLINOIS FED. AID PROJECT

MODEL: Default
FILE NAME: pw://transystems-pw.bentley.com:transyscorp-pw1-hosted/Documents/Projects_2018/CH401/401180022/03-WSP/CAD/62W52-SF-3/Sheets/0998309-62W52-S086-BRG03.dgn

## DESIGN DATA - FIXED

| | Unit | Pier 1 WB | Pier 1 EB | Pier 4 |
|---|---|---|---|---|
| Unfactored Vertical Dead Load Reaction (RDC) | kips | 385 | 424 | 862 |
| Unfactored Vertical Wearing Surface Reaction (RDW) | kips | 97 | 109 | 163 |
| Unfactored Vertical Live Load without Impact Reaction (RLL) | kips | 243 | 263 | 286 |
| Maximum Strength or Extreme Event Lateral Reaction (Hu) | kips | 96 | 107 | 205 |
| Maximum Strength Limit State Rotation (Θu according to Article 14.4.2.2) | rad | 0.0159 | 0.0127 | 0.0151 |
| Service I Factored Lateral Reaction | kips | 14 | 14 | 120 |
| Service I Rotation | rad | 0.0089 | 0.0058 | 0.0065 |
| Service I Factored Vertical Reaction | kips | 724 | 796 | 1312 |
| Strength I Factored Vertical Reaction | kips | 1104 | 1212 | 1915 |

## DESIGN DATA - GUIDED EXPANSION

| | Unit | W. Abut. WB Girders W2-W9 | W. Abut. EB | W. Brg. Pier 2 WB | W. Brg. Pier 2 EB | E. Brg. Pier 2 WB | E. Brg. Pier 2 EB | Pier 3 | Pier 5 WB | Pier 5 EB |
|---|---|---|---|---|---|---|---|---|---|---|
| Unfactored Vertical Dead Load Reaction (RDC) | kips | 103 | 102 | 100 | 116 | 202 | 200 | 862 | 200 | 200 |
| Unfactored Vertical Wearing Surface Reaction (RDW) | kips | 29 | 28 | 26 | 32 | 46 | 45 | 163 | 45 | 45 |
| Unfactored Vertical Live Load without Impact Reaction (RLL) | kips | 118 | 119 | 103 | 122 | 145 | 127 | 286 | 127 | 127 |
| Maximum Strength or Extreme Event Lateral Reaction (Hu) | kips | 26 | 26 | 25 | 30 | 50 | 49 | 205 | 49 | 49 |
| Maximum Strength Limit State Rotation (Θu according to Article 14.4.2.2) | rad | 0.0130 | 0.0136 | 0.0201 | 0.0219 | 0.0155 | 0.0155 | 0.0161 | 0.0155 | 0.0155 |
| Unfactored Design Thermal Movement from 50° F (ΔT) | in. | 2.00 | 2.13 | 4.13 | 3.75 | 7.88 | 7.88 | 4.63 | 6.50 | 7.38 |
| Service I Factored Lateral Reaction | kips | 2 | 2 | 2 | 2 | 6 | 6 | 12 | 6 | 6 |
| Service I Rotation | rad | 0.0049 | 0.0052 | 0.0116 | 0.0131 | 0.0062 | 0.0062 | 0.0074 | 0.0062 | 0.0062 |
| Strength I Factored Longitudinal Movement | in. | 2.38 | 2.50 | 5.00 | 4.50 | 9.38 | 9.38 | 5.50 | 7.75 | 8.88 |
| Service I Factored Vertical Reaction | kips | 251 | 249 | 228 | 270 | 393 | 371 | 1312 | 371 | 371 |
| Strength I Factored Vertical Reaction | kips | 399 | 397 | 360 | 427 | 603 | 565 | 1915 | 565 | 565 |

## DESIGN DATA - NON-GUIDED EXPANSION

| | Unit | W. Abut. WB Girders W1 & W10 |
|---|---|---|
| Unfactored Vertical Dead Load Reaction (RDC) | kips | 98 |
| Unfactored Vertical Wearing Surface Reaction (RDW) | kips | 29 |
| Unfactored Vertical Live Load without Impact Reaction (RLL) | kips | 119 |
| Maximum Strength or Extreme Event Lateral Reaction (Hu) | kips | 25 |
| Maximum Strength Limit State Rotation (Θu according to Article 14.4.2.2) | rad | 0.0133 |
| Unfactored Design Thermal Movement from 50° F (ΔT) | in. | 2.00 |
| Transverse Movement | in. | 0.29 |
| Service I Factored Lateral Reaction | kips | 2 |
| Service I Rotation | rad | 0.0050 |
| Strength I Factored Longitudinal Movement | in. | 2.38 |
| Service I Factored Vertical Reaction | kips | 245 |
| Strength I Factored Vertical Reaction | kips | 392 |

## NOTE:

* For information only, anchor bolts included with Contract 62R23

## FIXED BEARING DIMENSIONS TABLE

| Location | Quantity | Bearing Dimensions | | | | | | Sole Plate | | | | | | | Masonry Plate | | | | | | * Anchor Bolts | | | | | | Threaded Studs |
|---|---|---|---|---|---|---|---|---|---|---|---|---|---|---|---|---|---|---|---|---|---|---|---|---|---|---|---|
| | | Size | Dp (IN) | Dbase (IN) | Tbrg (IN) | Th1 (IN) | Th2 (IN) | Lt (IN) | Wt (IN) | Tt1 (IN) | Tt2 (IN) | E1 (IN) | A (IN) | B (IN) | Lb (IN) | Wb (IN) | Tb (IN) | E2 (IN) | C (IN) | D (IN) | Grade | Nab | D3 (IN) | D4 (IN) | La (IN) | Wa (IN) | Nts |
| Pier 1 WB | 10 | 900K | 16 3/4 | 18 1/4 | 5 | 11 3/4 | 12 | 21 1/4 | 22 1/4 | 3 1/8 | 3 3/8 | 3 | 7 5/8 | 8 1/8 | 45 1/4 | 20 1/4 | 3 5/8 | 2 | 20 5/8 | 8 1/8 | F1554 Gr. 55 | 4 | 1 1/2 | 2 | 18 | 3 | 6 |
| Pier 1 EB | 8 | 900K | 16 3/4 | 18 1/4 | 5 | 12 1/8 | 12 1/2 | 21 1/4 | 22 1/4 | 3 1/4 | 3 5/8 | 3 | 7 5/8 | 8 1/8 | 45 1/4 | 20 1/4 | 3 7/8 | 2 | 20 5/8 | 8 1/8 | F1554 Gr. 55 | 4 | 1 1/2 | 2 | 18 | 3 | 6 |
| Pier 4 WB & EB | 16 | 1500K | 21 1/2 | 24 1/2 | 6 7/16 | 13 11/16 | 13 3/16 | 27 1/2 | 28 1/2 | 4 5/8 | 4 1/8 | 3 | 10 3/4 | 11 1/4 | 40 | 26 1/2 | 2 5/8 | 2 | 18 | 11 1/4 | F1554 Gr. 55 | 6 | 1 1/2 | 2 | 18 | 3 | 10 |

## GUIDED EXPANSION BEARING DIMENSIONS TABLE

| Location | Quantity | Bearing Dimensions | | | | | | Sole Plate | | | | | | | Masonry Plate | | | | | | * Anchor Bolts | | | | | | Threaded Studs |
|---|---|---|---|---|---|---|---|---|---|---|---|---|---|---|---|---|---|---|---|---|---|---|---|---|---|---|---|
| | | Size | Dp (IN) | Dbase (IN) | Tbrg (IN) | Th1 (IN) | Th2 (IN) | Lt (IN) | Wt (IN) | Tt1 (IN) | Tt2 (IN) | E1 (IN) | A (IN) | B (IN) | Lb (IN) | Wb (IN) | Tb (IN) | E2 (IN) | C (IN) | D (IN) | Grade | Nab | D3 (IN) | D4 (IN) | La (IN) | Wa (IN) | Nts |
| W. Abut. WB Girders W2-W9 | 8 | 300K | 9 3/4 | 10 3/4 | 3 7/8 | 8 | 8 1/4 | 16 3/8 | 17 3/8 | 1 5/8 | 1 7/8 | 3 | 5 3/16 | 5 11/16 | 30 | 12 3/4 | 2 1/2 | 2 | 13 | 4 3/8 | F1554 Gr. 55 | 4 | 1 | 1 1/2 | 12 | 2 1/4 | 4 |
| W. Abut. EB | 8 | 300K | 9 3/4 | 10 3/4 | 3 7/8 | 8 | 8 3/8 | 16 3/8 | 17 3/8 | 1 5/8 | 2 | 3 | 5 3/16 | 5 11/16 | 30 | 12 3/4 | 2 1/2 | 2 | 13 | 4 3/8 | F1554 Gr. 55 | 4 | 1 | 1 1/2 | 12 | 2 1/4 | 4 |
| W. Brg. Pier 2 WB | 10 | 300K | 9 3/4 | 10 3/4 | 3 7/8 | 7 7/8 | 8 | 16 3/8 | 17 3/8 | 1 5/8 | 1 3/4 | 3 | 5 3/16 | 5 11/16 | 30 | 12 3/4 | 2 3/8 | 2 | 13 | 4 3/8 | F1554 Gr. 55 | 4 | 1 | 1 1/2 | 12 | 2 1/4 | 4 |
| W. Brg. Pier 2 EB | 8 | 300K | 9 3/4 | 10 3/4 | 3 7/8 | 8 3/8 | 8 1/2 | 16 3/8 | 17 3/8 | 1 3/4 | 1 7/8 | 3 | 5 3/16 | 5 11/16 | 32 | 12 3/4 | 2 3/4 | 2 | 14 | 4 3/8 | F1554 Gr. 55 | 4 | 1 | 1 1/2 | 12 | 2 1/4 | 4 |
| E. Brg. Pier 2 WB | 8 | 500K | 12 1/2 | 13 1/2 | 4 7/8 | 9 7/8 | 10 | 19 1/8 | 20 1/8 | 2 1/8 | 2 1/4 | 3 | 6 9/16 | 7 1/16 | 36 | 15 1/2 | 2 7/8 | 2 | 16 | 5 3/4 | F1554 Gr. 55 | 4 | 1 | 1 1/2 | 12 | 2 1/4 | 4 |
| E. Brg. Pier 2 EB | 8 | 500K | 12 1/2 | 13 1/2 | 4 7/8 | 9 3/4 | 9 7/8 | 19 1/8 | 20 1/8 | 2 | 2 1/8 | 3 | 6 9/16 | 7 1/16 | 36 | 15 1/2 | 2 7/8 | 2 | 16 | 5 3/4 | F1554 Gr. 55 | 4 | 1 | 1 1/2 | 12 | 2 1/4 | 4 |
| Pier 3 WB & EB | 16 | 1500K | 21 1/2 | 24 1/2 | 6 9/16 | 13 1/16 | 13 1/16 | 30 1/8 | 31 1/8 | 3 7/8 | 3 7/8 | 3 | 12 1/16 | 12 9/16 | 40 | 26 1/2 | 2 5/8 | 2 | 18 | 11 1/4 | F1554 Gr. 55 | 6 | 1 1/2 | 2 | 18 | 3 | 10 |
| W. Brg. Pier 5 WB | 8 | 500K | 12 1/2 | 13 1/2 | 4 7/8 | 10 1/4 | 9 3/4 | 19 1/8 | 20 1/8 | 2 1/2 | 2 | 3 | 6 9/16 | 7 1/16 | 36 | 15 1/2 | 2 7/8 | 2 | 16 | 5 3/4 | F1554 Gr. 55 | 4 | 1 | 1 1/2 | 12 | 2 1/4 | 4 |
| W. Brg. Pier 5 EB | 8 | 500K | 12 1/2 | 13 1/2 | 4 7/8 | 10 1/4 | 9 3/4 | 19 1/8 | 20 1/8 | 2 1/2 | 2 | 3 | 6 9/16 | 7 1/16 | 36 | 15 1/2 | 2 7/8 | 2 | 16 | 5 3/4 | F1554 Gr. 55 | 4 | 1 | 1 1/2 | 12 | 2 1/4 | 4 |