F.A.P RTE.	SECTION	COUNTY	TOTAL SHEETS	SHEET NO.
587	(140B) BRR	BUREAU	37	1
	ILLINOIS	CONTRACT NO. 66P34		

01-17-2025 LETTING ITEM 008

STATE OF ILLINOIS
DEPARTMENT OF TRANSPORTATION

PROPOSED HIGHWAY PLANS

FAP ROUTE 587 (IL 92)
SECTION (140B)BRR
BRIDGE REPAIR
BUREAU COUNTY

INDEX OF SHEETS

DRAWINGS	INDEX
1	COVER SHEET
2	GENERAL NOTES, HIGHWAY STANDARDS
3-6	SUMMARY OF QUANTITIES
7-9	SCHEDULES OF QUANTITIES
10	EXISTING AND PROPOSED TYPICAL SECTION
11	WIDTH RESTRICTION SIGNING DETAIL
12	MAINTENANCE OF TRAFFIC TYPICAL SECTIONS
13-14	PRE-STAGE PLAN
15-16	MAINTENANCE OF TRAFFIC STAGE I
17-18	MAINTENANCE OF TRAFFIC STAGE II
19	TEMPORARY SIGNING DETAIL

STRUCTURE NO. 006-0101, IL 92
OVER BRANCH OF MASTERS CREEK
0.7 MI WEST OF VAN ORIN

BEGIN IMPROVEMENT
STA. 620 + 39.92

END IMPROVEMENT
STA. 630 + 23.71

C-93-085-24

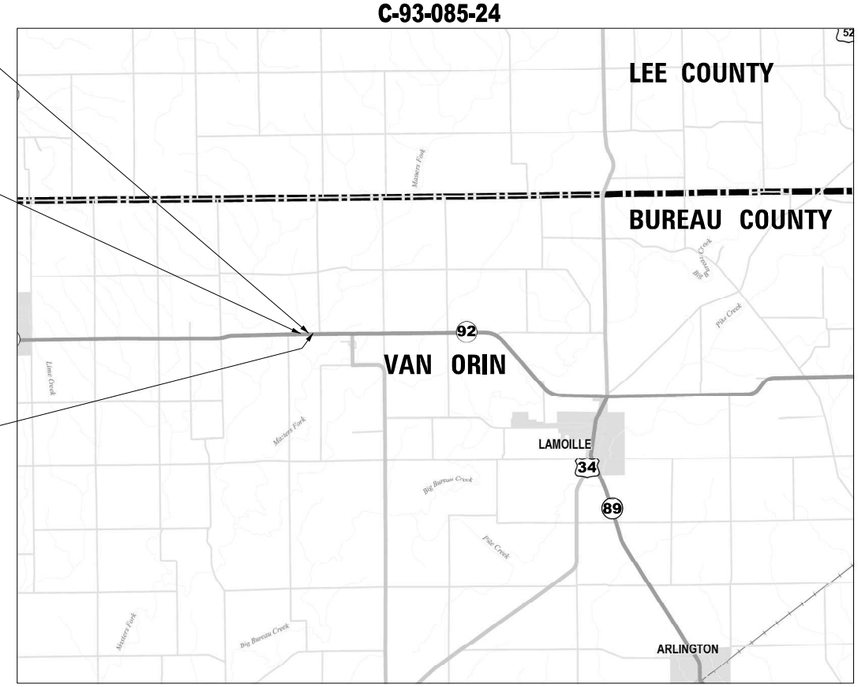

N
N.T.S.

D-93-048-24

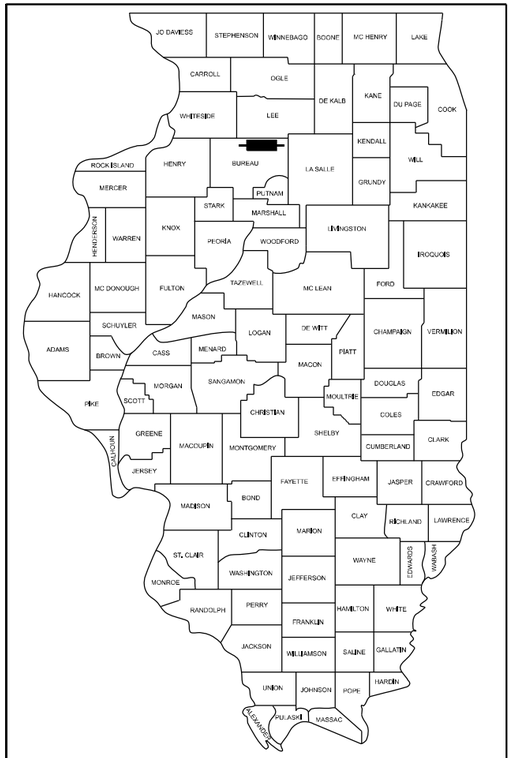

LOCATION OF SECTION INDICATED THUS: -

FUNCTIONAL CLASSIFICATION
OTHER PRINCIPAL ARTERIAL
F.A.P ROUTE 587 (IL 92)
2023 ADT = 750
PV = 87% SU = 5% MU = 8%

FOR LIST OF HIGHWAY STANDARDS, SEE SHEET NO. 2

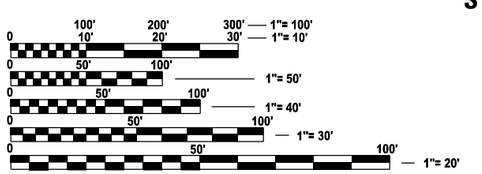

FULL SIZE PLANS HAVE BEEN PREPARED USING STANDARD ENGINEERING SCALES. REDUCED SIZED PLANS WILL NOT CONFORM TO STANDARD SCALES. IN MAKING MEASUREMENTS ON REDUCED PLANS, THE ABOVE SCALES MAY BE USED.

J.U.L.I.E.
JOINT UTILITY LOCATION INFORMATION FOR EXCAVATION
1-800-892-0123
OR 811

GROSS LENGTH = 763.72 FT. = 0.1446 MILE
NET LENGTH = 763.72 FT. = 0.1446 MILE

STATE OF ILLINOIS
DEPARTMENT OF TRANSPORTATION

SUBMITTED October 22, 2024
Trisha Thompson
MAS REGIONAL ENGINEER

December 6, 2024
ENGINEER OF DESIGN AND ENVIRONMENT

December 6, 2024
DIRECTOR OF HIGHWAYS PROJECT IMPLEMENTATION

DESIGN SECTION ENGINEER

AMES Engineering, Inc.
CONSULTING ENGINEERS
6330 Belmont Road, Suite 4B
Downers Grove, IL 60516

JOSEPH A. REGIS 062-047290 — DATE 07/31/2024 — EXPIRES 11/30/2025

SIGNATURE AND SEAL APPLY TO DRAWINGS: 01-13

PROJECT ENGINEER: JUNIOR SENAT
UNIT CHIEF : RON WOODSHANK
DISTRICT 3 NO. (815)434-8449
CONTRACT NO. 66P34

AMES Engineering, Inc.
CONSULTING ENGINEERS
6330 Belmont Road, Suite 4B
Downers Grove, IL 60516

PRINTED BY THE AUTHORITY OF THE STATE OF ILLINOIS

GENERAL NOTES

1. THE ENGINEER WILL BE THE SOLE JUDGE CONCERNING CURING TIME FOR THE VARIOUS HMA LIFTS.

2. ALL EXCAVATED MATERIAL, WHICH INCLUDES DIGGING OR GRADING OF ANY SOIL OR FILL MATERIAL, WITH THE EXCEPTION OF AGGREGATE FILLS. MUST BE INCORPORATED WITHIN THE IDOT RIGHT OF WAY.

3. THE FOLLOWING RATES OF APPLICATION HAVE BEEN USED IN CALCULATING PLAN QUANTITES:
   HMA RESURFACING 112 LBS/ SQ YD/ IN

4. UNDER NO CIRCUMSTANCES SHOULD ANY CONSTRUCTION ACTIVITY TAKE PLACE WITHIN THE RIVER CHANNEL, RIVERBANKS, OR ANY ADJACENT WATER BODIES. THIS INCLUDES EXCAVATION, GRADING, OR ANY OTHER WORK THAT COULD DISTURB THE NATURAL HABITAT.

5. THE CONTRACTOR SHALL AVOID DAMAGING THE EXISTING GUARDRAIL THAT IS TO REMAIN IN PLACE.

6. NO ROADWAY PLANS ARE PROVIDED FOR STANDARD 420406. SEE THE SCHEDULE FOR IMPROVED SUBGRADE.

7. MEMBERS OF JULIE KNOWN TO BE WITHIN THE LIMITS OF THE IMPROVEMENTS ARE:
   AMEREN
   FRONTIER
   METRO COMMUNICATIONS
   NICOR

HIGHWAY STANDARDS

000001-08 STANDARD SYMBOLS, ABBREVIATIONS, AND PATTERNS
001001-02 AREAS OF REINFORCEMENT BARS
001006 DECIMAL OF AN INCH AND OF A FOOT
420406 PAVEMENT CONNECTOR (HMA) FOR BRIDGE APPROACH SLAB
482006-03 HMA SHOULDER ADJACENT TO RIGID PAVEMENT
630001-13 STEEL PLATE BEAM GUARDRAIL
631031-18 TRAFFIC BARRIER TERMINAL, TYPE 6
635001-02 DELINEATORS
701001-02 OFF-RD OPERATIONS, 2L, 2W, MORE THAN 15' (4.5 m) AWAY
701006-05 OFF-RD OPERATIONS, 2L, 2W, 15' (4.5m) TO 24" (600mm) FROM PAVEMENT EDGE
701011-04 OFF-RD MOVING OPERATIONS 2L, 2W, DAY ONLY
701201-05 LANE CLOSURE, 2L 2W, DAY ONLY, FOR SPEEDS ≥ 45 MPH
701301-04 LANE CLOSURE 2L, 2W, SHORT TIME OPERATIONS
701306-04 LANE CLOSURE, 2L, 2W, SLOW MOVING OPERATIONS DAY ONLY, FOR SPEEDS ≥ 45 MPH
701311-03 LANE CLOSURE 2L,2W MOVING OPERATIONS-DAY ONLY
701321-19 LANE CLOSURE, 2L, 2W, BRIDGE REPAIR WITH BARRIER
701326-04 LANE CLOSURE 2L, 2W, PAVEMENT WIDENING FOR SPEEDS ≥ 45MPH
701901-10 TRAFFIC CONTROL DEVICES
704001-08 TEMPORARY CONCRETE BARRIER
780001-05 TYPICAL PAVEMENT MARKINGS
782006-01 GUARDRAIL AND BARRIER WALL REFLECTOR MOUNTING DETAILS

DISTRICT 3 STANDARDS

780-8 PAVEMENT MARKING - TWO LANE ROADWAY

COMMITMENTS

THE ENGINEER SHALL RECORD THE DECK SLAB REPAIR LOCATION, PATCH SIZE AND QUANTITIES ON THE DECK SLAB REPAIR "AS BUILT" PLAN DETAILS. WHEN RECORDED, THE ENGINEER SHALL FORWARD THE DECK SLAB REPAIR "AS BUILT" PLAN OF DETAILS TO THE BRIDGE OFFICE IN A TIMELY MANNER. BRIDGE OFFICE CONTACT PERSON IS ADRIAN HALLOWAY. PHONE (217) 524-8624. E-MAIL: adrian.halloway@illinois.gov
THE ENGINEER SHALL NOTIFY THE DEPARTMENTS DESIGN AND PLANNING SECTION WHEN THE "AS BUILT" DECK SLAB REPAIR PLAN HAS BEEN TO THE BRIDGE OFFICE. CONTACT PERSON IS JUNIOR SENAT. PHONE (815) 434-8449
E-MAIL: junior.senat@illinois.gov

HOT-MIX ASPHALT REQUIREMENTS				
LOCATIONS	EAST AND WEST OF S.S. 006-0101		AT BRIDGE APPROACH SLABS FOR S.N. 006-0101	
	9" HMA SHOULDERS		PAVEMEN CONNECTOR (HMA) FOR BRIDGE APPROACH SLAB	
	HMA BINDER	HMA SURFACE	HMA BINDER	HMA SURFACE
MIXTURE USE	BOTTOM LIFTS	TOP LIFT	BOTTOM LIFTS	TOP LIFTS
BINDER GAPE (PG)	PG 64-22	PG 64-22	PG 64-22	PG 64-22
DESIGN AIR VOIDS	4.0% @ N50	4.0% @ N50	4.0% @ N50	4.0% @ N50
MIXTURE COMPOSITION	IL 19.0	IL 9.5	IL 19.0	IL 9.5
FRICTION AGGREGATE	N/A	MIXTURE "C"	N/A	MIXTURE "D"
MIXTURE WEIGHT	112.0 LB/SQ YD/IN	112.0 LB/SQ YD/IN	112.0 LB/SQ YD/IN	112.0 LB/SQ YD/IN
QUALITY MANAGEMENT PROGRAM	QCQA	QCQA	QCQA	QCQA
SUBLOT SIZE	N/A	N/A	N/A	N/A
DENSITY TEST METHOD	CORE/NUCLEAR	CORE/NUCLEAR	CORE/NULEAR	CORE/NULEAR
MATERIAL TRANSFER DEVICE (REQUIRED)	NO	NO	NO	NO

STATE OF ILLINOIS
DEPARTMENT OF TRANSPORTATION
DISTRICT THREE
AS BUILT INFORMATION

SUPERVISING CONTRUCTION FIELD ENGINEER

RESIDENT ENGINEER / TECHNICIAN

START & END DATES OF CONTRUCTION:

INSPECTORS:

MODEL: Index Of sheet [Sheet]
FILE NAME: F:\Projects\1084 - Phase II - Kuhn and Trello\WO 4\Design\Shtl\D366P34-sht-Index.dgn

AMES Engineering, Inc.
CONSULTING ENGINEERS
6330 Belmont Road, Suite 4B
Downers Grove, IL 60516

USER NAME = sgurmani	DESIGNED - MAA,SAG	REVISED -	
	DRAWN - MAA,SAG	REVISED -	
PLOT SCALE = 0.16666633 ' / in.	CHECKED - JAR	REVISED -	
PLOT DATE = 10/11/2024	DATE - 9/06/2024	REVISED -	

STATE OF ILLINOIS
DEPARTMENT OF TRANSPORTATION

GENERAL NOTE, HIGHWAY STANDARDS
COMMITMENTS, AND HOT-MIX ASPHALT TABLE

SCALE: 1"=20' | SHEET 1 OF 1 SHEETS | STA. TO STA.

F.A. RTE.	SECTION	COUNTY	TOTAL SHEETS	SHEET NO.
587	(140B)BRR	BUREAU	37	2

CONTRACT NO. 66934

ILLINOIS | FED. AID PROJECT

SUMMARY OF QUANTITIES

CONSTR. CODE
100% STATE
BRIDGE
0047
S.N. 006-0101

Code No.	Item	Unit	Total Quantity	
20200600	EXCAVATING AND GRADING EXISTING SHOULDER	UNIT	5	5
35101400	AGGREGATE BASE COURSE, TYPE B	TON	12	12
40800029	BITUMINOUS MATERIALS (TACK COAT)	LBS	33	33
42000070	PAVEMENT CONNECTOR (HMA) FOR BRIDGE APPROACH SLAB	SQ YD	72	72
44000100	PAVEMENT REMOVAL	SQ YD	58	58
44004250	PAVED SHOULDER REMOVAL	SQ YD	14	14
48203033	HOT-MIX ASPHALT SHOULDERS, 9"	SQ YD	160	160
50102400	CONCRETE REMOVAL	CU YD	9.8	9.8
50300225	CONCRETE STRUCTURES	CU YD	14.8	14.8
50300255	CONCRETE SUPERSTRUCTURE	CU YD	9.8	9.8
50300300	PROTECTIVE COAT	SQ YD	190	190
50301350	CONCRETE SUPERSTRUCTURE (APPROACH SLAB)	CU YD	66.7	66.7
50800205	REINFORCEMENT BARS, EPOXY COATED	POUND	27650	27650

SUMMARY OF QUANTITIES

CONSTR. CODE
100% STATE
BRIDGE
0047
S.N. 006-0101

Code No.	Item	Unit	Total Quantity	
50800515	BAR SPLICERS	EACH	318	318
52000110	PREFORMED JOINT STRIP SEAL	FOOT	68	68
67000400	ENGINEER'S FIELD OFFICE, TYPE A	CAL MO	6	6
67100100	MOBILIZATION	L SUM	1	1
70100405	TRAFFIC CONTROL AND PROTECTION, STANDARD 701321	EACH	1	1
70100450	TRAFFIC CONTROL AND PROTECTION, STANDARD 701201	L SUM	1	1
70100460	TRAFFIC CONTROL AND PROTECTION, STANDARD 701306	L SUM	1	1
70100500	TRAFFIC CONTROL AND PROTECTION, STANDARD 701326	L SUM	1	1
70106500	TEMPORARY BRIDGE TRAFFIC SIGNALS	EACH	1	1
70300100	SHORT TERM PAVEMENT MARKING	FOOT	200	200
70300150	SHORT TERM PAVEMENT MARKING REMOVAL	SQ FT	67	67
70400100	TEMPORARY CONCRETE BARRIER	FOOT	237.5	237.5
70400200	RELOCATE TEMPORARY CONCRETE BARRIER	FOOT	237.5	237.5
70600251	IMPACT ATTENUATORS, TEMPORARY (NON-REDIRECTIVE, NARROW) TEST LEVEL 3	EACH	2	2

SUMMARY OF QUANTITIES

CONSTR. CODE
100% STATE
BRIDGE
0047
S.N. 006-0101

	Code No.	Item	Unit	Total Quantity	
	70600352	IMPACT ATTENUATORS, RELOCATE (NON-REDIRECTIVE, NARROW) TEST LEVEL 3	EACH	2	2
*	78009004	MODIFIED URETHANE PAVEMENT MARKING- LINE 4",FOOT	FOOT	3055	3055
*	78009006	MODIFIED URETHANE PAVEMENT MARKING- LINE 6" ,FOOT	FOOT	382	382
*	78200006	GUARDRAIL REFLECTORS, TYPE B	EACH	34	34
*	78200011	BARRIER WALL REFLECTORS, TYPE C	EACH	22	22
	78300202	PAVEMENT MARKING REMOVAL - WATER BLASTING	SQ FT	907	907
	X6350204	LINEAR DELINEATOR PANELS, 4 INCH	EACH	2	2
	X6350206	LINEAR DELINEATOR PANELS, 6 INCH	EACH	6	6
	X7010118	TEMPORARY RUMBLE STRIPS (SPECIAL)	EACH	12	12
	X7200201	WIDTH RESTRICTION SIGNING	L SUM	1	1
	Z0004552	APPROACH SLAB REMOVAL	SQ YD	107	107
	Z0005900	BRIDGE CURB OR HUBGUARD REPAIR	FOOT	15	15
	Z0016002	DECK SLAB REPAIR (FULL DEPTH, TYPE II)	SQ YD	2	2
	Z0016200	DECK SLAB REPAIR (PARTIAL)	SQ YD	3	3

*= SPECIALTY ITEM

SUMMARY OF QUANTITIES

CONSTR. CODE
100% STATE
BRIDGE
0047
S.N. 006-0101

Code No.	Item	Unit	Total Quantity	
Z0030850	TEMPORARY INFORMATION SIGNING	SQ FT	42	42

TEMPORARY CONCRETE BARRIER SCHEDULE

STATION TO STATION	TEMPORARY CONCRETE BARRIER	RELOCATE TEMPORARY CONCRETE BARRIER	IMPACT ATTENUATORS, TEMPORARY (NON-REDIRECTIVE, NARROW) TEST LEVEL 3	IMPACT ATTENUATORS, RELOCATE (NON-REDIRECTIVE, NARROW) TEST LEVEL 3
	FOOT	FOOT	EACH	EACH
STAGE I	237.5		2	
STAGE II		237.5		2
TOTALS	237.5	237.5	2	2

PAVEMENT MARKING SCHEDULE

LOCATION					
STATION TO STATION	SHORT TERM PAVEMENT MARKING	SHORT TERM PAVEMENT MARKING REMOVAL	MODIFIED URETHANE PAVEMENT MARKING LINE 4"	MODIFIED URETHANE PAVEMENT MARKING LINE 6"	PAVEMENT MARKING REMOVAL WATER-BLASTING
	FOOT	SQ FT	FOOT		SQ FT
STAGE- I	100	33			454
STAGE- II	100	33			453
FIRST APPLICATION			1528	191	
SECOND APPLICATION			1528	191	
FINAL			3055	382	
TOTALS	200	66	3055	382	907

SHOULDER SCHEDULE

LOCATION		
STATION TO STATION	EXCAVATING AND GRADING EXISTING SHOULDER	HOT-MIX ASPHALT SHOULDERS,9"
	UNIT	SQ YD
PRE-STAGE	5	160
TOTALS	5	160

LINEAR DELINEATOR PANEL SCHEDULE

LOCATION				
STATION TO STATION	SIDE	STRUCTURE	LINEAR DELINEATOR PANELS, 4"	LINEAR DELINEATOR PANELS, 6"
		EACH	EACH	EACH
626+33.00	RT	006-0101		1
626+85.39	RT	006-0101		1
626+32.99	LT	006-0101		1
626+85.28	LT	006-0101		1
ALLOWANCE			2	2
TOTALS			2	6

MODEL: Default
FILE NAME: F:\Projects\1084 - Phase II - Kuhn and Trello\WO 4\Design\Dgn\D368P34-Border.dgn

AMES Engineering, Inc.
CONSULTING ENGINEERS
6330 Belmont Road, Suite 4B
Downers Grove, IL 60516

USER NAME = sgurmani	DESIGNED - MAA, SAG	REVISED -	
	DRAWN - MAA, SAG	REVISED -	
PLOT SCALE = 40.000 ' / in.	CHECKED - JAR	REVISED -	
PLOT DATE = 10/8/2024	DATE - 9/6/2024	REVISED -	

STATE OF ILLINOIS
DEPARTMENT OF TRANSPORTATION

SCHEDULE OF QUANTITIES
IL-92 OVER BRANCH OF MASTERS CREEK

SCALE: NONE | SHEET 1 OF 1 SHEETS | STA. TO STA.

F.A.P. RTE.	SECTION	COUNTY	TOTAL SHEETS	SHEET NO.
587	(140B)BRR	BUREAU	37	7
		CONTRACT NO. 66P34		
	ILLINOIS	FED. AID PROJECT		

TEMPORARY RUMBLE STRIPS

LOCATION	TEMPORARY RUMBLE STRIPS
	EACH
STAGE - I	6
STAGE - II	6
TOTALS	12

BARRIER WALL REFLECTOR, TYPE C

LOCATION		
STATION TO STATION	STAGE	REFLECTORS
		EACH
625+55.33 TO 627+65.79	MOT 1	11
625+55.31 TO 627+65.77	MOT 2	11
TOTALS		22

PAVEMENT CONNECTOR (HMA) FOR BRIDGE APPROACH SLAB

LOCATION		
STATION TO STATION	STAGE	PAVEMENT CONNECTOR (HMA) FOR BRIDGE APPROACH SLAB
		SQ YD
626+00.78 TO 626+10.78	1	18.89
627+10.30 TO 627+20.30	1	18.89
626+00.78 TO 626+10.78	2	16.67
627+10.30 TO 627+20.30	2	16.67
TOTALS		71.12

GUARDRAIL BARRIER REFLECTOR, TYPE B

LOCATION	
STATION TO STATION	REFLECTORS
	EACH
ALLOWANCE	
624+10.97 TO 626+30.33	10
626+90.79 TO 628+32.84	7
624+90.32 TO 626+30.32	7
626+90.78 TO 629+04.97	10
TOTALS	34

AGGREGATE BASE COURSE, TYPE B

LOCATION		
STATION TO STATION	STAGE	AGGREGATE SHOULDERS, TYPE B
		TON
626+00.78 TO 626+10.78	1	3.06
627+10.30 TO 627+20.30	1	3.06
626+00.78 TO 626+10.78	2	2.70
627+10.30 TO 627+20.30	2	2.70
TOTALS		12

BITUMINOUS MATERIALS (TACK COAT)

LOCATION		
STATION TO STATION	STAGE	BITUMINOUS MATERIALS (TACK COAT)
		LBS
626+00.78 TO 626+10.78	1	8.5
627+10.30 TO 627+20.30	1	8.5
626+00.78 TO 626+10.78	2	7.5
627+10.30 TO 627+20.30	2	7.5
TOTALS		32

PAVEMENT REMOVAL

LOCATION		
STATION TO STATION	STAGE	PAVEMENT REMOVAL
		SQ YD
626+00.78 TO 626+10.78	1	15.56
627+10.30 TO 627+20.30	1	15.56
626+00.78 TO 626+10.78	2	13.33
627+10.30 TO 627+20.30	2	13.33
TOTALS		57.78

PAVED SHOULDER REMOVAL

LOCATION		
STATION TO STATION	STAGE	PAVED SHOULDER REMOVAL
		SQ YD
626+00.78 TO 626+10.78	1	3.34
627+10.30 TO 627+20.30	1	3.34
626+00.78 TO 626+10.78	2	3.34
627+10.30 TO 627+20.30	2	3.34
TOTALS		13.36

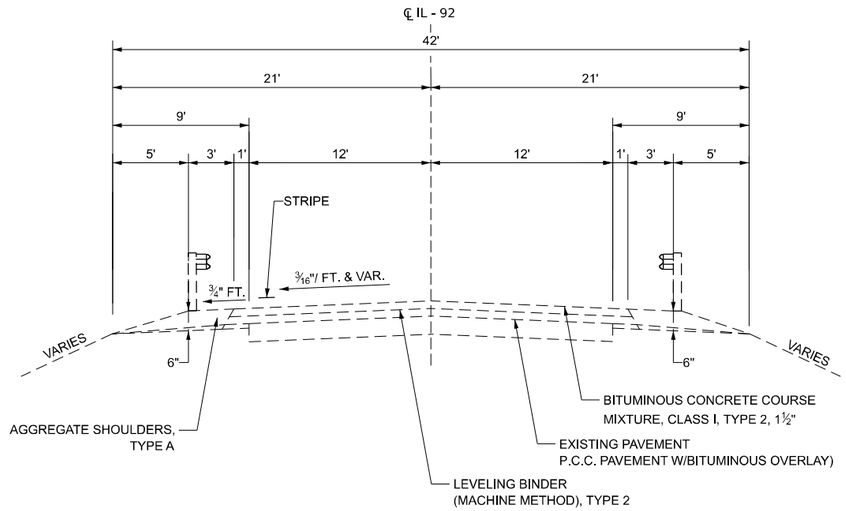

EXISTING TYPICAL SECTION

NOT TO SCALE
620+39.32 TO 630+23.71
BRIDGE OMISSION 626+13.78 TO 627+07.30

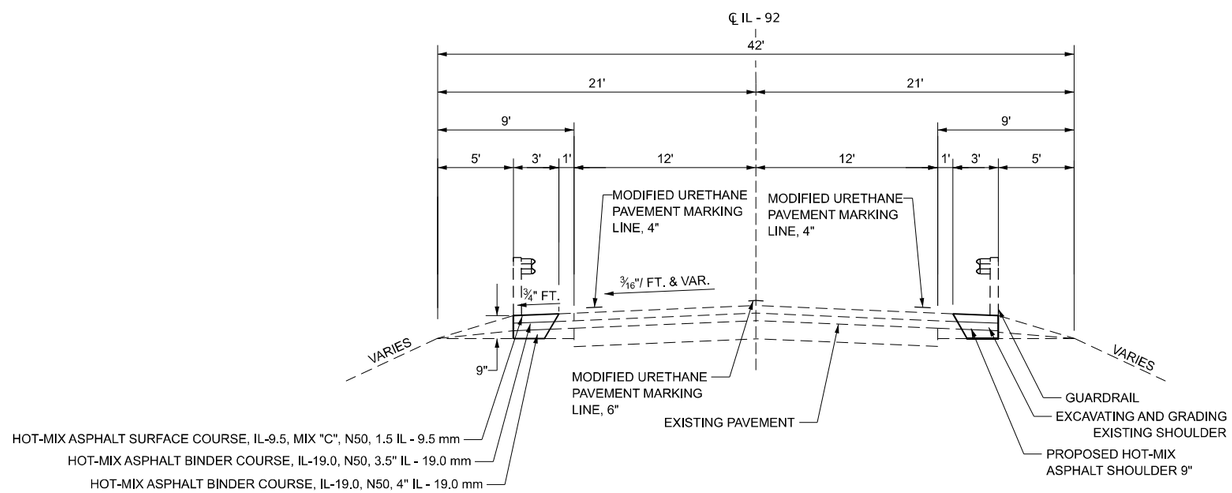

PROPOSED TYPICAL SECTION

NOT TO SCALE
620+39.32 TO 630+23.71
BRIDGE OMISSION 626+13.78 TO 627+07.30

NOTE:

1. EXCAVATION AND GRADING SHOULDER AND PROPOSED HOT- MIX ASPHALT SHOULDERS
624+94.43 TO 626+13.78
627+07.30 TO 628+27.23

MODEL: Default
FILE NAME: F:\Projects\1084 - Phase II - Kuhn and Trello\WO 4\Design\Dgn\D366P34-Border.dgn

AMES Engineering, Inc.
CONSULTING ENGINEERS
6330 Belmont Road, Suite 4B
Downers Grove, IL 60516

USER NAME = sgurmani	DESIGNED - MAA, SAG	REVISED -	
	DRAWN - MAA, SAG	REVISED -	
PLOT SCALE = 19.99996000 ' / in.	CHECKED - JAR	REVISED -	
PLOT DATE = 10/8/2024	DATE - 9/6/2024	REVISED -	

STATE OF ILLINOIS
DEPARTMENT OF TRANSPORTATION

EXISTING AND PROPOSED TYPICAL SECTION

SCALE: NONE | SHEET 1 OF #### SHEETS | STA. | TO STA.

F.A.P. RTE.	SECTION	COUNTY	TOTAL SHEETS	SHEET NO.
587	(140B)BRR	BUREAU	37	10
		CONTRACT NO. 66P34		
	ILLINOIS	FED. AID PROJECT		

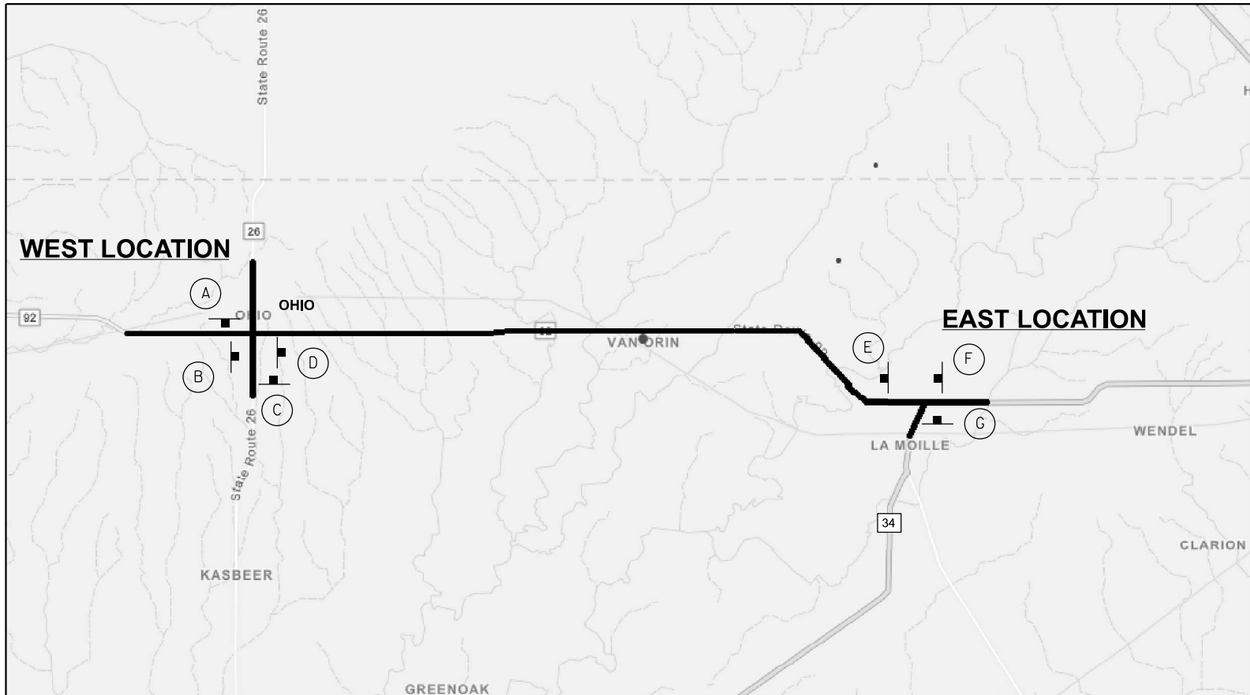

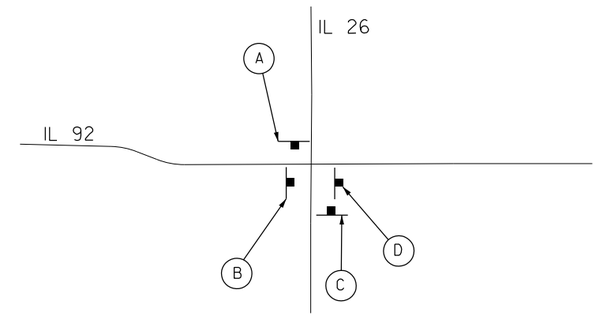

WEST LOCATION

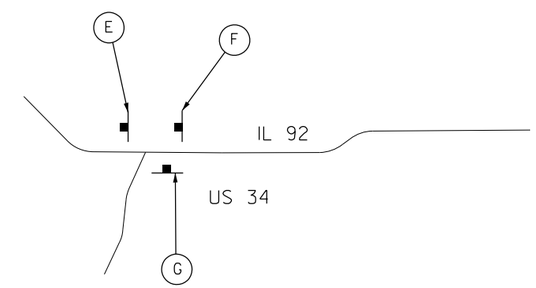

EAST LOCATION

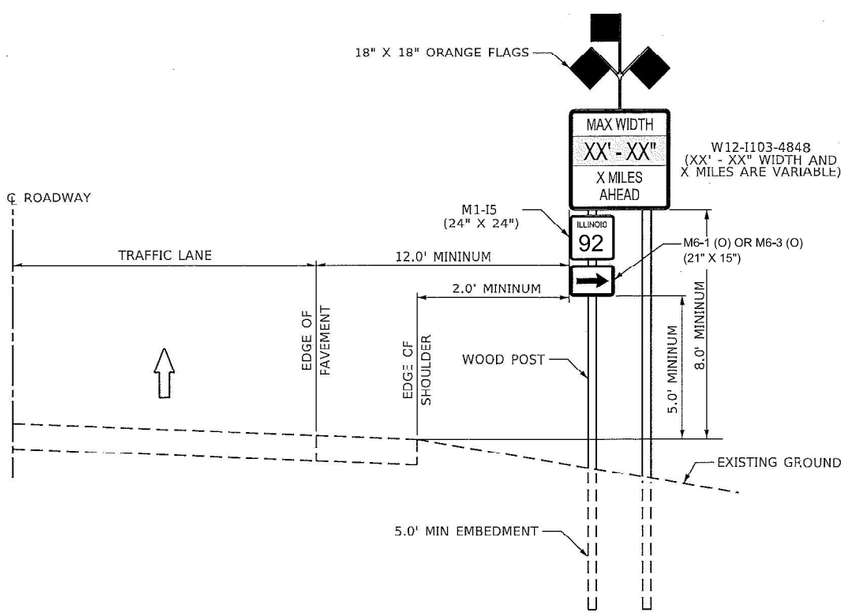

WIDTH RESTRICTION SIGN
CONVENTIONAL ROADWAYS

A	MAX WIDTH 10'5" 4.75 MILES AHEAD ILLINOIS 92 ←
B	MAX WIDTH 10'5" 4.75 MILES AHEAD ILLINOIS 92 ↑
C	MAX WIDTH 10'5" 4.75 MILES AHEAD ILLINOIS 92 →
D	MAX WIDTH 10'5" 4.75 MILES AHEAD ILLINOIS 92 ↑
E	MAX WIDTH 10'5" 5 MILES AHEAD ILLINOIS 92 ↑
F	MAX WIDTH 10'5" 5 MILES AHEAD ILLINOIS 92 ↑
G	MAX WIDTH 10'5" 5 MILES AHEAD ILLINOIS 92 ←

MODEL: Default
FILE NAME: F:\Projects\1084 - Phase II - Kuhn and Trells\WO 4\Design\Dgn\D36P34-Border.dgn

AMES Engineering, Inc.
CONSULTING ENGINEERS
6330 Belmont Road, Suite 4B
Downers Grove, IL 60516

USER NAME = sgurmani	DESIGNED - MAA, SAG	REVISED -	
	DRAWN - MAA, SAG	REVISED -	
PLOT SCALE = 40.000 ' / in.	CHECKED - JAR	REVISED -	
PLOT DATE = 10/8/2024	DATE - 9/6/2024	REVISED -	

STATE OF ILLINOIS
DEPARTMENT OF TRANSPORTATION

WIDTH RESTRICTION SIGNING DETAIL
IL-92 OVER BRANCH OF MASTERS CREEK

SCALE: NONE | SHEET 1 OF 1 SHEETS | STA. TO STA.

F.A.P. RTE.	SECTION	COUNTY	TOTAL SHEETS	SHEET NO.
587	(140B)BRR	BUREAU	37	11
		CONTRACT NO. 66P34		
		ILLINOIS	FED. AID PROJECT	

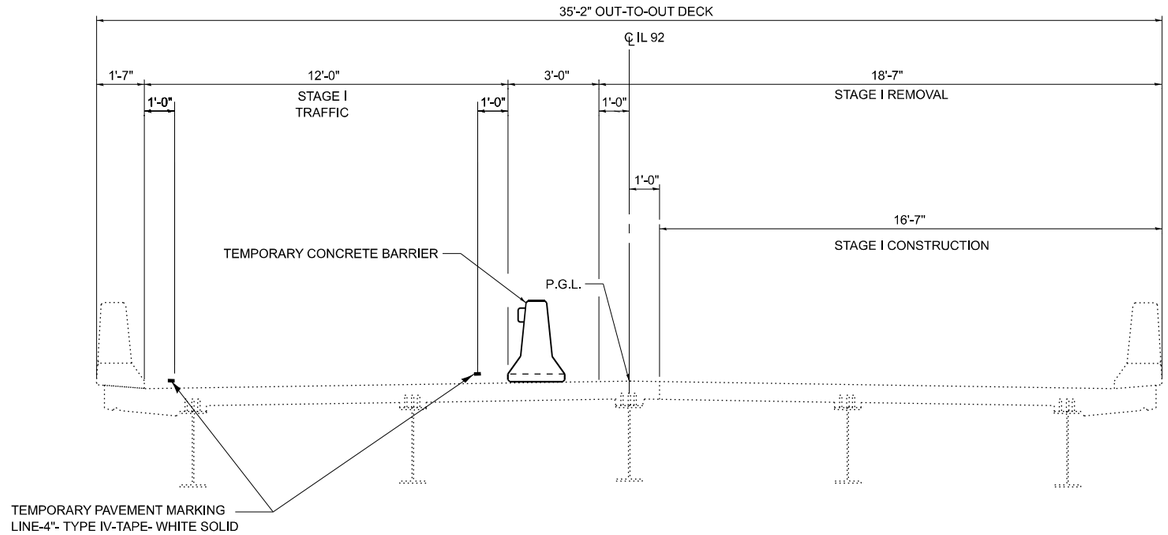

STAGE I CONSTRUCTION

(LOOKING)

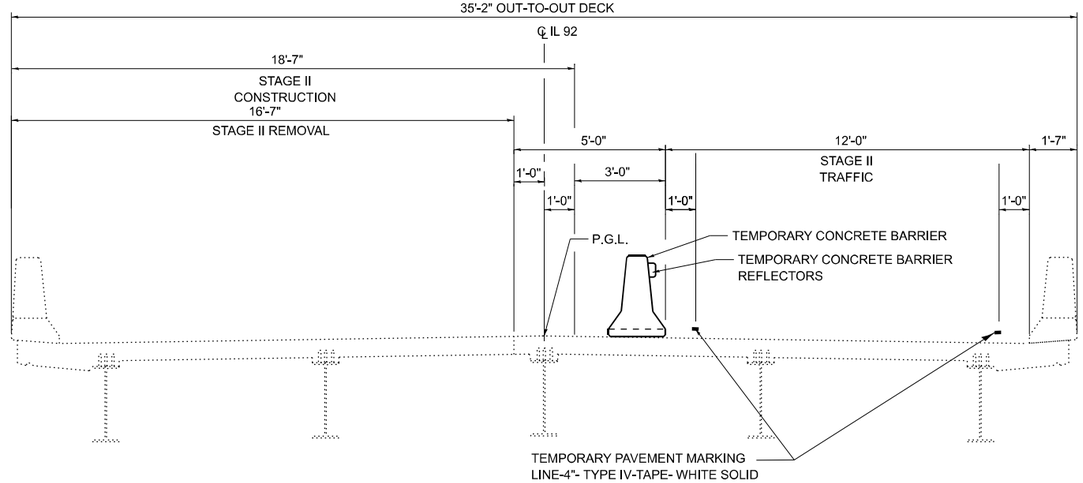

STAGE II CONSTRUCTION

(LOOKING)

LEGEND

MODEL: Default
FILE NAME: F:\Projects\1084 - Phase II - Kuhn and Trello\WO 4\Design\Dgn\D366P34-Border.dgn

AMES Engineering, Inc. CONSULTING ENGINEERS 6330 Belmont Road, Suite 4B Downers Grove, IL 60516	USER NAME = sgurmani	DESIGNED - MAA, SAG	REVISED -	STATE OF ILLINOIS DEPARTMENT OF TRANSPORTATION	MAINTENANCE OF TRAFFIC TYPICAL SECTIONS
		DRAWN - MAA, SAG	REVISED -		
	PLOT SCALE = 0.16666633 ' / in.	CHECKED - JAR	REVISED -		
	PLOT DATE = 10/8/2024	DATE - 9/6/2024	REVISED -		SCALE: SHEET OF SHEETS STA. TO STA.

F.A.P. RTE.	SECTION	COUNTY	TOTAL SHEETS	SHEET NO.
587	(140B)BRR	BUREAU	37	12
		CONTRACT NO. 66P34		
		ILLINOIS	FED. AID PROJECT	

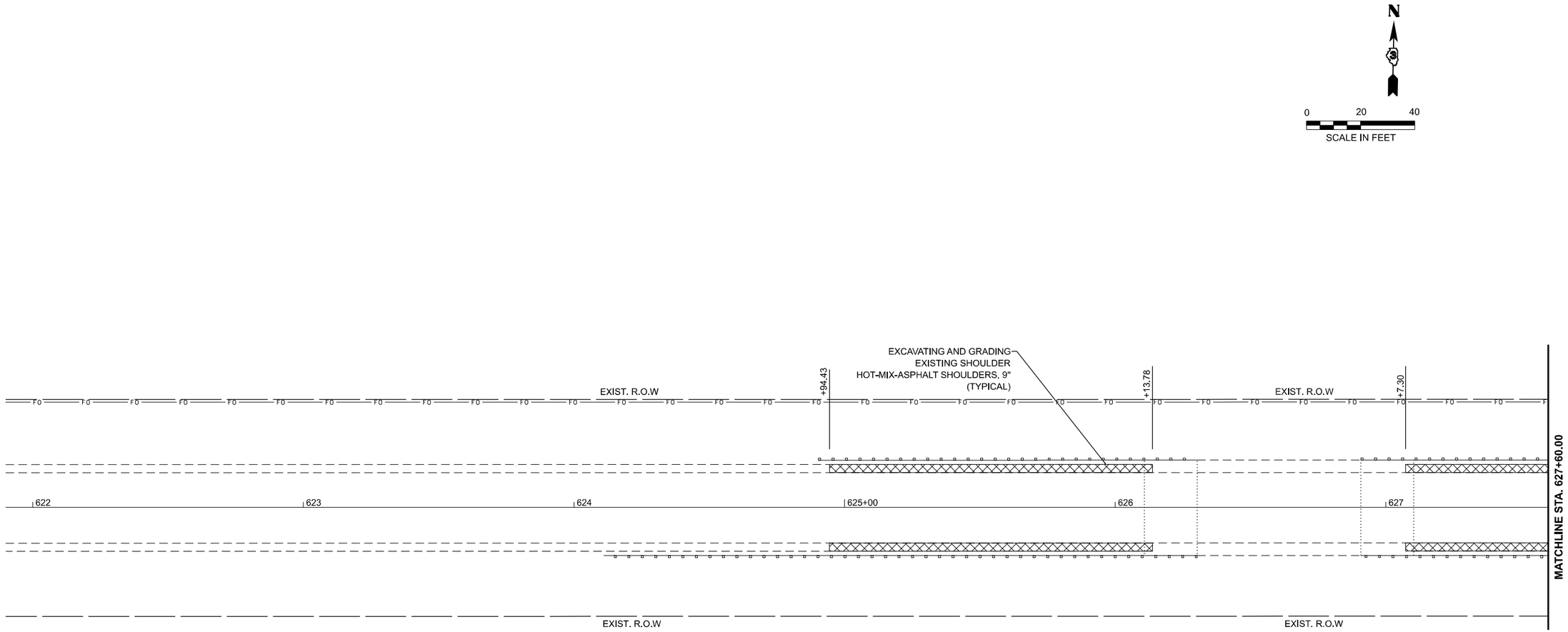

MODEL: Default
FILE NAME: F:\Projects\1084 - Phase II - Kuhn and Trello\WO 4\Design\Dgn\D386P34-Border.dgn

AMES Engineering, Inc.
CONSULTING ENGINEERS
6330 Belmont Road, Suite 4B
Downers Grove, IL 60516

USER NAME = sgurmani	DESIGNED - MAA, SAG	REVISED -	
	DRAWN - MAA, SAG	REVISED -	
PLOT SCALE = 0.16666633 ' / in.	CHECKED - JAR	REVISED -	
PLOT DATE = 10/8/2024	DATE - 9/6/2024	REVISED -	

STATE OF ILLINOIS
DEPARTMENT OF TRANSPORTATION

PRE-STAGE PLAN
IL-92 OVER BRANCH OF MASTERS CREEK

SCALE: 1"=20' | SHEET 1 OF 2 SHEETS | STA. 621+89.97 TO STA. 627+60.00

F.A.P. RTE.	SECTION	COUNTY	TOTAL SHEETS	SHEET NO.
587	(140B)BRR	BUREAU	37	13
		CONTRACT NO. 66P34		
		ILLINOIS	FED. AID PROJECT	

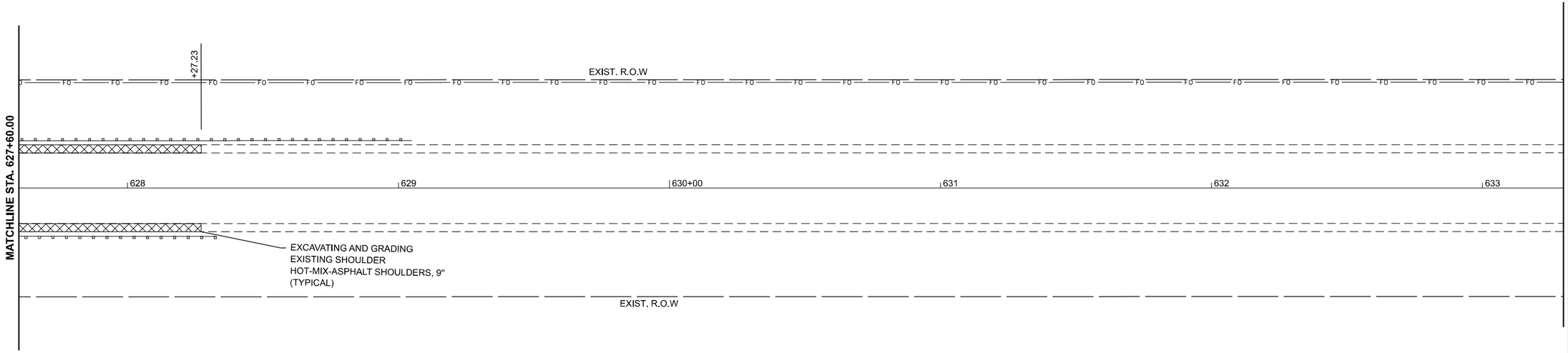

MODEL: Default
FILE NAME: F:\Projects\1084 - Phase II - Kuhn and Trelko\WO 4\Design\Dgn\D366P34-Border.dgn

AMES Engineering, Inc.
CONSULTING ENGINEERS
6330 Belmont Road, Suite 4B
Downers Grove, IL 60516

USER NAME = sgurmani	DESIGNED - MAA, SAG	REVISED -	
	DRAWN - MAA, SAG	REVISED -	
PLOT SCALE = 0.16666633 ' / in.	CHECKED - JAR	REVISED -	
PLOT DATE = 10/8/2024	DATE - 9/6/2024	REVISED -	

STATE OF ILLINOIS
DEPARTMENT OF TRANSPORTATION

PRE-STAGE PLAN
IL-92 OVER BRANCH OF MASTERS CREEK

SCALE: 1"=20' | SHEET 2 OF 2 SHEETS | STA. 627+60.00 TO STA. 633+29.97

F.A.P. RTE.	SECTION	COUNTY	TOTAL SHEETS	SHEET NO.
587	(140B)BRR	BUREAU	37	14
		CONTRACT NO. 66P34		
		ILLINOIS	FED. AID PROJECT	

LEGEND

- DIRECTION OF TRAFFIC FLOW
- DRUM WITH PAVEMENT MARKING WITH WARNING LIGHTS
- TEMPORARY CONCRETE BARRIER
- WORK ZONE
- IMPACT ALTENUATOR, TEMPORARY, (NON-REFLECTIVE, NARROW) TEST LEVEL 3
- SIGN
- TYPE III BARRICADE WITH FLASHING WHEN ARE WORKER NOT PRESENT
- TEMPORARY PAVEMENT MARKING LINE 4" (WHITE)
- SHORT TERM PAVEMENT MARKING STOP BAR 24" WHITE
- TEMPORARY BRIDGE TRAFFIC SIGNAL W/BACKPLATE
- PAVEMENT CONNECTOR (HMA) FOR APPROACH SLAB

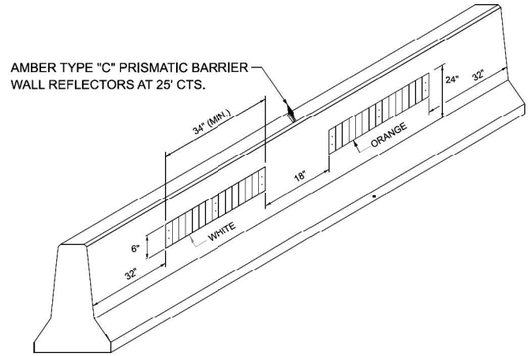

LINEAR DELINEATOR PANELS FOR TEMPORARY CONCRETE BARRIER

N

0 20 40
SCALE IN FEET

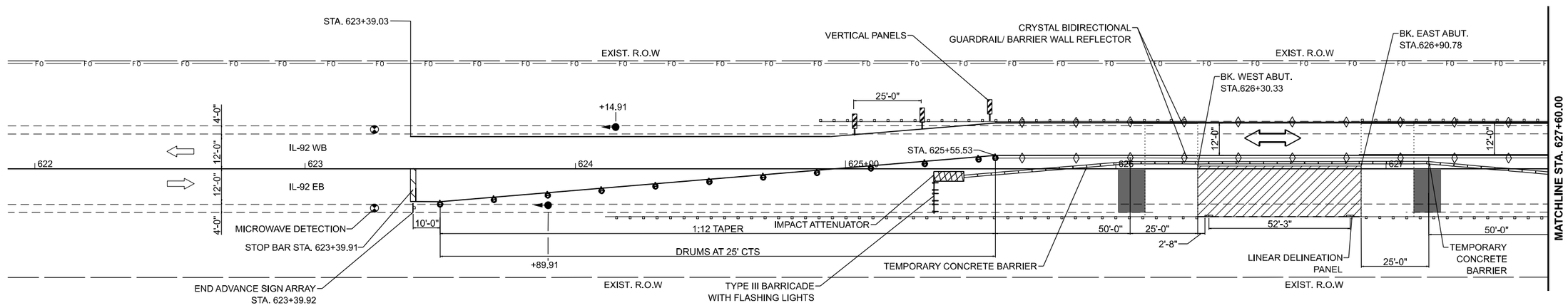

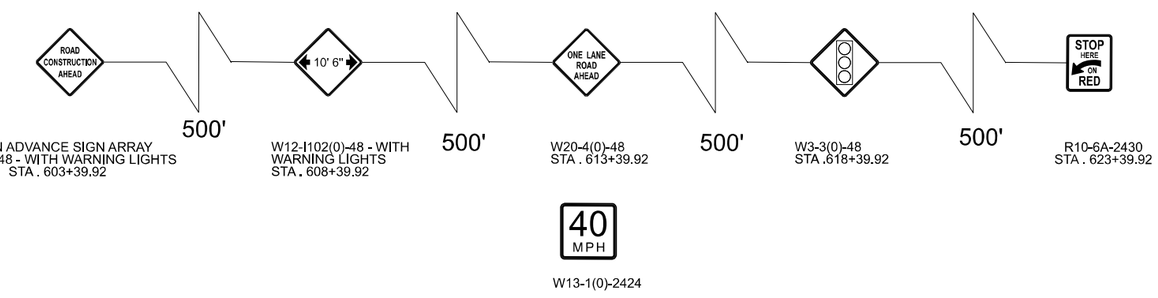

MODEL: Default
FILE NAME: F:\Projects\1084 - Phase II - Kuhn and Trello\WO 4\Design\Dgn\D366P34-Border.dgn

AMES Engineering, Inc.
CONSULTING ENGINEERS
6330 Belmont Road, Suite 4B
Downers Grove, IL 60516

USER NAME = sgurmani	DESIGNED - MAA, SAG	REVISED -	
	DRAWN - MAA, SAG	REVISED -	
PLOT SCALE = 0.16666633 ' / in.	CHECKED - JAR	REVISED -	
PLOT DATE = 10/8/2024	DATE - 9/6/2024	REVISED -	

STATE OF ILLINOIS
DEPARTMENT OF TRANSPORTATION

MAINTENANCE OF TRAFFIC - STAGE I
IL-92 OVER BRANCH OF MASTERS CREEK

SCALE: 1"=20' | SHEET 1 OF 2 SHEETS | STA. 621+89.97 TO STA. 627+60.00

F.A.P. RTE.	SECTION	COUNTY	TOTAL SHEETS	SHEET NO.
587	(140B)BRR	BUREAU	37	15
		CONTRACT NO. 66P34		
		ILLINOIS	FED. AID PROJECT	

LEGEND

- DIRECTION OF TRAFFIC FLOW
- DRUM WITH PAVEMENT MARKING WITH WARNING LIGHTS
- TEMPORARY CONCRETE BARRIER
- WORK ZONE
- IMPACT ALTENUATOR, TEMPORARY, (NON-REFLECTIVE, NARROW) TEST LEVEL 3
- SIGN
- TYPE III BARRICADE WITH FLASHING WHEN ARE WORKER NOT PRESENT
- TEMPORARY PAVEMENT MARKING LINE 4" (WHITE)
- SHORT TERM PAVEMENT MARKING STOP BAR 24" WHITE
- TEMPORARY BRIDGE TRAFFIC SIGNAL W/BACKPLATE
- PAVEMENT CONNECTOR (HMA) FOR APPROACH SLAB

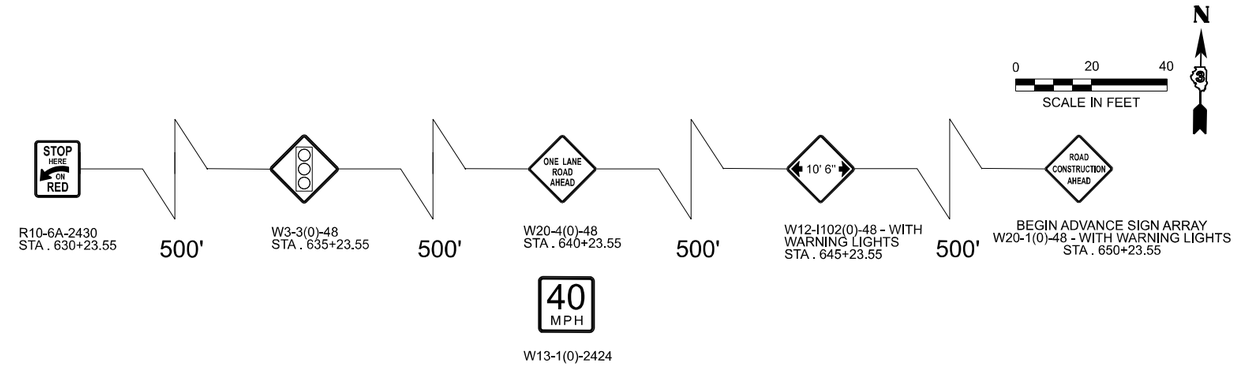

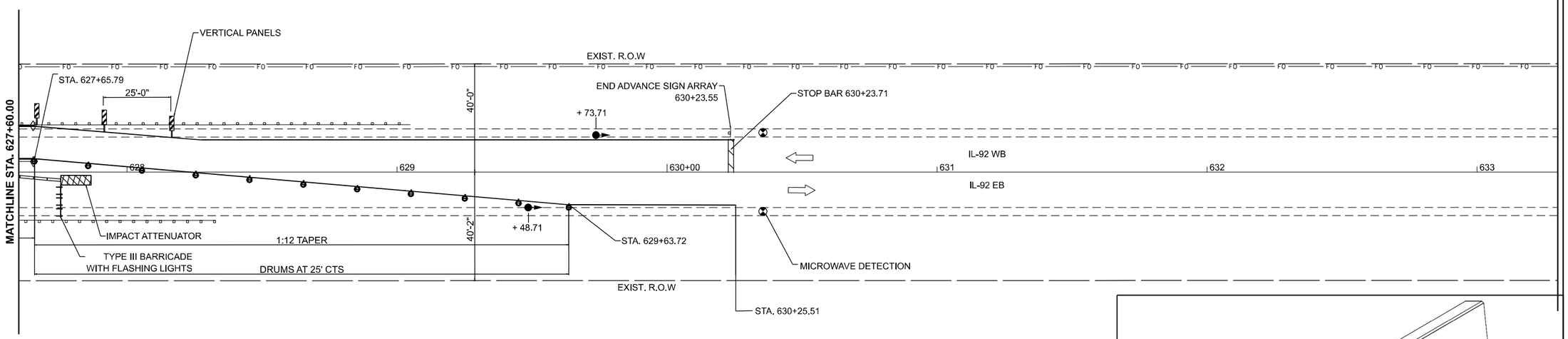

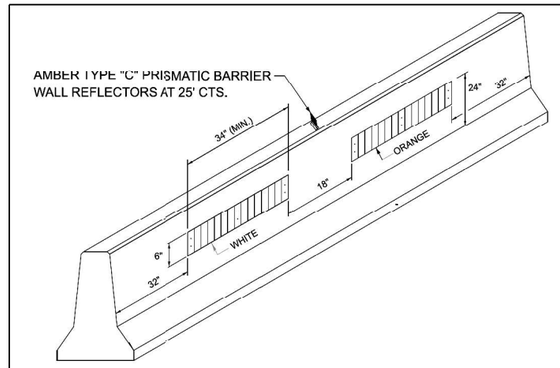

LINEAR DELINEATOR PANELS FOR TEMPORARY CONCRETE BARRIER

MODEL: Default
FILE NAME: F:\Projects\1094 - Phase II - Kuhn and Trello\WO 4\Design\Dgn\D366P34-Border.dgn

AMES Engineering, Inc.
CONSULTING ENGINEERS
6330 Belmont Road, Suite 4B
Downers Grove, IL 60516

USER NAME = sgurmani	DESIGNED - MAA, SAG	REVISED -	
	DRAWN - MAA, SAG	REVISED -	
PLOT SCALE = 0.16666633 ' / in.	CHECKED - JAR	REVISED -	
PLOT DATE = 10/8/2024	DATE - 9/6/2024	REVISED -	

STATE OF ILLINOIS
DEPARTMENT OF TRANSPORTATION

MAINTENANCE OF TRAFFIC - STAGE I
IL-92 OVER BRANCH OF MASTERS CREEK

SCALE: 1"=20' | SHEET 2 OF 2 SHEETS | STA. 627+60.00 TO STA. 633+29.97

F.A.P. RTE.	SECTION	COUNTY	TOTAL SHEETS	SHEET NO.
587	(140B)BRR	BUREAU	37	16
		CONTRACT NO. 66P34		
	ILLINOIS	FED. AID PROJECT		

LEGEND

- DIRECTION OF TRAFFIC FLOW
- DRUM WITH PAVEMENT MARKING WITH WARNING LIGHTS
- TEMPORARY CONCRETE BARRIER
- WORK ZONE
- IMPACT ALTENUATOR, TEMPORARY, (NON-REFLECTIVE, NARROW) TEST LEVEL 3
- SIGN
- TYPE III BARRICADE WITH FLASHING WHEN ARE WORKER NOT PRESENT
- TEMPORARY PAVEMENT MARKING LINE 4" (WHITE)
- SHORT TERM PAVEMENT MARKING STOP BAR 24" WHITE
- TEMPORARY BRIDGE TRAFFIC SIGNAL W/BACKPLATE
- PAVEMENT CONNECTOR (HMA) FOR APPROACH SLAB

N

0 20 40
SCALE IN FEET

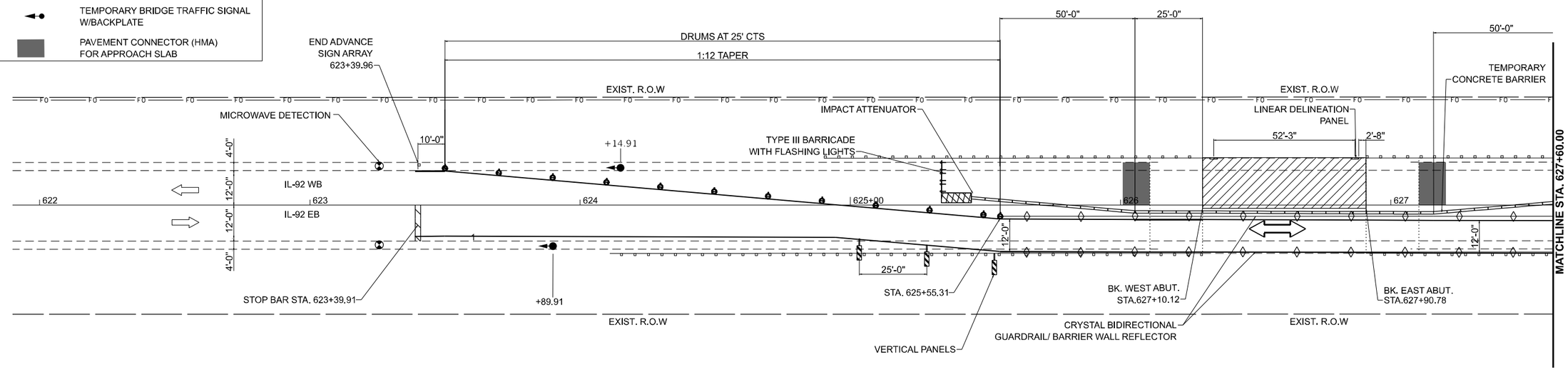

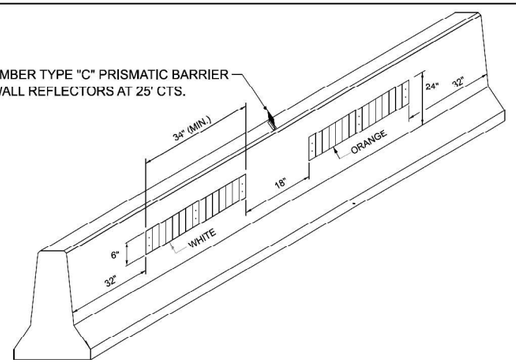

LINEAR DELINEATOR PANELS FOR TEMPORARY CONCRETE BARRIER

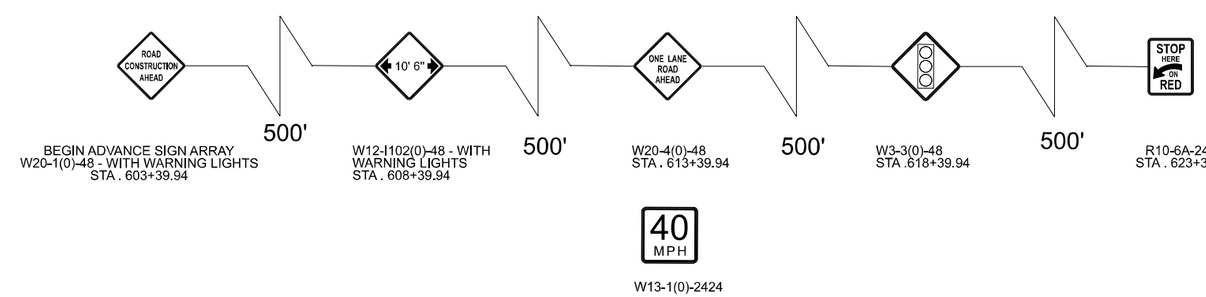

MODEL: Default
FILE NAME: F:\Projects\1084 - Phase II - Kuhn and Trello\WO 4\Design\Dgn\D366P34-Border.dgn

AMES Engineering, Inc. CONSULTING ENGINEERS 6330 Belmont Road, Suite 4B Downers Grove, IL 60516	USER NAME = sgurmani	DESIGNED - MAA, SAG	REVISED -	STATE OF ILLINOIS DEPARTMENT OF TRANSPORTATION	MAINTENANCE OF TRAFFIC - STAGE II IL-92 OVER BRANCH OF MASTERS CREEK
		DRAWN - MAA, SAG	REVISED -		
	PLOT SCALE = 0.16666633 ' / in.	CHECKED - JAR	REVISED -		
	PLOT DATE = 10/8/2024	DATE - 9/6/2024	REVISED -		SCALE: 1"=20 SHEET 1 OF 2 SHEETS STA. TO STA.

F.A.P. RTE.	SECTION	COUNTY	TOTAL SHEETS	SHEET NO.
587	(140B)BRR	BUREAU	37	17
		CONTRACT NO. 66P34		
		ILLINOIS	FED. AID PROJECT	

LEGEND

- DIRECTION OF TRAFFIC FLOW
- DRUM WITH PAVEMENT MARKING WITH WARNING LIGHTS
- TEMPORARY CONCRETE BARRIER
- WORK ZONE
- IMPACT ALTENUATOR, TEMPORARY, (NON-REFLECTIVE, NARROW) TEST LEVEL 3
- SIGN
- TYPE III BARRICADE WITH FLASHING WHEN ARE WORKER NOT PRESENT
- TEMPORARY PAVEMENT MARKING LINE 4" (WHITE)
- SHORT TERM PAVEMENT MARKING STOP BAR 24" WHITE
- TEMPORARY BRIDGE TRAFFIC SIGNAL W/BACKPLATE
- PAVEMENT CONNECTOR (HMA) FOR APPROACH SLAB

N

0 20 40

SCALE IN FEET

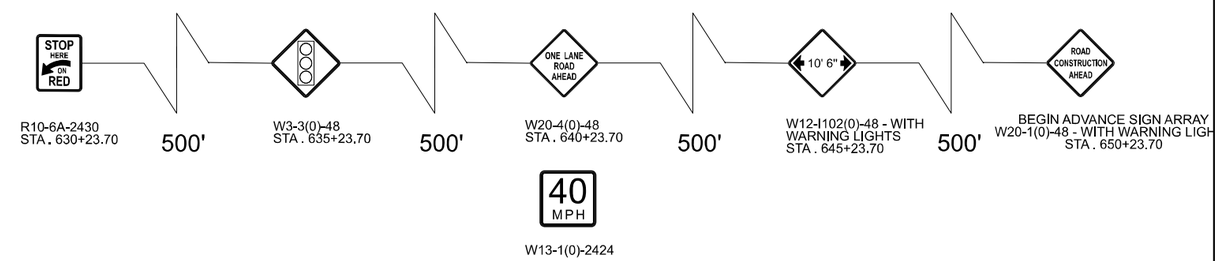

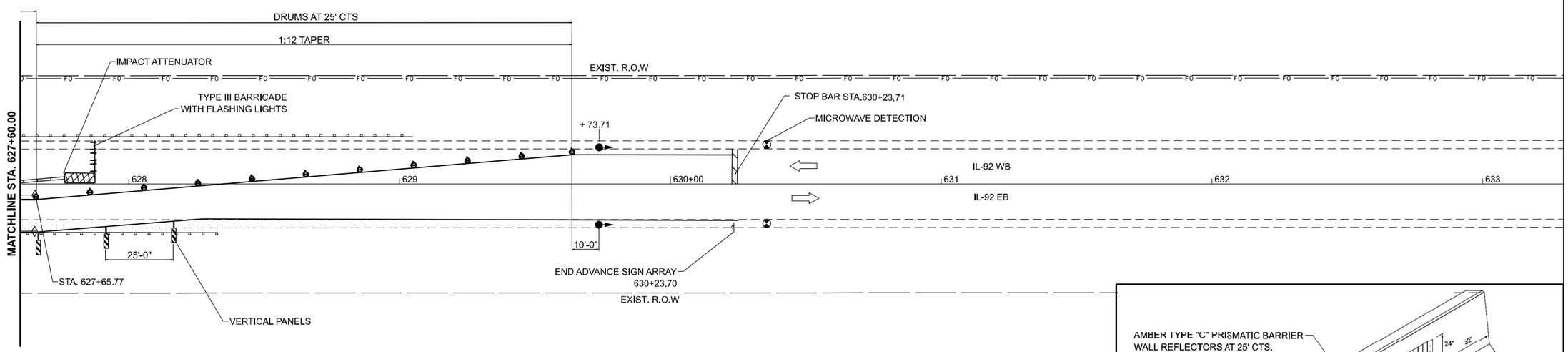

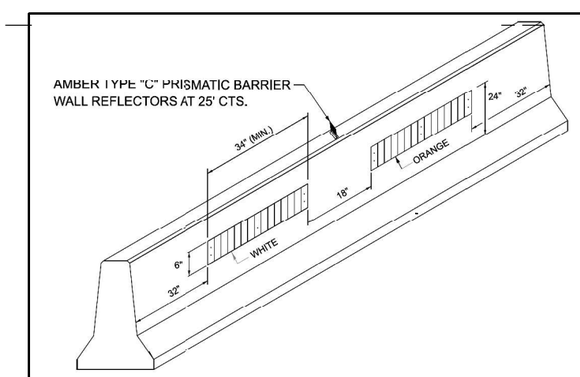

LINEAR DELINEATOR PANELS FOR TEMPORARY CONCRETE BARRIER

MODEL: Default
FILE NAME: F:\Projects\1084 - Phase II - Kuhn and Trello\WO 4\Design\Dgn\D366P34-Border.dgn

AMES Engineering, Inc.
CONSULTING ENGINEERS
6330 Belmont Road, Suite 4B
Downers Grove, IL 60516

USER NAME = sgurmani	DESIGNED - MAA, SAG	REVISED -	
	DRAWN - MAA, SAG	REVISED -	
PLOT SCALE = 0.16666633 ' / in.	CHECKED - JAR	REVISED -	
PLOT DATE = 10/8/2024	DATE - 9/6/2024	REVISED -	

STATE OF ILLINOIS
DEPARTMENT OF TRANSPORTATION

MAINTENANCE OF TRAFFIC - STAGE II
IL-92 OVER BRANCH OF MASTERS CREEK

SCALE: 1"=20' | SHEET 2 OF 2 SHEETS | STA. 627+60.00 TO STA. 633+30.00

F.A.P. RTE.	SECTION	COUNTY	TOTAL SHEETS	SHEET NO.
587	(140B)BRR	BUREAU	37	18
		CONTRACT NO. 66P34		
	ILLINOIS	FED. AID PROJECT		

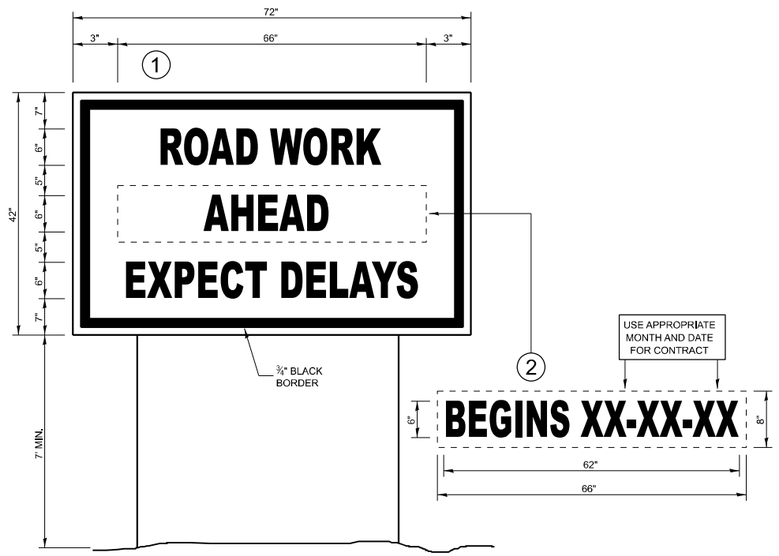

TEMPORARY INFORMATION SIGNING

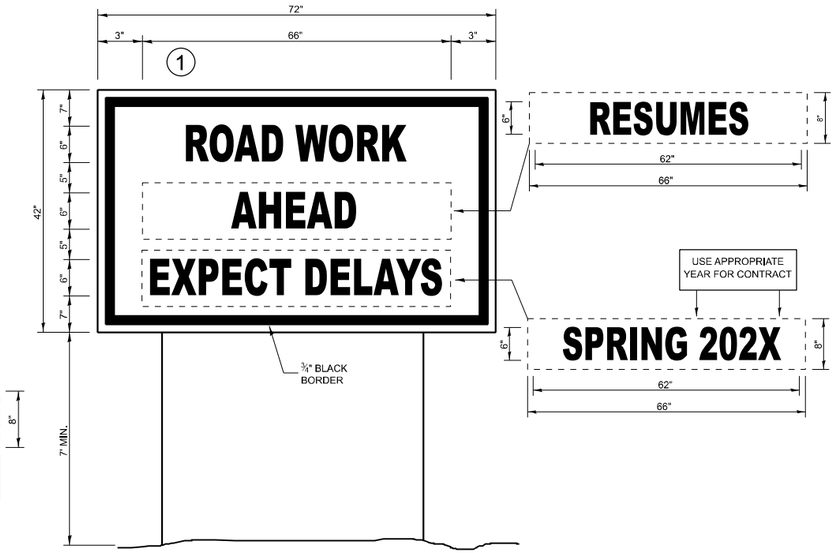

WINTER SHUT DOWN SIGNING

NOTES:

1. USE 6" D BLACK LETTERING ON FLOURESENT ORANGE BACKGROUND.
2. ERECT SIGNS AT LOCATIONS IN ADVANCE OF THE "ROAD CONSTRUCTION AHEAD" SIGNS AS DIRECTED BY THE ENGINEER.
3. ERECT SIGN①WITH INSTALLED PANEL②A MINIMUM OF ONE WEEK PRIOR TO THE START OF THE LANE CLOSURE.
4. REMOVE PANEL②ON THAT DATE.
5. SEE SPECIAL PROVISION "TEMPORARY INFORMATION SIGNING" FOR ADDITIONAL INFORMATION.
6. WILL BE PAID FOR PER SQ FT AS "TEMPORARY INFORMATION SIGNING". EACH SIGN = 21 SQ FT AND THE DATE PANEL②WILL NOT BE MEASURED SEPARATELY FOR PAYMENT.

MODEL: Default
FILE NAME: F:\Projects\1084 - Phase II - Kuhn and Trello\WO 4\Design\Dgn\D366P34-Border.dgn

AMES Engineering, Inc.
CONSULTING ENGINEERS
6330 Belmont Road, Suite 4B
Downers Grove, IL 60516

USER NAME = sgurmani	DESIGNED - MAA, SAG	REVISED -	
	DRAWN - MAA, SAG	REVISED -	
PLOT SCALE = 0.16666633 ' / in.	CHECKED - JAR	REVISED -	
PLOT DATE = 10/8/2024	DATE - 9/6/2024	REVISED -	

STATE OF ILLINOIS
DEPARTMENT OF TRANSPORTATION

TEMPORARY SIGNING DETAIL
IL-92 OVER BRANCH OF MASTERS CREEK

SCALE: NONE | SHEET 1 OF 1 SHEETS | STA. TO STA.

F.A.P. RTE.	SECTION	COUNTY	TOTAL SHEETS	SHEET NO.
587	(140B)BRR	BUREAU	37	19
		CONTRACT NO. 66P34		
	ILLINOIS	FED. AID PROJECT		

Existing Structure: SN 006-0101 is a single span W33 composite steel beam superstructure with a CIP 7½" deck. The structure was originally built in 1932 at STA 626+60 on closed abutments over timber piles, and Tee-beam superstructure, then widened in 1949. The superstructure was replaced in 1991.

SCOPE OF WORK

1. Removal of deck ends and parapet at deck ends.
2. Removal of existing expansion joints.
3. Removal of existing approach slab under travel lanes.
4. Deck slab repairs.
5. Install new expansion joints and pour deck ends.
6. Install new rubber strip seal into locking edge rails.
7. Pour parapet ends.
8. Pour new approach footing and slab.
9. Repair northwest approach shoulder curb.

GENERAL NOTES

Plan dimensions and details relative to the existing structure have been taken from existing plans are subject to nominal construction variations. The Contractor shall field verify existing dimensions and details affecting new construction and make necessary approved adjustments prior to construction or ordering of materials. Such variations shall not be cause for additional compensation for a change in scope of the work, however, the Contractor will be paid for the quantity actually furnished at the unit price bid for the work.

Reinforcement bars designated (E) shall be epoxy coated.

Protective Coat shall be applied to the finished surfaces of all new concrete areas including the deck and approach slab repairs.

The deck surface shall have its final finish tined according to Article 420.09(e)(1) of the Standard Specifications. Cost included with Concrete Superstructure.

Joint openings shall be adjusted according to Article 520.04 of the Std. Specs. When the deck is poured at an ambient temperature other than 50°F.

Expansion joints shall be fabricated and installed according to the manufacturer's recommendations and as approved by the Engineer.

Expansion joints shall be fabricated to conform to the existing cross slopes of the bridge.

Existing reinforcement shall be cleaned, straightened and incorporated into the new construction. Cost included with Concrete Removal.

The Contractor shall use extreme care during concrete removal not to damage the structural steel.

Prior to pouring the new concrete deck, all heavy or loose rust, loose mill scale, and other loose or potentially detrimental foreign material shall be removed from the surfaces in contact with the concrete. Tightly adhered paint may remain unless otherwise noted. Removal shall be accomplished by methods that will not damage the steel and the cost will be included in the pay item covering removal of the existing concrete.

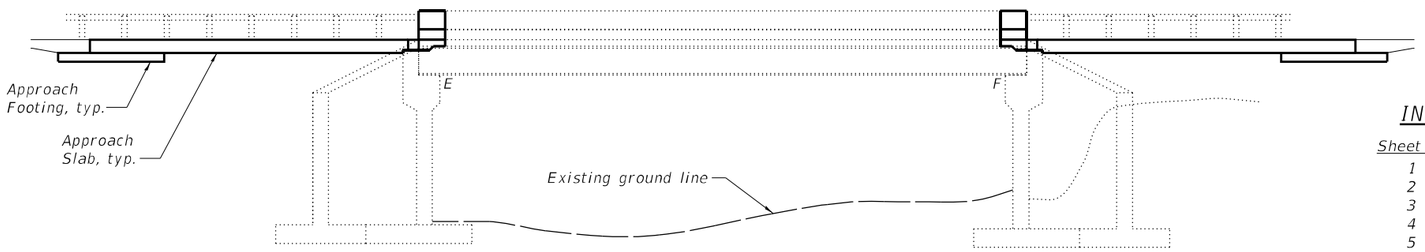

ELEVATION

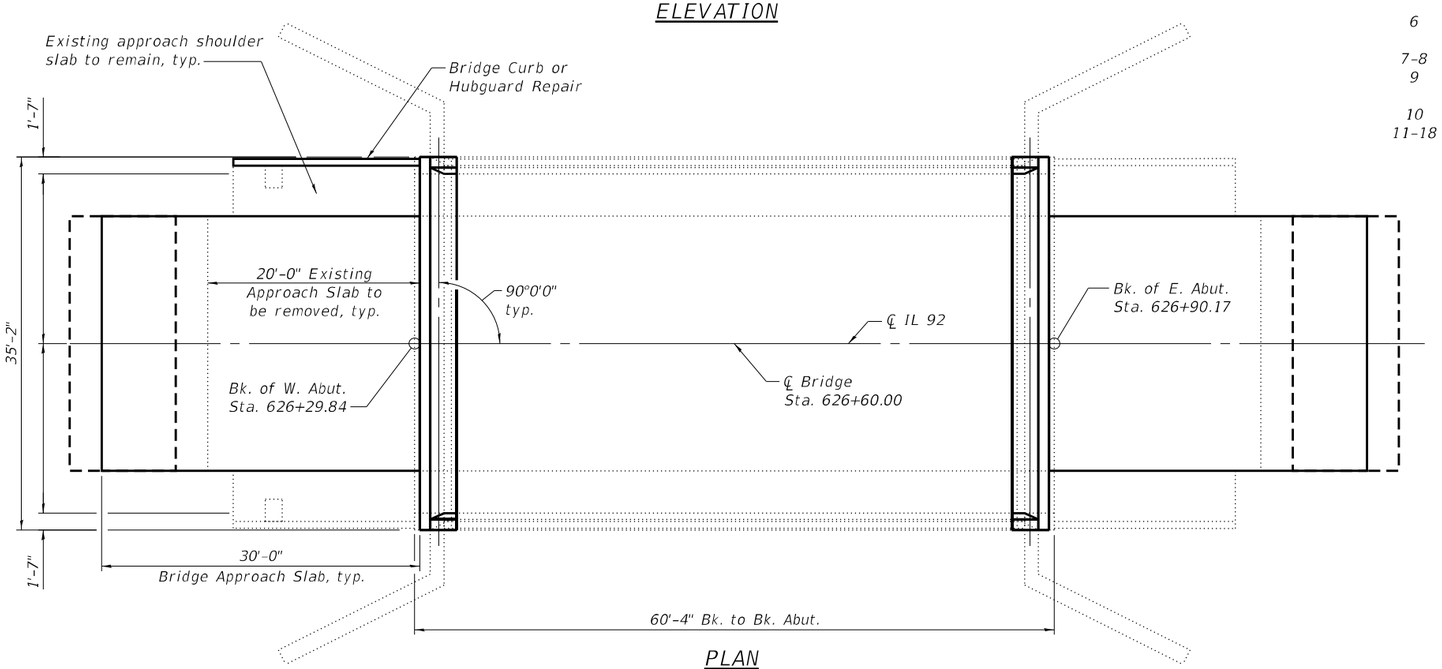

PLAN

INDEX OF SHEETS

Sheet No.	Description
1	General Plan & Elevation
2	Stage Construction Details
3	Temporary Concrete Barrier
4	Deck Slab Repair Plan
5	Superstructure - Concrete Removal details
6	Superstructure - Deck Reinforcement Details
7-8	Bridge Approach Slab Details
9	Bar Splicer Assembly and Mech. Splicer Details
10	Performed Joint Strip Seal
11-18	Existing Bridge Plans

DESIGN STRESSES

FIELD UNITS

New Construction
f'c = 4,000 psi
fy = 60,000 psi (Reinforcement)

Existing Structure
f'c = 3,500 psi
fy = 60,000 psi (Reinforcement)
fy = 50,000 psi (Structural Steel - M223 Grade 50)

Range 10E, 4th P.M.

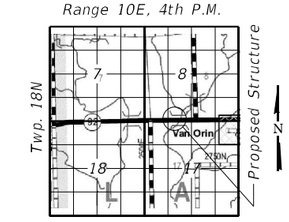

LOCATION SKETCH

TOTAL BILL OF MATERIAL

Item	Unit	Total
Concrete Removal	Cu. Yd.	9.8
Concrete Structures	Cu. Yd.	14.8
Concrete Superstructure	Cu. Yd.	9.8
Protective Coat	Sq. Yd.	190
Concrete Superstructure (Approach Slab)	Cu. Yd.	66.7
Reinforcement Bars, Epoxy Coated	Pound	27,650
Bar Splicers	Each	318
Preformed Joint Strip Seal	Foot	68
Approach Slab Removal	Sq. Yd.	107
Bridge Curb or Hubguard Repair	Foot	15
Deck Slab Repair (Full Depth, Type II)	Sq. Yd.	2
Deck Slab Repair (Partial)	Sq. Yd.	3

Plans Prepared by
Civil Design, Inc.

STEPHEN J. NOETH
081.008005
LICENSED STRUCTURAL ENGINEER OF ILLINOIS

Date: 10/04/2024

Expiration: 11/30/2024

GENERAL PLAN & ELEVATION
IL 92 OVER BRANCH OF MASTERS CREEK
F.A.P. 587 - SEC. (140B)BRR
BUREAU COUNTY
STATION 626+60.00
STRUCTURE NO. 006-0101

CDI CIVIL DESIGN, INC. WBE / DBE EFFINGHAM, IL LICENSE #184.003222

USER NAME =	DESIGNED - NP	REVISED -
	CHECKED - SJN	REVISED -
PLOT SCALE =	DRAWN - NP	REVISED -
PLOT DATE =	CHECKED - SJN	REVISED -

STATE OF ILLINOIS
DEPARTMENT OF TRANSPORTATION

SHEET 1 OF 18 SHEETS

F.A.P RTE.	SECTION	COUNTY	TOTAL SHEETS	SHEET NO.
587	(140B)BRR	BUREAU	37	20
		CONTRACT NO. 66P34		
		ILLINOIS	FED. AID PROJECT	

MODEL: Default
FILE NAME: P:\5XX\58XX-59XX\5920 - PTB 205-023 D3 VV_Kuhn Trello\0W04\24-Structures\CAD - SS10006010\1-66P34-001_GPE.dgn
10/4/2024 3:21:34 PM

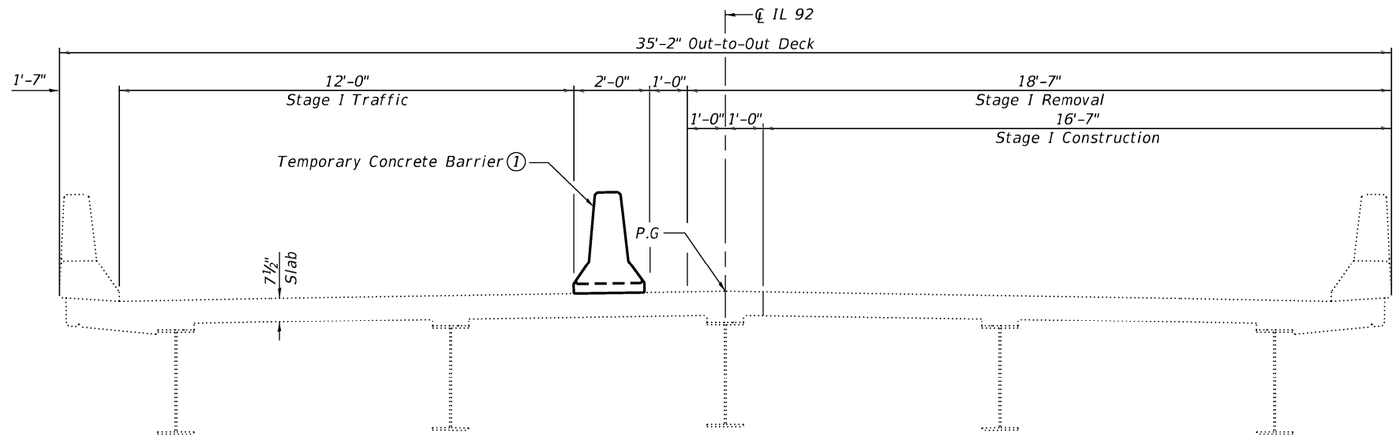

STAGE I REMOVAL & CONSTRUCTION

(Looking East)

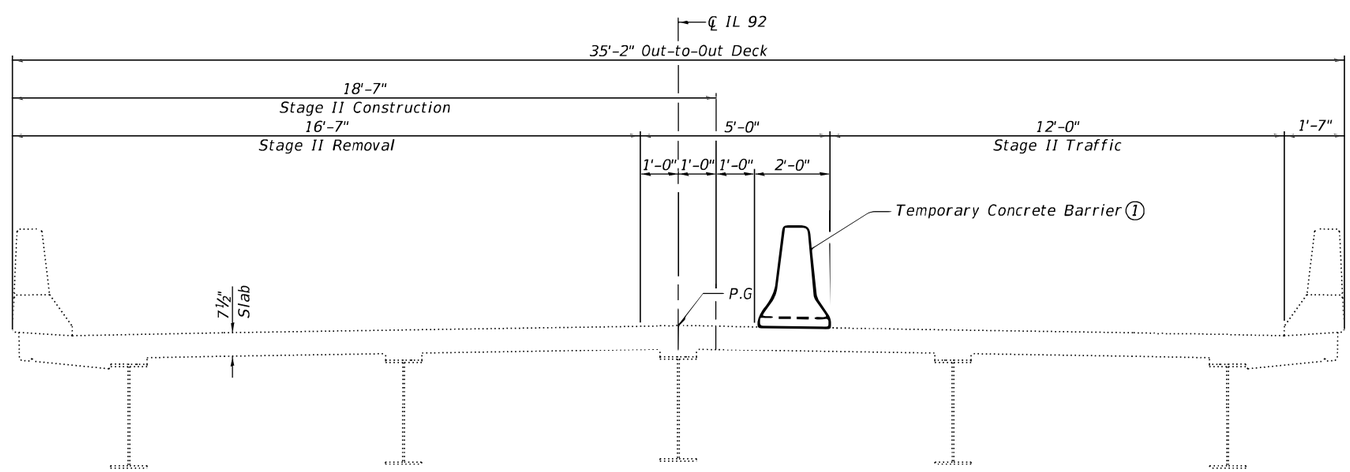

STAGE II REMOVAL & CONSTRUCTION

(Looking East)

Notes:

1. For details of Temporary Concrete Barrier, see sheet 3 of 18. See roadway plans for quantity of Temporary Concrete Barrier and related traffic control.

MODEL: Default
FILE NAME: P:\XXX\58XX-59XX\5920 - PTB 205-023 D3 VV_Kuhn Trello\0WO4\24-Structures\CAD - SS10\0060101-66P34-002_Stage Construction Details.dgn

10/4/2024 3:22:02 PM

CDI CIVIL DESIGN, INC. WBE / DBE EFFINGHAM, IL LICENSE #184.003222

USER NAME =	DESIGNED - NP	REVISED -	
	CHECKED - SJN	REVISED -	
PLOT SCALE =	DRAWN - NP	REVISED -	
PLOT DATE =	CHECKED - SJN	REVISED -	

STATE OF ILLINOIS
DEPARTMENT OF TRANSPORTATION

STAGE CONSTRUCTION DETAILS
STRUCTURE NO. 006-0101

SHEET 2 OF 18 SHEETS

F.A.P RTE.	SECTION	COUNTY	TOTAL SHEETS	SHEET NO.
587	(140B)BRR	BUREAU	37	21

CONTRACT NO. 66P34

ILLINOIS | FED. AID PROJECT

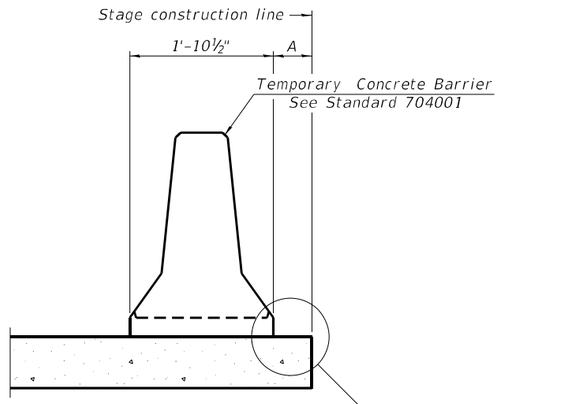

When "A" is 3'-1" or less, the temporary concrete barrier shall be restrained to the new slab according to Detail I, II or III. No restraint is required when "A" is greater than 3'-1".

NEW SLAB OR NEW DECK BEAM

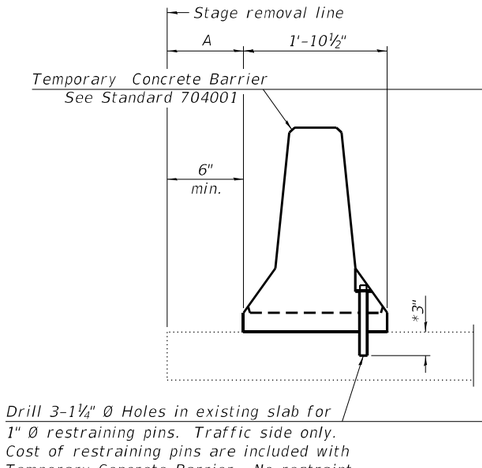

Drill 3-1¼" Ø Holes in existing slab for 1" Ø restraining pins. Traffic side only. Cost of restraining pins are included with Temporary Concrete Barrier. No restraint is required when "A" is greater than 3'-1".

EXISTING SLAB

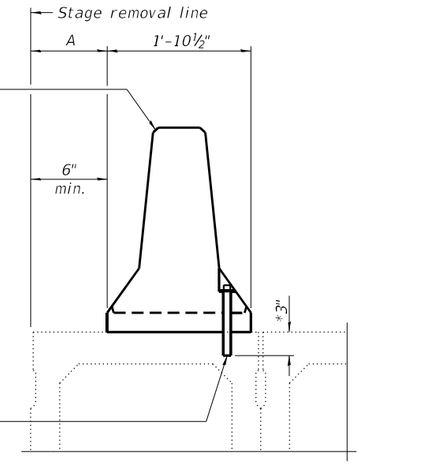

* When hot-mix asphalt wearing surface is present, embedment shall be 3" plus the wearing surface depth.

EXISTING DECK BEAM

SECTIONS THRU SLAB OR DECK BEAM

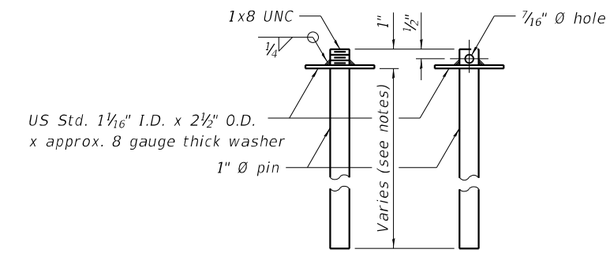

RESTRAINING PIN

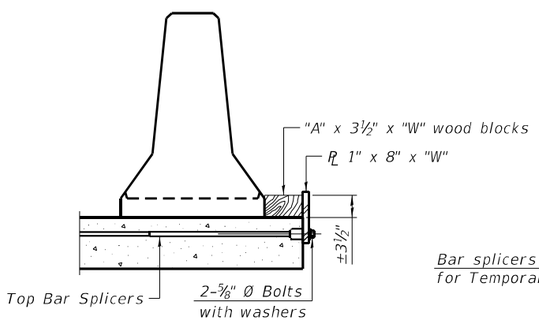

DETAIL I

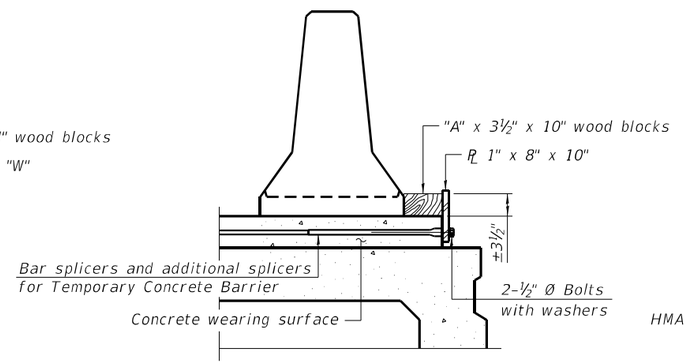

DETAIL II

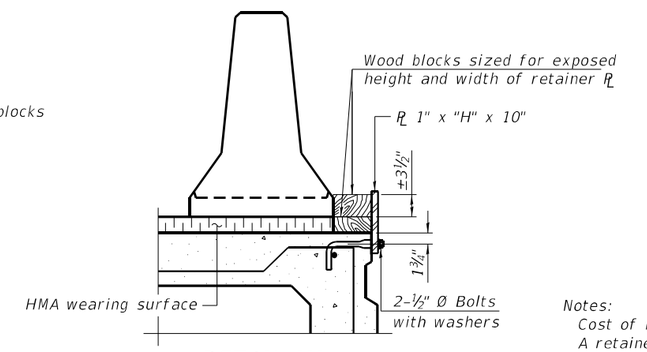

DETAIL III

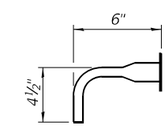

BAR SPLICER FOR #4 BAR - DETAIL III

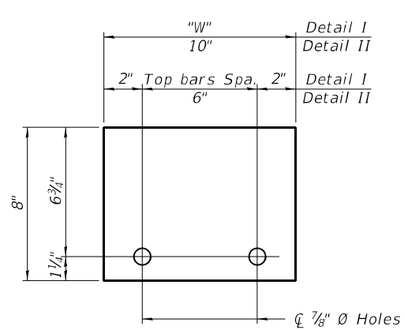

STEEL RETAINER PL 1" x 8" x "W"

(Detail I and II)

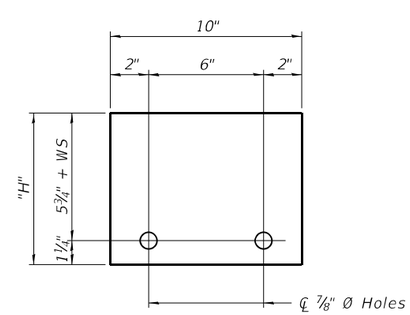

STEEL RETAINER PL 1" x "H" x 10"

(Detail III)

Notes:

Cost of retainer assembly is included with Temporary Concrete Barrier.

A retainer assembly shall be located at the approximate ℄ of each temporary concrete barrier.

The retainer plate shall not be removed until the concrete on the adjacent stage is ready to be poured. For Detail III applications the retainer plate shall not be removed until just prior to placing the adjacent beam.

When the 'A' dimension is less than 1½", the wood block shall be omitted and the barrier shall be placed in direct contact with the steel retainer plate. For deck beam applications the minimum required 'A' distance is 6" to accommodate the shear key clamping device.

Detail I - Installation for a new bridge deck or bridge slab.

Detail II - Installation for a new deck beam with an initial concrete wearing surface. Additional bar splicers shall be provided at 6'-0" centers and paired with the bar splicers of the concrete wearing surface reinforcement to accommodate the installation of the retainer assemblies. The cost of the additional bar splicers is included with the concrete wearing surface.

Detail III - Installation for a new deck beam with no initial wearing surface or with an initial hot-mix asphalt (HMA) wearing surface present. The deck beam directly beneath the temporary concrete barrier shall be fabricated with bar splicer inserts in the side of the beam, as detailed, to accommodate the installation of the retainer assemblies. A pair of bar splicers, 6" apart, shall be placed at 6'-0" centers along the length of the beam. The cost of the bar splicers is included with the deck beam.

RAILING CRITERIA

NCHRP 350 Test Level	3
Railing Weight (plf)	440

R-27

5-15-2023

CDI CIVIL DESIGN, INC. WBE / DBE EFFINGHAM, IL LICENSE #184.003222

USER NAME =	DESIGNED -	REVISED -
	CHECKED -	REVISED -
PLOT SCALE =	DRAWN -	REVISED -
PLOT DATE =	CHECKED -	REVISED -

STATE OF ILLINOIS
DEPARTMENT OF TRANSPORTATION

TEMPORARY CONCRETE BARRIER
STRUCTURE NO. 006-0101

SHEET 3 OF 18 SHEETS

F.A.P RTE.	SECTION	COUNTY	TOTAL SHEETS	SHEET NO.
587	(140B)BRR	BUREAU	37	22
		CONTRACT NO. 66P34		
	ILLINOIS	FED. AID PROJECT		

MODEL: Default
FILE NAME: P:\5XX\58XX-59XX\5920 - PTB 205-023 D3 VV_Kuhn Trello\0V04\24-Structures\CAD - SS100006101-66P34-003_Temporary Concrete Barrier.dgn
10/4/2024 3:22:25 PM

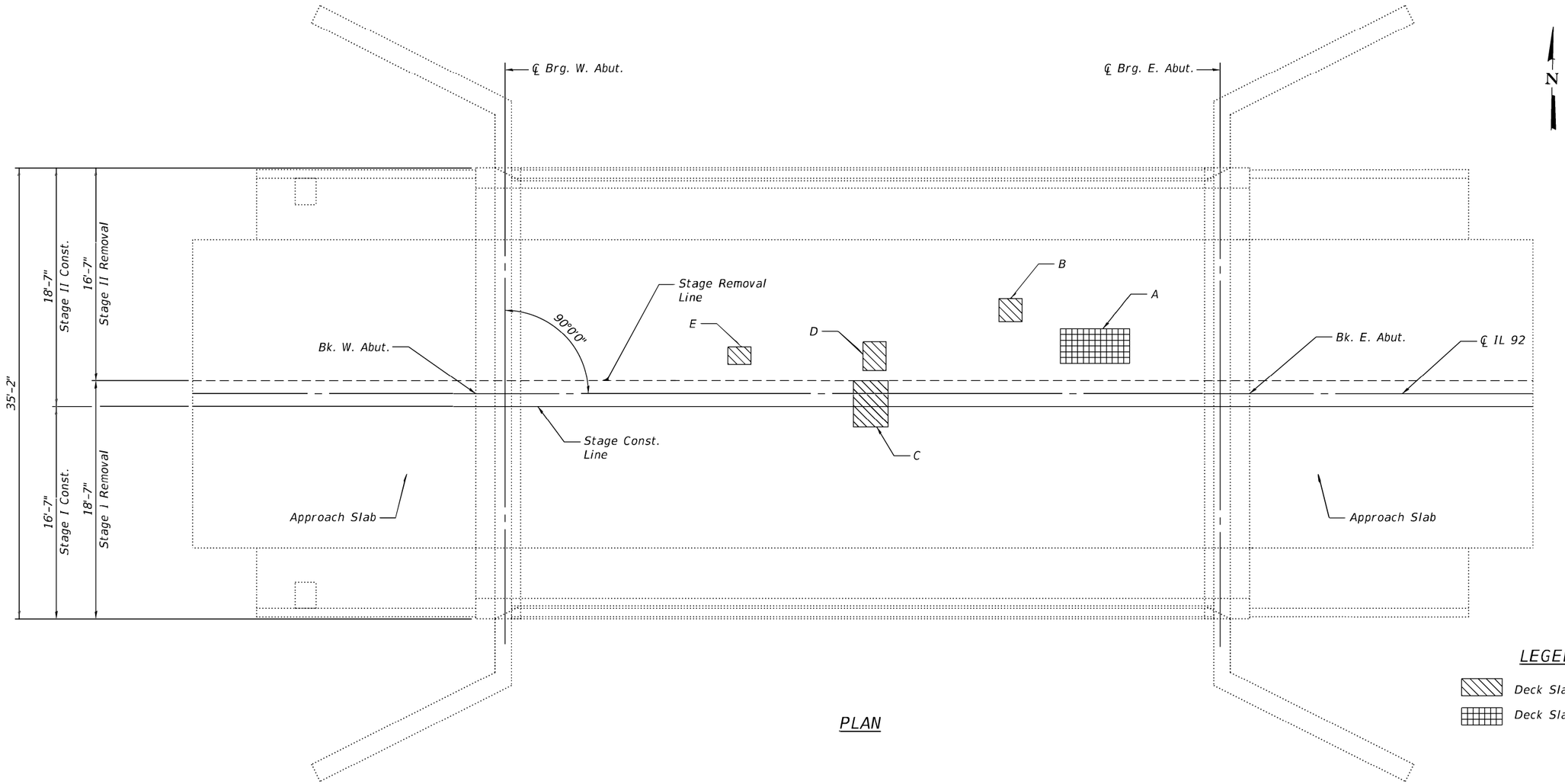

PLAN

LEGEND

Deck Slab Repair (Partial)

Deck Slab Repair (Full Depth, Type II)

Notes:

1. The Engineer shall show actual locations of deck repairs on as-built plans.
2. Extreme care must be used when removing concrete near the top flange of the beams. The Contractor is responsible for any damage to the beams.
3. Quantities and limits of repairs shown are estimated only. The actual areas to be repaired shall be determined by the Engineer at the time of construction.
4. Concrete shall be Class PP-1, PP-2, or BS. For additional requirements of Deck Slab Repair, see Special Provisions.

DECK SLAB REPAIR (FULL DEPTH, TYPE II)

Const. Stage	Area	Length (Ft.)	Width (Ft.)	Area (Sq. Yd.)
II	A	6	3	2.0

DECK SLAB REPAIR (PARTIAL)

Const. Stage	Area	Length (Ft.)	Width (Ft.)	Area (Sq. Yd.)
II	B	2	2	0.4
I & II	C	3	4	1.3
II	D	2	2.5	0.6
II	E	2	1.5	0.3

BILL OF MATERIAL

Item	Unit	Total
Deck Slab Repair (Full Depth, Type II)	Sq. Yd.	2
Deck Slab Repair (Partial)	Sq. Yd.	3

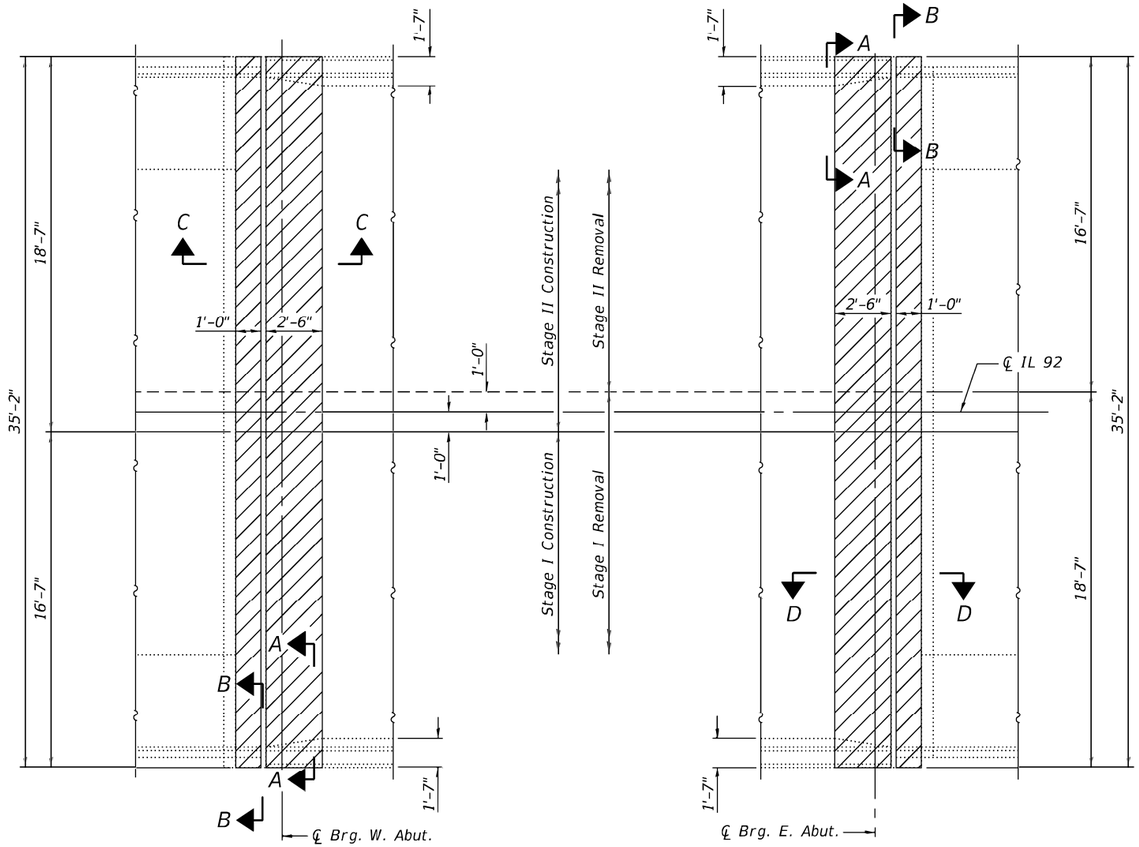

PARTIAL PLAN

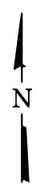

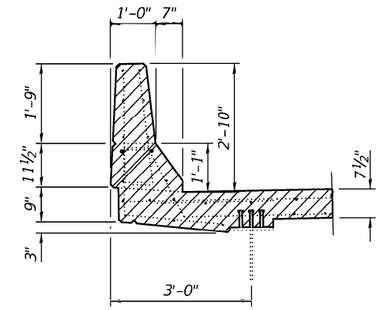

SECTION A-A

(Match Existing Parapet)

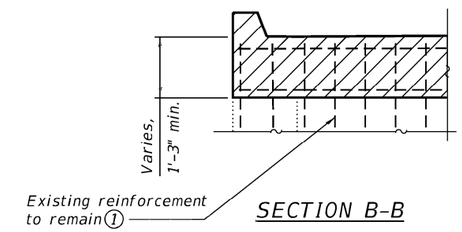

SECTION B-B

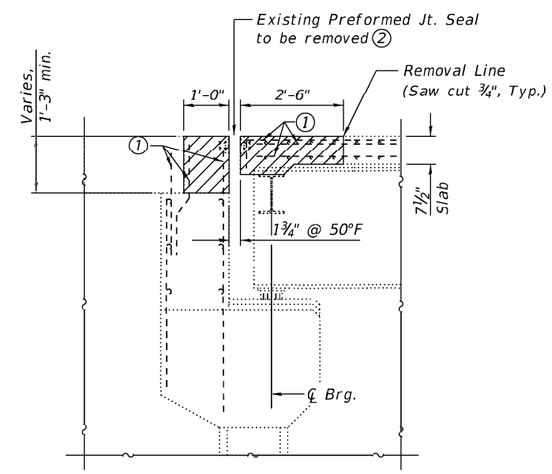

SECTION C-C

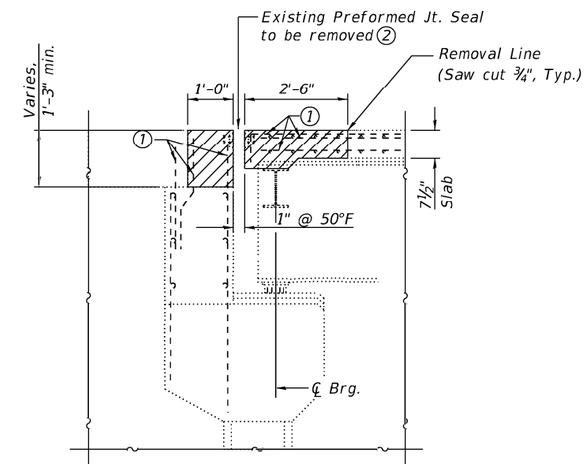

SECTION D-D

TYPICAL SECTION THRU. ABUTMENT

LEGEND

Concrete Removal

Notes:

① Existing reinforcement bars extending into the removal area shall be cleaned, straightened and incorporated into the New Construction. Any reinforcement bars that are damaged during Concrete Removal shall be replaced with an approved bar splicer or anchorage system. Cost included with Concrete Removal.

② The existing expansion joint system shall be removed completely, as well as any foreign material that has accumulated or been placed in the joint openings. The cost for this work is included in Concrete Removal and no additional compensation will be allowed.

BILL OF MATERIAL

Item	Unit	Total
Concrete Removal	Cu. Yd.	9.8

MODEL: Default
FILE NAME: P:\5XXX\58XX-59XX\5920 - PTB 205-023 D3 VV_Kuhn Trello\0WO4\24-Structures\CAD - SS10\0060101-66P34-005_Superstructure-Concrete Removal Details.dgn

10/4/2024 3:23:08 PM

CDI CIVIL DESIGN, INC. WBE / DBE EFFINGHAM, IL LICENSE #184.003222

USER NAME =	DESIGNED - NP	REVISED -	
	CHECKED - SJN	REVISED -	
PLOT SCALE =	DRAWN - NP	REVISED -	
PLOT DATE =	CHECKED - SJN	REVISED -	

STATE OF ILLINOIS
DEPARTMENT OF TRANSPORTATION

SUPERSTRUCTURE - CONCRETE REMOVAL DETAILS
STRUCTURE NO. 006-0101

SHEET 5 OF 18 SHEETS

F.A.P RTE.	SECTION	COUNTY	TOTAL SHEETS	SHEET NO.
587	(140B)BRR	BUREAU	37	24

CONTRACT NO. 66P34

ILLINOIS | FED. AID PROJECT

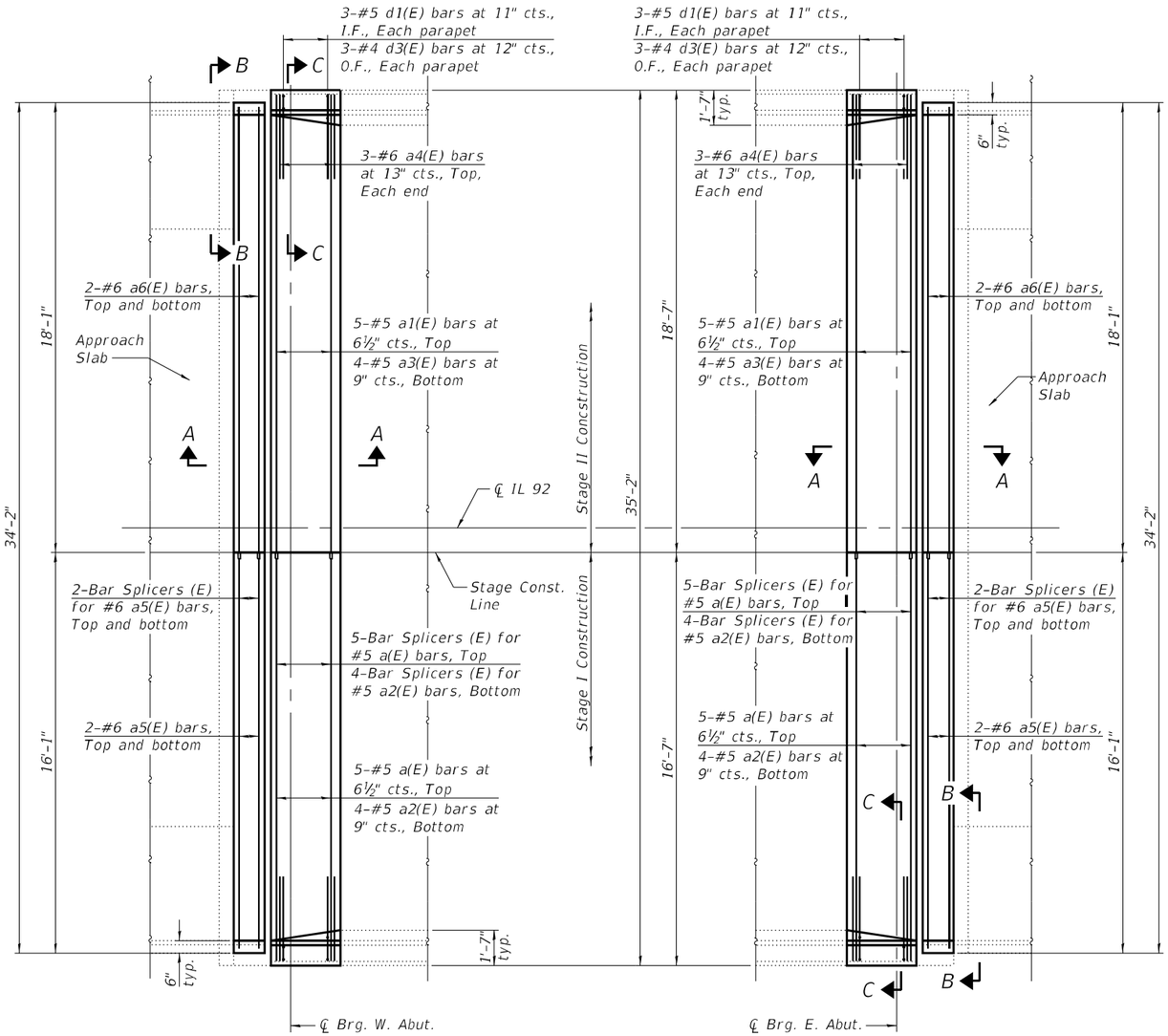

PARTIAL PLAN

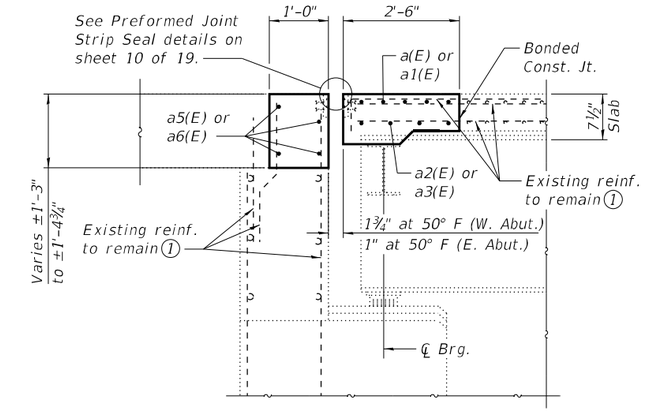

SECTION A-A

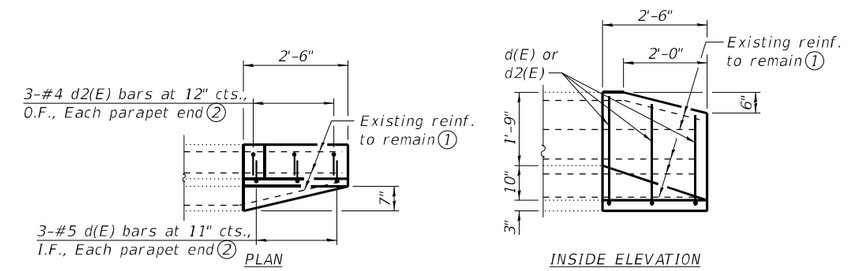

PARAPET TERMINATION DETAIL

(Match Existing Parapet)

Notes:

① Existing reinfocement extending into the removal area as shown shall be cleaned, straightened, and incorporated into the new construction. Any reinforcement bars that are damaged during approach slab removal shall be replaced with an approved bar splicer or anchorage system. Cost shall be included with Concrete Removal.

② Cut long leg of d(E) and d2(E) bars as needed to fit parapet taper.

③ I.F. denotes Inside Face and O.F. denotes Outside Face.

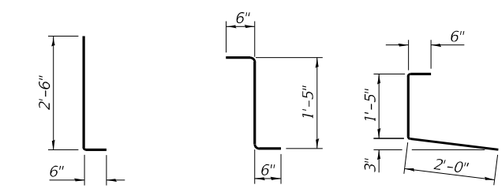

d(E) & d2(E)② d1(E) d3(E)

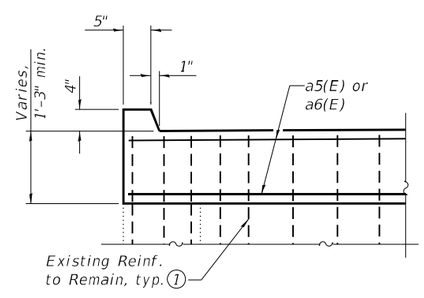

SECTION B-B

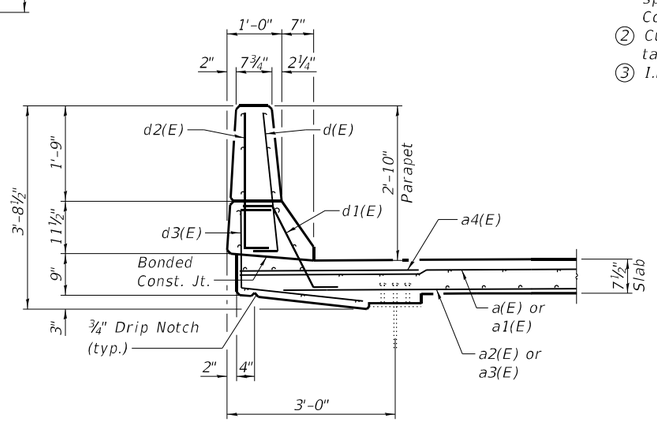

SECTION C-C

(Match Existing Parapet)

BILL OF MATERIAL

Bar	No.	Size	Length	Shape
a(E)	10	#5	16'-4"	
a1(E)	10	#5	18'-4"	
a2(E)	8	#5	15'-6"	
a3(E)	8	#5	17'-6"	
a4(E)	12	#6	4'-0"	
a5(E)	8	#6	15'-10"	
a6(E)	8	#6	17'-10"	
d(E)	12	#5	3'-0"	
d1(E)	12	#5	2'-5"	
d2(E)	12	#4	3'-0"	
d3(E)	12	#4	4'-2"	
Concrete Superstructure			Cu. Yd.	9.8
Reinforcement Bars, Epoxy Coated			Pound	1,240

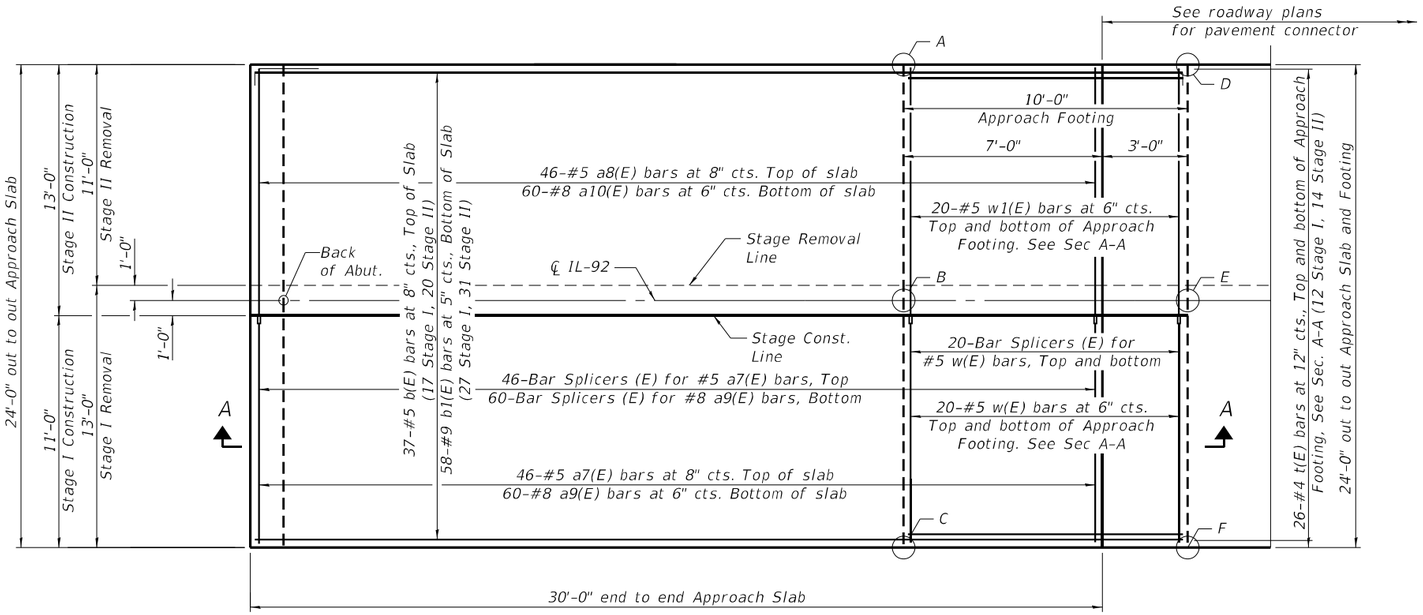

PLAN

(East approach slab shown; West approach slab similar)

TOP AND BOTTOM ELEVATIONS FOR APPROACH FOOTING ①

West Approach			East Approach		
Point/ Location	Top	Bottom	Point/ Location	Top	Bottom
A (NE)	782.53	781.70	A (NW)	783.70	782.87
B (East)	782.72	781.89	B (West)	783.89	783.06
C (SE)	782.53	781.70	C (SW)	783.70	782.87
D (NW)	782.42	781.59	D (NE)	783.81	782.98
E (West)	782.61	781.78	E (East)	784.00	783.17
F (SW)	782.42	781.59	F (SE)	783.81	782.98

Notes:
① Elevations determined from vertical profile data on the existing bridge plans.

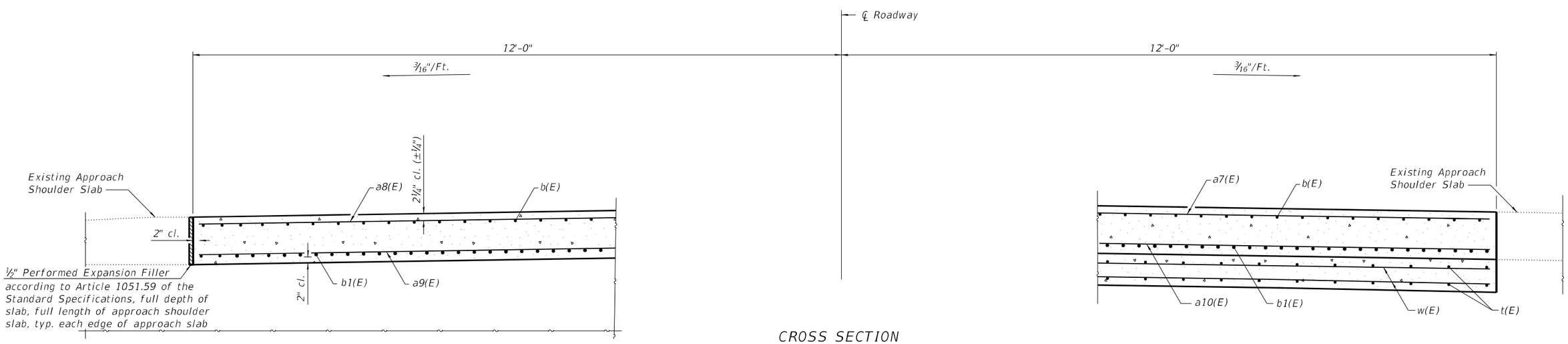

NEAR ABUTMENT

CROSS SECTION

(Looking East)

AT APPROACH FOOTING

(Sheet 1 of 2)

MODEL: Default
FILE NAME: P:\5XXX58XX-59XX5920 - PTB 205-023 D3 VV_Kuhn Trello\0WOA\24-Structures\CAD - SS10\0060101-66P34-007_Bridge Approach Slab Details 1.dgn
10/4/2024 3:24:00 PM

CDI CIVIL DESIGN, INC. WBE / DBE EFFINGHAM, IL LICENSE #184.003222

USER NAME =	DESIGNED - NP	REVISED -	
	CHECKED - SJN	REVISED -	
PLOT SCALE =	DRAWN - NP	REVISED -	
PLOT DATE =	CHECKED - SJN	REVISED -	

STATE OF ILLINOIS
DEPARTMENT OF TRANSPORTATION

BRIDGE APPROACH SLAB DETAILS
STRUCTURE NO. 006-0101

SHEET 7 OF 18 SHEETS

F.A.P RTE.	SECTION	COUNTY	TOTAL SHEETS	SHEET NO.
587	(140B)BRR	BUREAU	37	26
		CONTRACT NO. 66P34		
	ILLINOIS	FED. AID PROJECT		

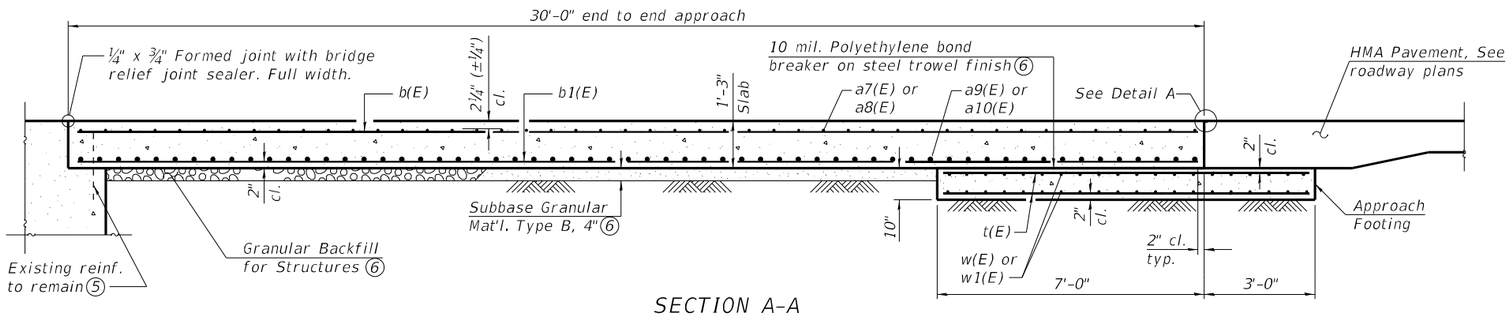

SECTION A-A

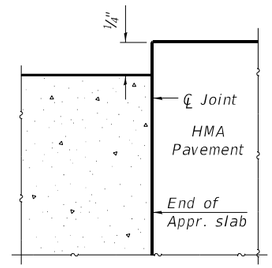

DETAIL A

Notes:

1. Approach slab shall be paid for as Concrete Superstructure (Approach Slab).
2. Approach footing concrete shall be paid for as Concrete Structures.
3. The approach footing maximum applied service bearing pressure (Qmax) = 2.0 ksf.
4. Cost of excavation for approach footing included with Concrete Structures.
5. Existing reinforcement extending into the removal area as shown shall be cleaned, straigthened, and incorporated into the new construction. Any reinforcement bars that are damanged during approach slab removal shall be replaced with an approved bar splicer or anchorage system. Cost shall be included with Approach Slab Removal.
6. Cost included with Concrete Superstructure (Approach Slab).

TWO APPROACHES BILL OF MATERIAL

Bar	No.	Size	Length	Shape
a7(E)	92	#5	10'-9"	
a8(E)	92	#5	12'-9"	
a9(E)	120	#8	10'-9"	
a10(E)	120	#8	12'-9"	
b(E)	74	#5	29'-8"	
b1(E)	116	#9	29'-8"	
t(E)	104	#4	9'-8"	
w(E)	80	#5	10'-9"	
w1(E)	80	#5	12'-9"	
Concrete Superstructure (Approach Slab)			Cu. Yd.	66.7
Concrete Structures			Cu. Yd.	14.8
Reinforcement Bars, Epoxy Coated			Pound	26,410

(Sheet 2 of 2)

MODEL: Default
FILE NAME: P:\5XXX\58XX-59XX\5920 - PTB 205-023 D3 VV_Kuhn Trello\0WV04\24-Structures\CAD - SS10\0060101-66P34-008_Bridge Approach Slab Details 2.dgn

CDI CIVIL DESIGN, INC. WBE / DBE EFFINGHAM, IL LICENSE #184.003222

USER NAME =	DESIGNED - NP	REVISED -	
	CHECKED - SJN	REVISED -	
PLOT SCALE =	DRAWN - NP	REVISED -	
PLOT DATE =	CHECKED - SJN	REVISED -	

STATE OF ILLINOIS
DEPARTMENT OF TRANSPORTATION

BRIDGE APPROACH SLAB DETAILS
STRUCTURE NO. 006-0101

SHEET 8 OF 18 SHEETS

F.A.P RTE.	SECTION	COUNTY	TOTAL SHEETS	SHEET NO.
587	(140B)BRR	BUREAU	37	27
		CONTRACT NO. 66P34		
		ILLINOIS	FED. AID PROJECT	

10/4/2024 3:24:22 PM

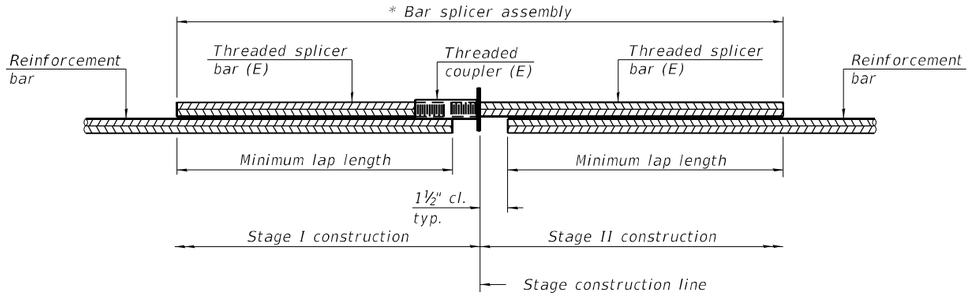

STANDARD BAR SPLICER ASSEMBLY PLAN

Only bar splicer assemblies as presented on the approved QPL list may be used.

Threaded splicer bar length = min. lap length + 1½" + thread length

* Epoxy not required on Bar Splicer Assembly components used in conjunction with black bars.

Location	Bar size	No. assemblies required	Minimum lap length
Deck End	#5	18	3'-6"
Approach End	#6	8	4'-0"
Approach Footing	#5	80	2'-4"
Approach Slab, Top	#5	92	3'-1"
Approach Slab, Bottom	#8	120	4'-9"

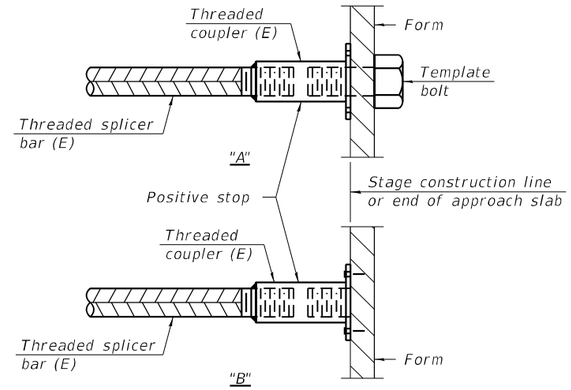

INSTALLATION AND SETTING METHODS

"A" : Set bar splicer assembly by means of a template bolt.
"B" : Set bar splicer assembly by nailing to wood forms or cementing to steel forms.
(E) : Indicates epoxy coating.

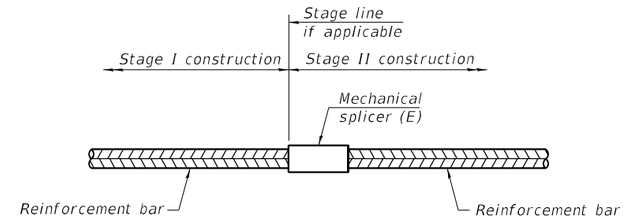

STANDARD MECHANICAL SPLICER

Location	Bar size	No. assemblies required

Notes:
Splicer bars shall be deformed with threaded ends and have a minimum 60 ksi yield strength.
All reinforcement shall be lapped and tied to the splicer bars.
Bar splicer assemblies shall be epoxy coated according to the requirements for reinforcement bars. See Section 508 of the Standard Specifications.
See approved list of bar splicer assemblies and mechanical splicers for alternatives.

BSD-1 2-1-2023

MODEL: Default
FILE NAME: P:\5XX\58XX-59\XX5920 - PTB 205-023 D3 VV_Kuhn Trello\0WO4\24-Structures\CAD - SS10\0060101-66P34-009_Bar Splicer Assembly.dgn
10/4/2024 3:24:43 PM

CDI CIVIL DESIGN,INC. WBE | DBE EFFINGHAM, IL LICENSE #184.003222

USER NAME =	DESIGNED -	REVISED -
	CHECKED -	REVISED -
PLOT SCALE =	DRAWN -	REVISED -
PLOT DATE =	CHECKED -	REVISED -

STATE OF ILLINOIS
DEPARTMENT OF TRANSPORTATION

BAR SPLICERS ASSEMBLY AND MECH. SPLICER DETAILS
STRUCTURE NO. 006-0101

SHEET 9 OF 18 SHEETS

F.A.P RTE.	SECTION	COUNTY	TOTAL SHEETS	SHEET NO.
587	(140B)BRR	BUREAU	37	28
		CONTRACT NO. 66P34		
	ILLINOIS	FED. AID PROJECT		

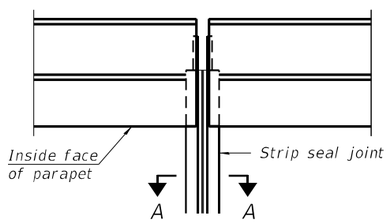

PLAN AT PARAPET

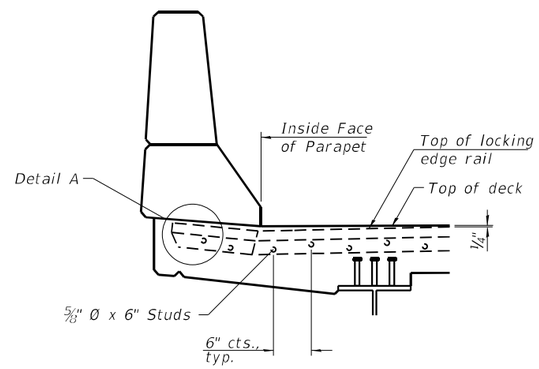

SECTION AT PARAPET

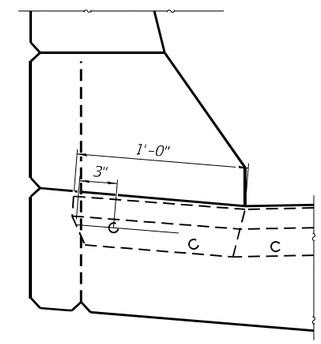

DETAIL A

Notes:

The strip seal shall be made continuous and shall have a minimum thickness of ¼". The configuration of the strip seal shall match the configuration of the locking edge rails. Open or "webbed" strip seal gland configurations are not permitted. The gland shall be sized for a maximum rated movement of 4 inches.

The locking edge rails depicted are configured for typical applications and are conceptual only. The actual configuration of the locking edge rails and matching strip seal may vary from manufacturer to manufacturer provided they fit the application and meet the minimum anchorage shown. Flanged edge rails, however, will not be allowed. Locking edge rails may exceed the 4½" maximum depth provided the anchorage system is revised according to the manufacturer's recommendation.

The manufacturer's recommended installation methods shall be followed.

All steel components shall be galvanized after fabrication according to Article 520.03 of the Standard Specifications.

The Maximum space between locking edge rail segments shall be 3/16" and sealed with a suitable sealant; however, any rail joint within 10' measured perpendicular to the face of the curb or parapet shall be welded as shown in the locking edge rail splice detail.

Cost of parapet sliding plates, embedded plates, and anchorage studs included with Preformed Joint Strip Seal.

The concrete opening below the strip seal will vary based on the locking edge rail chosen by the Contractor. Deck and parapet lengths shown elsewhere in the plans are dimensioned to the concrete opening, not the joint opening, and are based on the rolled locking edge rail. If the Contractor elects to use a different locking edge rail, dimensional adjustments may be required. One exception to this would be the strip seal joint at the end of the precast bridge approach slab. For these cases the pavement connector length shall be adjusted, not the length of the bridge approach slab.

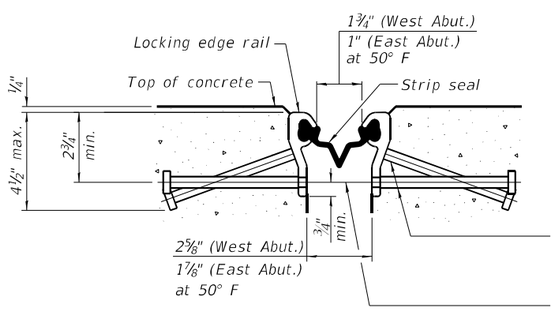

SHOWING ROLLED RAIL JOINT

* ⅝" Ø x 6" studs @ 6" cts. (alternate angled/bent studs with horizontal studs)

⅜" ϕ threaded rods in 7/16" ϕ holes at ±4'-0" cts. for holding the proper joint opening based on the temperature during the deck pour. Place to miss studs. All rods shall be burned, or sawed off flush with the plates after concrete is set.

SECTION A-A

* Granular or solid flux filled headed studs conforming to Article 1006.32 of the Std. Specs., automatically end welded.

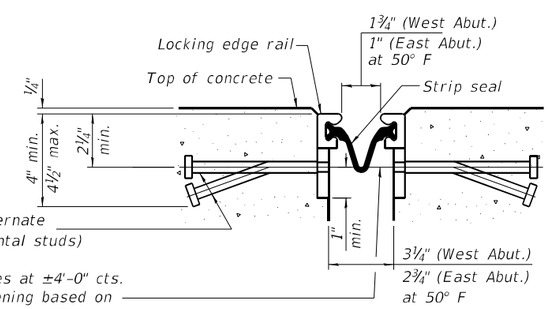

SHOWING WELDED RAIL JOINT

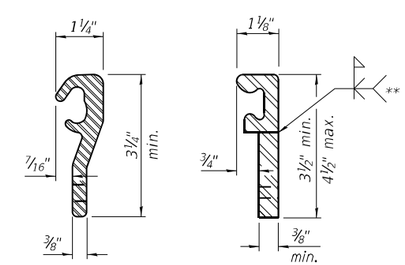

ROLLED (EXTRUDED) RAIL

WELDED RAIL

LOCKING EDGE RAILS

** Back gouge not required if complete joint penetration is verified by mock-up.

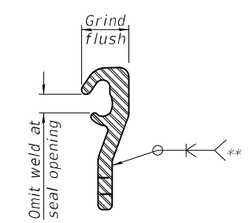

LOCKING EDGE RAIL SPLICE

The inside of the locking edge rail groove shall be free of weld residue. Rolled rail shown, welded rail similar.

BILL OF MATERIAL

Item	Unit	Total
Preformed Joint Strip Seal	Foot	68

MODEL: Default
FILE NAME: P:\5XXX\58XX-59\XX5920 - PTB 205-023 D3 VV_Kuhn Trello\0W04\24-Structures\CAD - SS1010060101-66P34-010_Preformed Joint Strip Seal.dgn

CDI CIVIL DESIGN, INC. WBE / DBE EFFINGHAM, IL LICENSE #184.003222

USER NAME =	DESIGNED - NP	REVISED -	
	CHECKED - SJN	REVISED -	
PLOT SCALE =	DRAWN - NP	REVISED -	
PLOT DATE =	CHECKED - SJN	REVISED -	

STATE OF ILLINOIS
DEPARTMENT OF TRANSPORTATION

PERFORMED JOINT STRIP SEAL
STRUCTURE NO. 006-0101

SHEET 10 OF 18 SHEETS

F.A.P RTE.	SECTION	COUNTY	TOTAL SHEETS	SHEET NO.
587	(140B)BRR	BUREAU	37	29
		CONTRACT NO. 66P34		
	ILLINOIS	FED. AID PROJECT		

10/4/2024 3:25:03 PM

ROUTE NO.	SEC.	COUNTY	TOTAL SHEETS	SHEET NO.
FA 587	140-BR2	BUREAU	24	8
STA. 623+30		TO STA. 629+90		
FED. ROAD DIST. NO.		ILLINOIS	PROJECT	

SHEET NO. 1 OF 14 SHEETS

B.M.= CHISELED SQUARE AT SOUTH-EAST COR. OF EXIST. BRIDGE, STA. 626+88.9 ELEV. 784.63

B.M.= CHISELED SQUARE AT CEMETARY ENTRANCE AT FENCE, WEST SIDE ELEV. 802.28 (CEMETARY EAST OF BRIDGE APPROXIMATELY 1/4 MILE)

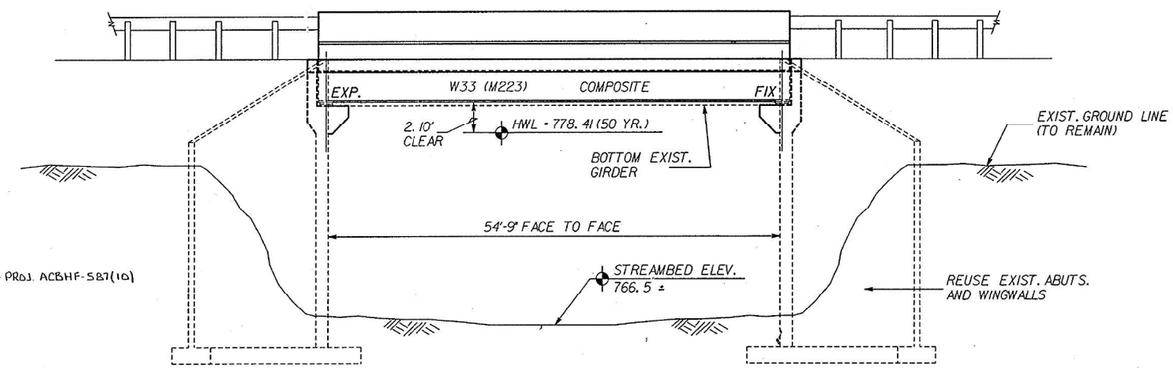

ELEVATION

STATION 626+60.00
BUILT 199 BY
STATE OF ILLINOIS
FA 587 SEC. 140-BR2
LOADING HS-20
STR. NO. 006-0101

PROJ. ACBHF-587(10)

NAME PLATE
(SEE STD. 2113)

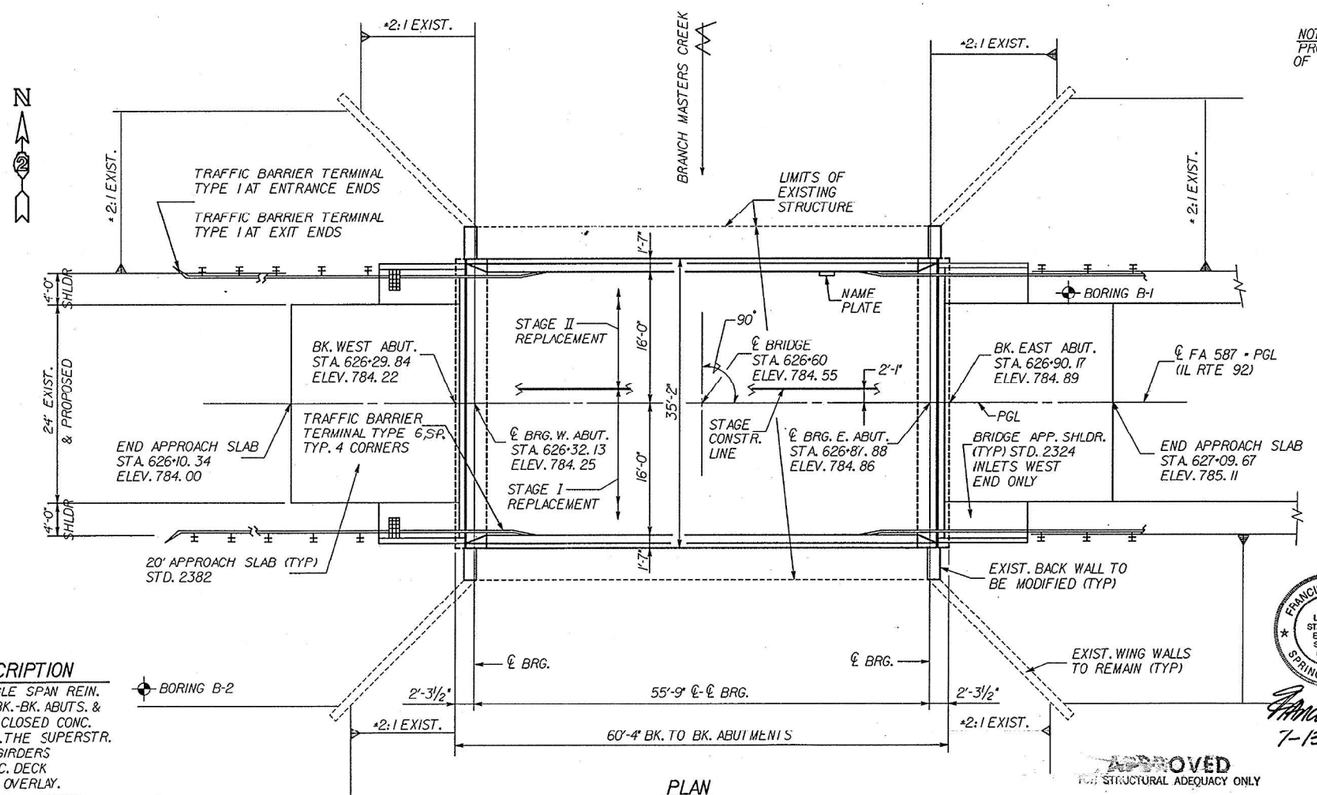

PLAN

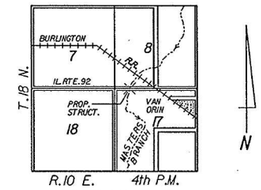

LOCATION MAP

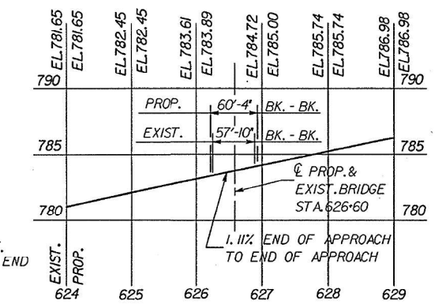

NOTE: MATCH EXIST. PROFILE GRADE @ END OF BIT. TAPERS

PROFILE EXIST. & PROP. IL RTE. 92

CONSTRUCTION SPECIFICATIONS

STATE OF ILLINOIS STANDARD SPECIFICATIONS FOR ROAD AND BRIDGE CONSTRUCTION ADOPTED JULY 1, 1989

STRUCTURE NUMBER

006-0101 (EXIST)

DESIGN STRESSES

f'c = 3,500 psi

fy = 60,000 psi (REINFORCEMENT)

Fy = 50,000 psi (STRUCTURAL AASHTO M223 GRADE 50)

DESIGN LOADING = HS 20-44 (NEW CONSTR.)

DESIGN SPECIFICATIONS - 1989 AASHTO

25 psf ALLOWANCE FOR FUTURE WEARING SURFACE

EXIST. BRIDGE DESCRIPTION

THE EXIST. BRIDGE IS A SINGLE SPAN REIN. CONC. BRIDGE APPROX. 57'-10" BK.-BK. ABUTS. & 43'-4" WIDE. THE BRIDGE HAS CLOSED CONC. ABUTS. BRG. ON TIMBER PILES. THE SUPERSTR. CONSISTS OF 8 REINF. CONC. GIRDERS SUPPORTING A 7½" THICK CONC. DECK THAT HAS AN ASPHALT CONC. OVERLAY.

SUPERSTRUCTURE REMOVAL, REPLACEMENT

EXIST. STRUCTURE NO. 006-0101

FRANCIS J. POWERS 4739 LICENSED STRUCTURAL ENGINEER STATE OF ILLINOIS SPRINGFIELD, ILL.

Francis Powers 7-13-90

APPROVED FOR STRUCTURAL ADEQUACY ONLY

Ralph E. Anderson
Engineer of Bridges and Structures

REVISIONS		
NO.	BY	DATE

DESIGNED BY	FJP
DRAWN BY	GLD
CHECKED BY	FJP
APPROVED BY	FJP

STATE OF ILLINOIS
DEPARTMENT OF TRANSPORTATION

BUREAU COUNTY
FA 587 (IL. RT. 92) OVER BRANCH OF MASTERS CREEK
SECTION 140-BR2
STA. 626+60 SN 006-0101

GENERAL PLAN AND ELEVATION

CMT
CRAWFORD, MURPHY & TILLY, INC.
CONSULTING ENGINEERS
SPRINGFIELD, IL • AURORA, IL • ST. LOUIS, MO

SCALE NONE | JOB NO. 8766-04
DATE 1-89
SHEET OF SHEETS

E:\8766040\PE.FIN

MODEL: Default
FILE NAME: P:\5XXX\58XX\59XX\5920 - PTB 205-023 D3 VV_Kuhn Trello\00\04\24-Structures\CAD - SS10\0060101-66P34-011_Existing Plans - GPE.dgn

CDI CIVIL DESIGN, INC. WBE / DBE EFFINGHAM, IL LICENSE #184.003222	USER NAME =	DESIGNED -	REVISED -
		CHECKED -	REVISED -
	PLOT SCALE =	DRAWN -	REVISED -
	PLOT DATE =	CHECKED -	REVISED -

STATE OF ILLINOIS
DEPARTMENT OF TRANSPORTATION

EXISTING PLAN - GENERAL PLAN AND ELEVATION
STRUCTURE NO. 006-0101
SHEET 11 OF 18 SHEETS

F.A.P RTE.	SECTION	COUNTY	TOTAL SHEETS	SHEET NO.
587	(140B)BRR	BUREAU	37	30
		CONTRACT NO. 66P34		
	ILLINOIS	FED. AID PROJECT		

10/4/2024 3:25:28 PM

ROUTE NO.	SEC.	COUNTY	TOTAL SHEETS	SHEET NO.
FA 587	140-BR2	BUREAU	24	13
STA. 623+30		TO STA. 629+90		
FED. ROAD DIST. NO.	ILLINOIS	PROJECT		

Sheet No. 6 of 14 Sheets

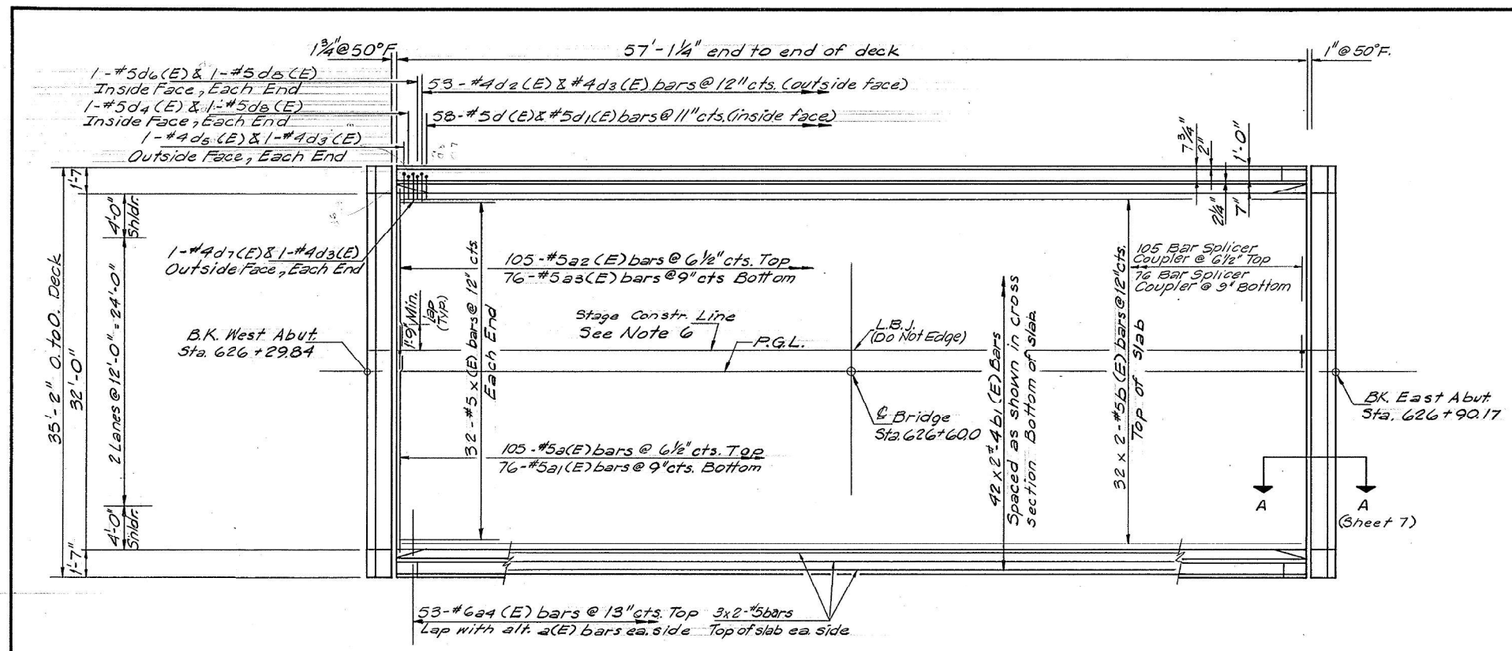

DECK PLAN

MINIMUM BAR LAPS

#4 Bar = 1'-5"
#5 Bar = 1'-9"
#6 Bar = 2'-1"
#8 Bar = 3'-8"

NOTES:

1. See Sheet No. 9 for superstructure details and Bill of Materials.
2. Reinforcement bars designated (E) shall be epoxy coated.
3. Bars indicated thus 20 3-#5 etc. indicates 20 lines of bars with 3 lengths per line.
4. See Sheet No. 9 for parapet reinforcement
5. See Sheet No. 9 for parapet elevations.
6. Bar splicers (E) shall be tied with double the number of ties normally used.
7. For Bar Splicer Coupler, see sheet 8.

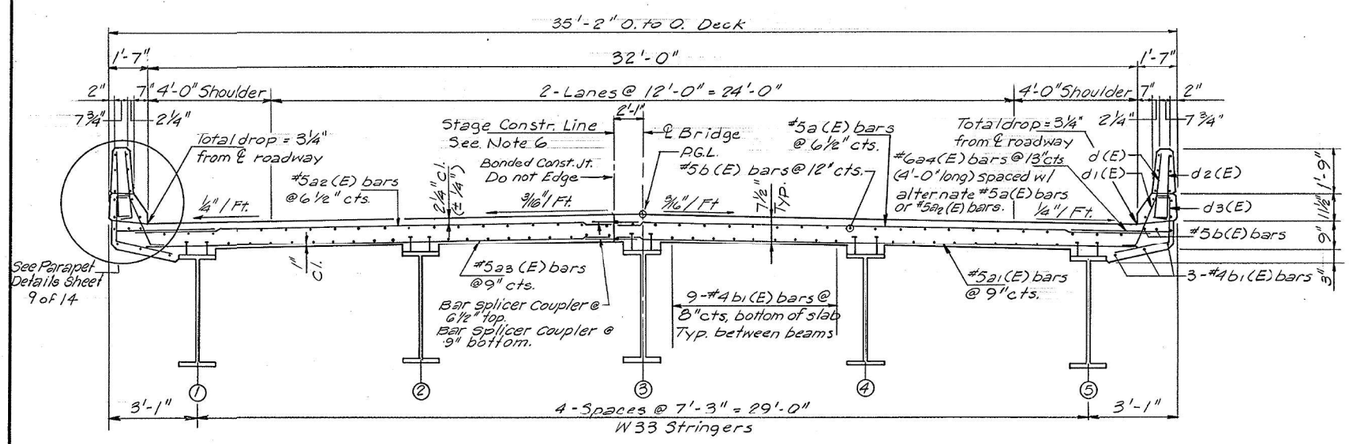

TYPICAL CROSS SECTION

REVISIONS		
NO.	BY	DATE

STATE OF ILLINOIS
DEPARTMENT OF TRANSPORTATION

BUREAU COUNTY
FA 587 (IL. RT. 92) OVER BRANCH OF MASTERS CREEK
SECTION 140-BR2
STA. 626+60 SN 006-0101

SUPERSTRUCTURE

DESIGNED BY	J J F
DRAWN BY	S P M
CHECKED BY	F J P
APPROVED BY	F.J.P.

CMT
CRAWFORD, MURPHY & TILLY, INC.
CONSULTING ENGINEERS
SPRINGFIELD, IL ■ AURORA, IL ■ ST. LOUIS, MO

SCALE NONE | JOB NO. 8766-04
DATE 3-90
SHEET OF SHEETS

MODEL: Default
FILE NAME: P:\XXX\58XX-59XX\5920 - PTB 205-023 D3 VV_Kuhn Trello\0W04\24-Structures\CAD - SS10\0060101-66P34-012_Existing Plans - Superstructure.dgn

CDI
CIVIL DESIGN, INC.
WBE / DBE
EFFINGHAM, IL
LICENSE #184.003222

USER NAME =	DESIGNED -	REVISED -
	CHECKED -	REVISED -
PLOT SCALE =	DRAWN -	REVISED -
PLOT DATE =	CHECKED -	REVISED -

STATE OF ILLINOIS
DEPARTMENT OF TRANSPORTATION

EXISTING PLAN - SUPERSTRUCTURE
STRUCTURE NO. 006-0101
SHEET 12 OF 18 SHEETS

F.A.P RTE.	SECTION	COUNTY	TOTAL SHEETS	SHEET NO.
587	(140B)BRR	BUREAU	37	31
		CONTRACT NO. 66P34		
	ILLINOIS	FED. AID PROJECT		

10/4/2024 3:25:51 PM

ROUTE NO.	SEC.	COUNTY	TOTAL SHEETS	SHEET NO.
FA 587	140-BR	BUREAU	24	16
STA. 623+30		TO STA. 629+90		
FED. ROAD DIST. NO.		ILLINOIS	PROJECT	

Sheet No. 9 of 14 Sheets

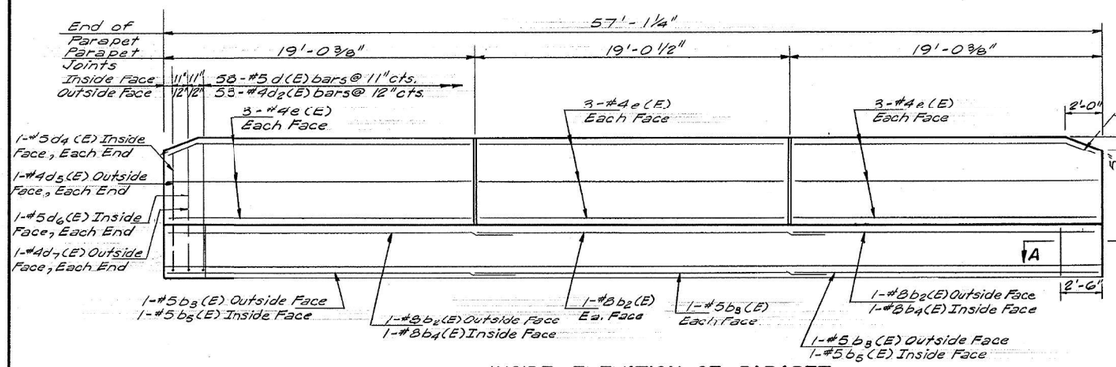

INSIDE ELEVATION OF PARAPET

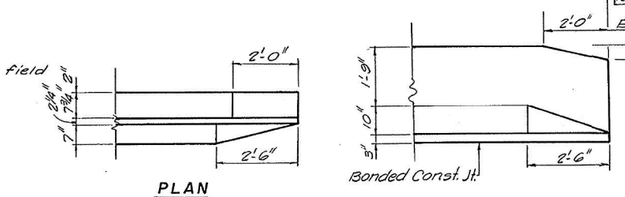

PARAPET TERMINATION DETAIL

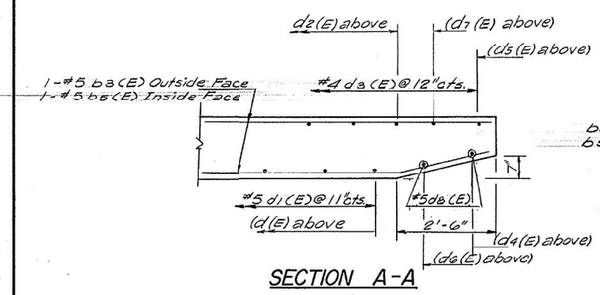

SECTION A-A

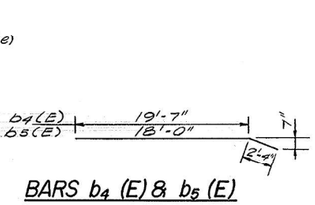

BARS b4 (E) & b5 (E)

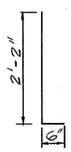

BARS d4 (E) & d5 (E)

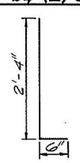

BARS d6 (E) & d7 (E)

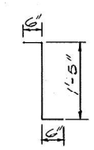

BAR d8 (E)

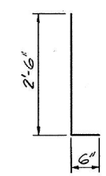

BARS d (E) & d2 (E)

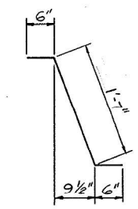

BAR d1 (E)

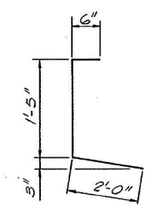

BAR d3 (E)

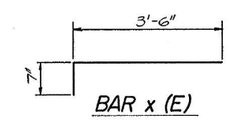

BAR x (E)

SUPERSTRUCTURE BILL OF MATERIAL

Bar	No.	Size	Length	Shape
a (E)	105	#5	19'-0"	
a1 (E)	76	#5	18'-0"	
a2 (E)	105	#5	14'-11"	
a3 (E)	76	#5	13'-11"	
a4 (E)	106	#6	4'-0"	
b (E)	76	#5	29'-1"	
b1 (E)	84	#4	29'-3"	
b2 (E)	8	#8	21'-4"	
b3 (E)	8	#5	20'-3"	
b4 (E)	4	#8	1'-5"	
b5 (E)	4	#5	20'-5"	
d (E)	116	#5	3'-0"	
d1 (E)	116	#5	2'-7"	
d2 (E)	106	#4	3'-0"	
d3 (E)	114	#4	3'-11"	
d4 (E)	4	#5	2'-8"	
d5 (E)	4	#4	2'-8"	
d6 (E)	4	#5	2'-10"	
d7 (E)	4	#4	2'-10"	
d8 (E)	8	#5	2'-5"	
e (E)	36	#4	18'-7"	
x (E)	64	#5	4'-1"	
Class X Concrete Superstructure			Cu. Yds.	59.8
Reinforcement Bars (Epoxy Coated)			Lbs.	13,740
1¾" Preformed Joint Seal			Lin. Ft.	36'
2½" Preformed Joint Seal			Lin. Ft.	36'

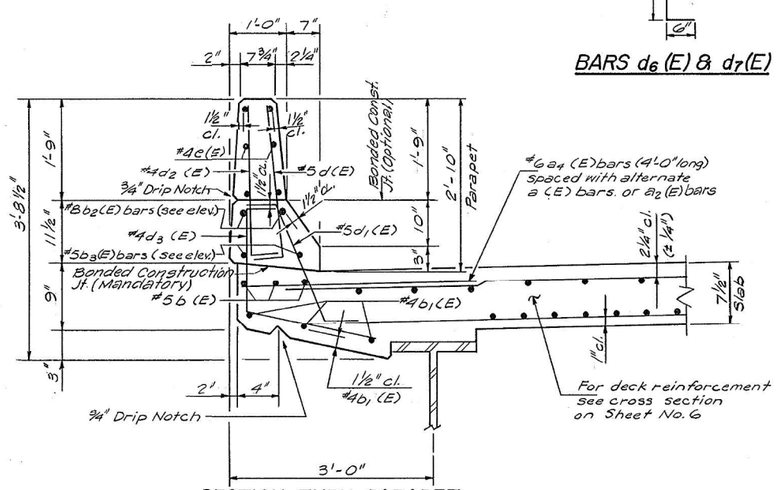

SECTION THRU PARAPET

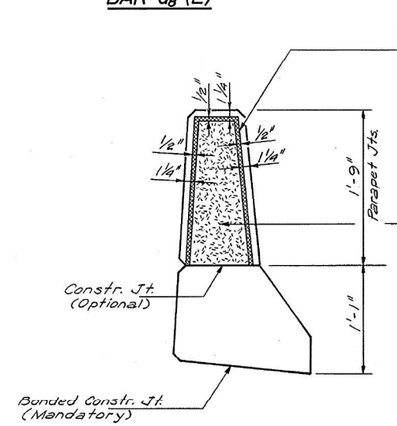

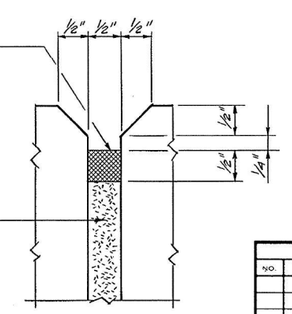

PARAPET JOINT DETAILS

REVISIONS		
NO.	BY	DATE

STATE OF ILLINOIS
DEPARTMENT OF TRANSPORTATION

BUREAU COUNTY
FA 587 (IL. RT. 92) OVER BRANCH OF MASTERS CREEK
SECTION 140-BR 2
STA. 626+60 SN 006-0101

PARAPET DETAILS

DESIGNED BY	J J F
DRAWN BY	S P M
CHECKED BY	F J P
APPROVED BY	F J P

CMT
CRAWFORD, MURPHY & TILLY, INC.
CONSULTING ENGINEERS
SPRINGFIELD, IL ■ AURORA, IL ■ ST. LOUIS, MO

SCALE NONE | DATE 3/90 | JOB NO. 8766-04 | SHEET OF SHEETS

MODEL: Default
FILE NAME: P:\5XXX58XX-59XX15920 - PTB 205-023 D3 VV_Kuhn Trello\0V0424-Structures\CAD - SS10\0060101-66P34-013_Existing Plans - Parapet Details.dgn
10/4/2024 3:26:14 PM

CDI
CIVIL DESIGN, INC.
WBE / DBE
EFFINGHAM, IL
LICENSE #184.003222

USER NAME =	DESIGNED -	REVISED -
	CHECKED -	REVISED -
PLOT SCALE =	DRAWN -	REVISED -
PLOT DATE =	CHECKED -	REVISED -

STATE OF ILLINOIS
DEPARTMENT OF TRANSPORTATION

EXISTING PLANS - PARAPET DETAILS
STRUCTURE NO. 006-0101
SHEET 13 OF 18 SHEETS

F.A.P. RTE.	SECTION	COUNTY	TOTAL SHEETS	SHEET NO.
587	(140B)BRR	BUREAU	37	32
		CONTRACT NO. 66P34		
	ILLINOIS	FED. AID PROJECT		

ROUTE NO.	SEC.	COUNTY	TOTAL SHEETS	SHEET NO.
FA 587	140-BR2	BUREAU	24	14
STA. 623+30		TO STA. 629+90		
FED. ROAD DIST. NO.		ILLINOIS	PROJECT	

SHEET NO. 7 OF 14 SHEETS

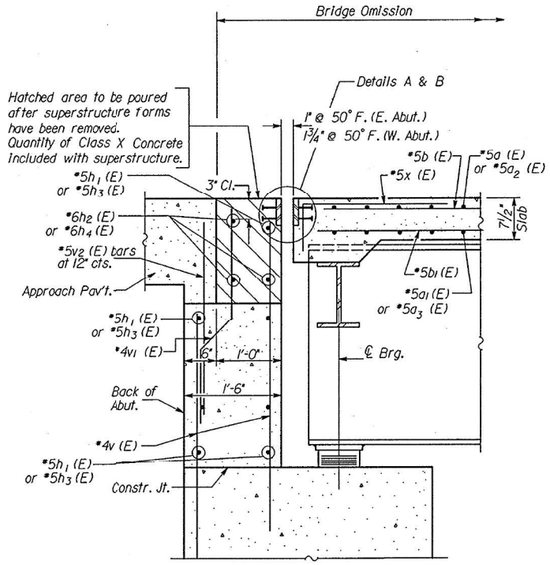

SECTION A - A

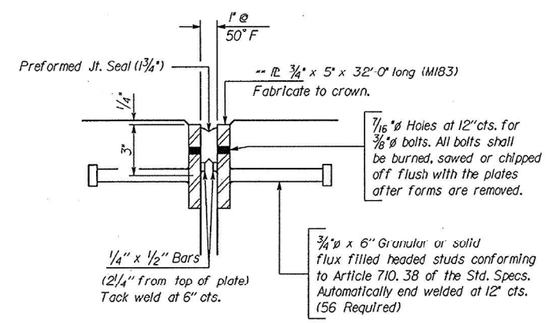

DETAIL A

** Furnish in segments of 20 ft. maximum length. Maximum space between installed segments shall be 3/16". Seal space with Silicone Sealant suitable for Structural Steel.

NOTE: After fabrication all surfaces of the steel plates shall be given one shop coat of paint specified for structural steel.

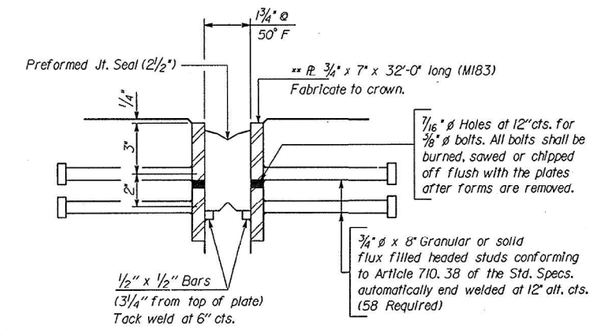

DETAIL B

** Furnish in segments of 20 ft. maximum length. Maximum space between installed segments shall be 3/16". Seal space with Silicone Sealant suitable for Structural Steel.

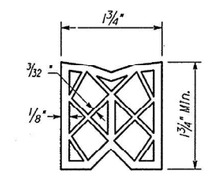

PREFORMED JOINT SEAL (1 3/4") E. Abut.

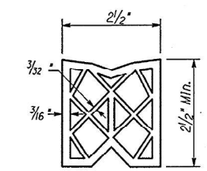

PREFORMED JOINT SEAL (2 1/2") W. Abut.

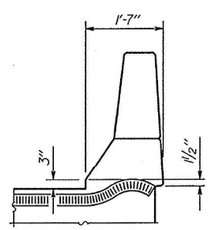

END TREATMENT

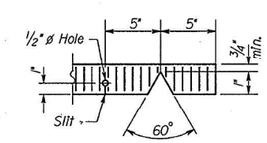

SEAL CUT-OUT

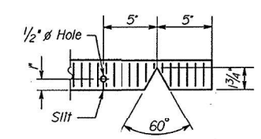

SEAL CUT-OUT

NOTE: After fabrication all surfaces of the steel plates shall be given one shop coat of paint specified for structural steel.

REVISIONS		
NO.	BY	DATE

STATE OF ILLINOIS
DEPARTMENT OF TRANSPORTATION

BUREAU COUNTY
FA587 (IL. RT. 92) OVER BRANCH OF MASTERS CREEK
SECTION 140-BR2
STA. 626+60 SN 006-0101

PREFORMED JOINT SEAL DETAILS

DESIGNED BY	JJF
DRAWN BY	GLD
CHECKED BY	FJP
APPROVED BY	FJP

CMT
CRAWFORD MURPHY & TILLY, INC.
CONSULTING ENGINEERS
SPRINGFIELD, IL • AURORA, IL • ST. LOUIS, MO

SCALE NONE
DATE 3/90
JOB NO. 8766-04
SHEET OF SHEETS

D:\8766030\PJS.MAS

MODEL: Default
FILE NAME: P:\5XXX\58XX-59XX\5920 - PTB 205-023 D3 VV_Kuhn Trello\0W04\24-Structures\CAD - SS10\0060101-66P34-014_Existing Plans - Preformed Joint Seal Details.dgn
10/4/2024 3:26:39 PM

CDI
CIVIL DESIGN, INC.
WBE / DBE
EFFINGHAM, IL
LICENSE #184.003222

USER NAME =	DESIGNED -	REVISED -	
	CHECKED -	REVISED -	
PLOT SCALE =	DRAWN -	REVISED -	
PLOT DATE =	CHECKED -	REVISED -	

STATE OF ILLINOIS
DEPARTMENT OF TRANSPORTATION

EXISTING PLANS - PREFORMED JOINT SEAL DETAILS
STRUCTURE NO. 006-0101
SHEET 14 OF 18 SHEETS

F.A.P RTE.	SECTION	COUNTY	TOTAL SHEETS	SHEET NO.
587	(140B)BRR	BUREAU	37	33
		CONTRACT NO. 66P34		
		ILLINOIS	FED. AID PROJECT	

ROUTE NO.	SEC.	COUNTY	TOTAL SHEETS	SHEET NO.
FA 587	140-BR2	BUREAU	24	20
STA. 623+30		TO STA. 629+90		
FED. ROAD DIST. NO.	ILLINOIS	PROJECT		

Sheet No. 13 of 14 Sheets

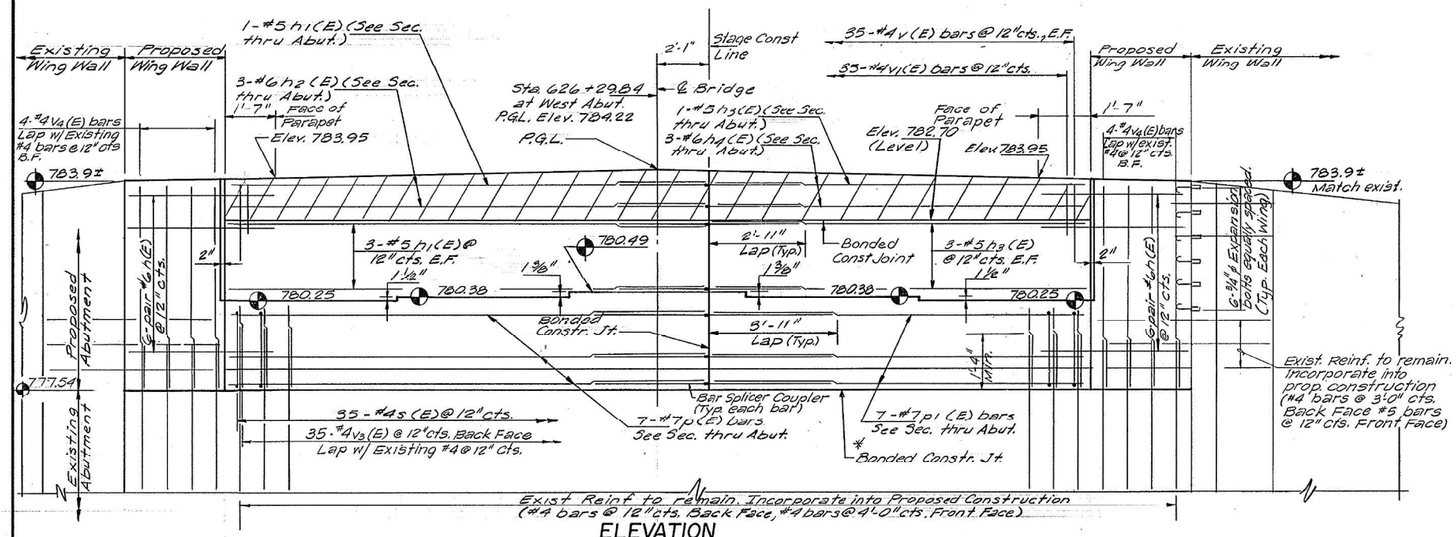

ELEVATION

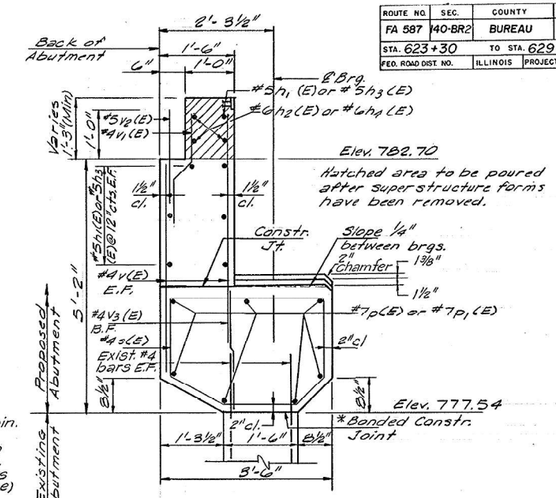

SEC. THRU ABUT.

NOTES:

- Expansion bolts shall consist of self drilling expansion shields and ¾"ø hooked bolts. Hooked bolts shall extend a minimum of 9" into new concrete. Minimum certified proof load = 4080 lbs.

*Bonded Construction Joints shall be in in accordance with Article 504.13 (a) 2 of the Standard Specifications.

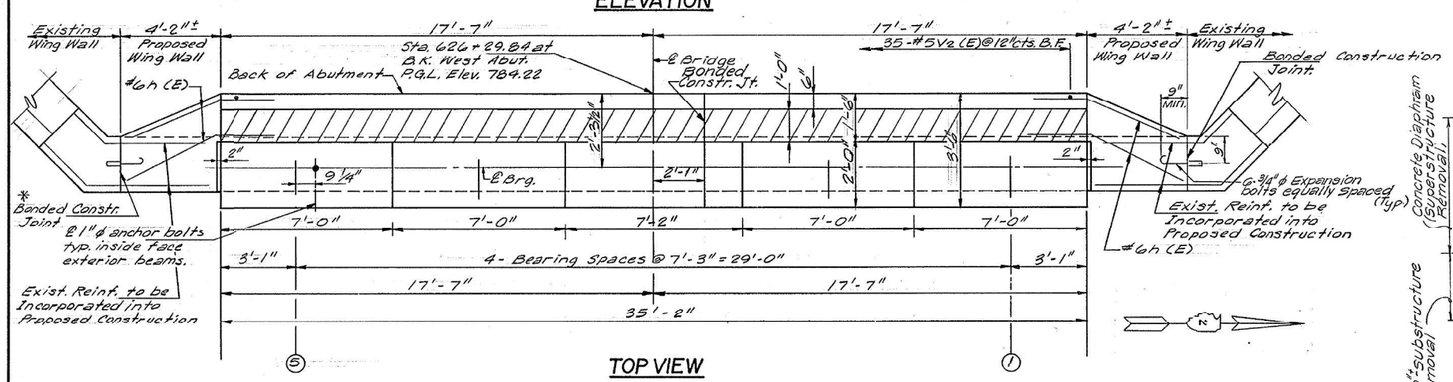

TOP VIEW

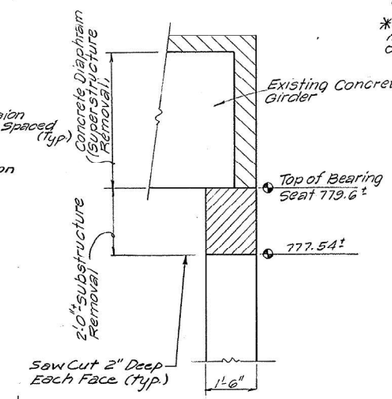

SECTION-EXIST. ABUTMENT

Note: Cost of Bar Splicers is incidental to Reinforcement Bars-Epoxy Coated

WEST ABUT. BILL OF MATERIAL

Bar	No.	Size	Length	Shape
h (E)	24	#6	6'-6"	
h1 (E)	7	#5	22'-7"	
h2 (E)	3	#6	22'-7"	
h3 (E)	7	#5	15'-3"	
h4 (E)	3	#6	15'-3"	
p (E)	7	#7	23'-4"	
p1 (E)	7	#7	15'-3"	
s (E)	35	#4	11'-0"	
v (E)	35	#4	5'-0"	
v1 (E)	35	#4	3'-4"	
v2 (E)	35	#5	3'-0"	
v3 (E)	35	#4	2'-5"	
v4 (E)	8	#4	6'-0"	
Class X Concrete			Cu. Yds.	20.4
Concrete Removal			Cu. Yds.	4.8
Reinforcement Bars, Epoxy Coated			Lbs.	1900
Structure Excavation			Cu. Yds.	100
Expansion Bolts (¾"ø)			Each	12

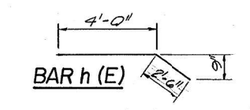

BAR h (E)

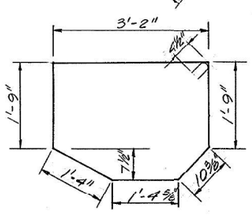

BAR s(E)

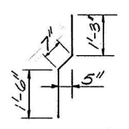

BAR v1(E)

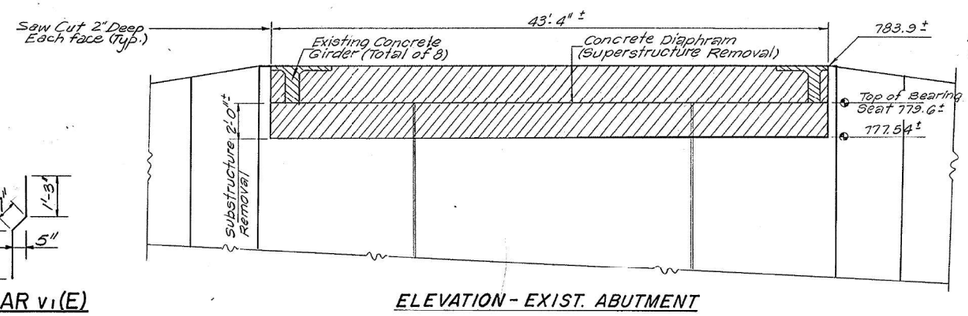

ELEVATION - EXIST. ABUTMENT

REVISIONS		
NO.	BY	DATE

DESIGNED BY JJF
DRAWN BY SPM
CHECKED BY FJP
APPROVED BY FJP

STATE OF ILLINOIS
DEPARTMENT OF TRANSPORTATION

BUREAU COUNTY
FA 587 (IL. RT. 92) OVER BRANCH OF MASTERS CREEK
SECTION 140-BR2:
STA. 626+60 SN 006-0101
WEST ABUTMENT

CMT
CRAWFORD, MURPHY & TILLY, INC.
CONSULTING ENGINEERS
SPRINGFIELD, IL ■ AURORA, IL ■ ST. LOUIS, MO

SCALE NONE
DATE 3-'90
JOB NO. 8766-04
SHEET OF SHEETS

MODEL: Default
FILE NAME: P:\5XXX\58XX-59\XX5920 - PTB 205-023 D3 VV_Kuhn Trello\0W04\24-Structures\CAD - SS10\0066101-66P34-015_Existing Plans- West Abutment.dgn
10/4/2024 3:27:04 PM

CDI
CIVIL DESIGN, INC.
WBE / DBE
EFFINGHAM, IL
LICENSE #184.003222

USER NAME =	DESIGNED -	REVISED -
	CHECKED -	REVISED -
PLOT SCALE =	DRAWN -	REVISED -
PLOT DATE =	CHECKED -	REVISED -

STATE OF ILLINOIS
DEPARTMENT OF TRANSPORTATION

EXISTING PLANS - WEST ABUTMENT
STRUCTURE NO. 006-0101
SHEET 15 OF 18 SHEETS

F.A.P RTE.	SECTION	COUNTY	TOTAL SHEETS	SHEET NO.
587	(140B)BRR	BUREAU	37	34
		CONTRACT NO. 66P34		
		ILLINOIS	FED. AID PROJECT	

ROUTE NO.	SEC.	COUNTY	TOTAL SHEETS	SHEET NO.
FA 587	140-BR2	BUREAU	24	21
STA. 623+30		TO STA. 629+90		
FED. ROAD DIST NO.		ILLINOIS	PROJECT	

Sheet No.14 of 14 Sheets

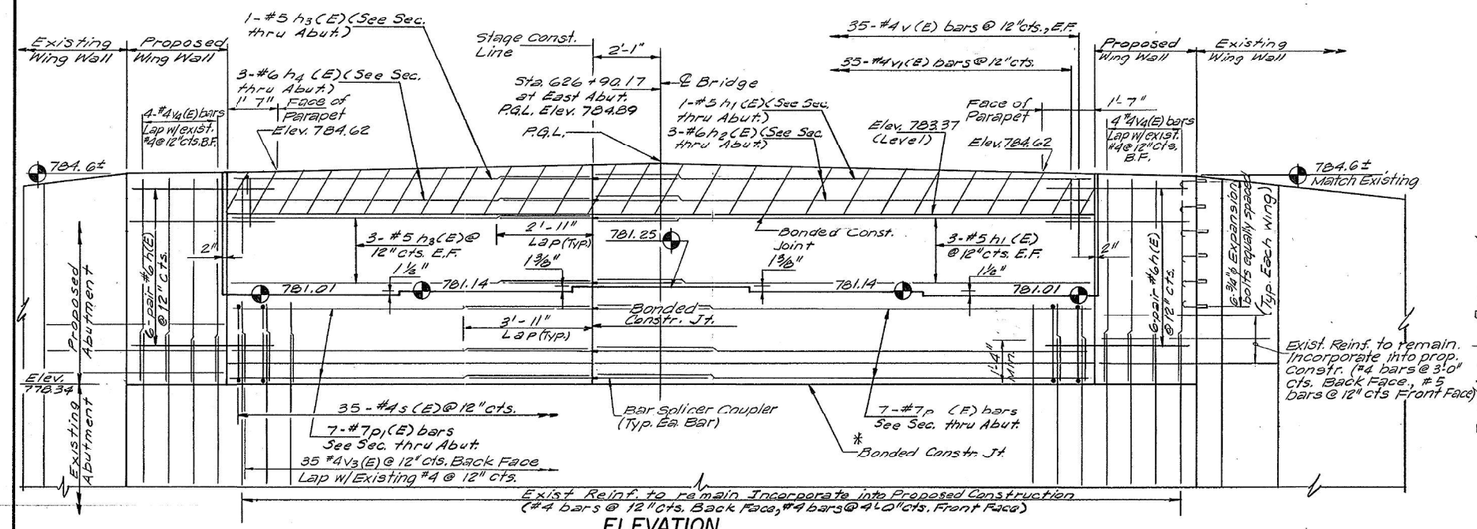

ELEVATION

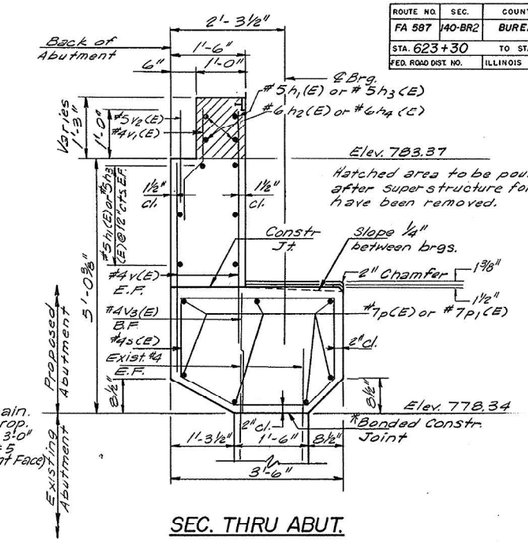

SEC. THRU ABUT.

NOTES:

- Expansion bolts shall consist of self drilling expansion shields and ¾" ϕ hooked bolts. Hooked bolts shall extend a minimum of 9" into new concrete. Minimum certified proof load = 4080 lbs.

*Bonded construction Joint shall be in accordance with Article 504.13 (a) 2 of the Standard Specifications.

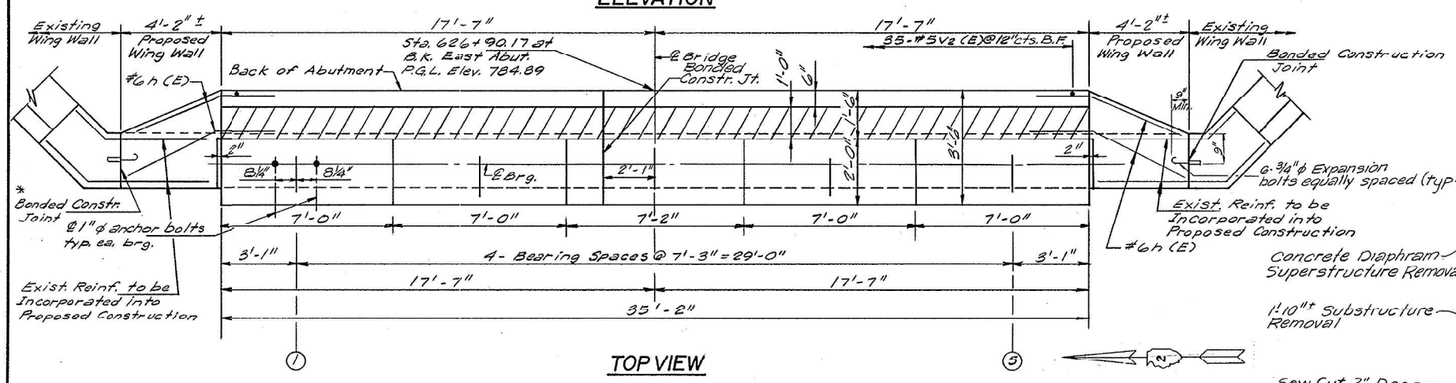

TOP VIEW

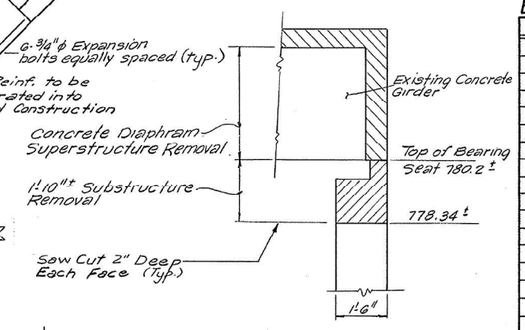

SECTION-EXIST. ABUTMENT

EAST ABUT. BILL OF MATERIAL

Bar	No.	Size	Length	Shape
h (E)	24	#6	6'-6"	
h1(E)	7	#5	22'-4"	
h2(E)	3	#6	22'-4"	
h3(E)	7	#5	15'-3"	
h4(E)	3	#6	15'-3"	
p (E)	7	#7	23'-4"	
p1(E)	7	#7	15'-3"	
s (E)	35	#4	11'-0"	
v (E)	35	#4	5'-0"	
v1(E)	35	#4	3'-4"	
v2(E)	35	#5	3'-0"	
v3(E)	35	#4	2'-5"	
v4(E)	8	#4	6'-0"	
Class X Concrete			Cu. Yds.	20.1
Concrete Removal			Lbs.	4.4
Reinforcement Bars, Epoxy Coated			Lbs.	1900
Structure Excavation			Cu. Yds.	100
Expansion Bolts (¾" ϕ)			Each	12

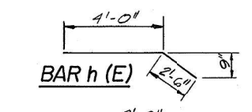

BAR h (E)

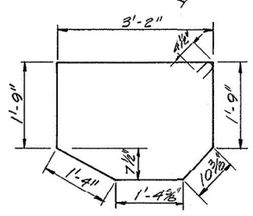

BAR s(E)

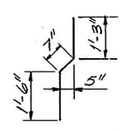

BAR v1(E)

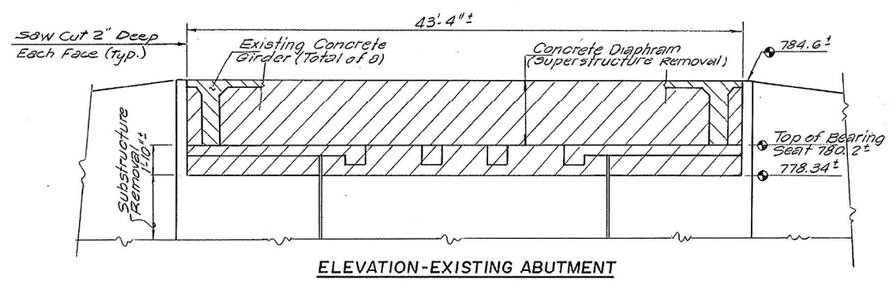

ELEVATION-EXISTING ABUTMENT

Note: Cost of Bar Splicers is incidental to Reinforcement Bars Epoxy Coated.

REVISIONS		
NO.	BY	DATE

DESIGNED BY	JJF
DRAWN BY	SPM
CHECKED BY	FJP
APPROVED BY	FJP

STATE OF ILLINOIS
DEPARTMENT OF TRANSPORTATION

BUREAU COUNTY
FA 587 (IL. RT. 92.) OVER BRANCH OF MASTERS CREEK
SECTION 140-BR2
STA. 626+60 SN 006-0101

EAST ABUTMENT

CMT
CRAWFORD, MURPHY & TILLY, INC.
CONSULTING ENGINEERS
SPRINGFIELD, IL ■ AURORA, IL ■ ST. LOUIS, MO

SCALE NONE	JOB NO. 8766-04
DATE 3-'90	
SHEET OF SHEETS	

MODEL: Default
FILE NAME: P:\5XXX\58XX-59XX\5920 - PTB 205-023 D3 VV_Kuhn Trello\0W04\24-Structures\CAD - SS1000060101-66P34-016_Existing Plans - East Abutment.dgn

CDI
CIVIL DESIGN, INC.
WBE / DBE
EFFINGHAM, IL
LICENSE #184.003222

USER NAME =	DESIGNED -	REVISED -
	CHECKED -	REVISED -
PLOT SCALE =	DRAWN -	REVISED -
PLOT DATE =	CHECKED -	REVISED -

STATE OF ILLINOIS
DEPARTMENT OF TRANSPORTATION

EXISTING PLANS - EAST ABUTMENT
STRUCTURE NO. 006-0101
SHEET 16 OF 18 SHEETS

F.A.P RTE.	SECTION	COUNTY	TOTAL SHEETS	SHEET NO.
587	(140B)BRR	BUREAU	37	35
		CONTRACT NO. 66P34		
		ILLINOIS	FED. AID PROJECT	

10/4/2024 3:27:28 PM

STATE OF ILLINOIS
DEPARTMENT OF PUBLIC WORKS & BUILDINGS
DIVISION OF HIGHWAYS

ROAD DIST. NO.	SECTION	COUNTY	TOTAL SHEETS	SHEET NO.
92	140B-7	Bureau	4	6
FED. ROAD DIST. NO. 7	ILLINOIS	FED. AID PROJECT-		

SHEET NO. 2
2 SHEETS

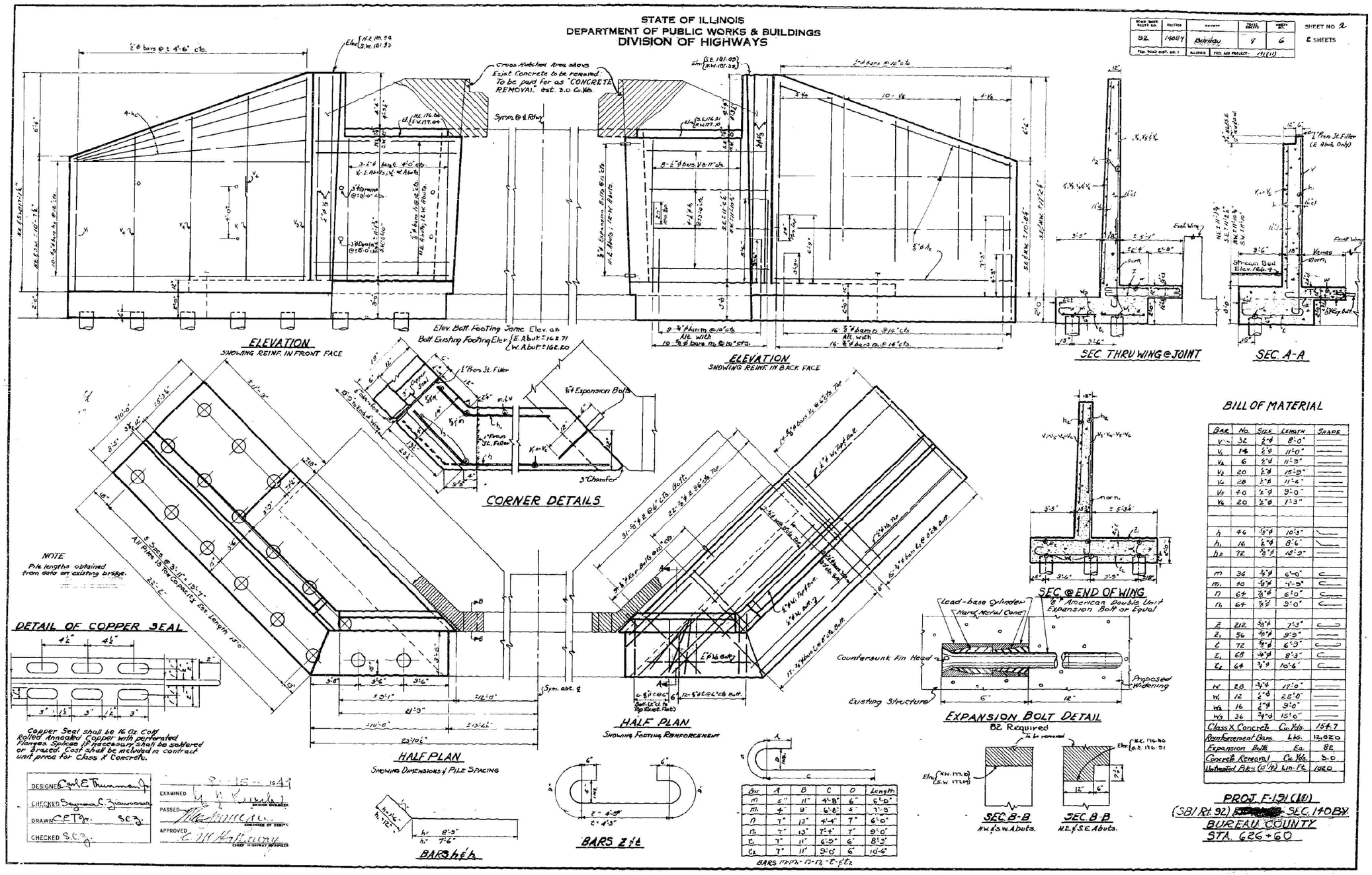

BILL OF MATERIAL

BAR	NO.	SIZE	LENGTH	SHAPE
V	32	5/8 ϕ	8'-0"	
V1	14	5/8 ϕ	11'-0"	
V2	6	5/8 ϕ	11'-9"	
V3	20	5/8 ϕ	15'-9"	
V4	28	5/8 ϕ	11'-6"	
V5	40	5/8 ϕ	9'-0"	
V6	20	5/8 ϕ	7'-3"	
h	46	5/8 ϕ	10'-3"	
h1	16	5/8 ϕ	8'-6"	
h2	72	5/8 ϕ	10'-9"	
m	36	3/4 ϕ	6'-0"	
m1	20	3/4 ϕ	7'-9"	
n	64	3/4 ϕ	6'-0"	
n1	64	3/4 ϕ	9'-0"	
Z	212	3/4 ϕ	7'-3"	
Z1	56	3/4 ϕ	9'-9"	
Z	72	3/4 ϕ	6'-3"	
Z1	68	3/4 ϕ	8'-3"	
Z2	64	3/4 ϕ	10'-6"	
W	28	3/4 ϕ	17'-0"	
W1	12	5/8 ϕ	22'-0"	
W2	16	5/8 ϕ	9'-0"	
W3	36	3/4 ϕ	15'-0"	
Class X Concrete			Cu. Yds.	154.7
Reinforcement Bars			Lbs.	12,020
Expansion Bolts			Ea.	82
Concrete Removal			Cu. Yds.	3.0
Unwatered Piles (5 1/2)			Lin. Ft.	1020

Bar	A	B	C	D	Length
m	5"	11"	4'-8"	6"	6'-0"
m1	4"	8"	6'-8"	5"	7'-9"
n	7"	13"	4'-4"	7"	6'-0"
n1	7"	13"	7'-4"	7"	9'-0"
Z	7"	11"	6'-9"	6"	8'-3"
Z2	7"	11"	9'-0"	6"	10'-6"

BARS m, m1, n, n1, Z, Z1, Z2

PROJ. F-131 (81)
(SB1 Rt. 92) SEC. 140B-7
BUREAU COUNTY
STA. 626+60

DESIGNED Carl E. Thurmond
CHECKED Seymour C. Zimmerman
DRAWN C.E.T. Jr. S.C.Z.
CHECKED S.C.Z.
EXAMINED 8-15-1949
PASSED
APPROVED
BRIDGE ENGINEER
ENGINEER OF DESIGN
CHIEF HIGHWAY ENGINEER

11 (52742—500)

B.M. — Sp. & W. in 40" Maple 27' Rt. of 629+29. El. 184.40
Existing structure — Pony truss, 47'-3" span, 14' rdy.,
to be removed by bridge contractor.

STATE OF ILLINOIS
DEPARTMENT OF PUBLIC WORKS AND BUILDINGS
DIVISION OF HIGHWAYS

R. C. ABUTMENTS FOR DECK GIRDER BRIDGE
HEIGHT OVER ALL 18 FEET 8 INCHES

ROUTE	SEC.	COUNTY	TOTAL SHEETS	SHEET NO.
92	D140 B	Bureau	71	61

FED. ROAD DIST. NO. 7 | ILLINOIS | FED. AID PROJECT 191

Sheet No. 2
2 Sheets.

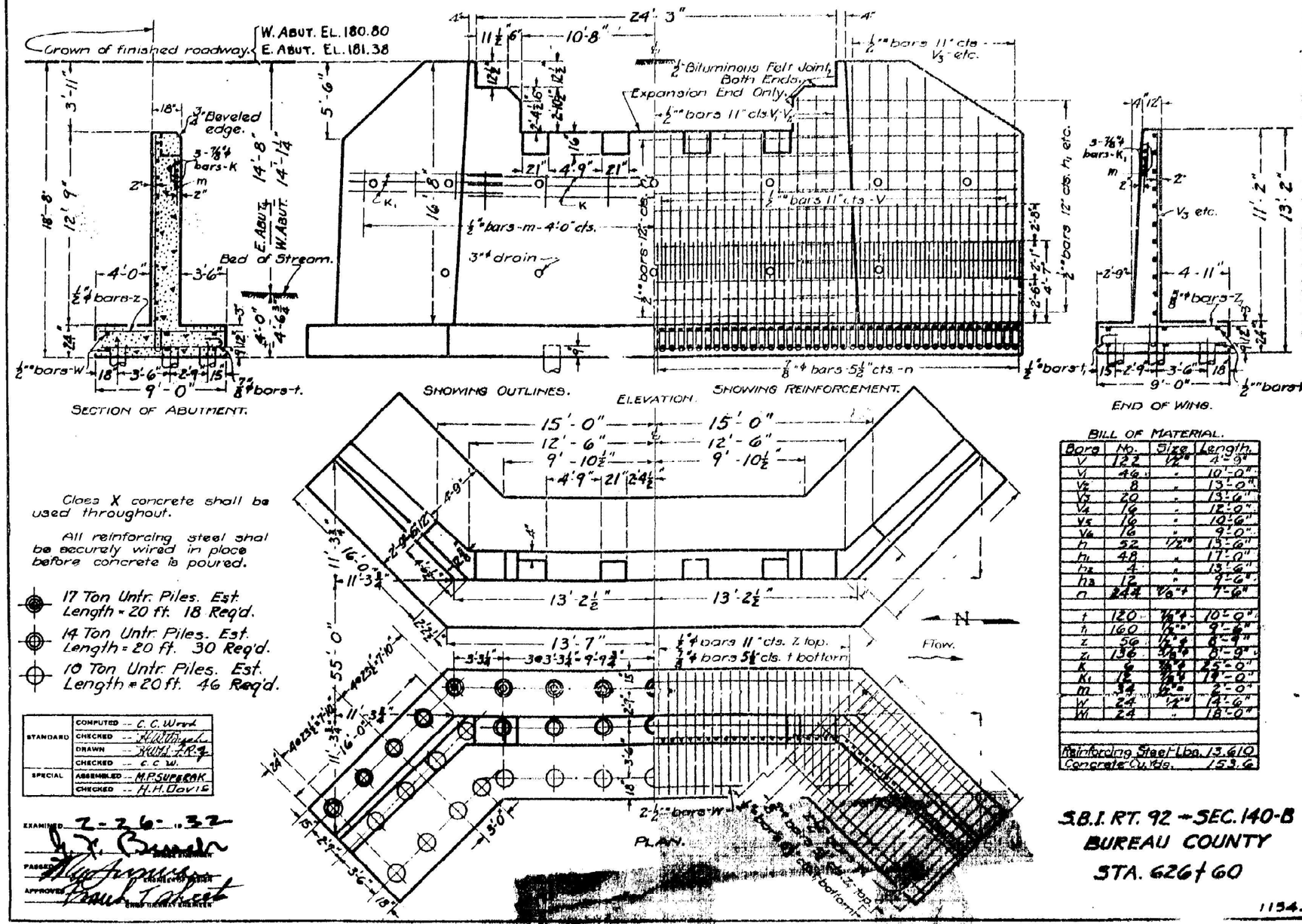

Class X concrete shall be used throughout.

All reinforcing steel shal be securely wired in place before concrete is poured.

17 Ton Untr. Piles. Est. Length = 20 ft. 18 Req'd.

14 Ton Untr. Piles. Est. Length = 20 ft. 30 Req'd.

10 Ton Untr. Piles. Est. Length = 20 ft. 46 Req'd.

BILL OF MATERIAL.

Bars	No.	Size	Length
V	122	1/2"ϕ	4'-9"
V1	46	"	10'-0"
V2	8	"	13'-0"
V3	20	"	13'-6"
V4	16	"	12'-0"
V5	16	"	10'-6"
V6	16	"	9'-0"
h	52	1/2"ϕ	15'-6"
h1	48	"	17'-0"
h2	4	"	13'-6"
h3	12	"	9'-6"
n	244	7/8"ϕ	7'-6"
t	120	7/8"ϕ	10'-0"
t1	160	7/8"ϕ	9'-6"
z	56	1/2"ϕ	6'-9"
z1	136	1/2"ϕ	8'-9"
K	8	3/4"ϕ	25'-0"
K1	12	3/4"ϕ	19'-0"
m	34	1/2"ϕ	2'-0"
W	24	1/2"ϕ	12'-6"
M	24	"	18'-0"
Reinforcing Steel-Lbs.			13,610
Concrete-Cu. Yds.			153.6

STANDARD	
COMPUTED	C. C. Wrent
CHECKED	[illegible]
DRAWN	[illegible]
CHECKED	C. C. W.
SPECIAL	
ASSEMBLED	M. P. SUPERAK
CHECKED	H. H. Davis

EXAMINED 2-26-1932
[illegible] ENGINEER OF BRIDGES
PASSED [illegible] ENGINEER OF DESIGN
APPROVED [illegible] CHIEF HIGHWAY ENGINEER

S.B.I. RT. 92 — SEC. 140-B
BUREAU COUNTY
STA. 626+60

1154.

11 (52742—500)

MODEL: Default
FILE NAME: P:\5XXX58XX-59XX\5920 - PTB 205-023 D3 VV_Kuhn Trello\0V04\24-Structures\CAD - SS100060101-66P34-018_Existing Plans - Substructure 1932.dgn
10/4/2024 3:28:21 PM

CDI — CIVIL DESIGN, INC. WBE / DBE — EFFINGHAM, IL — LICENSE #184.003222

USER NAME =	DESIGNED -	REVISED -
	CHECKED -	REVISED -
PLOT SCALE =	DRAWN -	REVISED -
PLOT DATE =	CHECKED -	REVISED -

STATE OF ILLINOIS
DEPARTMENT OF TRANSPORTATION

EXISTING PLANS - SUBSTRUCTURE
STRUCTURE NO. 006-0101
SHEET 18 OF 18 SHEETS

F.A.P. RTE.	SECTION	COUNTY	TOTAL SHEETS	SHEET NO.
587	(140B)BRR	BUREAU	37	37
		CONTRACT NO. 66P34		
		ILLINOIS	FED. AID PROJECT	