NOTES:
1. Space reinforcement in cap to miss anchor bolts.
2. Pour steps monolithically with cap.
3. Existing column reinforcement shall be cleaned and incorporated into new construction. Cost included in Concrete Removal.
4. Bars noted thus, 12x2 - #8 indicates 12 lines of bars with 2 lengths of bars per line.

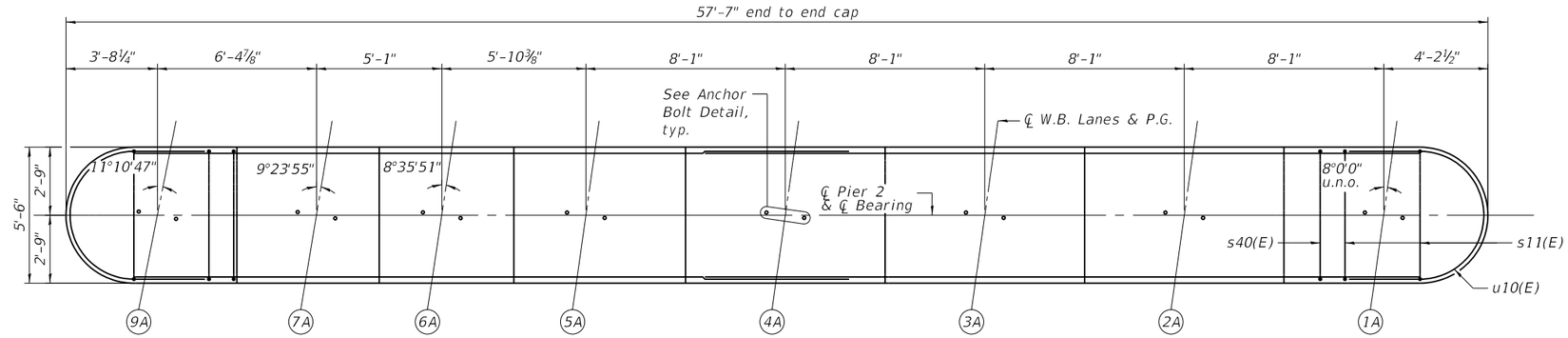

PLAN

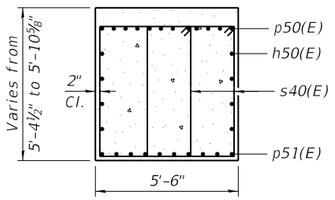

SECTION A-A

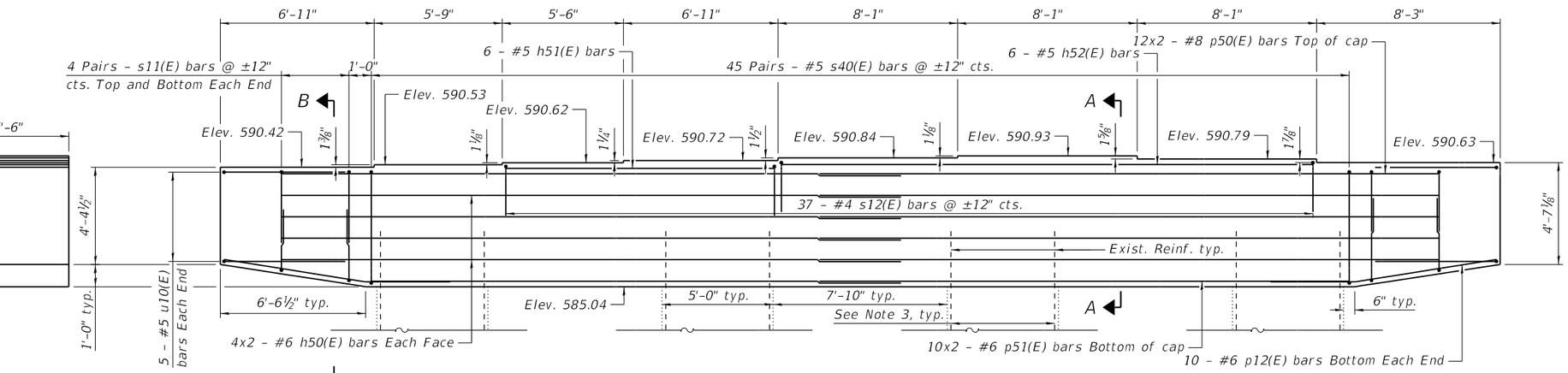

ELEVATION
(Looking East)

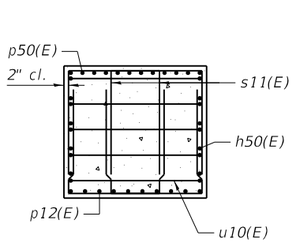

SECTION B-B

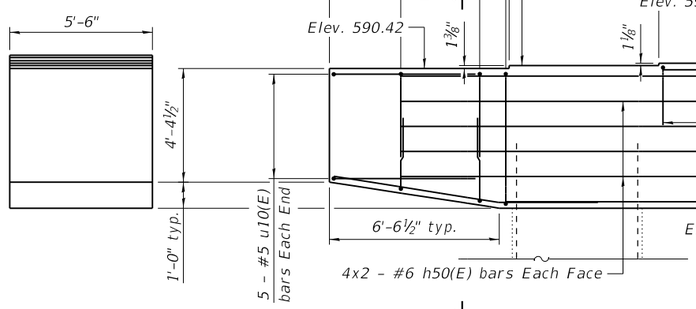

END VIEW

BAR LAP LENGTHS
#6 h50(E) bars 4'-4"
#8 p50(E) bars 8'-2"
#6 p51(E) bars 3'-10"

BILL OF MATERIAL

Bar	No.	Size	Length	Shape
h50(E)	16	#6	28'-3"	
h51(E)	6	#5	12'-3"	
h52(E)	6	#5	23'-11"	
p12(E)	20	#6	10'-3"	
p50(E)	24	#8	30'-2"	
p51(E)	20	#6	24'-2"	
s11(E)	32	#5	11'-6"	
s12(E)	37	#4	9'-2"	
s40(E)	90	#5	17'-11"	
u10(E)	10	#5	14'-6"	

Item	Unit	Total
Concrete Structures	Cu. Yd.	63.9
Reinforcement Bars, Epoxy Coated	Pound	6320

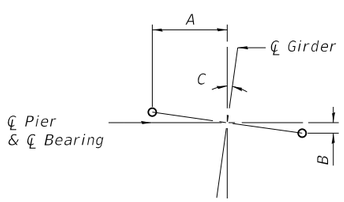

ANCHOR BOLT DETAIL

Beam	A	B	C
1A	9 3/16"	1 5/16"	8.000°
2A	9 3/16"	1 3/16"	8.000°
3A	9 3/16"	1 5/16"	8.000°
4A	9 3/16"	1 5/16"	8.000°
5A	9 3/16"	1 5/16"	8.000°
6A	9⅛"	1⅜"	8.598°
7A	9⅛"	1½"	9.399°
9A	9 1/16"	1 13/16"	11.180°

A, B, & C DIMENSIONS

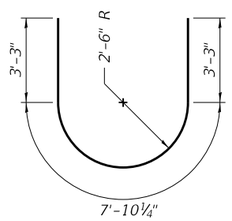

BAR u10(E)

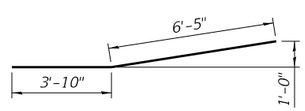

BAR p12(E)

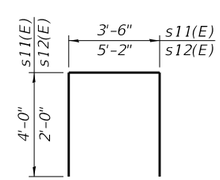

BAR s11(E) & s12(E)

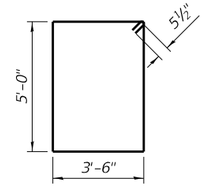

BAR s40(E)

QUIGG ENGINEERING INC

USER NAME =	DESIGNED - KWB	REVISED -	
	CHECKED - KFO	REVISED -	
PLOT SCALE =	DRAWN - LMC	REVISED -	
PLOT DATE = 10/4/2019	CHECKED - MDC	REVISED -	

STATE OF ILLINOIS
DEPARTMENT OF TRANSPORTATION

WESTBOUND PIER 2
SN 050-0221

SHEET S76 OF 80 SHEETS

F.A. RTE.	SECTION	COUNTY	TOTAL SHEETS	SHEET NO.
80	(50-2BR)ES	LASALLE	328	201

CONTRACT NO. 66H21
ILLINOIS FED. AID PROJECT

MODEL: Default
FILE NAME: S:\2017\17IL021 Various Phase I-II IDOT D3-Graef PTB 184-017\Work Order 5 - I-80 Bridge PH-2\CADD\CADD Sheets\(19) 66H21 - WB Pier 2 - Details.dgn
10/15/2019 8:41:27 AM

NOTES:
1. Space reinforcement in cap to miss anchor bolts.
2. Pour steps monolithically with cap.
3. Existing column reinforcement shall be cleaned and incorporated into new construction. Cost included in Concrete Removal.
4. Bars noted thus, 12x2 - #8 indicates 12 lines of bars with 2 lengths of bars per line.

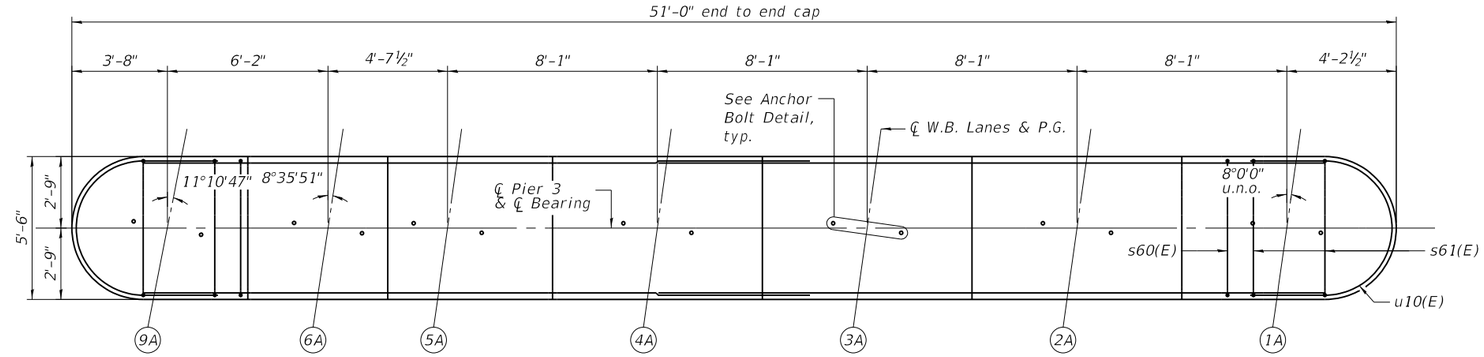

PLAN

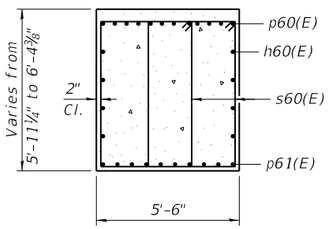

SECTION A-A

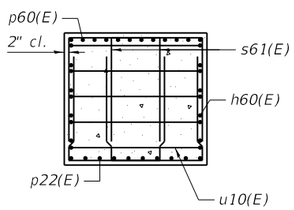

SECTION B-B

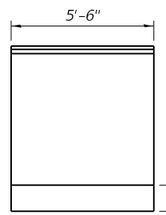

END VIEW

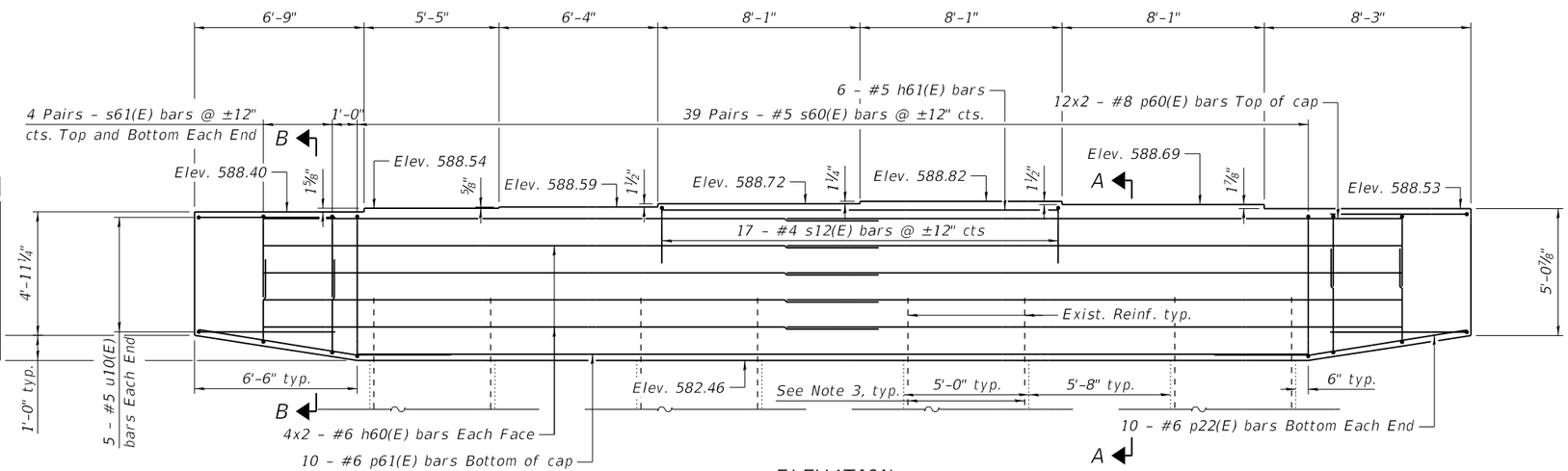

ELEVATION
(Looking East)

BAR LAP LENGTHS
#6 h60(E) bars 4'-4"
#8 p60(E) bars 8'-2"

BILL OF MATERIAL

Bar	No.	Size	Length	Shape
h60(E)	16	#6	24'-11"	
h61(E)	6	#5	15'-10"	
p22(E)	20	#6	10'-2"	
p60(E)	24	#8	26'-10"	
p61(E)	10	#6	38'-0"	
s12(E)	17	#5	9'-2"	
s60(E)	78	#5	19'-1"	
s61(E)	32	#5	12'-2"	
u10(E)	10	#5	14'-6"	

Item	Unit	Total
Concrete Structures	Cu. Yd.	61.4
Reinforcement Bars, Epoxy Coated	Pound	5360

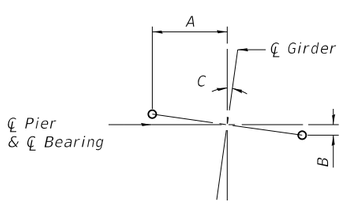

ANCHOR BOLT DETAIL

Beam	A	B	C
1A	1'-3¾"	2 3/16"	8.000°
2A	1'-3¾"	2 3/16"	8.000°
3A	1'-3¾"	2 3/16"	8.000°
4A	1'-3¾"	2 3/16"	8.000°
5A	1'-3¾"	2 3/16"	8.000°
6A	1'-3 11/16"	2⅜"	8.598°
9A	1'-3 9/16"	3 1/16"	11.180°

A, B, & C DIMENSIONS

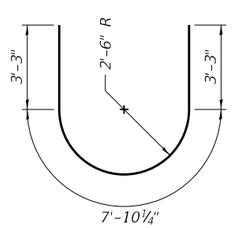

BAR u10(E)

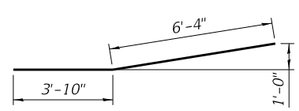

BAR p22(E)

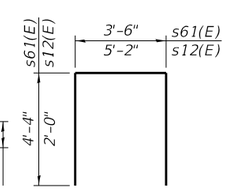

BAR s61(E) & s12(E)

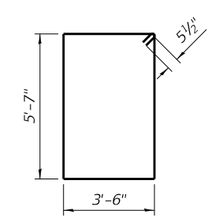

BAR s60(E)

QUIGG ENGINEERING INC	USER NAME =	DESIGNED - KWB	REVISED -
		CHECKED - KFO	REVISED -
	PLOT SCALE =	DRAWN - LMC	REVISED -
	PLOT DATE = 10/4/2019	CHECKED - MDC	REVISED -

STATE OF ILLINOIS
DEPARTMENT OF TRANSPORTATION

WESTBOUND PIER 3
SN 050-0221

SHEET S77 OF 80 SHEETS

F.A. RTE.	SECTION	COUNTY	TOTAL SHEETS	SHEET NO.
80	(50-2BR)ES	LASALLE	328	202

CONTRACT NO. 66H21

ILLINOIS | FED. AID PROJECT

MODEL: Default
FILE NAME: S:\2017\17IL021 Various Phase I-II IDOT D3-Graef PTB 184-017\Work Order 5 - I-80 Bridge PH-2\CADD\CADD Sheets\(20) 66H21 - WB Pier 3 - Details.dgn
10/15/2019 8:41:28 AM

NOTES:
1. Space reinforcement in cap to miss anchor bolts.
2. Pour steps monolithically with cap.
3. Existing column reinforcement shall be cleaned and incorporated into new construction. Cost included in Concrete Removal.
4. Bars noted thus, 12x2 - #8 indicates 12 lines of bars with 2 lengths of bars per line.

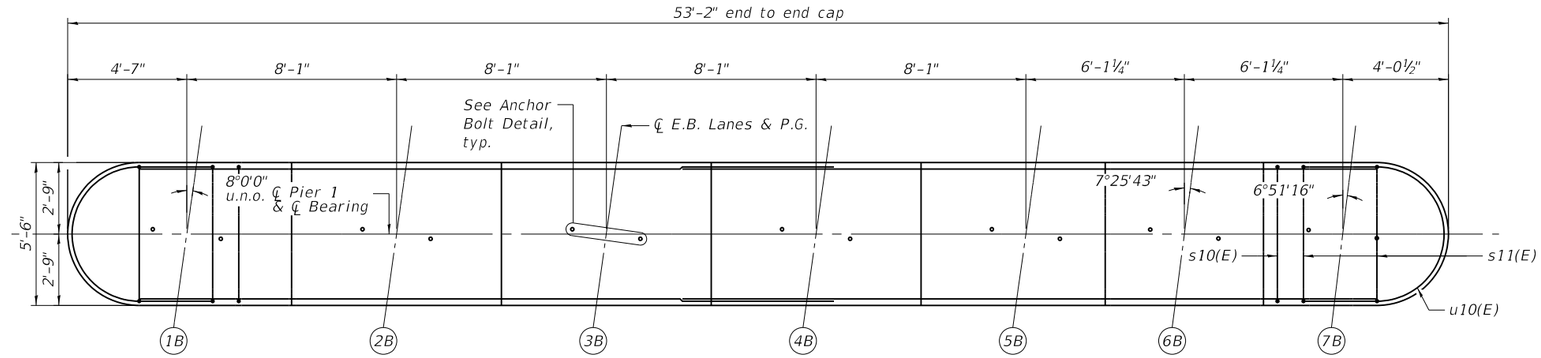

PLAN

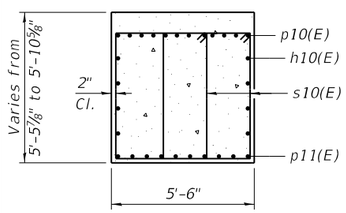

SECTION A-A

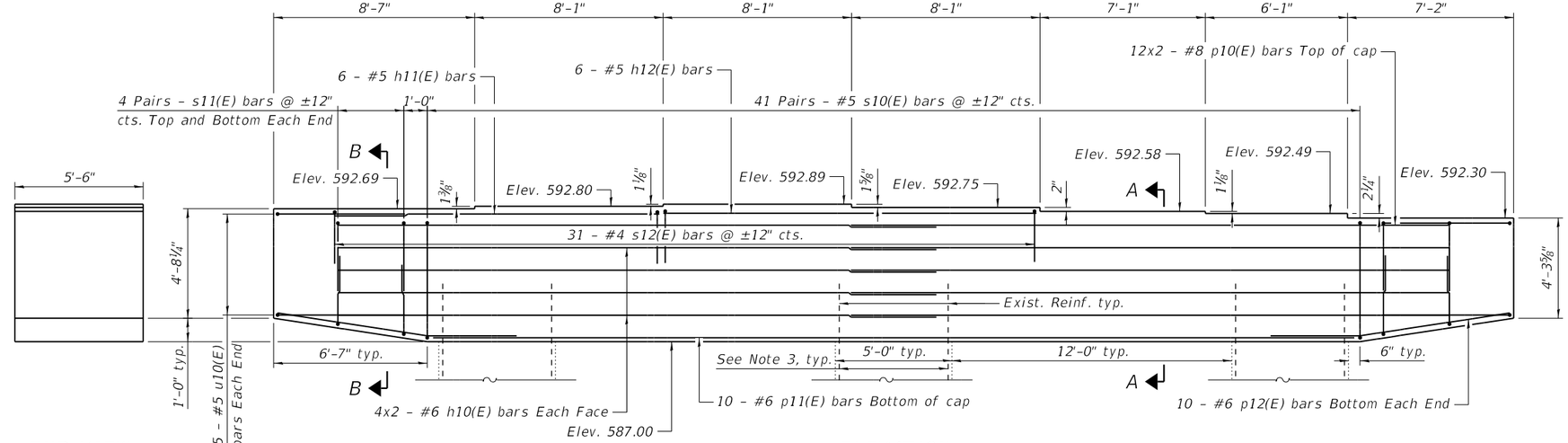

ELEVATION
(Looking East)

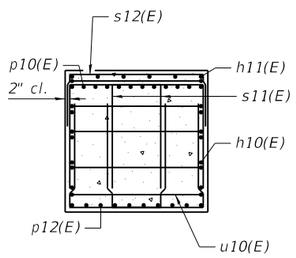

SECTION B-B

END VIEW

BAR LAP LENGTHS
#6 h10(E) bars 4'-4"
#8 p10(E) bars 8'-2"

BILL OF MATERIAL

Bar	No.	Size	Length	Shape
h10(E)	16	#6	26'-0"	
h11(E)	6	#5	13'-11"	
h12(E)	6	#5	16'-0"	
p10(E)	24	#8	27'-11"	
p11(E)	10	#6	40'-0"	
p12(E)	20	#6	10'-3"	
s10(E)	82	#5	17'-9"	
s11(E)	32	#5	11'-6"	
s12(E)	31	#4	9'-2"	
u10(E)	10	#5	14'-6"	

Item	Unit	Total
Concrete Structures	Cu. Yd.	58.8
Reinforcement Bars, Epoxy Coated	Pound	5760

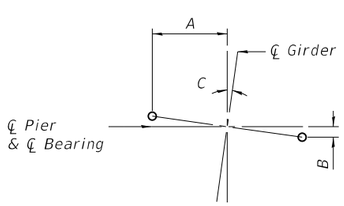

ANCHOR BOLT DETAIL

Beam	A	B	C
1B	1'-3¾"	2 3/16"	8.000°
2B	1'-3¾"	2 3/16"	8.000°
3B	1'-3¾"	2 3/16"	8.000°
4B	1'-3¾"	2 3/16"	8.000°
5B	1'-3¾"	2 3/16"	8.000°
6B	1'-3¾"	2 1/16"	7.429°
7B	1'-3¾"	1⅞"	6.854°

A, B, & C DIMENSIONS

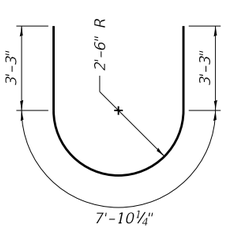

BAR u10(E)

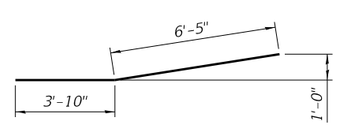

BAR p12(E)

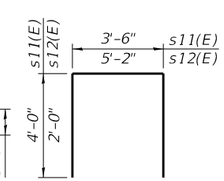

BAR s11(E) & s12(E)

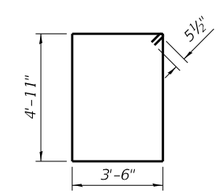

BAR s10(E)

QUIGG ENGINEERING INC	USER NAME =	DESIGNED - KWB	REVISED -
		CHECKED - KFO	REVISED -
	PLOT SCALE =	DRAWN - LMC	REVISED -
	PLOT DATE = 10/4/2019	CHECKED - MDC	REVISED -

STATE OF ILLINOIS
DEPARTMENT OF TRANSPORTATION

EASTBOUND PIER 1
SN 050-0220

SHEET S78 OF 80 SHEETS

F.A. RTE.	SECTION	COUNTY	TOTAL SHEETS	SHEET NO.
80	(50-2BR)ES	LASALLE	328	203

CONTRACT NO. 66H21
ILLINOIS | FED. AID PROJECT

MODEL: Default
FILE NAME: S:\2017\17IL021 Various Phase I-II IDOT D3-Graef PTB 184-017\Work Order 5 - I-80 Bridge PH-2\CADD\CADD Sheets\(21) 66H21 - EB Pier 1 - Details.dgn
10/15/2019 8:41:30 AM

NOTES:
1. Space reinforcement in cap to miss anchor bolts.
2. Pour steps monolithically with cap.
3. Existing column reinforcement shall be cleaned and incorporated into new construction. Cost included in Concrete Removal.
4. Bars noted thus, 12x2 - #8 indicates 12 lines of bars with 2 lengths of bars per line.

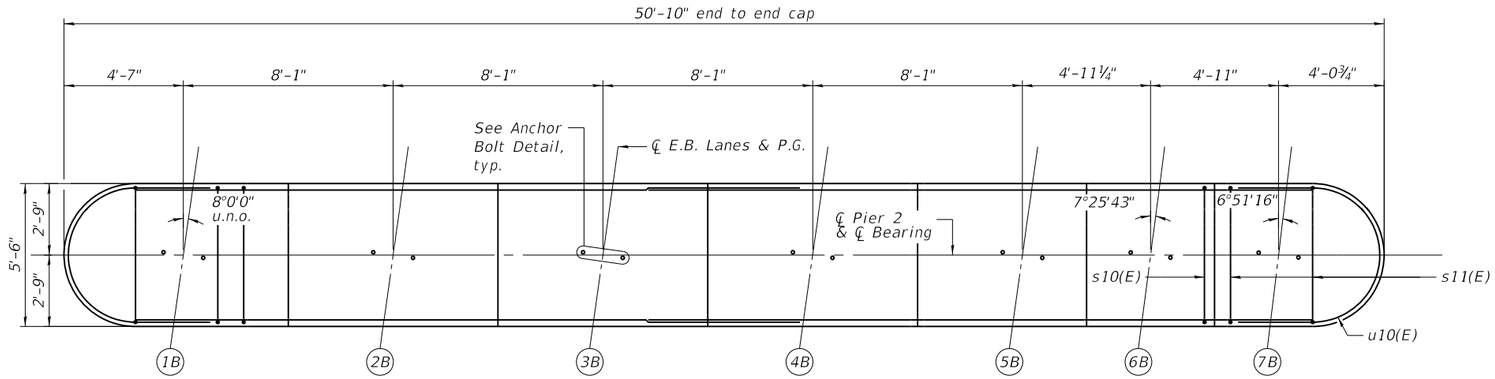

PLAN

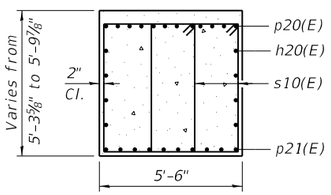

SECTION A-A

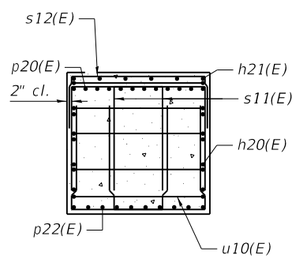

SECTION B-B

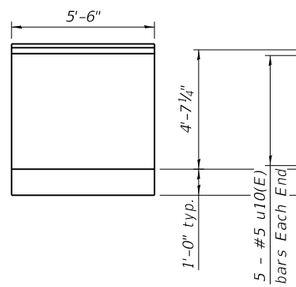

END VIEW

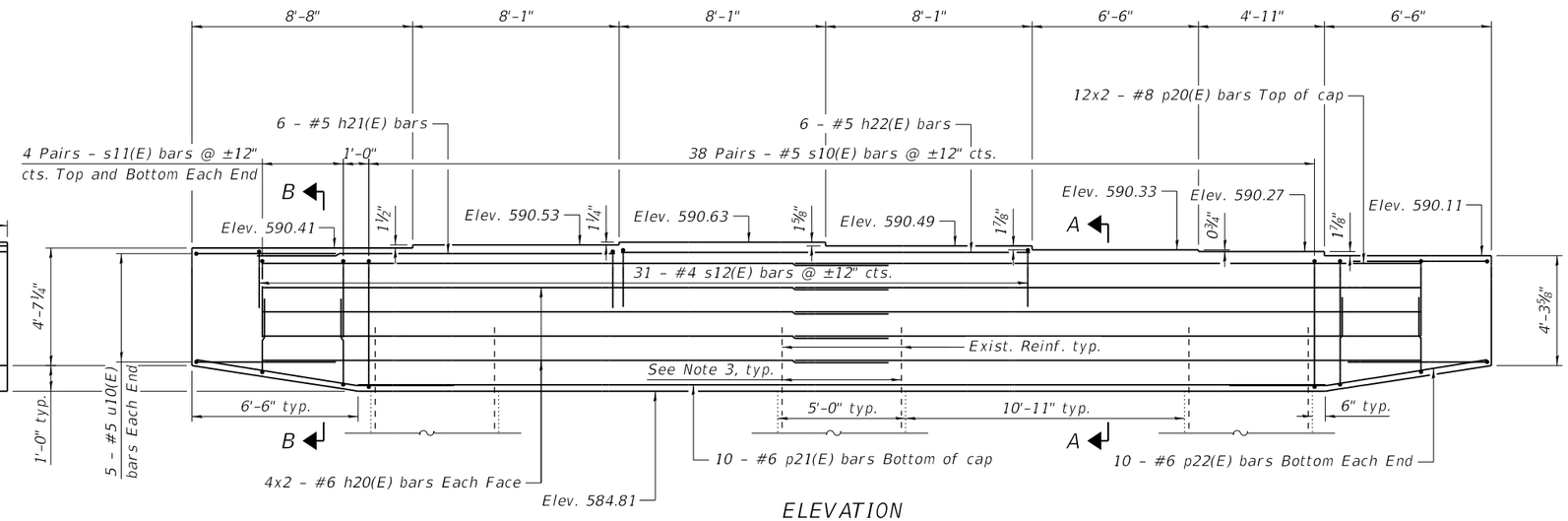

ELEVATION
(Looking East)

BAR LAP LENGTHS
#6 h20(E) bars 4'-4"
#8 p20(E) bars 8'-2"

BILL OF MATERIAL

Bar	No.	Size	Length	Shape
h20(E)	16	#6	24'-10"	
h21(E)	6	#5	14'-0"	
h22(E)	6	#5	16'-0"	
p20(E)	24	#8	26'-9"	
p21(E)	10	#6	37'-10"	
p22(E)	20	#6	10'-2"	
s10(E)	76	#5	17'-9"	
s11(E)	32	#5	11'-6"	
s12(E)	31	#4	9'-2"	
u10(E)	10	#5	14'-6"	

Item	Unit	Total
Concrete Structures	Cu. Yd.	55.6
Reinforcement Bars, Epoxy Coated	Pound	5510

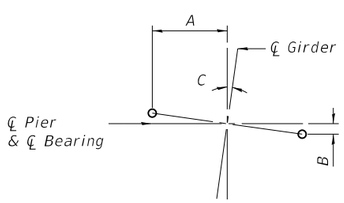

ANCHOR BOLT DETAIL

Beam	A	B	C
1B	9 3/16"	1 3/16"	8.000°
2B	9 3/16"	1 5/16"	8.000°
3B	9 3/16"	1 5/16"	8.000°
4B	9 3/16"	1 5/16"	8.000°
5B	9 3/16"	1 5/16"	8.000°
6B	9 3/16"	1 3/16"	7.429°
7B	9 3/16"	1⅛"	6.854°

A, B, & C DIMENSIONS

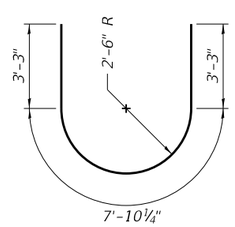

BAR u10(E)

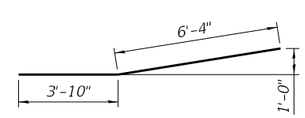

BAR p22(E)

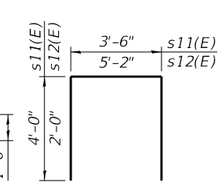

BAR s11(E) & s12(E)

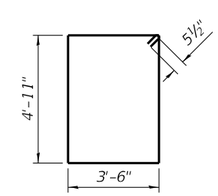

BAR s10(E)

QUIGG ENGINEERING INC

USER NAME =	DESIGNED - KWB	REVISED -	
	CHECKED - KFO	REVISED -	
PLOT SCALE =	DRAWN - LMC	REVISED -	
PLOT DATE = 10/4/2019	CHECKED - MDC	REVISED -	

STATE OF ILLINOIS
DEPARTMENT OF TRANSPORTATION

EASTBOUND PIER 2
SN 050-0220

SHEET S79 OF 80 SHEETS

F.A. RTE.	SECTION	COUNTY	TOTAL SHEETS	SHEET NO.
80	(50-2BR)ES	LASALLE	328	204

CONTRACT NO. 66H21

ILLINOIS | FED. AID PROJECT

MODEL: Default
FILE NAME: S:\2017\17L021 Various Phase I-II IDOT D3-Graef PTB 184-017\Work Order 5 - I-80 Bridge PH-2\CADD\CADD Sheets\(22) 66H21 - EB Pier 2 - Details.dgn
10/15/2019 8:41:32 AM

NOTES:
1. Space reinforcement in cap to miss anchor bolts.
2. Pour steps monolithically with cap.
3. Existing column reinforcement shall be cleaned and incorporated into new construction. Cost included in Concrete Removal.
4. Bars noted thus, 12x2 - #8 indicates 12 lines of bars with 2 lengths of bars per line.

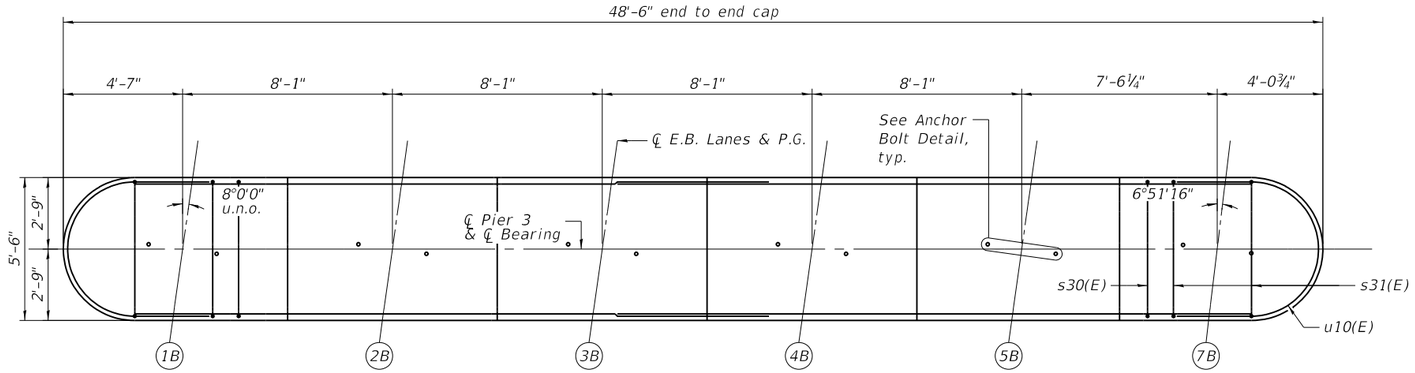

PLAN

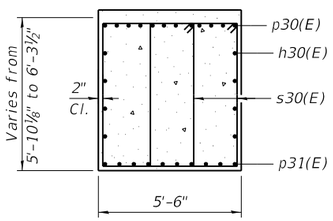

SECTION A-A

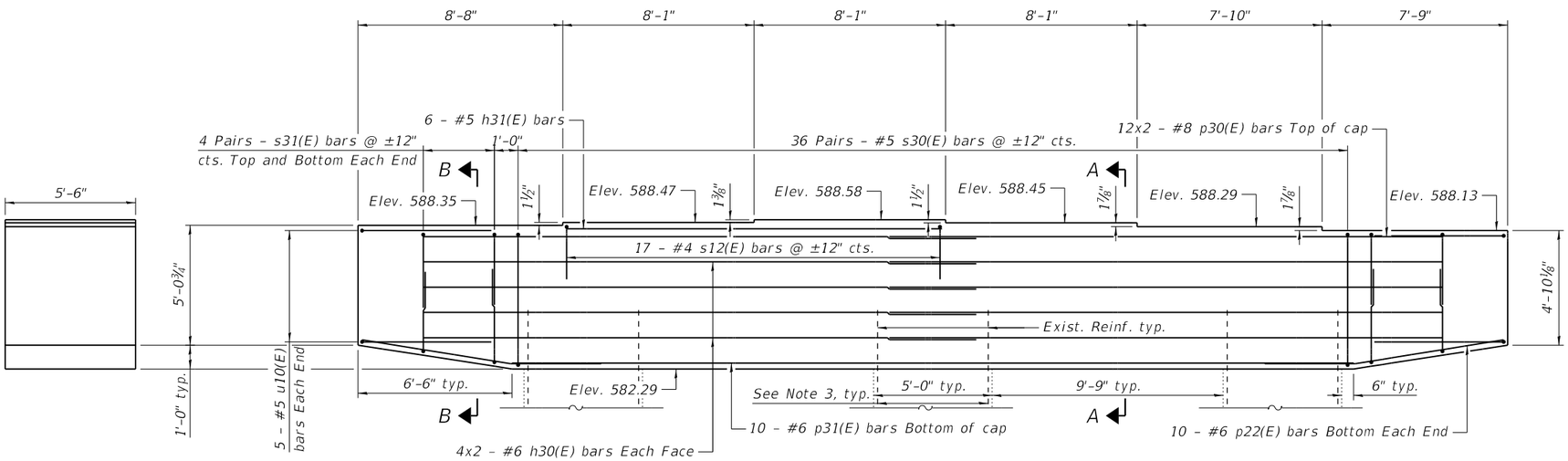

ELEVATION
(Looking East)

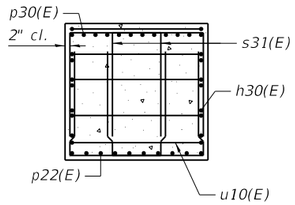

SECTION B-B

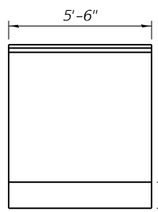

END VIEW

BAR LAP LENGTHS
#6 h30(E) bars 4'-4"
#8 p30(E) bars 8'-2"

BILL OF MATERIAL

Bar	No.	Size	Length	Shape
h30(E)	16	#6	23'-8"	
h31(E)	6	#5	15'-10"	
p22(E)	20	#6	10'-2"	
p30(E)	24	#8	25'-7"	
p31(E)	10	#6	35'-6"	
s12(E)	17	#5	9'-2"	
s30(E)	72	#5	18'-11"	
s31(E)	32	#4	12'-0"	
u10(E)	10	#5	14'-6"	

Item	Unit	Total
Concrete Structures	Cu. Yd.	57.6
Reinforcement Bars, Epoxy Coated	Pound	5230

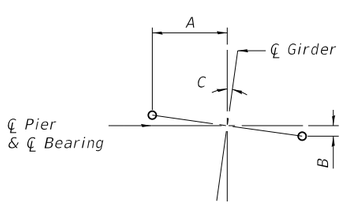

ANCHOR BOLT DETAIL

Beam	A	B	C
1B	1'-3¾"	2 3/16"	8.000°
2B	1'-3¾"	2 3/16"	8.000°
3B	1'-3¾"	2 3/16"	8.000°
4B	1'-3¾"	2 3/16"	8.000°
5B	1'-3¾"	2 3/16"	8.000°
7B	1'-3¾"	1⅞"	6.854°

A, B, & C DIMENSIONS

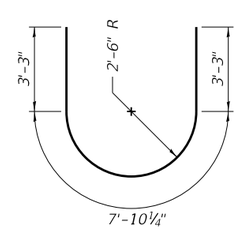

BAR u10(E)

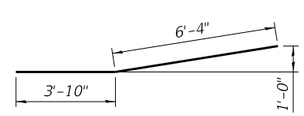

BAR p22(E)

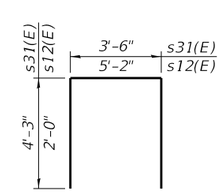

BAR s31(E) & s12(E)

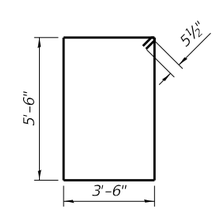

BAR s30(E)

QUIGG ENGINEERING INC	USER NAME =	DESIGNED - KWB	REVISED -
		CHECKED - KFO	REVISED -
	PLOT SCALE =	DRAWN - LMC	REVISED -
	PLOT DATE = 10/4/2019	CHECKED - MDC	REVISED -

STATE OF ILLINOIS
DEPARTMENT OF TRANSPORTATION

EASTBOUND PIER 3
SN 050-0220

SHEET S80 OF 80 SHEETS

F.A. RTE.	SECTION	COUNTY	TOTAL SHEETS	SHEET NO.
80	(50-2BR)ES	LASALLE	328	205

CONTRACT NO. 66H21
ILLINOIS | FED. AID PROJECT

MODEL: Default
FILE NAME: S:\2017\17IL021 Various Phase I-II IDOT D3-Graef PTB 184-017\Work Order 5 - I-80 Bridge PH-2\CADD\CADD Sheets\(23) 66H21 - EB Pier 3 - Details.dgn
10/15/2019 8:41:33 AM

ROUTE NO	SECTION	COUNTY	TOTAL SHEETS	SHEET NO
F.A.I. 80	*	LASALLE	196	39
FED ROAD DIST NO 7		ILLINOIS PROJECT		

Sheet 1 of 31 *(50-2)HBR-1, HB-2, BR

BENCH MARK : U.S.G.S. brass tablet set in North end of Pier #1 crash wall, Structure No. 050-0001 - Elev. 640.92

EXISTING STRUCTURE : Structures no. 050-0001 and 050-0002 built in 1962 @ Sta. 614+15.00, F.A.I.-80, Sec 50-2VB. Six spans and seven spans respectively, consisting of P.P.C. I-Beams on R.C. Piers and Abutments. Existing structure to be removed.

STAGING : Remove and reconstruct one bridge at a time while maintaining traffic on adjacent structure via a crossover.

SALVAGE : Recycle bituminous surfacing.

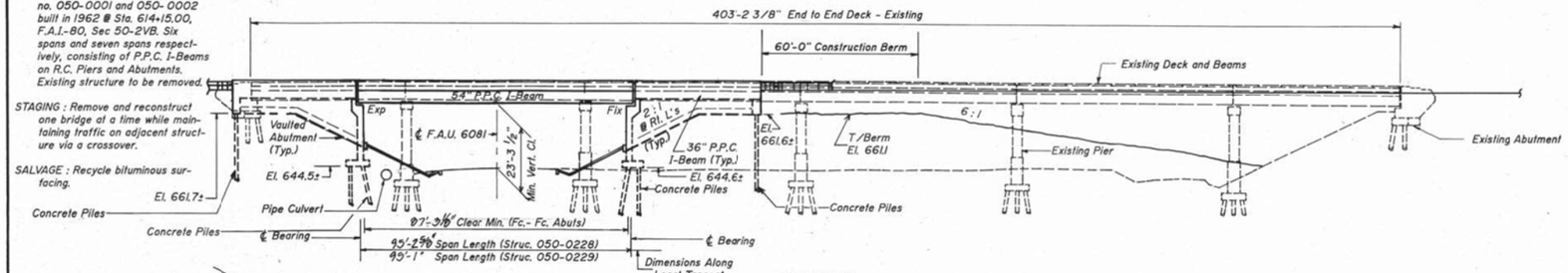

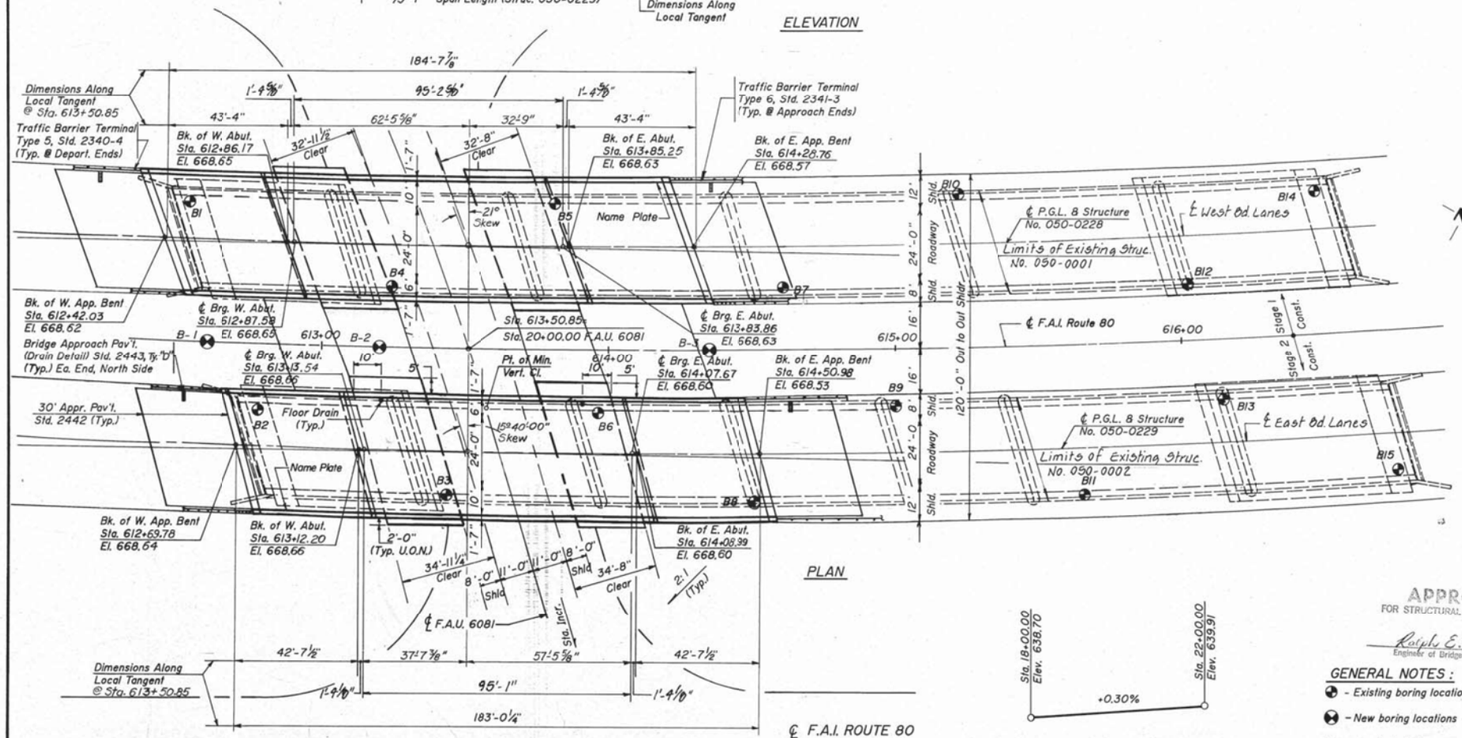

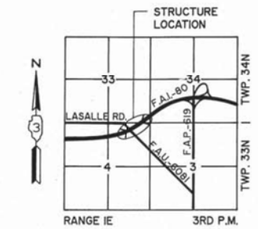

LOCATION SKETCH

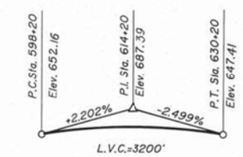

PROFILE GRADE
F.A.I. - 80
(Along ℄ of Roadways)

DESIGN SPECIFICATIONS

1992 AASHTO

LOADING HS 20-44 & ALT. LOADING

Allow 25#/sq. ft. for Future Wearing Surface.
AASHTO Seismic Acceleration Coefficient = .04

DESIGN STRESSES FIELD UNITS

f'c = 3,500 psi
fy = 60,000 psi (Reinf.)
fy = 36,000 psi (Structural Steel)
(M 270 Grade 36)

PRECAST PRESTRESSED UNITS

f'c = 6,000 psi
f'ci = 5,000 psi
f's = 270,000 psi (1/2" dia. Low Relaxation Strands)
f'si = 201,960 psi (1/2" dia. Low Relaxation Strands)

℄ F.A.I. ROUTE 80
CURVE DATA

P.I. Sta. 608+00.00
Δ = 42°27'40"
D = 1°30'00"
R = 3,819.72'
T = 1483.93'
L = 2830.74'
E = 278.12'
S.E. = 0.03 ft/ft

PROFILE GRADE
LASALLE ROAD (F.A.U. 6081)
(Along ℄ of Roadway)

APPROVED
FOR STRUCTURAL ADEQUACY ONLY.
Ralph E. Anderson
Engineer of Bridges and Structures

GENERAL NOTES :

- Existing boring locations.
- New boring locations

Epoxy coated reinforcement shall be used in all substructure caps.

STEVEN B. UZMAN
001-004746
LICENSED STRUCTURAL ENGINEER OF SPRINGFIELD
ILLINOIS

ILLINOIS STRUCTURAL NO. 4745 Expires 11-30-94

GENERAL PLAN
F.A.I. ROUTE 80 OVER F.A.U. 6081 (LASALLE RD.)
SECTION (50-2) HB-2
STRUCTURE NOS. 050-0228 & 050-0229
LASALLE COUNTY
STATION 613+50.85

TENNEY PAVONI ASSOCIATES, INC.
FORMERLY
TEN ECH ENGINEERING, INC.

DESIGNED : D.A.B. CHECKED : M.C.B.
DRAWN : M.H. DATE : 7/09/93 NO. 310

FOR INFORMATION ONLY

MODEL: Default
FILE NAME: \\QuiggProjects\2018\18L018 Various Structure IDOT D3 Farnsworth PTB 161-2\Work Order 14 - I-80 Roadway and other\CADD\CADD Sheets\Existing Bridge Plans 0228-0229 001.dgn

QUIGG ENGINEERING INC

USER NAME = mwilson	DESIGNED -	REVISED -	
	DRAWN -	REVISED -	
PLOT SCALE = 2.0000 ' / in.	CHECKED -	REVISED -	
PLOT DATE = 10/2/2019	DATE - 10/4/2019	REVISED -	

STATE OF ILLINOIS
DEPARTMENT OF TRANSPORTATION

EXISTING STRUCTURAL PLANS
STRUCTURE NO. 050-0228/0229

SCALE: SHEET 1 OF 30 SHEETS STA. TO STA.

F.A.I RTE.	SECTION	COUNTY	TOTAL SHEETS	SHEET NO.
80	50-2(HB-2)BDR(HB-1)BR(BR)BR-1	LASALLE	328	206
		CONTRACT NO. 66H21		
		ILLINOIS FED. AID PROJECT		

ROUTE NO.	SECTION	COUNTY	TOTAL SHEETS	SHEET NO.
F.A.I. 80	*	LaSALLE	196	40
FED. ROAD DIST. NO. 7	ILLINOIS	PROJECT-		

SHEET 2 OF 31
*(50-2)HBR-1, HB-2, BR

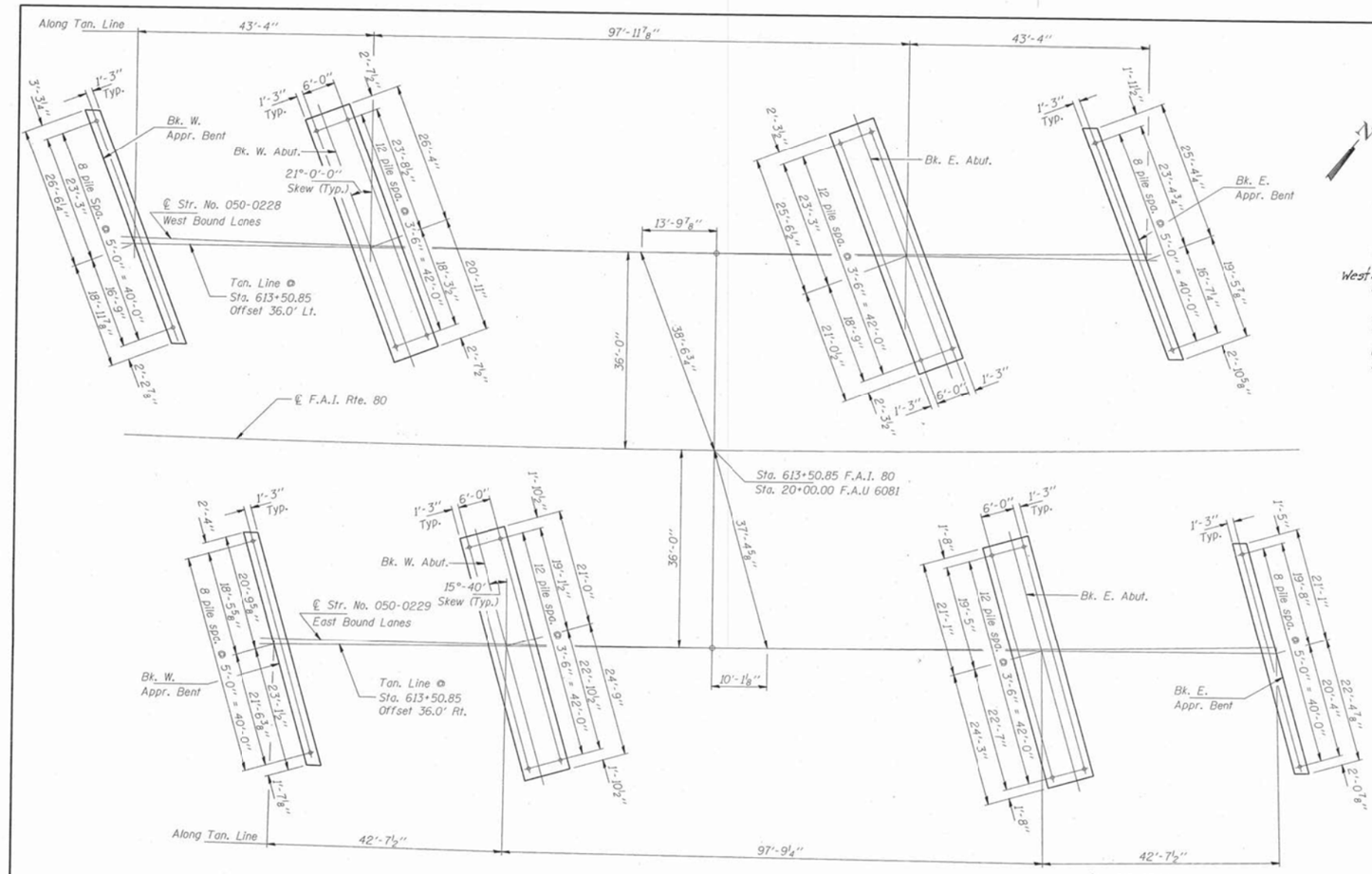

FOOTING LAYOUT

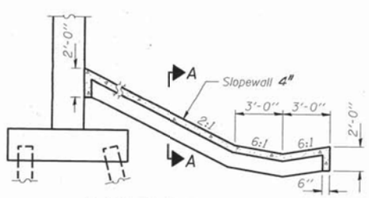

SECTION THRU SLOPEWALL

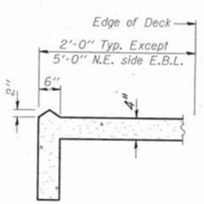

SECTION A-A

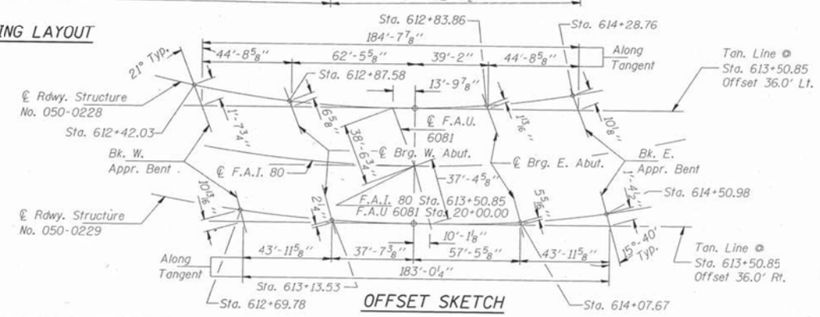

OFFSET SKETCH

GENERAL NOTES

All top surfaces of the abutment seats shall receive "Bridge Seat Sealer".
Reinforcement bars shall conform to the requirements of AASHTO M-31, M-42 or M-53 Grade 60.
Slope wall shall be reinforced with welded wire fabric, 6" x 6" - W4.0 x W4.0, weighing 58 lbs. per 100 sq. ft.
The embankment configuration shown shall be the minimum embankment that must be constructed prior to construction of the abutments.
The contractor shall drive 1 concrete test pile in a permanent location at each West Abutment & 1 concrete test pile near each East Abutment as directed by the Engineer before ordering the remainder of piles.
All structural steel shall be shop painted with the Inorganic Zinc-Silicate / Acrylic / Acrylic Paint System. The color of the acrylic finish coats shall be Munsell No. 10Y 7/1 light grey.
Concrete piles at abutments shall be driven in holes precored through the embankment in accordance with Article 512.10(c) of the Standard Specifications.

TOTAL BILL OF MATERIAL

ITEM	UNIT	SUPER	SUB	TOTAL
Removal of Existing Structures	Each			2
Structure Excavation	Cu. Yd.		957.6	957.6
Floor Drains	Each	2		2
Preformed Joint Seal 1¾"	Foot	91		91
Preformed Joint Seal 4"	Foot	91		91
Concrete Superstructure	Cu. Yd.	537.4		537.4
* Protective Coat	Sq. Yd.	298		298
Elastomeric Bearing Assembly Type I	Each	14		14
Concrete Structures	Cu. Yd.		579.4	579.4
Furnishing & Erecting Precast Prestressed Concrete I Beams, 36"	Foot	997		997
Furnishing & Erecting Precast Prestressed Concrete I Beams, 54"	Foot	1351		1351
Structural Steel	Pound	11580		11580
Reinforcement Bars, Epoxy Coated	Pound	111130	68190	179320
Concrete Piles	Foot		5786	5786
Test Pile Concrete	Each		4	4
Name Plates	Each	2		2
Slopewall 4"	Sq. Yd.		5120	5120
Bridge Seat Sealer	Sq. Ft.		389	389
Bridge Deck Grooving	Sq. Yd.	1620		1620

* Quantity is for top & inside face of parapet only

STATION 613+50.85
BUILT 199 BY
STATE OF ILLINOIS
F.A.I. 80 SEC. 50-2VBR
LOADING HS20 & Alt.
STR. NOS. 050-0228

NAME PLATE - W.B.L.
See Std. 2113

STATION 613+50.85
BUILT 199 BY
STATE OF ILLINOIS
F.A.I. 80 SEC. 50-2VBR
LOADING HS20 & Alt.
STR. NOS. 050-0229

NAME PLATE - E.B.L.
See Std. 2113

GENERAL PLAN DETAILS
F.A.I. 80 OVER F.A.U. 6081 (LaSalle RD.)
SECTION (50-2)HB-2
STATION 613+50.85
LaSALLE COUNTY
STRUCTURE NUMBERS 050-0228 & 0229

FOR INFORMATION ONLY

MODEL: Default
FILE NAME: \\Quigg\Projects\2018\18L018 Various Structure IDOT D3 Farnsworth PTB 161-21\Work Order 14 - I-80 Roadway and other\CADD\CADD Sheets\Existing Bridge Plans\0366121-Int-Existing Bridge Plans 0228-0229-002.dgn

QUIGG ENGINEERING INC

USER NAME = mwilson	DESIGNED -	REVISED -	
	DRAWN -	REVISED -	
PLOT SCALE = 2.0000 ' / in.	CHECKED -	REVISED -	
PLOT DATE = 10/2/2019	DATE - 10/4/2019	REVISED -	

STATE OF ILLINOIS
DEPARTMENT OF TRANSPORTATION

EXISTING STRUCTURAL PLANS
STRUCTURE NO. 050-0228/0229

SCALE: | SHEET 2 OF 30 SHEETS | STA. | TO STA.

F.A.I RTE.	SECTION	COUNTY	TOTAL SHEETS	SHEET NO.
80	50-2(HB-2)BDR(HB-1)BR(BR)BR-1	LASALLE	328	207

CONTRACT NO. 66H21
ILLINOIS | FED. AID PROJECT

ROUTE NO.	SECTION	COUNTY	TOTAL SHEETS	SHEET NO.
F.A.I. 80	*	LaSALLE	196	41
FED. ROAD DIST. NO. 7	ILLINOIS	PROJECT-		

SHEET 3 OF 31

*(50-2)HBR-1, HB-2, BR

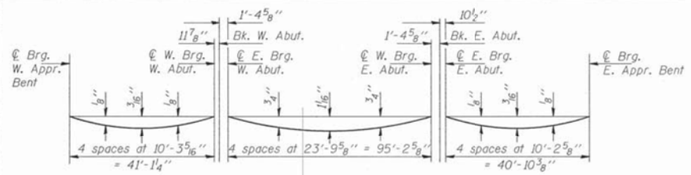

DEAD LOAD DEFLECTION DIAGRAM

(Includes weight of concrete, excluding beams)

Note: The above deflections are not to be used in the field if the engineer is working from the grade elevations adjusted for dead load deflections as shown below.

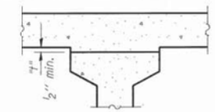

To determine "1": After all precast prestressed beams have been erected, elevations of the top flanges of the beams shall be taken at intervals shown below. These elevations subtracted from the "Theoretical Grade Elevations Adjusted for Dead Load Deflections" minus slab thickness, equals the fillet heights "1" above top flanges of beams.

FILLET HEIGHTS

BEAM 1

Location	Station	Offset	Theoretical Grade Elevations	Theoretical Grade Elevations Adjusted For Dead Load Deflection
BK. E. ABUT.	61377.568	-20.247	668.028	668.028
℄ E. BRG. E. ABUT	61378.459	-20.254	668.027	668.027
M	61388.608	-20.315	668.016	668.026
N	61398.758	-20.349	668.004	668.019
O	61408.907	-20.357	667.991	668.002
℄ BRG. E. APPR. BENT	61419.932	-20.335	667.976	667.976
END E. APPR. SLAB	61420.765	-20.332	667.975	667.975
BK. E. APPR. BENT	61421.306	-20.330	667.974	667.974

BEAM 2

Location	Station	Offset	Theoretical Grade Elevations	Theoretical Grade Elevations Adjusted For Dead Load Deflection
BK. E. ABUT.	61380.352	-12.934	668.245	668.245
℄ E. BRG. E. ABUT	61381.241	-12.940	668.244	668.244
M	61391.371	-12.994	668.233	668.243
N	61401.500	-13.021	668.220	668.236
O	61411.630	-13.021	668.207	668.218
℄ BRG. E. APPR. BENT	61422.634	-12.992	668.192	668.192
END E. APPR. SLAB	61423.465	-12.988	668.191	668.191
BK. E. APPR. BENT	61424.005	-12.986	668.190	668.190

BEAM 3

Location	Station	Offset	Theoretical Grade Elevations	Theoretical Grade Elevations Adjusted For Dead Load Deflection
BK. E. ABUT.	61383.126	-5.619	668.462	668.462
℄ E. BRG. E. ABUT	61384.012	-5.624	668.461	668.461
M	61394.123	-5.671	668.449	668.460
N	61404.233	-5.690	668.437	668.452
O	61414.343	-5.684	668.424	668.434
℄ BRG. E. APPR. BENT	61425.325	-5.647	668.408	668.408
END E. APPR. SLAB	61426.155	-5.642	668.407	668.407
BK. E. APPR. BENT	61426.694	-5.640	668.407	668.407

P.G. AND ℄ ROADWAY

Location	Station	Offset	Theoretical Grade Elevations	Theoretical Grade Elevations Adjusted For Dead Load Deflection
BK. E. ABUT.	61385.251	.000	668.629	668.629
℄ E. BRG. E. ABUT.	61386.142	.000	668.628	668.628
M	61396.237	.000	668.617	668.627
N	61406.332	.000	668.605	668.620
O	61416.427	.000	668.591	668.602
℄ BRG. E. APPR. BENT	61427.392	.000	668.575	668.575
END E. APPR. SLAB	61428.219	.000	668.573	668.573
BK. E. APPR. BENT	61428.756	.000	668.572	668.572

BEAM 4

Location	Station	Offset	Theoretical Grade Elevations	Theoretical Grade Elevations Adjusted For Dead Load Deflection
BK. E. ABUT.	61385.888	1.698	668.679	668.679
℄ E. BRG. E. ABUT	61386.773	1.694	668.678	668.678
M	61396.864	1.655	668.666	668.676
N	61406.955	1.642	668.653	668.669
O	61417.045	1.656	668.640	668.651
℄ BRG. E. APPR. BENT	61428.006	1.700	668.625	668.625
END E. APPR. SLAB	61428.834	1.705	668.623	668.623
BK. E. APPR. BENT	61429.372	1.708	668.623	668.623

BEAM 5

Location	Station	Offset	Theoretical Grade Elevations	Theoretical Grade Elevations Adjusted For Dead Load Deflection
BK. E. ABUT.	61388.640	9.017	668.896	668.896
℄ E. BRG. E. ABUT	61389.523	9.013	668.895	668.895
M	61399.595	8.981	668.883	668.893
N	61409.666	8.976	668.870	668.885
O	61419.737	8.997	668.856	668.867
℄ BRG. E. APPR. BENT	61430.676	9.049	668.841	668.841
END E. APPR. SLAB	61431.503	9.054	668.840	668.840
BK. E. APPR. BENT	61432.040	9.058	668.839	668.839

BEAM 6

Location	Station	Offset	Theoretical Grade Elevations	Theoretical Grade Elevations Adjusted For Dead Load Deflection
BK. E. ABUT.	61391.381	16.339	669.113	669.113
℄ E. BRG. E. ABUT	61392.263	16.335	669.112	669.112
M	61402.315	16.310	669.099	669.109
N	61412.367	16.312	669.086	669.102
O	61422.418	16.340	669.073	669.083
℄ BRG. E. APPR. BENT	61433.336	16.400	669.057	669.057
END E. APPR. SLAB	61434.161	16.406	669.056	669.056
BK. E. APPR. BENT	61434.697	16.409	669.055	669.055

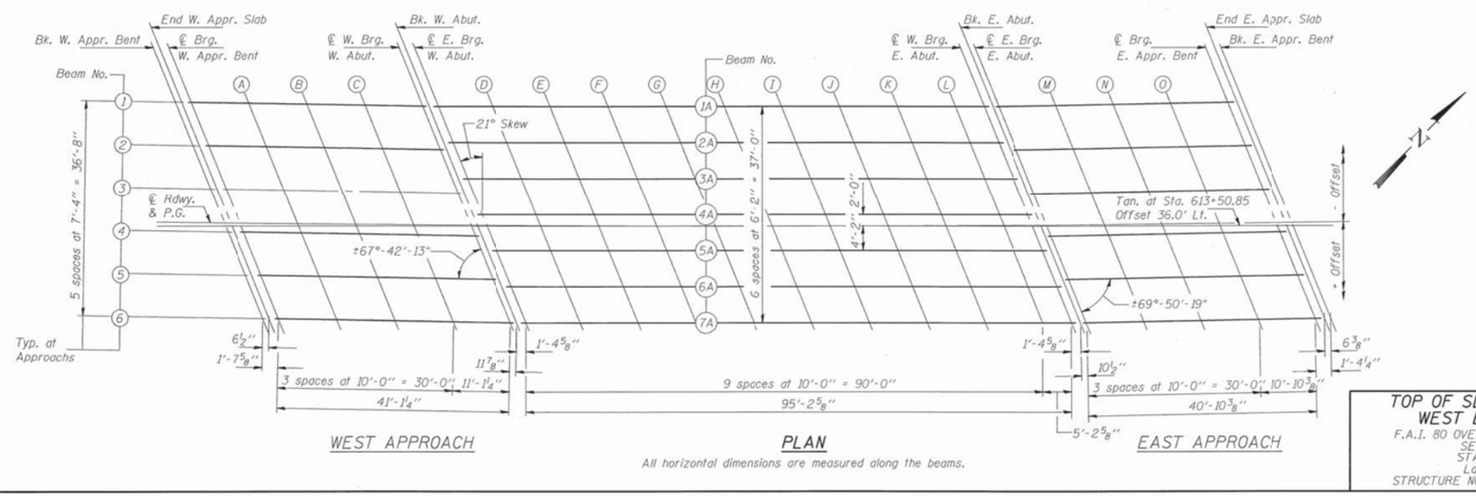

WEST APPROACH

PLAN

All horizontal dimensions are measured along the beams.

EAST APPROACH

PI-E

TOP OF SLAB ELEVATIONS
WEST BOUND LANES
F.A.I. 80 OVER F.A.U. 6081 (LaSalle RD.)
SECTION (50-2) HB-2
STATION 613+50.85
LaSALLE COUNTY
STRUCTURE NUMBERS 050-0228 & 0229

FOR INFORMATION ONLY

MODEL: Default
FILE NAME: \\Quigg\Projects\2018\18L018 Various Structure IDOT D3 Farnsworth PTB 161-21\Work Order 14 - I-80 Roadway and other\CADD\CADD Sheets\Existing Bridge Plans\0366H21-int-Existing Bridge Plans 0228-0229-003.dgn

QUIGG ENGINEERING INC

USER NAME = mwilson	DESIGNED -	REVISED -	
	DRAWN -	REVISED -	
PLOT SCALE = 2.0000 ' / in.	CHECKED -	REVISED -	
PLOT DATE = 10/2/2019	DATE - 10/4/2019	REVISED -	

STATE OF ILLINOIS
DEPARTMENT OF TRANSPORTATION

EXISTING STRUCTURAL PLANS
STRUCTURE NO. 050-0228/0229

SCALE: | SHEET 3 OF 30 SHEETS | STA. | TO STA.

F.A.I RTE.	SECTION	COUNTY	TOTAL SHEETS	SHEET NO.
80	50-2(HB-2)BDR(HB-1)BR(BR)BR-1	LASALLE	328	208
		CONTRACT NO. 66H21		
		ILLINOIS	FED. AID PROJECT	

ROUTE NO.	SECTION	COUNTY	TOTAL SHEETS	SHEET NO.
F.A.I. 80	*	LaSALLE	196	42
FED. ROAD DIST. NO. 7	ILLINOIS	PROJECT-		

SHEET 4 OF 31

P.G. AND ℄ ROADWAY *150-2)HBR-1, HB-2, BR

Location	Station	Offset	Theoretical Grade Elevations	Theoretical Grade Elevations Adjusted For Dead Load Deflection
BK. W. APPR. BENT	61242.033	.000	668.618	668.618
END W. APPR. SLAB	61242.580	.000	668.618	668.618
℄ BRG. W. APPR. BENT	61243.685	.000	668.619	668.619
A	61253.780	.000	668.630	668.640
B	61263.875	.000	668.639	668.654
C	61273.970	.000	668.646	668.657
℄ W. BRG. W. ABUT.	61285.180	.000	668.653	668.653
BK. W. ABUT.	61286.175	.000	668.653	668.653

BEAM 1

Location	Station	Offset	Theoretical Grade Elevations	Theoretical Grade Elevations Adjusted For Dead Load Deflection
BK. W. APPR. BENT	61233.464	-20.234	668.000	668.000
END W. APPR. SLAB	61234.014	-20.238	668.001	668.001
℄ BRG. W. APPR. BENT	61235.121	-20.247	668.002	668.002
A	61245.271	-20.310	668.012	668.022
B	61255.420	-20.347	668.021	668.036
C	61265.570	-20.358	668.029	668.040
℄ W. BRG. W. ABUT	61276.840	-20.338	668.038	668.038
BK. W. ABUT.	61277.846	-20.335	668.039	668.039

BEAM 2

Location	Station	Offset	Theoretical Grade Elevations	Theoretical Grade Elevations Adjusted For Dead Load Deflection
BK. W. APPR. BENT	61236.570	-12.925	668.224	668.224
END W. APPR. SLAB	61237.119	-12.928	668.224	668.224
℄ BRG. W. APPR. BENT	61238.224	-12.936	668.225	668.225
A	61248.354	-12.991	668.235	668.245
B	61258.484	-13.020	668.244	668.259
C	61268.614	-13.023	668.252	668.263
℄ W. BRG. W. ABUT	61279.862	-12.994	668.260	668.260
BK. W. ABUT.	61280.866	-12.990	668.261	668.261

BEAM 3

Location	Station	Offset	Theoretical Grade Elevations	Theoretical Grade Elevations Adjusted For Dead Load Deflection
BK. W. APPR. BENT	61239.664	-5.612	668.447	668.447
END W. APPR. SLAB	61240.212	-5.616	668.447	668.447
℄ BRG. W. APPR. BENT	61241.315	-5.623	668.448	668.448
A	61251.425	-5.670	668.458	668.468
B	61261.535	-5.691	668.466	668.482
C	61271.646	-5.685	668.474	668.485
℄ W. BRG. W. ABUT	61282.872	-5.648	668.482	668.482
BK. W. ABUT.	61283.874	-5.643	668.483	668.483

BEAM 1A

Location	Station	Offset	Theoretical Grade Elevations	Theoretical Grade Elevations Adjusted For Dead Load Deflection
BK. W. ABUT.	61278.059	-19.817	668.054	668.054
℄ E. BRG. W. ABUT.	61279.464	-19.843	668.054	668.054
D	61289.611	-20.016	668.054	668.081
E	61299.759	-20.163	668.053	668.106
F	61309.908	-20.284	668.052	668.121
G	61320.057	-20.378	668.050	668.130
H	61330.207	-20.445	668.047	668.133
I	61340.357	-20.486	668.043	668.118
J	61350.507	-20.500	668.039	668.103
K	61360.657	-20.488	668.034	668.074
L	61370.807	-20.449	668.028	668.042
℄ W. BRG. E. ABUT.	61376.104	-20.418	668.024	668.024
BK. E. ABUT.	61377.510	-20.408	668.024	668.024

BEAM 4

Location	Station	Offset	Theoretical Grade Elevations	Theoretical Grade Elevations Adjusted For Dead Load Deflection
BK. W. APPR. BENT	61242.746	1.702	668.670	668.670
END W. APPR. SLAB	61243.293	1.699	668.670	668.670
℄ BRG. W. APPR. BENT	61244.394	1.693	668.671	668.671
A	61254.485	1.654	668.680	668.690
B	61264.575	1.641	668.689	668.704
C	61274.666	1.655	668.696	668.707
℄ W. BRG. W. ABUT	61285.871	1.701	668.704	668.704
BK. W. ABUT.	61286.871	1.707	668.705	668.705

BEAM 5

Location	Station	Offset	Theoretical Grade Elevations	Theoretical Grade Elevations Adjusted For Dead Load Deflection
BK. W. APPR. BENT	61245.816	9.019	668.892	668.892
END W. APPR. SLAB	61246.362	9.017	668.893	668.893
℄ BRG. W. APPR. BENT	61247.461	9.012	668.894	668.894
A	61257.532	8.980	668.903	668.913
B	61267.603	8.976	668.911	668.926
C	61277.675	8.997	668.918	668.929
℄ W. BRG. W. ABUT	61288.857	9.052	668.926	668.926
BK. W. ABUT.	61289.855	9.058	668.927	668.927

BEAM 6

Location	Station	Offset	Theoretical Grade Elevations	Theoretical Grade Elevations Adjusted For Dead Load Deflection
BK. W. APPR. BENT	61248.875	16.339	669.115	669.115
END W. APPR. SLAB	61249.420	16.337	669.116	669.116
CL BRG. W. APPR. B	61250.516	16.332	669.117	669.117
A	61260.568	16.309	669.125	669.135
B	61270.620	16.312	669.133	669.149
C	61280.672	16.342	669.141	669.151
CL W. BRG. W. ABUT	61291.833	16.405	669.148	669.148
BK. W. ABUT.	61292.829	16.412	669.148	669.148

P.G. AND ℄ ROADWAY

Location	Station	Offset	Theoretical Grade Elevations	Theoretical Grade Elevations Adjusted For Dead Load Deflection
BK. W. ABUT.	61286.175	.000	668.653	668.653
℄ E. BRG. W. ABUT.	61287.583	.000	668.654	668.654
D	61297.678	.000	668.658	668.684
E	61307.773	.000	668.660	668.713
F	61317.868	.000	668.661	668.730
G	61327.963	.000	668.660	668.740
H	61338.059	.000	668.658	668.744
I	61348.154	.000	668.655	668.730
J	61358.249	.000	668.650	668.714
K	61368.344	.000	668.643	668.683
L	61378.439	.000	668.635	668.649
℄ W. BRG. E. ABUT.	61383.857	.000	668.630	668.630
BK. E. ABUT.	61385.251	.000	668.629	668.629

BEAM 2A

Location	Station	Offset	Theoretical Grade Elevations	Theoretical Grade Elevations Adjusted For Dead Load Deflection
BK. W. ABUT.	61280.576	-13.695	668.239	668.239
℄ E. BRG. W. ABUT.	61281.979	-13.721	668.239	668.239
D	61292.113	-13.888	668.239	668.265
E	61302.241	-14.028	668.238	668.291
F	61312.373	-14.142	668.236	668.306
G	61322.506	-14.230	668.234	668.314
H	61332.639	-14.290	668.231	668.317
I	61342.771	-14.325	668.227	668.302
J	61352.906	-14.333	668.223	668.287
K	61363.040	-14.314	668.217	668.257
L	61373.173	-14.269	668.211	668.225
℄ W. BRG. E. ABUT.	61378.461	-14.235	668.208	668.208
BK. E. ABUT.	61379.865	-14.225	668.207	668.207

BEAM 3A

Location	Station	Offset	Theoretical Grade Elevations	Theoretical Grade Elevations Adjusted For Dead Load Deflection
BK. W. ABUT.	61283.084	-7.572	668.424	668.424
℄ E. BRG. W. ABUT.	61284.486	-7.597	668.424	668.424
D	61294.600	-7.757	668.424	668.450
E	61304.715	-7.891	668.423	668.475
F	61314.831	-7.999	668.421	668.490
G	61324.947	-8.080	668.418	668.499
H	61335.064	-8.134	668.415	668.501
I	61345.181	-8.162	668.411	668.486
J	61355.298	-8.164	668.406	668.470
K	61365.415	-8.139	668.401	668.441
L	61375.531	-8.088	668.395	668.409
℄ W. BRG. E. ABUT.	61380.811	-8.050	668.391	668.391
BK. E. ABUT.	61382.212	-8.039	668.390	668.390

BEAM 4A

Location	Station	Offset	Theoretical Grade Elevations	Theoretical Grade Elevations Adjusted For Dead Load Deflection
BK. W. ABUT.	61285.585	-1.448	668.609	668.609
℄ E. BRG. W. ABUT.	61286.984	-1.471	668.609	668.609
D	61297.082	-1.625	668.609	668.635
E	61307.181	-1.753	668.607	668.660
F	61317.280	-1.854	668.605	668.675
G	61327.380	-1.929	668.603	668.683
H	61337.481	-1.977	668.599	668.685
I	61347.581	-1.999	668.595	668.670
J	61357.681	-1.994	668.590	668.654
K	61367.782	-1.963	668.585	668.625
L	61377.882	-1.905	658.578	668.592
℄ W. BRG. E. ABUT.	61383.153	-1.865	658.575	668.575
BK. E. ABUT.	61384.552	-1.853	658.574	668.574

BEAM 5A

Location	Station	Offset	Theoretical Grade Elevations	Theoretical Grade Elevations Adjusted For Dead Load Deflection
BK. W. ABUT.	61288.078	4.678	668.794	668.794
℄ E. BRG. W. ABUT.	61289.474	4.656	668.794	668.794
D	61299.556	4.508	668.794	668.820
E	61309.639	4.387	668.792	668.845
F	61319.722	4.292	668.790	668.859
G	61329.805	4.224	668.787	668.867
H	61339.889	4.182	668.783	668.869
I	61349.973	4.167	668.779	668.854
J	61360.057	4.178	668.774	668.838
K	61370.141	4.215	668.768	668.808
L	61380.225	4.279	668.762	668.776
℄ W. BRG. E. ABUT.	61385.487	4.322	668.758	668.758
BK. E. ABUT.	61386.884	4.335	668.757	668.757

BEAM 6A

Location	Station	Offset	Theoretical Grade Elevations	Theoretical Grade Elevations Adjusted For Dead Load Deflection
BK. W. ABUT.	61290.562	10.806	668.979	668.979
℄ E. BRG. W. ABUT.	61291.957	10.784	668.979	668.979
D	61302.022	10.643	668.978	669.005
E	61312.089	10.529	668.977	669.029
F	61322.156	10.440	668.974	669.043
G	61332.223	10.379	668.971	669.051
H	61342.290	10.343	668.967	669.053
I	61352.358	10.334	668.963	669.038
J	61362.426	10.351	668.958	669.022
K	61372.493	10.394	668.952	668.992
L	61382.560	10.464	668.945	668.959
℄ W. BRG. E. ABUT.	61387.814	10.511	668.942	668.942
BK. E. ABUT.	61389.208	10.525	668.941	668.941

BEAM 7A

Location	Station	Offset	Theoretical Grade Elevations	Theoretical Grade Elevations Adjusted For Dead Load Deflection
BK. W. ABUT.	61293.039	16.935	669.164	669.164
℄ E. BRG. W. ABUT.	61294.431	16.915	669.164	669.164
D	61304.481	16.780	659.163	669.189
E	61314.531	16.672	659.161	669.214
F	61324.581	16.590	659.159	669.228
G	61334.632	16.534	659.155	669.236
H	61344.683	16.505	659.151	669.237
I	61354.735	16.502	659.147	669.222
J	61364.786	16.525	659.141	669.205
K	61374.837	16.575	659.135	669.175
L	61384.888	16.651	659.129	669.142
℄ W. BRG. E. ABUT.	61390.133	16.701	669.125	669.125
BK. E. ABUT.	61391.525	16.715	669.124	669.124

Note: For Elevations Location Plan see sheet #3 of 31.

TOP OF SLAB ELEVATIONS
WEST BOUND LANES
F.A.I. 80 OVER F.A.U. 6081 (LaSalle RD.)
SECTION (50-2)HB-2
STATION 613+50.85
LaSALLE COUNTY
STRUCTURE NUMBERS 050-0228 & 0229

FOR INFORMATION ONLY

MODEL: Default
FILE NAME: \\QuiggProjects\2018\18L018 Various Structure IDOT D3 Farnsworth PTB 161-21\Work Order 14 - I-80 Roadway and other\CADD\CADD Sheets\Existing Bridge Plans\0366H21-Int-Existing Bridge Plans 0228-0229-004.dgn

QUIGG ENGINEERING INC

USER NAME = mwilson	DESIGNED -	REVISED -	
	DRAWN -	REVISED -	
PLOT SCALE = 2.0000 ' / in.	CHECKED -	REVISED -	
PLOT DATE = 10/2/2019	DATE - 10/4/2019	REVISED -	

STATE OF ILLINOIS
DEPARTMENT OF TRANSPORTATION

EXISTING STRUCTURAL PLANS
STRUCTURE NO. 050-0228/0229

SCALE: SHEET 4 OF 30 SHEETS STA. TO STA.

F.A.I RTE.	SECTION	COUNTY	TOTAL SHEETS	SHEET NO.
80	50-2(HB-2)BDR(HB-1)BR(BR)BR-1	LASALLE	328	209
		CONTRACT NO. 66H21		
		ILLINOIS FED. AID PROJECT		

ROUTE NO.	SECTION	COUNTY	TOTAL SHEETS	SHEET NO.
F.A.I. 80	*	LaSALLE	196	43
FED. ROAD DIST. NO. 7	ILLINOIS	PROJECT-		

SHEET 5 OF 31

*(50-2)HBR-1, HB-2, BR

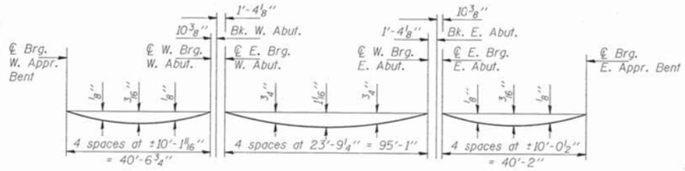

DEAD LOAD DEFLECTION DIAGRAM

(Includes weight of concrete, excluding beams)

Note: The above deflections are not to be used in the field if the engineer is working from the grade elevations adjusted for dead load deflections as shown below.

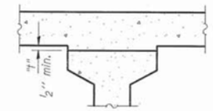

To determine "t": After all precast prestressed beams have been erected, elevations of the top flanges of the beams shall be taken at intervals shown below. These elevations subtracted from the "Theoretical Grade Elevations Adjusted for Dead Load Deflections" minus slab thickness, equals the fillet heights "t" above top flanges of beams.

FILLET HEIGHTS

BEAM 7

Location	Station	Offset	Theoretical Grade Elevations	Theoretical Grade Elevations Adjusted For Dead Load Deflection
BK. E. ABUT.	61404.700	-16.335	668.117	668.117
℄ E. BRG. E. ABUT	61405.557	-16.340	668.116	668.116
M	61415.505	-16.391	668.101	668.111
N	61425.454	-16.415	668.085	668.101
O	61435.403	-16.413	668.069	668.079
℄ BRG. E. APPR. BENT	61445.513	-16.385	668.052	668.052
END E. APPR. SLAB	61446.359	-16.381	668.050	668.050
BK. E. APPR. BENT	61446.872	-16.379	668.049	668.049

BEAM 8

Location	Station	Offset	Theoretical Grade Elevations	Theoretical Grade Elevations Adjusted For Dead Load Deflection
BK. E. ABUT.	61406.629	-9.014	668.334	668.334
℄ E. BRG. E. ABUT	61407.484	-9.019	668.333	668.333
M	61417.413	-9.064	668.318	668.328
N	61427.343	-9.064	668.302	668.318
O	61437.273	-9.077	668.286	668.296
℄ BRG. E. APPR. BENT	61447.364	-9.043	668.269	668.269
END E. APPR. SLAB	61448.208	-9.039	668.267	668.267
BK. E. APPR. BENT	61448.721	-9.037	668.266	668.266

BEAM 9

Location	Station	Offset	Theoretical Grade Elevations	Theoretical Grade Elevations Adjusted For Dead Load Deflection
BK. E. ABUT.	61408.550	-1.692	668.551	668.551
℄ E. BRG. E. ABUT	61409.403	-1.697	668.550	668.550
M	61419.314	-1.737	668.535	668.545
N	61429.225	-1.751	668.519	668.535
O	61439.136	-1.740	668.503	668.513
℄ BRG. E. APPR. BENT	61449.208	-1.701	668.485	668.485
END E. APPR. SLAB	61450.050	-1.697	668.484	668.484
BK. E. APPR. BENT	61450.562	-1.694	668.483	668.483

P.G. AND ℄ ROADWAY

Location	Station	Offset	Theoretical Grade Elevations	Theoretical Grade Elevations Adjusted For Dead Load Deflection
BK. E. ABUT.	61408.992	.000	668.601	668.601
℄ E. BRG. E. ABUT.	61409.845	.000	668.600	668.600
M	61419.752	.000	668.586	668.597
N	61429.658	.000	668.571	668.587
O	61439.565	.000	668.554	668.565
℄ BRG. E. APPR. BENT	61449.632	.000	668.536	668.536
END E. APPR. SLAB	61450.473	.000	668.534	668.534
BK. E. APPR. BENT	61450.984	.000	668.533	668.533

BEAM 10

Location	Station	Offset	Theoretical Grade Elevations	Theoretical Grade Elevations Adjusted For Dead Load Deflection
BK. E. ABUT.	61410.464	5.631	668.768	668.768
℄ E. BRG. E. ABUT	61411.316	5.627	668.767	668.767
M	61421.208	5.591	668.752	668.762
N	61431.100	5.582	668.736	668.752
O	61440.992	5.598	668.720	668.730
℄ BRG. E. APPR. BENT	61451.045	5.642	668.702	668.702
END E. APPR. SLAB	61451.885	5.647	668.701	668.701
BK. E. APPR. BENT	61452.396	5.650	668.700	668.700

BEAM 11

Location	Station	Offset	Theoretical Grade Elevations	Theoretical Grade Elevations Adjusted For Dead Load Deflection
BK. E. ABUT.	61412.371	12.955	668.986	668.986
℄ E. BRG. E. ABUT	61413.221	12.951	668.984	668.984
M	61423.094	12.921	668.969	668.979
N	61432.968	12.916	668.953	668.969
O	61442.841	12.937	668.936	668.947
℄ BRG. E. APPR. BENT	61452.874	12.986	668.919	668.919
END E. APPR. SLAB	61453.714	12.991	668.917	668.917
BK. E. APPR. BENT	61454.223	12.994	668.916	668.916

BEAM 12

Location	Station	Offset	Theoretical Grade Elevations	Theoretical Grade Elevations Adjusted For Dead Load Deflection
BK. E. ABUT.	61414.270	20.279	669.203	669.203
℄ E. BRG. E. ABUT	61415.119	20.276	669.201	669.201
M	61424.973	20.251	669.186	669.196
N	61434.828	20.251	669.170	669.186
O	61444.683	20.277	669.153	669.164
℄ BRG. E. APPR. BENT	61454.697	20.330	669.136	669.136
END E. APPR. SLAB	61455.535	20.336	669.134	669.134
BK. E. APPR. BENT	61456.043	20.340	669.133	669.133

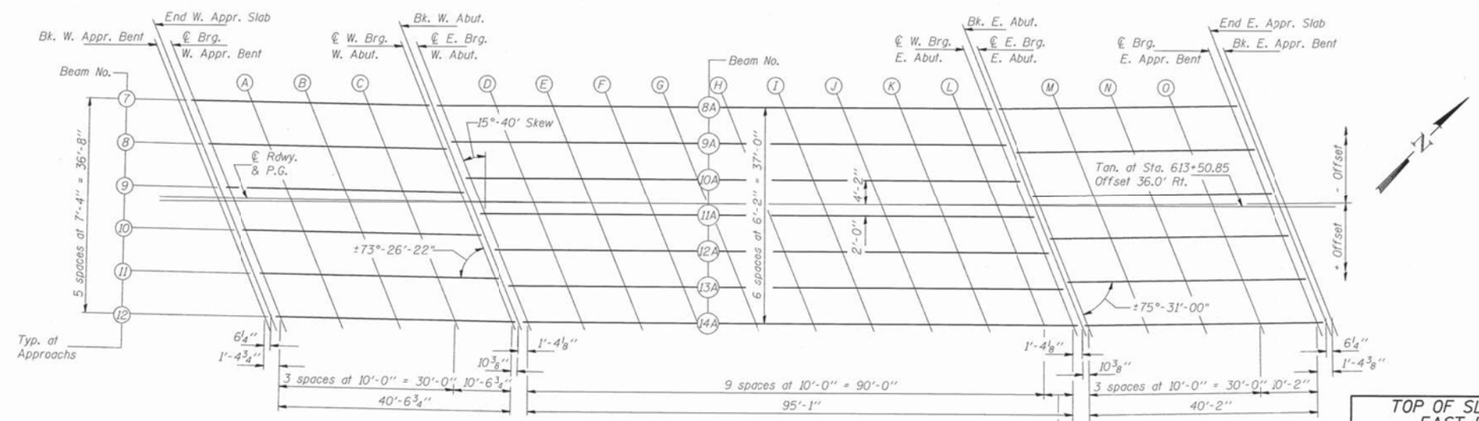

WEST APPROACH

PLAN

All horizontal dimensions are measured along the beams.

EAST APPROACH

PI-E

TOP OF SLAB ELEVATIONS EAST BOUND LANES

F.A.I. 80 OVER F.A.U. 6081 (LaSalle RD.)
SECTION (50-2) HB-2
STATION 613+50.85
LaSALLE COUNTY
STRUCTURE NUMBERS 050-0228 & 0229

FOR INFORMATION ONLY

MODEL: Default
FILE NAME: \\QuiggProjects\2018\18L018 Various Structure IDOT D3 Farnsworth PTB 161-21\Work Order 14 - I-80 Roadway and other\CADD\CADD Sheets\Existing Bridge Plans\D366H21-int-Existing Bridge Plans 0228-0229-005.dgn

QUIGG ENGINEERING INC

USER NAME = mwilson	DESIGNED -	REVISED -	
	DRAWN -	REVISED -	
PLOT SCALE = 2.0000 ' / in.	CHECKED -	REVISED -	
PLOT DATE = 10/2/2019	DATE - 10/4/2019	REVISED -	

STATE OF ILLINOIS
DEPARTMENT OF TRANSPORTATION

EXISTING STRUCTURAL PLANS
STRUCTURE NO. 050-0228/0229

SCALE: | SHEET 5 OF 30 SHEETS | STA. | TO STA.

F.A.I RTE.	SECTION	COUNTY	TOTAL SHEETS	SHEET NO.
80	50-2(HB-2)BDR(HB-1)BR(BR)BR-1	LASALLE	328	210
		CONTRACT NO. 66H21		
		ILLINOIS FED. AID PROJECT		

ROUTE NO.	SECTION	COUNTY	TOTAL SHEETS	SHEET NO.
F.A.I. 80	*	LaSALLE	196	44
FED. ROAD DIST. NO. 7	ILLINOIS	PROJECT-		

SHEET 6 OF 31

P.G. AND ℄ ROADWAY *(50-2)HBR-1, HB-2, BR

BEAM 7

Location	Station	Offset	Theoretical Grade Elevations	Theoretical Grade Elevations Adjusted For Dead Load Deflection
BK. W. APPR. BENT	61264.849	-16.327	668.150	668.150
END W. APPR. SLAB	61265.368	-16.330	668.150	668.150
℄ BRG. W. APPR. BENT	61266.232	-16.336	668.151	668.151
A	61276.181	-16.388	668.156	668.166
B	61286.139	-16.415	668.161	668.176
C	61296.079	-16.415	668.165	668.175
℄ W. BRG. W. ABUT	61306.584	-16.387	668.168	668.168
BK. W. ABUT	61307.449	-16.384	668.169	668.169

BEAM 8

Location	Station	Offset	Theoretical Grade Elevations	Theoretical Grade Elevations Adjusted For Dead Load Deflection
BK. W. APPR. BENT	61267.064	-9.008	668.371	668.371
END W. APPR. SLAB	61267.582	-9.011	668.371	668.371
℄ BRG. W. APPR. BENT	61268.445	-9.017	668.372	668.372
A	61278.375	-9.063	668.377	668.387
B	61288.305	-9.084	668.382	668.397
C	61298.235	-9.079	668.386	668.396
℄ W. BRG. W. ABUT	61308.720	-9.045	668.389	668.389
BK. W. ABUT	61309.583	-9.041	668.389	668.389

BEAM 9

Location	Station	Offset	Theoretical Grade Elevations	Theoretical Grade Elevations Adjusted For Dead Load Deflection
BK. W. APPR. BENT	61269.271	-1.688	668.592	668.592
END W. APPR. SLAB	61269.789	-1.691	668.593	668.593
℄ BRG. W. APPR. BENT	61270.650	-1.696	668.593	668.593
A	61280.561	-1.737	668.598	668.608
B	61290.472	-1.752	668.603	668.618
C	61300.383	-1.741	668.606	668.617
℄ W. BRG. W. ABUT	61310.848	-1.702	668.610	668.610
BK. W. ABUT	61311.709	-1.697	668.610	668.610

P.G. AND ℄ ROADWAY

Location	Station	Offset	Theoretical Grade Elevations	Theoretical Grade Elevations Adjusted For Dead Load Deflection
BK. W. APPR. BENT	61269.781	.000	668.643	668.643
END W. APPR. SLAB	61270.298	.000	668.644	668.644
℄ BRG. W. APPR. BENT	61271.162	.000	668.644	668.644
A	61281.068	.000	668.651	668.661
B	61290.975	.000	668.655	668.671
C	61300.881	.000	668.659	668.669
℄ W. BRG. W. ABUT.	61311.342	.000	668.661	668.661
BK. W. ABUT.	61312.200	.000	668.661	668.661

BEAM 10

Location	Station	Offset	Theoretical Grade Elevations	Theoretical Grade Elevations Adjusted For Dead Load Deflection
BK. W. APPR. BENT	61271.470	5.632	668.813	668.813
END W. APPR. SLAB	61271.985	5.630	668.814	668.814
℄ BRG. W. APPR. BENT	61272.845	5.626	668.814	668.814
A	61282.739	5.590	668.819	668.829
B	61292.633	5.581	668.823	668.839
C	61302.523	5.598	668.827	668.838
℄ W. BRG. W. ABUT	61312.968	5.643	668.830	668.830
BK. W. ABUT	61313.827	5.648	668.830	668.830

BEAM 11

Location	Station	Offset	Theoretical Grade Elevations	Theoretical Grade Elevations Adjusted For Dead Load Deflection
BK. W. APPR. BENT	61273.660	12.955	669.035	669.035
END W. APPR. SLAB	61274.176	12.952	669.035	669.035
℄ BRG. W. APPR. BENT	61275.034	12.949	669.035	669.035
A	61284.907	12.919	669.040	669.050
B	61294.781	12.915	669.044	669.060
C	61304.654	12.938	669.048	669.058
℄ W. BRG. W. ABUT	61315.080	12.989	669.051	669.051
BK. W. ABUT	61315.938	12.995	669.051	669.051

BEAM 12

Location	Station	Offset	Theoretical Grade Elevations	Theoretical Grade Elevations Adjusted For Dead Load Deflection
BK. W. APPR. BENT	61275.843	20.278	669.256	669.256
END W. APPR. SLAB	61276.357	20.276	669.256	669.256
℄ BRG. W. APPR. BENT	61277.213	20.273	669.256	669.256
A	61287.068	20.249	669.261	669.271
B	61296.923	20.251	669.265	669.281
C	61306.778	20.279	669.268	669.279
℄ W. BRG. W. ABUT	61317.183	20.336	669.271	669.271
BK. W. ABUT	61318.040	20.342	669.271	669.271

BEAM 8A

Location	Station	Offset	Theoretical Grade Elevations	Theoretical Grade Elevations Adjusted For Dead Load Deflection
BK. W. ABUT.	61307.487	-16.253	668.173	668.173
℄ E. BRG. W. ABUT.	61308.824	-16.268	668.172	668.172
D	61318.772	-16.365	668.170	668.196
E	61328.721	-16.436	668.167	668.220
F	61338.670	-16.480	668.164	668.233
G	61348.619	-16.499	668.160	668.240
H	61358.569	-16.492	668.155	668.241
I	61368.518	-16.459	668.149	668.224
J	61378.466	-16.400	668.143	668.207
K	61388.415	-16.314	668.136	668.176
L	61398.363	-16.203	668.129	668.142
℄ W. BRG. E. ABUT.	61403.420	-16.136	668.125	668.125
BK. E. ABUT.	61404.756	-16.118	668.123	668.123

BEAM 9A

Location	Station	Offset	Theoretical Grade Elevations	Theoretical Grade Elevations Adjusted For Dead Load Deflection
BK. W. ABUT.	61309.275	-10.106	668.357	668.357
℄ E. BRG. W. ABUT.	61310.609	-10.120	668.357	668.357
D	61320.542	-10.212	668.355	668.381
E	61330.475	-10.279	668.352	668.404
F	61340.408	-10.319	668.348	668.417
G	61350.341	-10.333	668.344	668.424
H	61360.274	-10.322	668.339	668.425
I	61370.207	-10.284	668.333	668.408
J	61380.140	-10.220	668.327	668.391
K	61390.072	-10.131	668.320	668.360
L	61400.004	-10.015	668.312	668.326
℄ W. BRG. E. ABUT.	61405.053	-9.946	668.308	668.308
BK. E. ABUT.	61406.387	-9.927	668.307	668.307

BEAM 10A

Location	Station	Offset	Theoretical Grade Elevations	Theoretical Grade Elevations Adjusted For Dead Load Deflection
BK. W. ABUT.	61311.056	-3.958	668.542	668.542
℄ E. BRG. W. ABUT.	61312.389	-3.971	668.542	668.542
D	61322.305	-4.059	668.539	668.565
E	61332.222	-4.121	668.536	668.589
F	61342.140	-4.157	668.532	668.602
G	61352.057	-4.166	668.528	668.608
H	61361.974	-4.150	668.523	668.609
I	61371.891	-4.108	668.517	668.592
J	61381.808	-4.040	668.511	668.575
K	61391.725	-3.946	668.504	668.543
L	61401.641	-3.826	668.496	668.509
℄ W. BRG. E. ABUT.	61406.681	-3.755	668.492	668.492
BK. E. ABUT.	61408.013	-3.735	668.491	668.491

P.G. AND ℄ ROADWAY

Location	Station	Offset	Theoretical Grade Elevations	Theoretical Grade Elevations Adjusted For Dead Load Deflection
BK. W. ABUT.	61312.200	.000	668.661	668.661
℄ E. BRG. W. ABUT.	61313.535	.000	668.661	668.661
D	61323.442	.000	668.661	668.687
E	61333.348	.000	668.660	668.712
F	61343.255	.000	668.657	668.726
G	61353.162	.000	668.652	668.733
H	61363.068	.000	668.647	668.733
I	61372.975	.000	668.640	668.714
J	61382.882	.000	668.631	668.695
K	61392.788	.000	668.621	668.660
L	61402.695	.000	668.609	668.623
℄ W. BRG. E. ABUT.	61407.666	.000	668.603	668.603
BK. E. ABUT.	61408.992	.000	668.601	668.601

BEAM 11A

Location	Station	Offset	Theoretical Grade Elevations	Theoretical Grade Elevations Adjusted For Dead Load Deflection
BK. W. ABUT.	61312.832	2.191	668.727	668.727
℄ E. BRG. W. ABUT.	61314.163	2.178	668.726	668.726
D	61324.063	2.095	668.724	668.750
E	61333.965	2.038	668.721	668.773
F	61343.866	2.006	668.717	668.786
G	61353.767	2.001	668.712	668.792
H	61363.669	2.022	668.707	668.793
I	61373.570	2.068	668.701	668.776
J	61383.471	2.141	668.695	668.759
K	61393.372	2.239	668.688	668.727
L	61403.272	2.363	668.680	668.693
℄ W. BRG. E. ABUT.	61408.304	2.436	668.675	668.675
BK. E. ABUT.	61409.634	2.457	668.674	668.674

BEAM 12A

Location	Station	Offset	Theoretical Grade Elevations	Theoretical Grade Elevations Adjusted For Dead Load Deflection
BK. W. ABUT.	61314.602	8.341	668.911	668.911
℄ E. BRG. W. ABUT.	61315.931	8.328	668.911	668.911
D	61325.816	8.250	668.908	668.934
E	61335.701	8.197	668.905	668.957
F	61345.587	8.170	668.901	668.970
G	61355.472	8.170	668.896	668.977
H	61365.358	8.195	668.891	668.977
I	61375.244	8.245	668.885	668.960
J	61385.129	8.322	668.879	668.942
K	61395.013	8.425	668.871	668.911
L	61404.897	8.554	668.863	668.877
℄ W. BRG. E. ABUT.	61409.921	8.629	668.859	668.859
BK. E. ABUT.	61411.256	8.650	668.858	668.858

BEAM 13A

Location	Station	Offset	Theoretical Grade Elevations	Theoretical Grade Elevations Adjusted For Dead Load Deflection
BK. W. ABUT.	61316.367	14.491	669.096	669.096
℄ E. BRG. W. ABUT.	61317.693	14.479	669.095	669.095
D	61327.563	14.405	669.093	669.119
E	61337.432	14.357	669.089	669.142
F	61347.302	14.335	669.085	669.155
G	61357.172	14.339	669.080	669.161
H	61367.042	14.368	669.075	669.161
I	61376.912	14.423	669.069	669.144
J	61386.781	14.505	669.062	669.126
K	61396.650	14.612	669.055	669.095
L	61406.518	14.744	669.047	669.060
℄ W. BRG. E. ABUT.	61411.534	14.822	669.043	669.043
BK. E. ABUT.	61412.860	14.843	669.042	669.042

BEAM 14A

Location	Station	Offset	Theoretical Grade Elevations	Theoretical Grade Elevations Adjusted For Dead Load Deflection
BK. W. ABUT.	61318.126	20.642	669.280	669.280
℄ E. BRG. W. ABUT.	61319.450	20.631	669.280	669.280
D	61329.304	20.562	669.277	669.303
E	61339.158	20.518	669.274	669.326
F	61349.012	20.501	669.269	669.339
G	61358.866	20.509	669.265	669.345
H	61368.720	20.543	669.259	669.345
I	61378.574	20.602	669.253	669.328
J	61388.428	20.686	669.246	669.310
K	61398.281	20.799	669.239	669.278
L	61408.133	20.936	669.231	669.244
℄ W. BRG. E. ABUT.	61413.141	21.016	669.226	669.226
BK. E. ABUT.	61414.465	21.038	669.225	669.225

Note: For Elevations Location Plan see sheet #5 of 31.

TOP OF SLAB ELEVATIONS
EAST BOUND LANES
F.A.I. 80 OVER F.A.U. 6081 (LaSalle RD.)
SECTION (50-2) HB-2
STATION 613+50.85
LaSALLE COUNTY
STRUCTURE NUMBERS 050-0228 & 0229

FOR INFORMATION ONLY

MODEL: Default
FILE NAME: \\QuigpProjects2018\18\018 Various Structure IDOT D3 Farnsworth PTB 161-21\Work Order 14 - I-80 Roadway and other\CADD\CADD Sheets\Existing Bridge Plans\D3661F21-Int-Existing Bridge Plans 0228-0229-006.dgn

QUIGG ENGINEERING INC

USER NAME = mwilson	DESIGNED -	REVISED -	
	DRAWN -	REVISED -	
PLOT SCALE = 2.0000 ' / in.	CHECKED -	REVISED -	
PLOT DATE = 10/2/2019	DATE - 10/4/2019	REVISED -	

STATE OF ILLINOIS
DEPARTMENT OF TRANSPORTATION

EXISTING STRUCTURAL PLANS
STRUCTURE NO. 050-0228/0229

SCALE: SHEET 6 OF 30 SHEETS STA. TO STA.

F.A.I RTE.	SECTION	COUNTY	TOTAL SHEETS	SHEET NO.
80	50-2(HB-2)BDR(HB-1)BR(BR)BR-1	LASALLE	328	211
		CONTRACT NO. 66H21		
	ILLINOIS	FED. AID PROJECT		

ROUTE NO.	SECTION	COUNTY	TOTAL SHEETS	SHEET NO.
F.A.I. 80	*	LaSALLE	196	45
FED. ROAD DIST. NO. 7	ILLINOIS	PROJECT-		

SHEET 7 OF 31
*(50-2)HBR-I, HB-2, BR

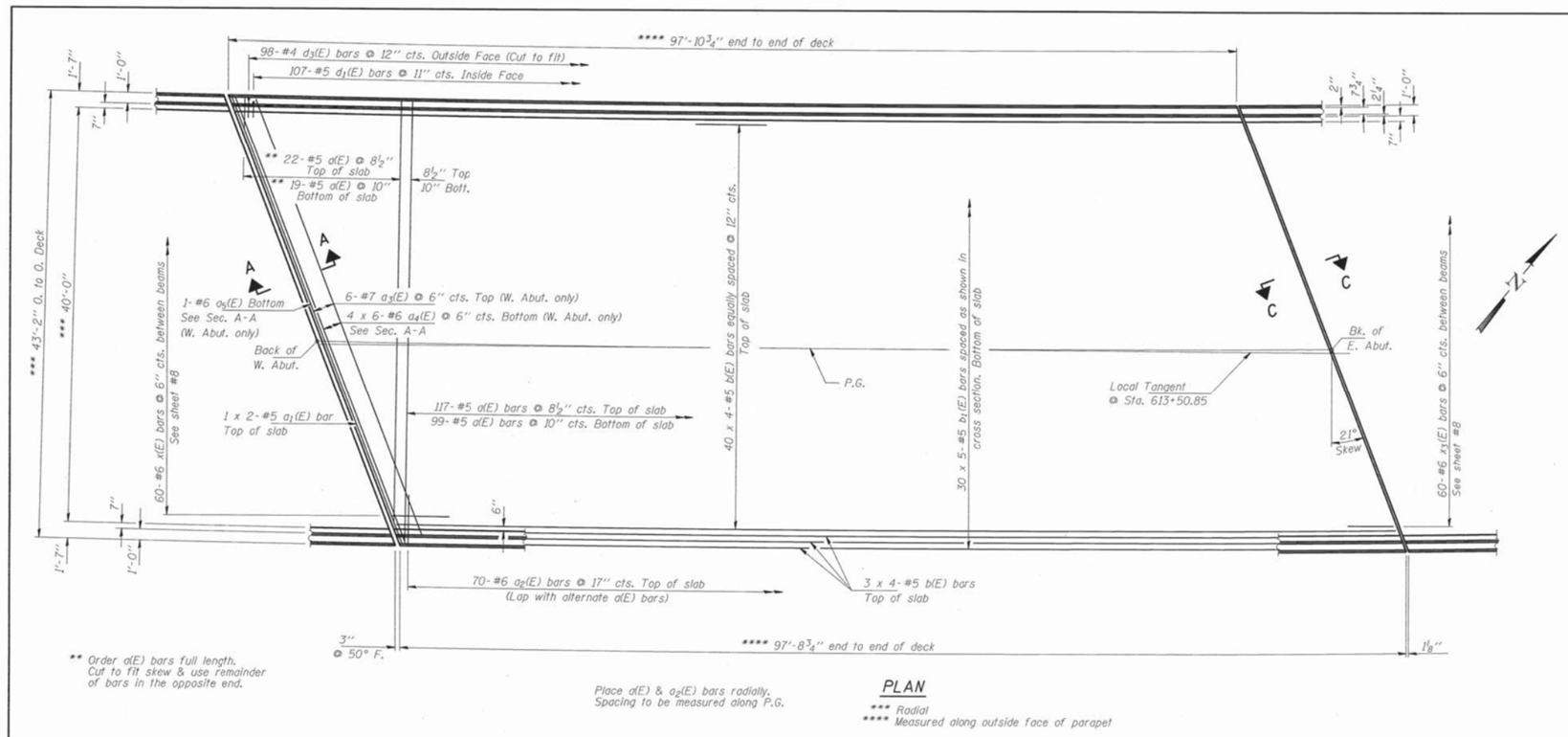

** Order a(E) bars full length. Cut to fit skew & use remainder of bars in the opposite end.

Place a(E) & a2(E) bars radially. Spacing to be measured along P.G.

PLAN

*** Radial
**** Measured along outside face of parapet

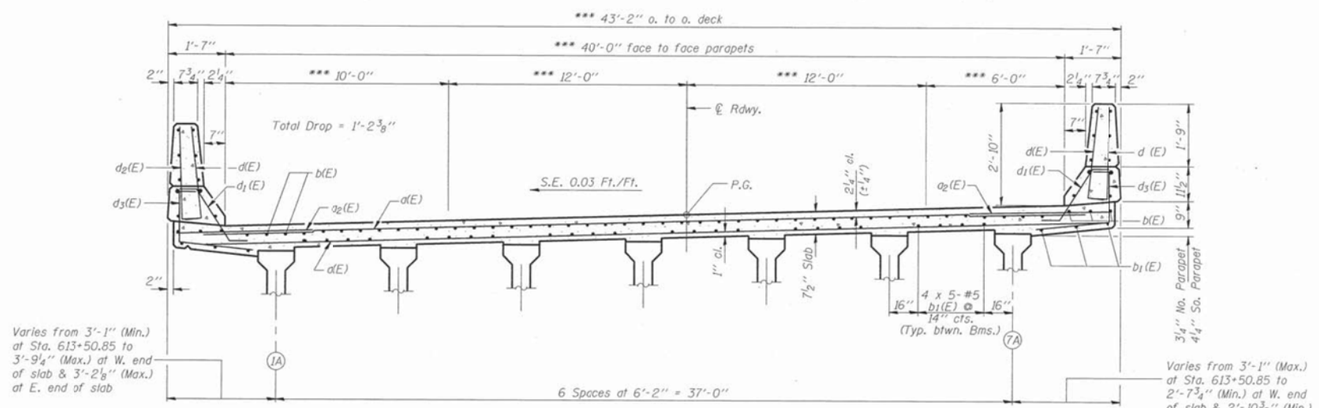

CROSS SECTION

(Looking East)

Notes: See sheet #8 of 31 for superstructure details and Bill of Material.
See sheet #9 of 31 for sections at Abutments.
Reinforcement bars designated (E) shall be epoxy coated.
Bars indicated thus 20 x 3-#5 etc. indicates 20 lines of bars with 3 lengths per line.

MIN BAR LAPS

#5 bar = 2'-2"

SUPERSTRUCTURE
WEST BOUND LANES
F.A.I. 80 OVER F.A.I. 6081 (LaSalle RD.)
SECTION (50-2) HB-2
STATION 613+50.85
LaSALLE COUNTY
STRUCTURE NUMBERS 050-0228 & 0229

FOR INFORMATION ONLY

MODEL: Default
FILE NAME: \\QuiggProjects\2018\L018 Various Structure IDOT D3 Farnsworth PTB 161-21\Work Order 14 - I-80 Roadway and other\CADD\CADD Sheets\Existing Bridge Plans\D366H21-sht-Existing Bridge Plans 0228-0229-007.dgn

QUIGG ENGINEERING INC

USER NAME = mwilson	DESIGNED -	REVISED -	
	DRAWN -	REVISED -	
PLOT SCALE = 2.0000 ' / in.	CHECKED -	REVISED -	
PLOT DATE = 10/2/2019	DATE - 10/4/2019	REVISED -	

STATE OF ILLINOIS
DEPARTMENT OF TRANSPORTATION

EXISTING STRUCTURAL PLANS
STRUCTURE NO. 050-0228/0229

SCALE: | SHEET 7 OF 30 SHEETS | STA. | TO STA.

F.A.I RTE.	SECTION	COUNTY	TOTAL SHEETS	SHEET NO.
80	50-2(HB-2)BDR(HB-1)BR(BR)BR-1	LASALLE	328	212
		CONTRACT NO. 66H21		
	ILLINOIS	FED. AID PROJECT		

ROUTE NO.	SECTION	COUNTY	TOTAL SHEETS	SHEET NO.
F.A.I. 80	*	LaSALLE	196	46
FED. ROAD DIST. NO. 7		ILLINOIS	PROJECT-	

SHEET 8 OF 31
*(50-2)HBR-I, HB-2, BR

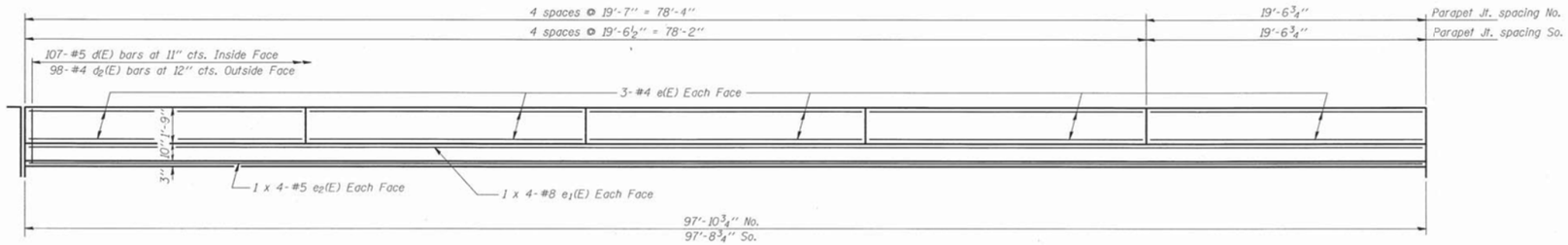

INSIDE ELEVATION OF PARAPET

All dimensions are along outside face of parapet.

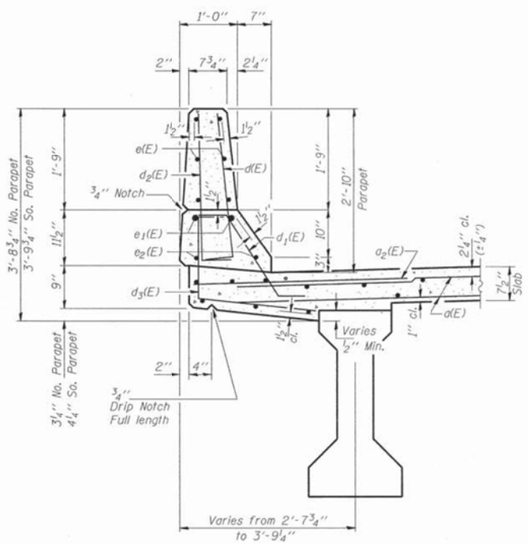

SECTION THRU PARAPET

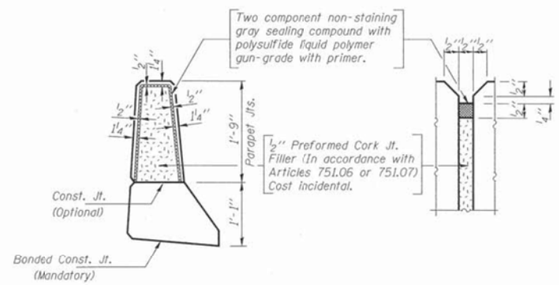

PARAPET JOINT DETAILS

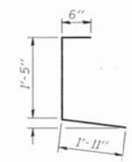

BAR d_3(E)

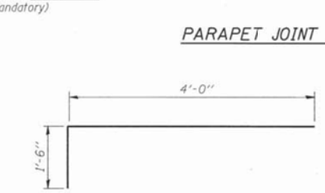

BAR x_3(E)

BARS s_1(E)

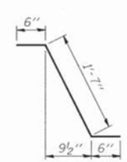

BAR d_1(E)

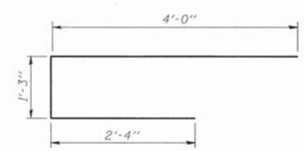

BAR x(E)

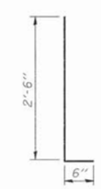

BARS d(E) & d_2(E)

MIN BAR LAPS

#5 bar = 2'-2"
#8 bar = 4'-6"

SUPERSTRUCTURE BILL OF MATERIAL

Bar	No.	Size	Length	Shape
a(E)	257	#5	41'-2"	
a_1(E)	4	#5	24'-1"	
a_2(E)	140	#6	4'-0"	
a_3(E)	6	#7	46'-0"	
a_4(E)	24	#6	5'-3"	
a_5(E)	1	#6	46'-0"	
b(E)	184	#5	26'-2"	
b_1(E)	150	#5	21'-4"	
d(E)	214	#5	3'-0"	
d_1(E)	214	#5	2'-7"	
d_2(E)	196	#4	3'-0"	
d_3(E)	196	#4	3'-10"	
e(E)	60	#4	19'-4"	
e_1(E)	16	#8	27'-11"	
e_2(E)	16	#5	26'-2"	
m(E)	24	#4	6'-0"	
m_1(E)	12	#6	6'-0"	
s_1(E)	30	#5	10'-0"	
x(E)	120	#6	7'-7"	
x_3(E)	60	#6	5'-6"	
Reinforcement Bars, Epoxy Coated			Lbs.	28080
Concrete Superstructure			Cu. Yds.	137.7

Reinforcement bars designated (E) shall be epoxy coated.
Bars indicated thus 1 x 3-#5 etc. indicates 1 line of bars with 3 lengths per line.

SUPERSTRUCTURE DETAILS
WEST BOUND LANES
F.A.I. 80 OVER F.A.U. 6081 (LaSalle RD.)
SECTION (50-2)HB-2
STATION 613+50.85
LaSALLE COUNTY
STRUCTURE NUMBERS 050-0228 & 0229

FOR INFORMATION ONLY

MODEL: Default
FILE NAME: \\QuiggProjects\2018\L018 Various Structure IDOT D3 Farnsworth PTB 161-21\Work Order 14 - I-80 Roadway and other\CADD\CADD Sheets\Existing Bridge Plans\D366H21-int-Existing Bridge Plans 0228-0229-008.dgn

QUIGG ENGINEERING INC

USER NAME = mwilson	DESIGNED -	REVISED -	
	DRAWN -	REVISED -	
PLOT SCALE = 2.0000 ' / in.	CHECKED -	REVISED -	
PLOT DATE = 10/2/2019	DATE - 10/4/2019	REVISED -	

STATE OF ILLINOIS
DEPARTMENT OF TRANSPORTATION

EXISTING STRUCTURAL PLANS
STRUCTURE NO. 050-0228/0229

SCALE: | SHEET 8 OF 30 SHEETS | STA. | TO STA.

F.A.I RTE.	SECTION	COUNTY	TOTAL SHEETS	SHEET NO.
80	50-2(HB-2)BDR(HB-1)BR(BR)BR-1	LASALLE	328	213
		CONTRACT NO. 66H21		
	ILLINOIS	FED. AID PROJECT		

ROUTE NO.	SECTION	COUNTY	TOTAL SHEETS	SHEET NO.
F.A.I. 80	*	LaSALLE	196	47
FED. ROAD DIST. NO. 7	ILLINOIS	PROJECT-		

SHEET 9 OF 31
*(50-2)HBR-I, HB-2, BR

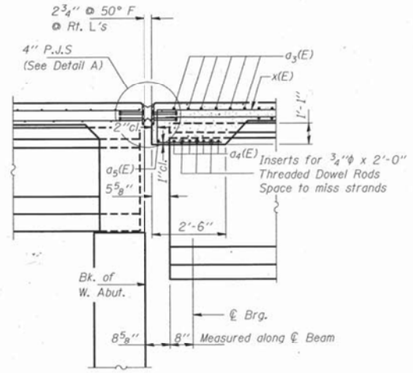

SECTION A-A
(Dimensions @ Rt. L's Unless noted)

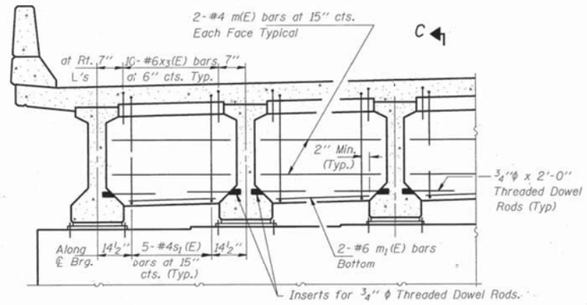

DIAPHRAGM AT EAST ABUTMENT

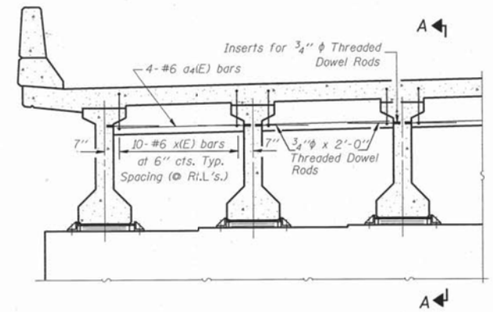

DIAPHRAGM AT WEST ABUTMENT

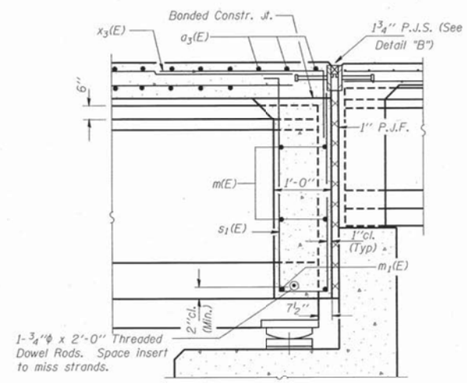

SECTION C-C
(Dimensions at Rt. Ls urless noted)

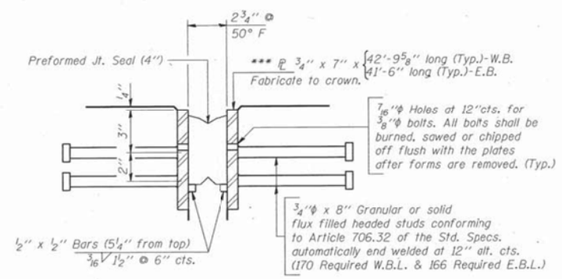

DETAIL A

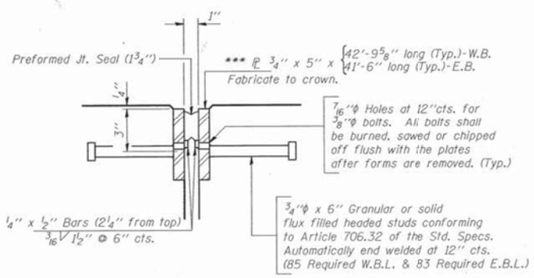

DETAIL B

*** Furnish in segments of 20 ft. maximum length. Maximum space between installed segments shall be 3/16". Seal space with Silicone Sealant suitable for Structural Steel.

Note: After fabrication, all surfaces of the steel plate shall be given one shop coat of the paint specified for structural steel. No field painting required.

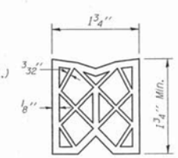

PREFORMED JOINT SEAL (1¾")

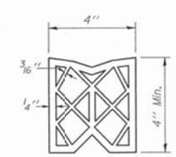

PREFORMED JOINT SEAL (4")

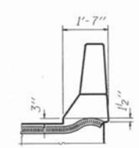

P.J.S. TYP. END TREATMENT

Note: Reinforcement bars designated (E) shall be epoxy coated.

SUPERSTRUCTURE DETAILS
WEST BOUND LANES
F.A.I. 80 OVER F.A.U. 6081 (LaSalle RD.)
SECTION (50-2)HB-2
STATION 613+50.85
LaSALLE COUNTY
STRUCTURE NUMBERS 050-0228 & 0229

FOR
INFORMATION
ONLY

MODEL: Default
FILE NAME: \\QuiggProjects\2018\18IL018 Various Structure IDOT D3 Farnsworth PTB 161-2\Work Order 14 - I-80 Roadway and other\CADD\CADD Sheets\Existing Bridge Plans\0366H21-Int-Existing Bridge Plans 0228-0229-009.dgn

QUIGG ENGINEERING INC

USER NAME = mwilson	DESIGNED -	REVISED -	
	DRAWN -	REVISED -	
PLOT SCALE = 2.0000 ' / in.	CHECKED -	REVISED -	
PLOT DATE = 10/2/2019	DATE - 10/4/2019	REVISED -	

STATE OF ILLINOIS
DEPARTMENT OF TRANSPORTATION

EXISTING STRUCTURAL PLANS
STRUCTURE NO. 050-0228/0229

SCALE: | SHEET 9 OF 30 SHEETS | STA. | TO STA.

F.A.I RTE.	SECTION	COUNTY	TOTAL SHEETS	SHEET NO.
80	50-2(HB-2)BDR(HB-1)BR(BR)BR-1	LASALLE	328	214
		CONTRACT NO. 66H21		
		ILLINOIS	FED. AID PROJECT	

ROUTE NO.	SECTION	COUNTY	TOTAL SHEETS	SHEET NO.
F.A.I. 80	*	LaSALLE	196	48
FED. ROAD DIST. NO. 7	ILLINOIS	PROJECT-		

SHEET 10 OF 31
*(50-2)HBR-1, HB-2, BR

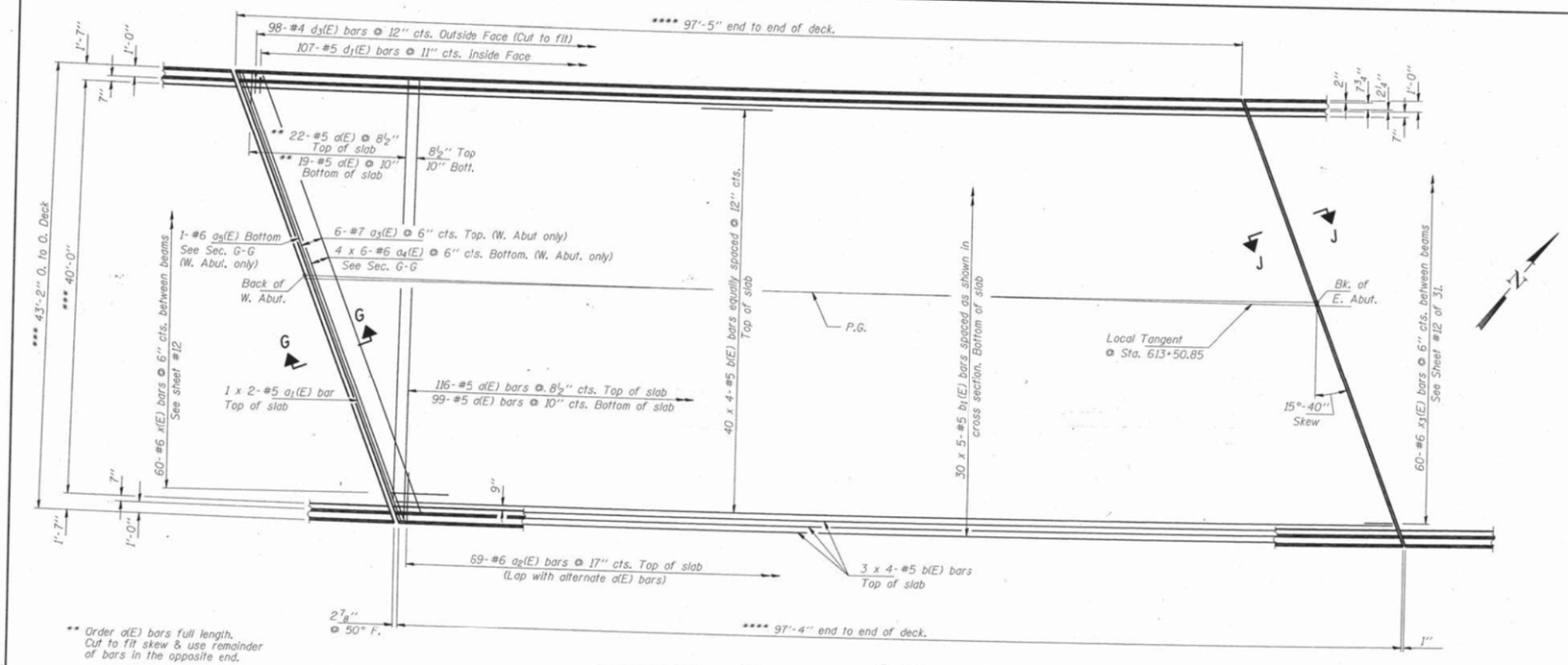

PLAN

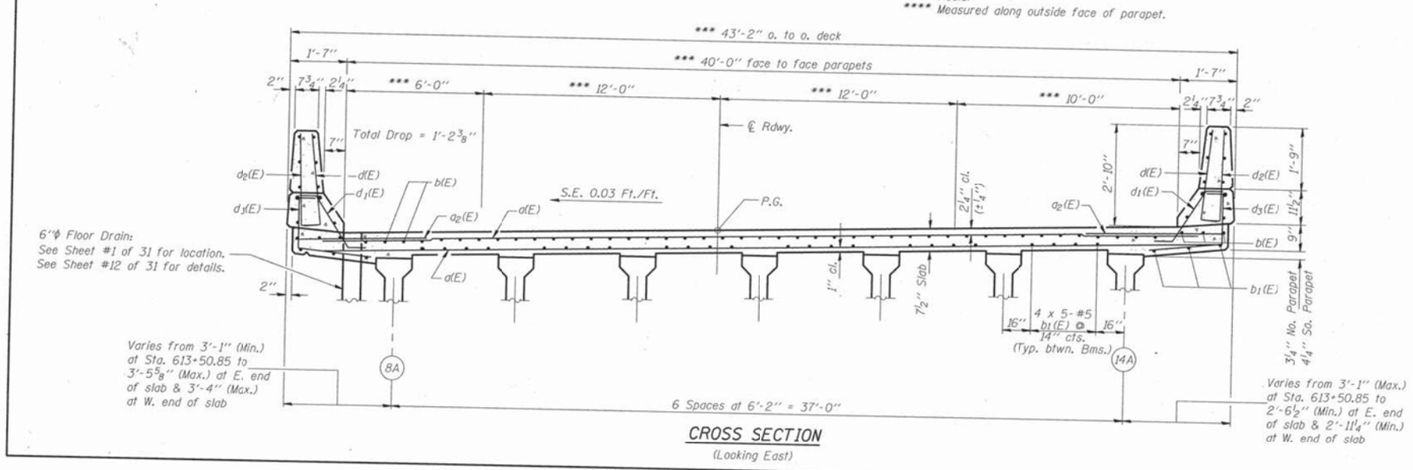

CROSS SECTION
(Looking East)

Notes: See sheet #11 of 31 for superstructure details and Bill of Material.
See sheet #12 of 31 for Section G-G
Reinforcement bars designated (E) shall be epoxy coated.
Bars indicated thus 20 x 3-#5 etc. indicates 20 lines of bars with 3 lengths per line.

MIN BAR LAPS
#5 bar = 2'-2"

SUPERSTRUCTURE-E. BOUND LANES
F.A.I. 80 OVER F.A.U. 6081 (LaSalle RD.)
SECTION (50-2)HB-2
STATION 613+50.85
LaSALLE COUNTY
STRUCTURE NUMBERS 050-0228 & 0229

FOR INFORMATION ONLY

MODEL: Default
FILE NAME: \\QuiggProjects\2018\18L018 Various Structure IDOT D3 Farnsworth PTB 161-2\Work Order 14 - I-80 Roadway and other\CADD\CADD Sheets\Existing Bridge Plans\D366H21-Int-Existing Bridge Plans 0228-0229-010.dgn

QUIGG ENGINEERING INC

USER NAME = mwilson	DESIGNED -	REVISED -	
	DRAWN -	REVISED -	
PLOT SCALE = 2.0000 ' / in.	CHECKED -	REVISED -	
PLOT DATE = 10/2/2019	DATE - 10/4/2019	REVISED -	

STATE OF ILLINOIS
DEPARTMENT OF TRANSPORTATION

EXISTING STRUCTURAL PLANS
STRUCTURE NO. 050-0228/0229

SCALE: SHEET 10 OF 30 SHEETS STA. TO STA.

F.A.I RTE.	SECTION	COUNTY	TOTAL SHEETS	SHEET NO.
80	50-2(HB-2)BDR(HB-1)BR(BR)BR-1	LASALLE	328	215
		CONTRACT NO. 66H21		
	ILLINOIS	FED. AID PROJECT		

ROUTE NO.	SECTION	COUNTY	TOTAL SHEETS	SHEET NO.
F.A.I. 80	*	LaSALLE	196	49
FED. ROAD DIST. NO. 7	ILLINOIS	PROJECT-		

SHEET 11 OF 31
*(50-2)HBR-I, HB-2, BR

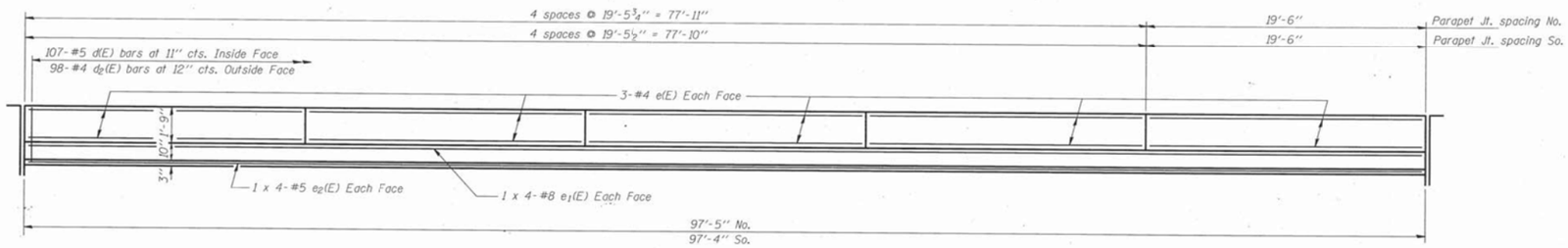

INSIDE ELEVATION OF PARAPET

All dimensions are measured along outside face of parapet.

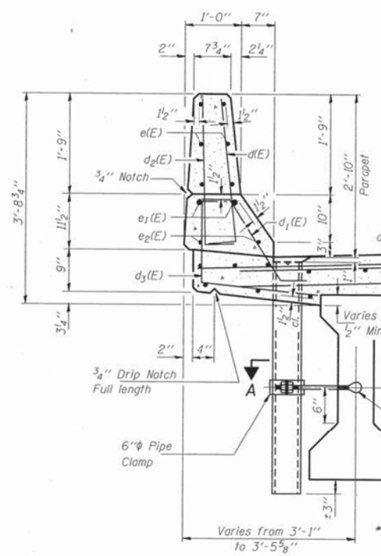

SECTION THRU NO. PARAPET

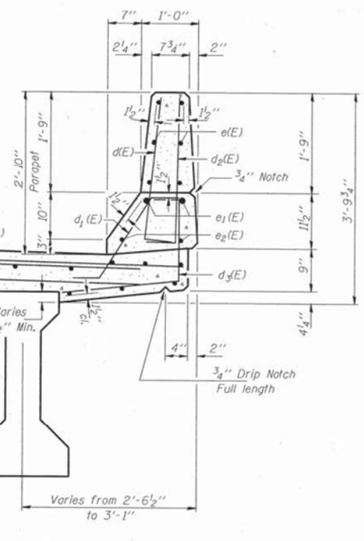

SECTION THRU SO. PARAPET

MIN BAR LAPS

#5 bar = 2'-2"
#8 bar = 4'-6"

SUPERSTRUCTURE BILL OF MATERIAL

Bar	No.	Size	Length	Shape
a(E)	256	#5	41'-2"	
a_1(E)	4	#5	24'-1"	
a_2(E)	138	#6	4'-0"	
a_3(E)	6	#7	45'-0"	
a_4(E)	24	#6	5'-3"	
a_5(E)	1	#6	45'-0"	
b(E)	184	#5	26'-2"	
b_1(E)	150	#5	21'-4"	
d(E)	214	#5	3'-0"	
d_1(E)	214	#5	2'-7"	
d_2(E)	196	#4	3'-0"	
d_3(E)	196	#4	3'-10"	
e(E)	60	#4	19'-4"	
e_1(E)	16	#8	27'-11"	
e_2(E)	16	#5	26'-2"	
m(E)	24	#4	6'-0"	
m_1(E)	12	#6	6'-0"	
s_1(E)	30	#5	10'-0"	
x(E)	120	#6	7'-7"	
x_3(E)	60	#6	5'-6"	
Reinforcement Bars, Epoxy Coated			Lbs.	28030
Concrete Superstructure			Cu. Yds.	137.1

Reinforcement bars designated (E) shall be epoxy coated.

Bars indicated thus 1 x 5-#5 etc. indicates 1 line of bars with 5 lengths per line.

For Parapet Joint Details & Bar Details, see sheet #8 of 31.

SUPERSTRUCTURE DETAILS
EAST BOUND LANES
F.A.I. 80 OVER F.A.U. 6081 (LaSalle RD.)
SECTION (50-2) HB-2
STATION 613+50.85
LaSALLE COUNTY
STRUCTURE NUMBERS 050-0228 & 0229

FOR INFORMATION ONLY

MODEL: Default
FILE NAME: \\QuiggProjects\2018\18L018 Various Structure IDOT D3 Farnsworth PTB 161-2 1\Work Order 14 - I-80 Roadway and other\CADD\CADD Sheets\Existing Bridge Plans\D36H21-1-int-Existing Bridge Plans 0228-0229-011.dgn

QUIGG ENGINEERING INC	USER NAME = mwilson	DESIGNED -	REVISED -	STATE OF ILLINOIS DEPARTMENT OF TRANSPORTATION	EXISTING STRUCTURAL PLANS STRUCTURE NO. 050-0228/0229	F.A.I RTE.	SECTION	COUNTY	TOTAL SHEETS	SHEET NO.
		DRAWN -	REVISED -			80	50-2(HB-2)BDR(HB-1)BR(BR)BR-1	LASALLE	328	216
	PLOT SCALE = 2.0000 ' / in.	CHECKED -	REVISED -					CONTRACT NO. 66H21		
	PLOT DATE = 10/2/2019	DATE - 10/4/2019	REVISED -		SCALE: SHEET 11 OF 30 SHEETS STA. TO STA.		ILLINOIS	FED. AID PROJECT		

ROUTE NO.	SECTION	COUNTY	TOTAL SHEETS	SHEET NO.
F.A.I. 80	*	LaSALLE	196	50
FED. ROAD DIST. NO. 7	ILLINOIS	PROJECT-		

SHEET 12 OF 31
*(50-2)HBR-I, HB-2, BR

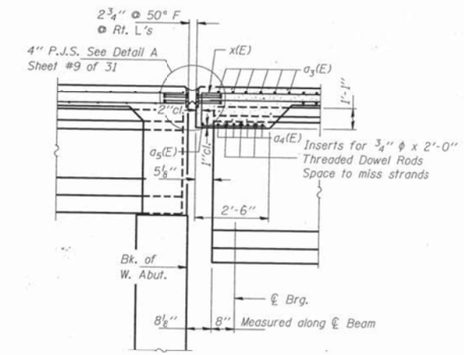

SECTION G-G
(Dimensions @ Rt. L's Unless noted)

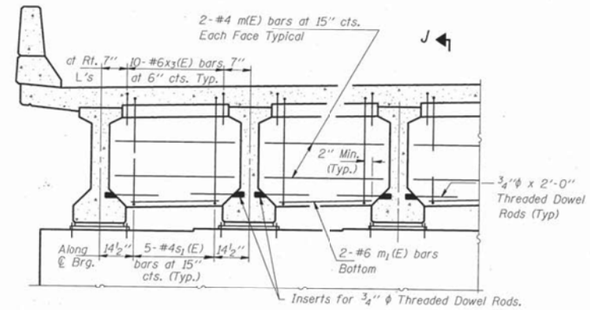

DIAPHRAGM AT EAST ABUTMENT

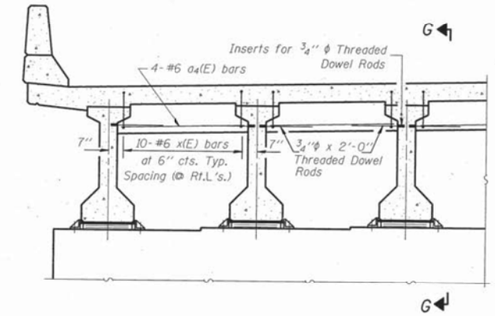

DIAPHRAGM AT WEST ABUTMENT

ALUMINUM TUBE

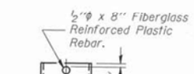

FIBERGLASS PIPE

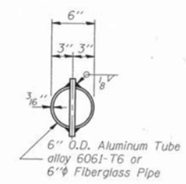

TOP PLAN
(Showing Aluminum Tube)

Notes:

Fiberglass pipe shall conform to ASTM D2996. with short-time rupture strength hoop tensile stress of 30,000 p.s.i. minimum. The surface of the Fiberglass pipe shall be free of bond inhibiting agents.

The exterior surfaces of the floor drains shall be coated by the manufacturer with a pigment that matches the color of the concrete.

The clamping device and inserts shall be galvanized in accordance with AASHTO M-232.

Reinforcement bars designated (E) shall be epoxy coated.

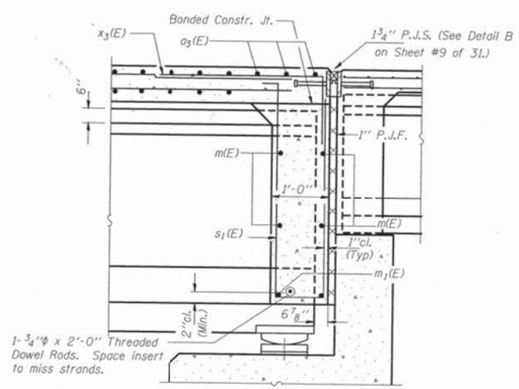

SECTION J-J
(Dimensions at Rt. Ls unless noted)

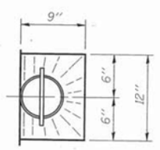

TOP PLAN

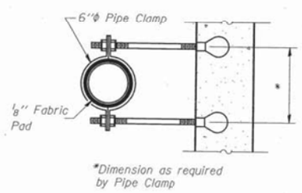

*Dimension as required
by Pipe Clamp

SECTION A-A

SUPERSTRUCTURE DETAILS
EAST BOUND LANES
F.A.I. 80 OVER F.A.U. 6081 (LaSalle RD.)
SECTION (50-2) HB-2
STATION 613+50.85
LaSALLE COUNTY
STRUCTURE NUMBERS 050-0228 & 0229

FOR INFORMATION ONLY

MODEL: Default
FILE NAME: \\QuiggProjects\2018\18L018 Various Structure IDOT D3 Farnsworth PTB 161-2 1\Work Order 14 - I-80 Roadway and other\CADD\CADD Sheets\Existing Bridge Plans\D36H21-1-int-Existing Bridge Plans 0228-0229-012.dgn

QUIGG ENGINEERING INC

USER NAME = mwilson	DESIGNED -	REVISED -	
	DRAWN -	REVISED -	
PLOT SCALE = 2.0000 ' / in.	CHECKED -	REVISED -	
PLOT DATE = 10/2/2019	DATE - 10/4/2019	REVISED -	

STATE OF ILLINOIS
DEPARTMENT OF TRANSPORTATION

EXISTING STRUCTURAL PLANS
STRUCTURE NO. 050-0228/0229

SCALE: | SHEET 12 OF 30 SHEETS | STA. | TO STA.

F.A.I RTE.	SECTION	COUNTY	TOTAL SHEETS	SHEET NO.
80	50-2(HB-2)BDR(HB-1)BR(BR)BR-1	LASALLE	328	217
		CONTRACT NO. 66H21		
	ILLINOIS	FED. AID PROJECT		

ROUTE NO.	SECTION	COUNTY	TOTAL SHEETS	SHEET NO.
F.A.I. 80	*	LaSALLE	196	51
FED. ROAD DIST. NO. 7	ILLINOIS	PROJECT-		

SHEET 13 OF 31
*(50-2)HBR-1, HB-2, BR

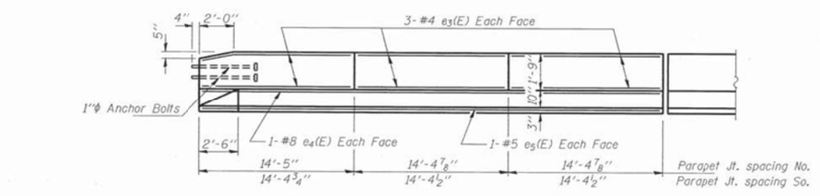

WEST PARAPET

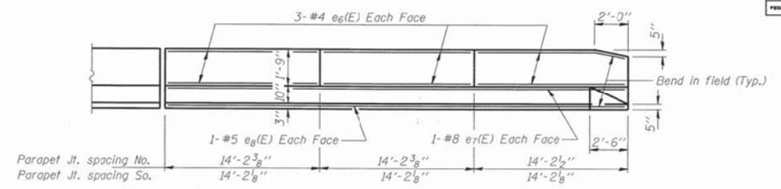

EAST PARAPET

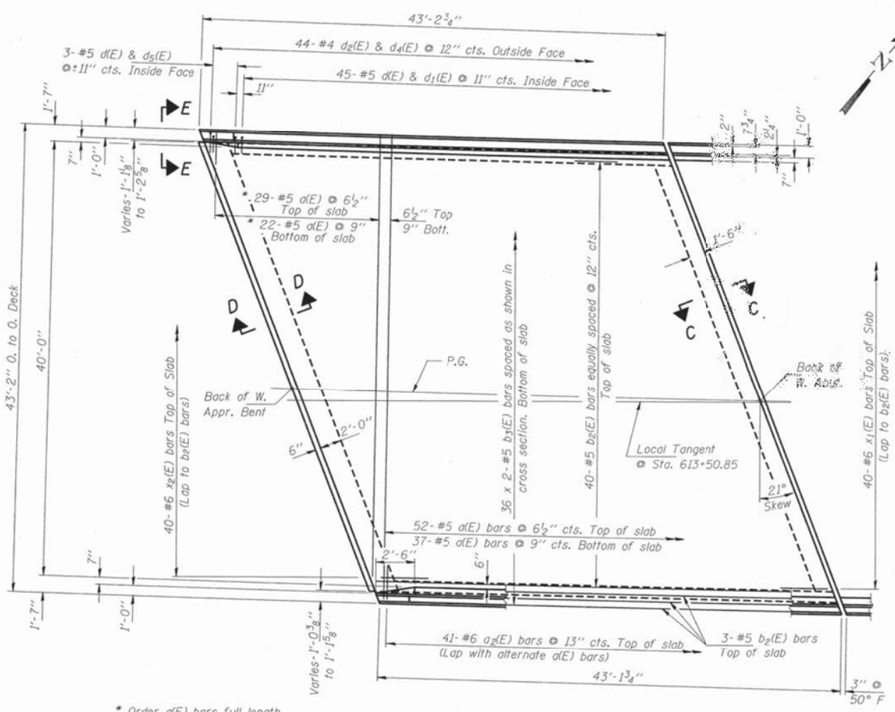

WEST APPROACH

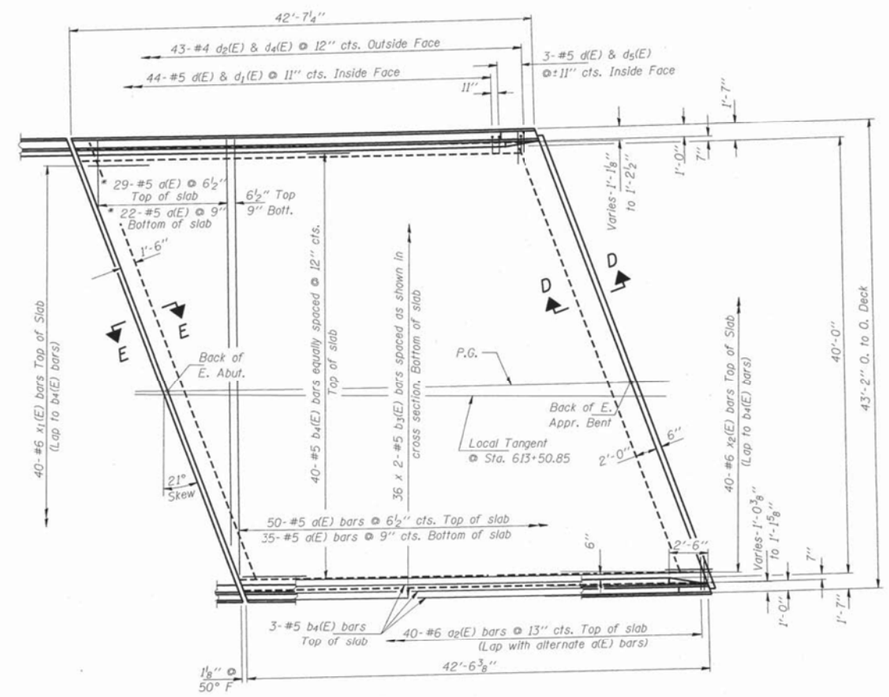

EAST APPROACH

* Order d(E) bars full length. Cut to fit skew & use remainder of bars in the opposite end.

Place d(E) & a2(E) bars radially. Spacing to be measured along P.G.

All transverse dimensions are radial. All longitudinal dimensions are measured along outside face of parapet.

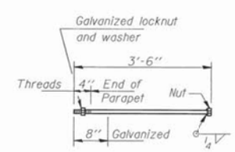

1"ϕ ANCHOR BOLT
(Cost Incidental)

MIN BAR LAPS
#5 bar = 2'-2"

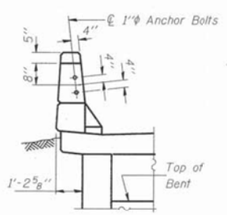

VIEW E-E

Reinforcement bars designated (E) shall be epoxy coated.
Bars indicated thus 20 x 3- #5 etc. indicates 20 lines of bars with 3 lengths per line.
See sheet #14 for sections C-C, D-D & E-E.

APPROACH SLABS
WEST BOUND LANES
F.A.I. 80 OVER F.A.U. 6081 (LaSalle RD.)
SECTION (50-2) HB-2
STATION 613+50.85
LaSALLE COUNTY
STRUCTURE NUMBERS 050-0228 & 0229

FOR INFORMATION ONLY

MODEL: Default
FILE NAME: \\QuiggProjects\2018\L018 Various Structure IDOT D3 Farnsworth PTB 161-21\Work Order 14 - I-80 Roadway and other\CADD\CADD Sheets\Existing Bridge Plans 0228-0229-013.dgn

QUIGG ENGINEERING INC

USER NAME = mwilson	DESIGNED -	REVISED -	
	DRAWN -	REVISED -	
PLOT SCALE = 2.0000 ' / in.	CHECKED -	REVISED -	
PLOT DATE = 10/2/2019	DATE - 10/4/2019	REVISED -	

STATE OF ILLINOIS
DEPARTMENT OF TRANSPORTATION

EXISTING STRUCTURAL PLANS
STRUCTURE NO. 050-0228/0229

SCALE: | SHEET 13 OF 30 SHEETS | STA. | TO STA.

F.A.I RTE.	SECTION	COUNTY	TOTAL SHEETS	SHEET NO.
80	50-2(HB-2)BDR(HB-1)BR(BR)BR-1	LASALLE	328	218
		CONTRACT NO. 66H21		
	ILLINOIS	FED. AID PROJECT		

ROUTE NO.	SECTION	COUNTY	TOTAL SHEETS	SHEET NO.
F.A.I. 80	*	LaSALLE	196	52
FED. ROAD DIST. NO. 7		ILLINOIS	PROJECT-	

SHEET 14 OF 31

*(50-2)HBR-1, HB-2, BR

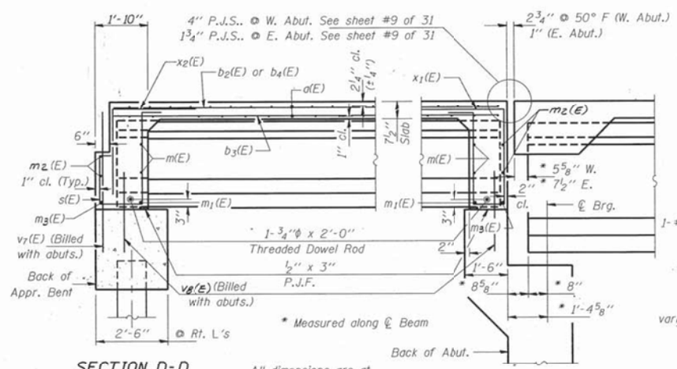

SECTION D-D

SECTION C-C
(W. Appr. shown)

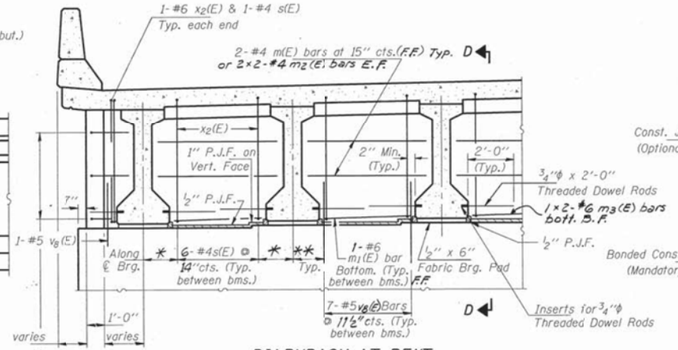

DIAPHRAGM AT BENT

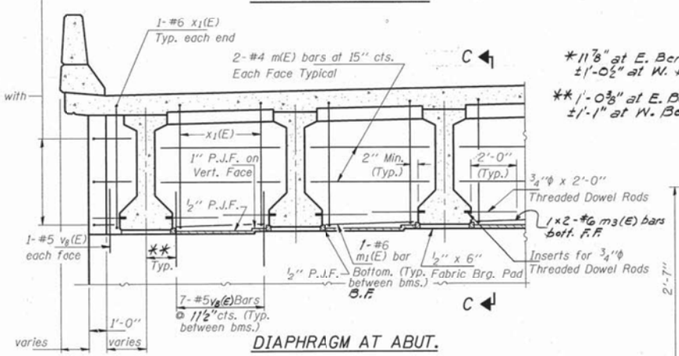

DIAPHRAGM AT ABUT.

*11⅞" at E. Bent
±1'-0½" at W. Bent

**1'-0⅜" at E. Bent/Abut.
±1'-1" at W. Bent/Abut.

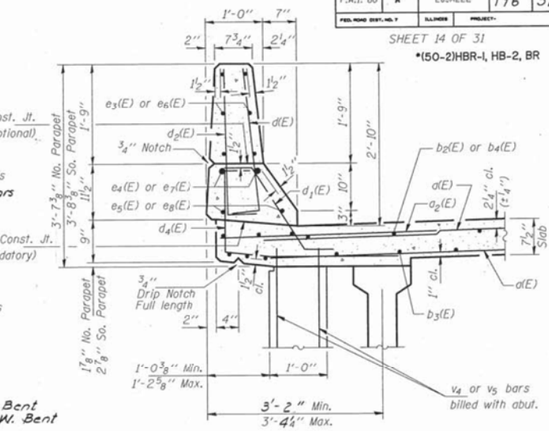

SECTION THRU PARAPET

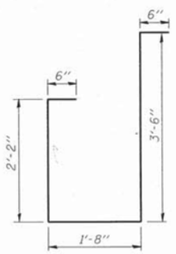

BAR s(E)

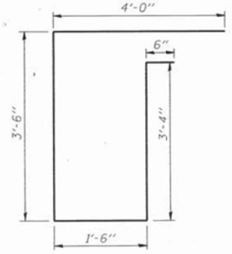

BAR x1(E)

h3(E), h4(E), bars, billed with abut. (Cut to fit)

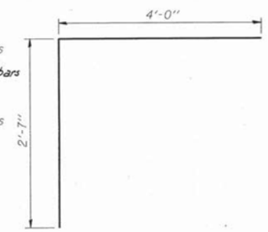

BAR x2(E)

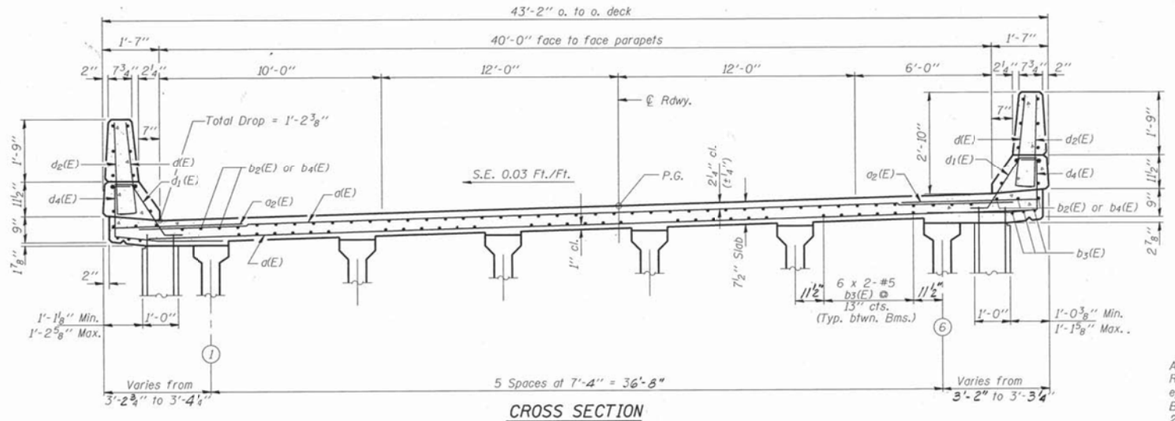

CROSS SECTION
(Looking East)

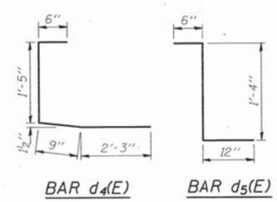

BAR d4(E)

BAR d5(E)

TWO APPROACH SLABS BILL OF MATERIAL

Bar	No.	Size	Length	Shape
a(E)	276	#5	41'-2"	
a2(E)	162	#6	4'-0"	
b2(E)	46	#5	43'-3"	
b3(E)	144	#5	22'-10"	
b4(E)	46	#5	42'-0"	
d(E)	190	#5	3'-0"	
d1(E)	178	#5	2'-7"	
d2(E)	174	#4	3'-0"	
d4(E)	174	#4	4'-11"	
d5(E)	12	#5	2'-10"	
e3(E)	36	#4	14'-2"	
e4(E)	4	#8	43'-3"	
e5(E)	4	#5	43'-3"	
e6(E)	36	#4	13'-9"	
e7(E)	4	#8	42'-0"	
e8(E)	4	#5	42'-0"	
m(E)	40	#4	7'-0"	
m1(E)	20	#6	6'-0"	
m2(E)	16	#4	21'-11"	
m3(E)	8	#6	22'-4"	
s(E)	64	#4	8'-4"	
x1(E)	84	#6	12'-10"	
x2(E)	84	#6	6'-7"	
Reinforcement Bars, Epoxy Coated			Lbs.	27990
Concrete Superstructure			Cu. Yd.	131.8

MIN BAR LAPS

#5 bar = 2'-2"
#6 bar = 2'-7"
#4 bar = 1'-8"

All transverse dimensions are radial, except beam spacing.
Reinforcement bars designated (E) shall be epoxy coated.
Bars indicated thus 20 x 3-#5 etc. indicates 20 lines of bars with 3 lengths per line.
For d(E), d1(E) & d2(E) Bar Details, see sheet #8 of 31.

APPROACH SLAB DETAILS
WEST BOUND LANES

F.A.I. 80 OVER F.A.U. 6081 (LaSalle RD.)
SECTION (50-2) HB-2
STATION 613+50.85
LaSALLE COUNTY
STRUCTURE NUMBERS 050-0228 & 0229

FOR INFORMATION ONLY

MODEL: Default
FILE NAME: \\QuiggProjects\2018\18L018 Various Structure IDOT D3 Farnsworth PTB 161-2\Work Order 14 - I-80 Roadway and other\CADD\CADD Sheets\Existing Bridge Plans\0366H21-Int-Existing Bridge Plans 0228-0229-014.dgn

QUIGG ENGINEERING INC

USER NAME = mwilson	DESIGNED -	REVISED -	
	DRAWN -	REVISED -	
PLOT SCALE = 2.0000 ' / in.	CHECKED -	REVISED -	
PLOT DATE = 10/2/2019	DATE - 10/4/2019	REVISED -	

STATE OF ILLINOIS
DEPARTMENT OF TRANSPORTATION

EXISTING STRUCTURAL PLANS
STRUCTURE NO. 050-0228/0229

SCALE: | SHEET 14 OF 30 SHEETS | STA. | TO STA.

F.A.I RTE.	SECTION	COUNTY	TOTAL SHEETS	SHEET NO.
80	50-2(HB-2)BDR(HB-1)BR(BR)BR-1	LASALLE	328	219
		CONTRACT NO. 66H21		
		ILLINOIS	FED. AID PROJECT	

ROUTE NO.	SECTION	COUNTY	TOTAL SHEETS	SHEET NO.
F.A.I. 80	*	LaSALLE	196	53
FED. ROAD DIST. NO. 7	ILLINOIS	PROJECT-		

SHEET 15 OF 31

*(50-2)HBR-I, HB-2, BR

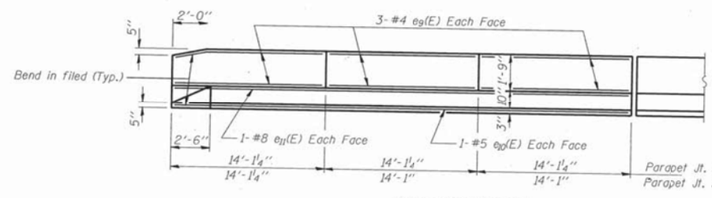

WEST PARAPET

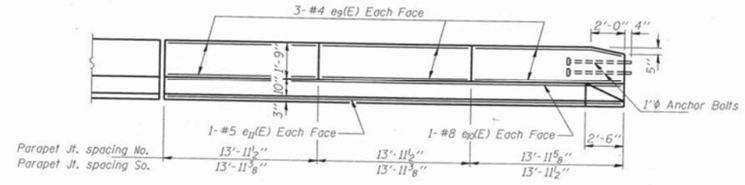

EAST PARAPET

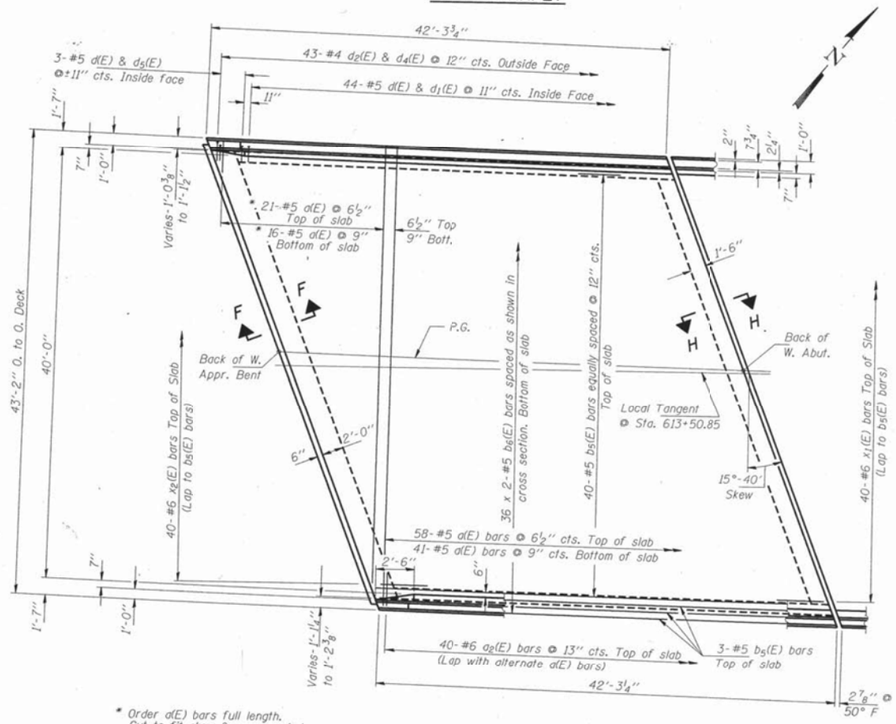

WEST APPROACH

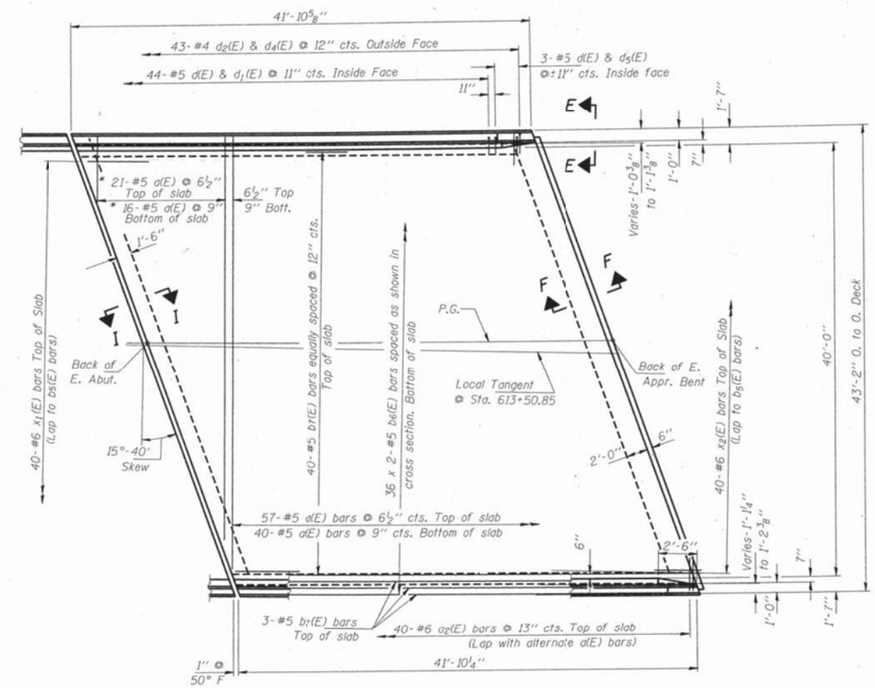

EAST APPROACH

* Order d(E) bars full length. Cut to fit skew & use remainder of bars in the opposite end.

Place d(E) & a2(E) bars radially. Spacing to be measured along P.G.

All transverse dimensions are radial. All longitudinal dimensions are measured along outside face of parapet.

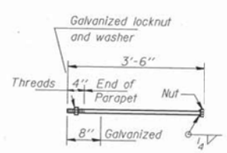

1"ϕ ANCHOR BOLT
(Cost Incidental)

MIN BAR LAPS
#5 bar = 2'-2"

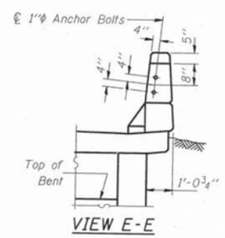

VIEW E-E

Reinforcement bars designated (E) shall be epoxy coated.
Bars indicated thus 20 x 3-#5 etc. indicates 20 lines of bars with 3 lengths per line.
See sheet #16 for Sections F-F, H-H & I-I.

APPROACH SLABS
EAST BOUND LANES
F.A.I. 80 OVER F.A.U. 6081 (LaSalle RD.)
SECTION (50-2)HB-2
STATION 613+50.85
LaSALLE COUNTY
STRUCTURE NUMBERS 050-0228 & 0229

FOR INFORMATION ONLY

MODEL: Default
FILE NAME: \\QuiggProjects2018\18\018 Various Structure IDOT D3 Farnsworth PTB 161-21\Work Order 14 - I-80 Roadway and other\CADD Sheets\Existing Bridge Plans\0366H21-Int-Existing Bridge Plans 0228-0229-015.dgn

QUIGG ENGINEERING INC

USER NAME = mwilson	DESIGNED -	REVISED -	
	DRAWN -	REVISED -	
PLOT SCALE = 2.0000 ' / in.	CHECKED -	REVISED -	
PLOT DATE = 10/2/2019	DATE - 10/4/2019	REVISED -	

STATE OF ILLINOIS
DEPARTMENT OF TRANSPORTATION

EXISTING STRUCTURAL PLANS
STRUCTURE NO. 050-0228/0229

SCALE: SHEET 15 OF 30 SHEETS STA. TO STA.

F.A.I RTE.	SECTION	COUNTY	TOTAL SHEETS	SHEET NO.
80	50-2(HB-2)BDR(HB-1)BR(BR)BR-1	LASALLE	328	220
		CONTRACT NO. 66H21		
	ILLINOIS	FED. AID PROJECT		

ROUTE NO.	SECTION	COUNTY	TOTAL SHEETS	SHEET NO.
F.A.I. 80	*	LaSALLE	196	54
FED. ROAD DIST. NO. 7	ILLINOIS	PROJECT-		

SHEET 16 OF 31
*(50-2)HBR-I, HB-2, BR

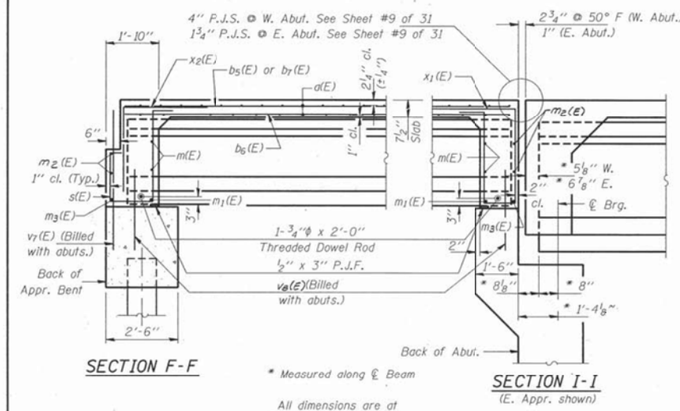

SECTION F-F

* Measured along ℄ Beam

All dimensions are at Rt. L's except as noted.

SECTION I-I
(E. Appr. shown)

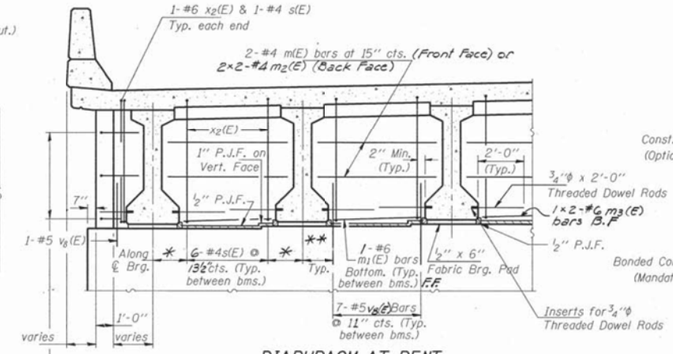

DIAPHRAGM AT BENT

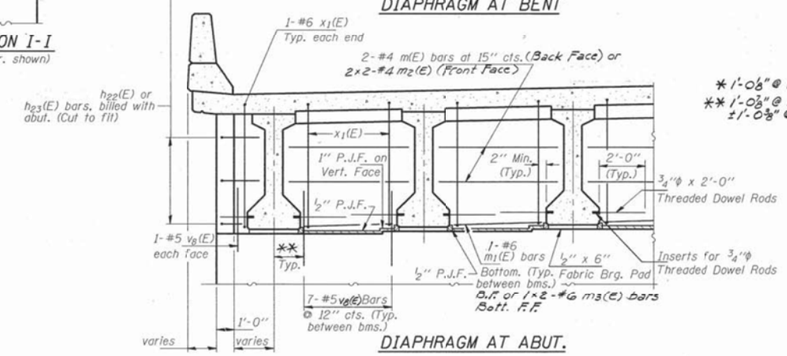

DIAPHRAGM AT ABUT.

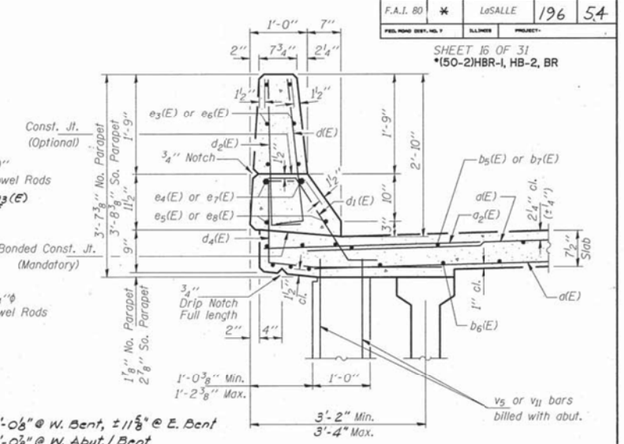

* 1'-0⅛" @ W. Bent, ±11⅝" @ E. Bent
** 1'-0⅛" @ W. Abut./Bent
±1'-0⅜" @ E. Abut./Bent

SECTION THRU PARAPET

TWO APPROACH SLABS BILL OF MATERIAL

Bar	No.	Size	Length	Shape
d(E)	270	#5	41'-2"	
d2(E)	160	#6	4'-0"	
b5(E)	46	#5	42'-2"	
b6(E)	144	#5	22'-4"	
b7(E)	46	#5	41'-4"	
d(E)	190	#5	3'-0"	
d1(E)	178	#5	2'-7"	
d2(E)	174	#4	3'-0"	
d4(E)	174	#4	4'-11"	
d5(E)	12	#5	2'-10"	
e9(E)	72	#4	13'-9"	
e10(E)	8	#8	41'-10"	
e11(E)	8	#5	41'-10"	
m(E)	40	#4	7'-0"	
m1(E)	20	#6	6'-0"	
m2(E)	16	#4	21'-8"	
m3(E)	8	#6	21'-5"	
s(E)	64	#4	8'-4"	
x1(E)	84	#6	12'-10"	
x2(E)	84	#6	6'-7"	
Reinforcement Bars, Epoxy Coated			Lbs.	27510
Concrete Superstructure			Cu. Yd.	130.8

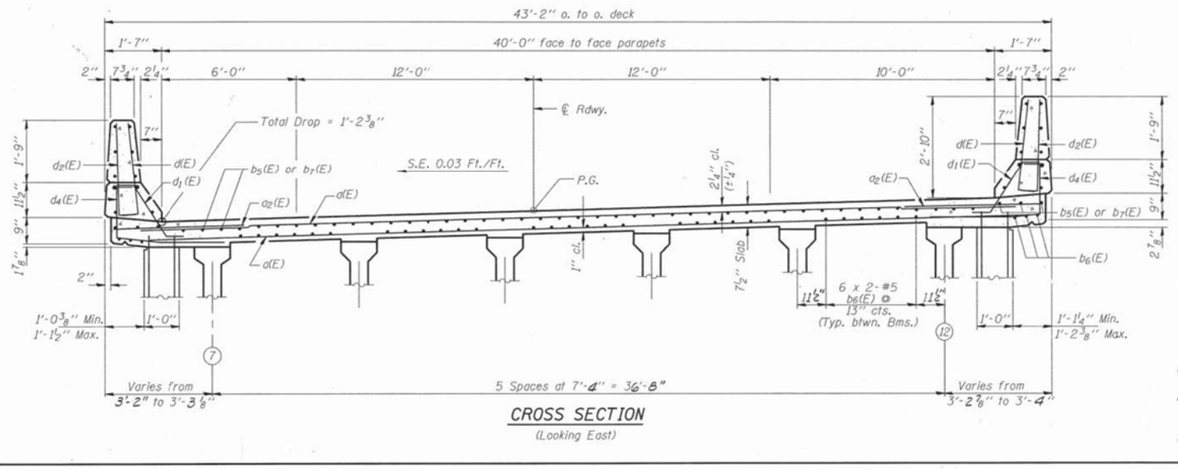

CROSS SECTION
(Looking East)

MIN BAR LAPS

#5 bar = 2'-2"
#6 bar = 2'-7"
#4 bar = 1'-8"

All transverse dimensions are radial, except beam spacing.
Reinforcement bars designated (E) shall be epoxy coated.
Bars indicated thus 20 x 3-#5 etc. indicates 20 lines of bars with 3 lengths per line.
For d(E), d1(E) & d2(E) Bar Details, See Sheet #8 of 31.
For d4(E), d5(E), s(E), x1(E) & x2(E) Bar Details, see sheet #14 of 31.

APPROACH SLAB DETAILS
EAST BOUND LANES

F.A.I. 80 OVER F.A.U. 6081 (LaSalle RD.)
SECTION (50-2) HB-2
STATION 613+50.85
LaSALLE COUNTY
STRUCTURE NUMBERS 050-0228 & 0229

FOR INFORMATION ONLY

MODEL: Default
FILE NAME: \\Quigg\Projects\2018\18IL018 Various Structure IDOT D3 Farnsworth PTB 161-21\Work Order 14 - I-80 Roadway and other\CADD\CADD Sheets\Existing Bridge Plans\0366H21-Int-Existing Bridge Plans 0228-0229-0.16.dgn

QUIGG ENGINEERING INC

USER NAME = mwilson	DESIGNED -	REVISED -	
	DRAWN -	REVISED -	
PLOT SCALE = 2.0000 ' / in.	CHECKED -	REVISED -	
PLOT DATE = 10/2/2019	DATE - 10/4/2019	REVISED -	

STATE OF ILLINOIS
DEPARTMENT OF TRANSPORTATION

EXISTING STRUCTURAL PLANS
STRUCTURE NO. 050-0228/0229

SCALE: | SHEET 16 OF 30 SHEETS | STA. | TO STA.

F.A.I RTE.	SECTION	COUNTY	TOTAL SHEETS	SHEET NO.
80	50-2(HB-2)BDR(HB-1)BR(BR)BR-1	LASALLE	328	221

CONTRACT NO. 66H21
ILLINOIS | FED. AID PROJECT

ROUTE NO.	SECTION	COUNTY	TOTAL SHEETS	SHEET NO.
F.A.I. 80	*	LaSALLE	196	55
FED. ROAD DIST. NO. 7	ILLINOIS	PROJECT-		

SHEET 17 OF 31

*(50-2)HBR-1, HB-2, BR

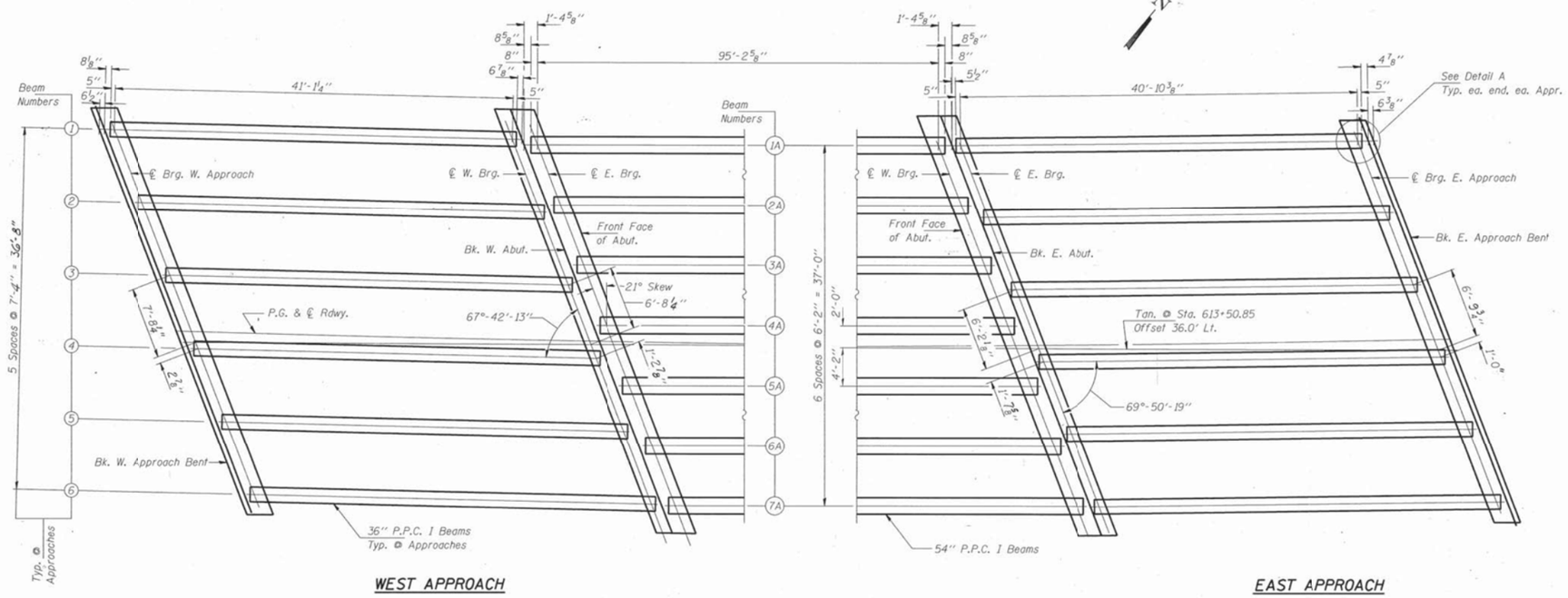

WEST APPROACH

EAST APPROACH

FRAMING PLAN

All horizontal dimensions are measured along beams.

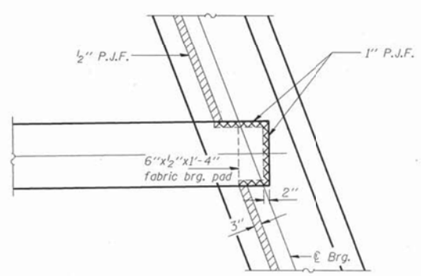

DETAIL A

FRAMING PLAN
WEST BOUND LANES
F.A.I. 80 OVER F.A.U. 6081 (LaSalle RD.)
SECTION (50-2) HB-2
STATION 613+50.85
LaSALLE COUNTY
STRUCTURE NUMBERS 050-0228 & 0229

FOR INFORMATION ONLY

MODEL: Default
FILE NAME: \\QuiggProjects2018\18\018 Various Structure IDOT D3 Farnsworth PTB 161-21\Work Order 14 - I-80 Roadway and other\CADD\CADD Sheets\Existing Bridge Plans 0228-0229-017.dgn

QUIGG ENGINEERING INC

USER NAME = mwilson	DESIGNED -	REVISED -	
	DRAWN -	REVISED -	
PLOT SCALE = 2.0000 ' / in.	CHECKED -	REVISED -	
PLOT DATE = 10/2/2019	DATE - 10/4/2019	REVISED -	

STATE OF ILLINOIS
DEPARTMENT OF TRANSPORTATION

EXISTING STRUCTURAL PLANS
STRUCTURE NO. 050-0228/0229

SCALE: | SHEET 17 OF 30 SHEETS | STA. | TO STA.

F.A.I RTE.	SECTION	COUNTY	TOTAL SHEETS	SHEET NO.
80	50-2(HB-2)BDR(HB-1)BR(BR)BR-1	LASALLE	328	222
		CONTRACT NO. 66H21		
	ILLINOIS	FED. AID PROJECT		

ROUTE NO.	SECTION	COUNTY	TOTAL SHEETS	SHEET NO.
F.A.I. 80	*	LaSALLE	196	56
FED. ROAD DIST. NO. 7	ILLINOIS	PROJECT-		

SHEET 18 OF 31
*(50-2)HBR-1, HB-2, BR

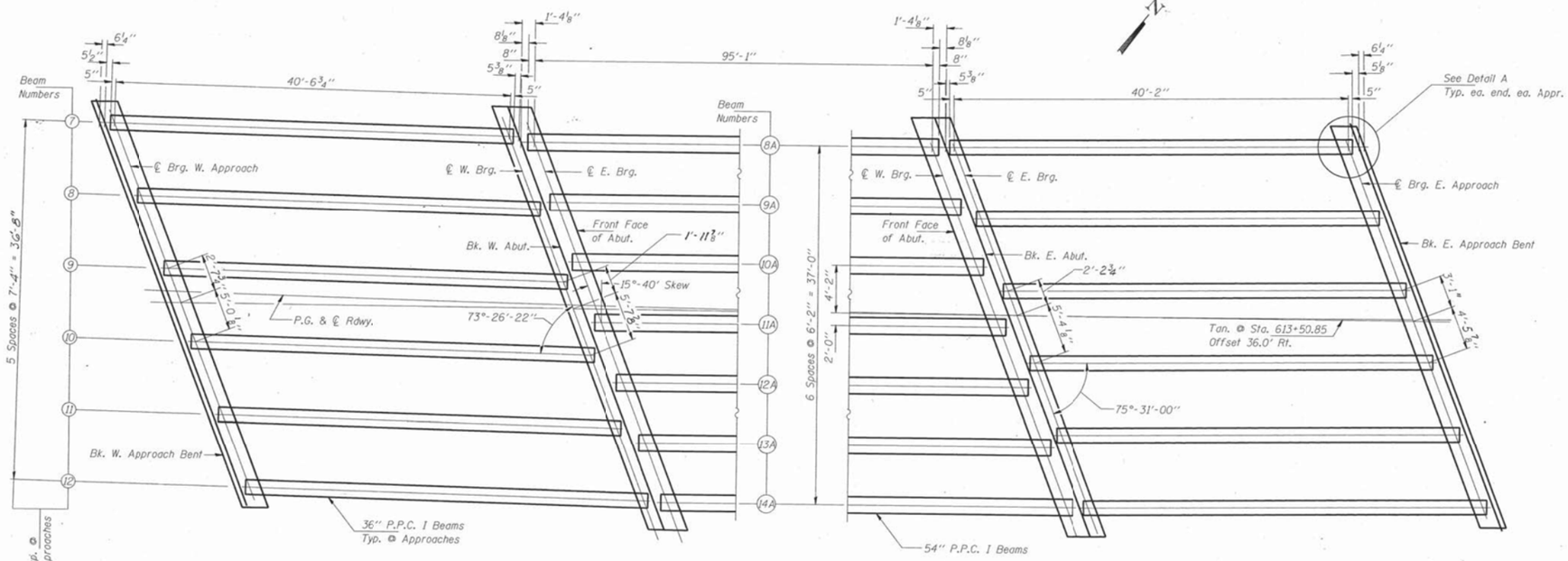

FRAMING PLAN
EAST BOUND LANES
F.A.I. 80 OVER F.A.U. 6081 (LaSalle RD.)
SECTION (50-2)HB-2
STATION 613+50.85
LaSALLE COUNTY
STRUCTURE NUMBERS 050-0228 & 0229

FOR INFORMATION ONLY

MODEL: Default
FILE NAME: \\QuiggProjects\2018\18L018 Various Structure IDOT D3 Farnsworth PTB 161-21\Work Order 14 - I-80 Roadway and other\CADD\CADD Sheets\Existing Bridge Plans 0228-0229-018.dgn

QUIGG ENGINEERING INC

USER NAME = mwilson	DESIGNED -	REVISED -	
	DRAWN -	REVISED -	
PLOT SCALE = 2.0000 ' / in.	CHECKED -	REVISED -	
PLOT DATE = 10/2/2019	DATE - 10/4/2019	REVISED -	

STATE OF ILLINOIS
DEPARTMENT OF TRANSPORTATION

EXISTING STRUCTURAL PLANS
STRUCTURE NO. 050-0228/0229

SCALE: | SHEET 18 OF 30 SHEETS | STA. | TO STA.

F.A.I RTE.	SECTION	COUNTY	TOTAL SHEETS	SHEET NO.
80	50-2(HB-2)BDR(HB-1)BR(BR)BR-1	LASALLE	328	223
		CONTRACT NO. 66H21		
		ILLINOIS	FED. AID PROJECT	

ROUTE NO.	SECTION	COUNTY	TOTAL SHEETS	SHEET NO.
F.A.I. 80	*	LaSALLE	196	57
FED. ROAD DIST. NO. 7	ILLINOIS	PROJECT-		

SHEET 19 OF 31
*(50-2)HBR-I, HB-2, BR

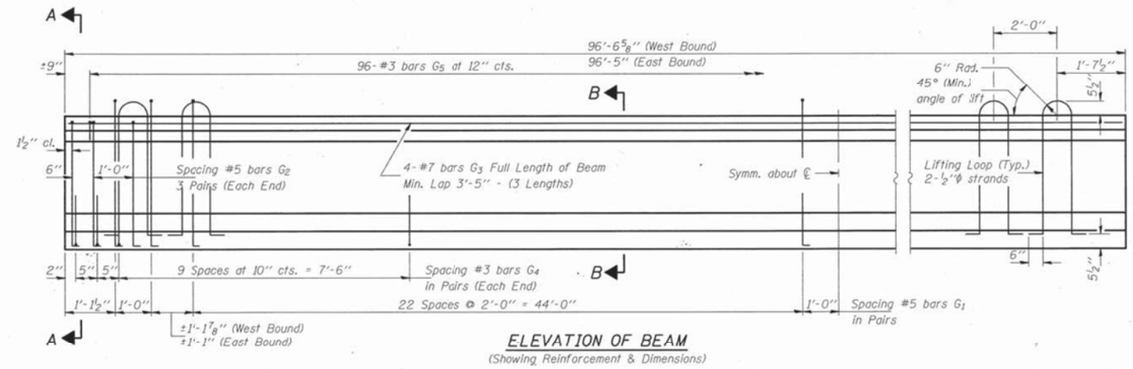

ELEVATION OF BEAM
(Showing Reinforcement & Dimensions)

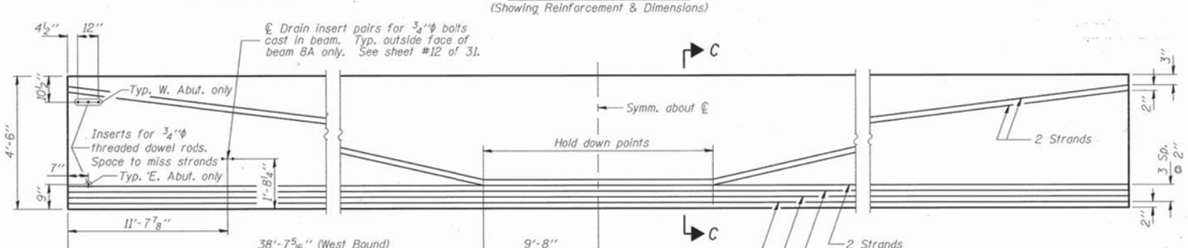

ELEVATION OF BEAM
(Showing Prestressing Steel)

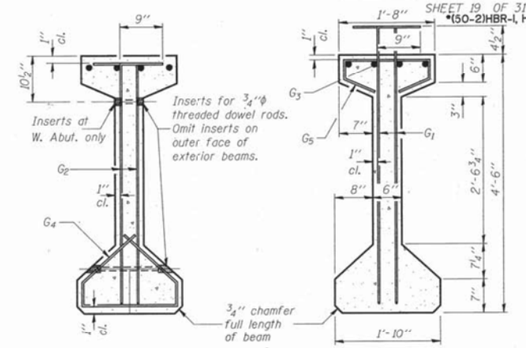

SECTION A-A

SECTION B-B

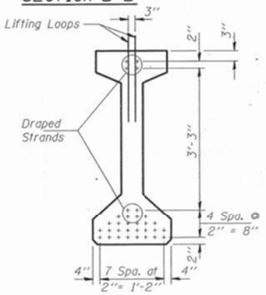

SECTION C-C

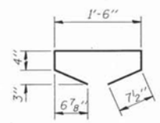

BAR G5

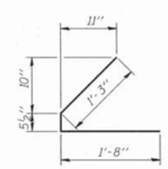

BAR G4

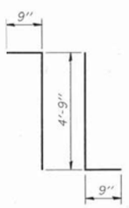

BAR G1

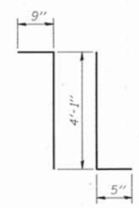

BAR G2

* BAR LIST

Bar	No.	Size	Length	Shape
G_1	100	#5	6'-3"	7L
G_2	12	#6	5'-3"	7L
G_3	12	#7	34'-5"	—
G_4	48	#3	3'-4 1/2"	L
G_5	96	#3	3'-5"	▭

* For one beam only.

BILL OF MATERIAL

Item	Unit	Total
Furnishing and Erecting Precast Prestressed Concrete I-Beams, 54"	Foot	1351

NOTES

All inserts and threaded dowel rods for inserts, reinforcing and Prestressing Steel, and other items which are cast into the Precast Concrete I-Beams shall be included in the contract unit price per lineal foot of "Furnishing and Erecting Precast Prestressed Concrete I-Beams, 54 in."

Insert for 3/4"φ threaded dowel rods are to be two strut, coil type for interior I-Beams and single coil, flared loop type for exterior I-Beams.

Prestressing steel shall be uncoated high strength, low relaxation 7 wire strand, Grade 270.

The nominal diameter shall be 1/2" and the nominal cross-sectional area shall be 0.153 sq. in.

Non-prestressing steel shall conform to AASHTO designation M-31, M-42 or M-53 Grade 60.

Lifting loops shall be 2-1/2"φ-270 ksi strands, as shown.

Required release strength, f'ci, shall be 5,000 psi.

P.P.C. I-BEAMS (54")

F.A.I. 80 OVER F.A.U. 6081 (LaSalle RD.)
SECTION (50-2)HB-2
STATION 613+50.85
LaSALLE COUNTY
STRUCTURE NUMBERS 050-0228 & 0229

FOR INFORMATION ONLY

MODEL: Default
FILE NAME: \\Quigg\Projects\2018\18L018 Various Structure IDOT D3 Farnsworth PTB 161-21\Work Order 14 - I-80 Roadway and other\CADD\CADD Sheets\Existing Bridge Plans\0366H21-Int-Existing Bridge Plans 0228-0229-019.dgn

QUIGG ENGINEERING INC

USER NAME = mwilson	DESIGNED -	REVISED -	
	DRAWN -	REVISED -	
PLOT SCALE = 2.0000 ' / in.	CHECKED -	REVISED -	
PLOT DATE = 10/2/2019	DATE - 10/4/2019	REVISED -	

STATE OF ILLINOIS
DEPARTMENT OF TRANSPORTATION

EXISTING STRUCTURAL PLANS
STRUCTURE NO. 050-0228/0229

SCALE: | SHEET 19 OF 30 SHEETS | STA. | TO STA.

F.A.I RTE.	SECTION	COUNTY	TOTAL SHEETS	SHEET NO.
80	50-2(HB-2)BDR(HB-1)BR(BR)BR-1	LASALLE	328	224
		CONTRACT NO. 66H21		
		ILLINOIS	FED. AID PROJECT	

ROUTE NO.	SECTION	COUNTY	TOTAL SHEETS	SHEET NO.
F.A.I. 80	*	LaSALLE	196	58
FED. ROAD DIST. NO. 7	ILLINOIS	PROJECT-		

SHEET 20 OF 31
*(50-2)HBR-1, HB-2, BR

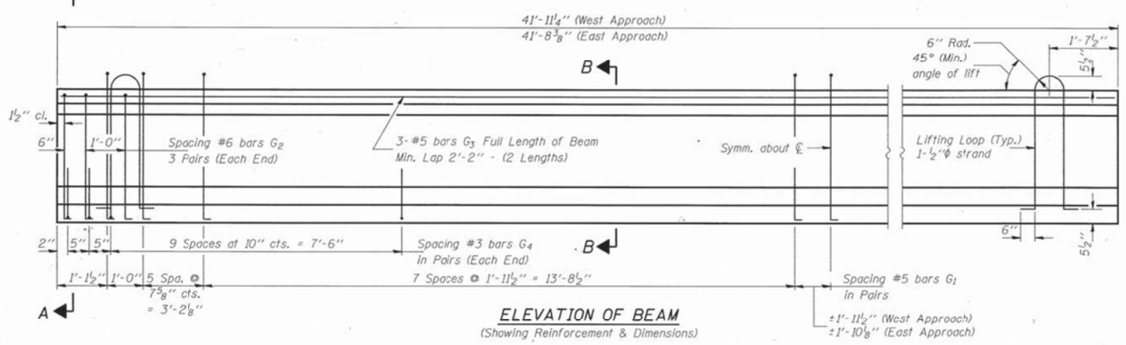

ELEVATION OF BEAM
(Showing Reinforcement & Dimensions)

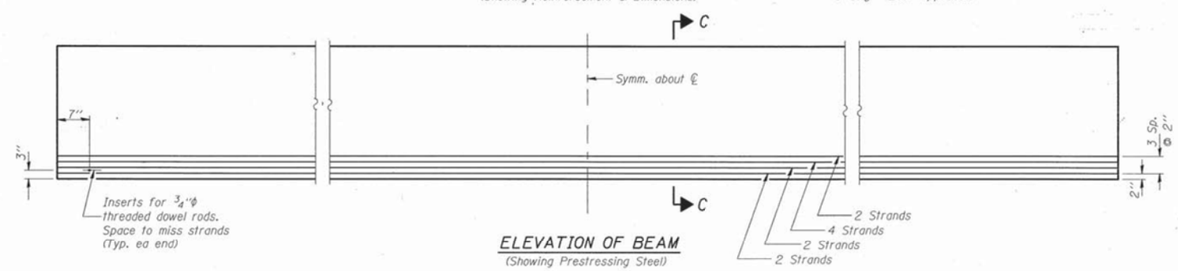

ELEVATION OF BEAM
(Showing Prestressing Steel)

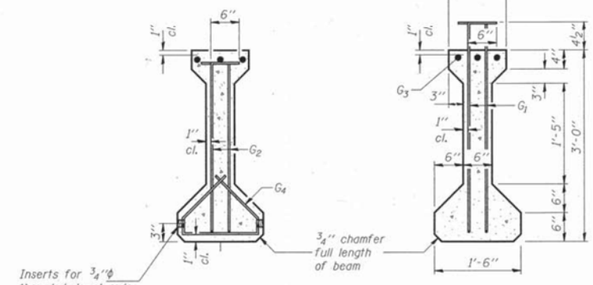

SECTION A-A

SECTION B-B

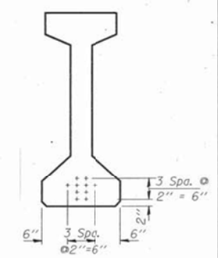

SECTION C-C

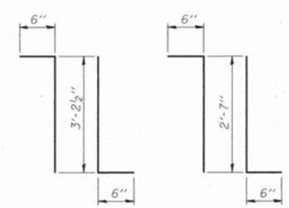

BAR G1

BAR G2

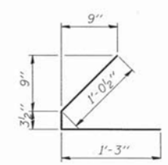

BAR G4

* BAR LIST

Bar	No.	Size	Length	Shape
G1	58	#5	4'-2½"	⅂L
G2	12	#6	3'-7"	⅂L
G3	6	#5	22'-0"	—
G4	48	#3	2'-7"	⊂

* For one beam only.

NOTES

All inserts and threaded dowel rods for inserts, reinforcing and Prestressing Steel, and other items which are cast into the Precast Concrete I-Beams shall be included in the contract unit price per foot of "Furnishing and Erecting Precast Prestressed Concrete I-Beams, 36 in."

Insert for ¾"ϕ threaded dowel rods are to be two strut, coil type for interior I-Beams and single coil, flared loop type for exterior I-Beams.

Prestressing steel shall be uncoated high strength, low relaxation 7 wire strand, Grade 270.

The nominal diameter shall be ½" and the nominal cross-sectional area shall be 0.153 sq. in.

Non-prestressing steel shall conform to AASHTO designation M-31, M-42 or M-53 Grade 60.

Lifting loops shall be 1-½"ϕ-270 ksi strand, as shown.

Required release strength, f'ci, shall be 5,000 psi.

BILL OF MATERIAL

Item	Unit	Total
Furnishing and Erecting Precast Prestressed Concrete I-Beams, 36"	Foot	502

P.P.C. I-BEAMS (36")
WEST BOUND LANES
F.A.I. 80 OVER F.A.U. 6081 (LaSalle RD.)
SECTION (50-2) HB-2
STATION 613+50.85
LaSALLE COUNTY
STRUCTURE NUMBERS 050-0228 & 0229

FOR INFORMATION ONLY

MODEL: Default
FILE NAME: \\QuiggProjects\2018\18L018 Various Structure IDOT D3 Farnsworth PTB 161-211Work Order 14 - I-80 Roadway and other\CADD\CADD Sheets\Existing Bridge Plans 0228-0229-020.dgn

QUIGG ENGINEERING INC

USER NAME = mwilson	DESIGNED -	REVISED -	
	DRAWN -	REVISED -	
PLOT SCALE = 2.0000 ' / in.	CHECKED -	REVISED -	
PLOT DATE = 10/2/2019	DATE - 10/4/2019	REVISED -	

STATE OF ILLINOIS
DEPARTMENT OF TRANSPORTATION

EXISTING STRUCTURAL PLANS
STRUCTURE NO. 050-0228/0229

SCALE: | SHEET 20 OF 30 SHEETS | STA. | TO STA.

F.A.I RTE.	SECTION	COUNTY	TOTAL SHEETS	SHEET NO.
80	50-2(HB-2)BDR(HB-1)BR(BR)BR-1	LASALLE	328	225
		CONTRACT NO. 66H21		
	ILLINOIS	FED. AID PROJECT		

ROUTE NO.	SECTION	COUNTY	TOTAL SHEETS	SHEET NO.
F.A.I. 80	*	LaSALLE	196	59
FED. ROAD DIST. NO. 7	ILLINOIS	PROJECT-		

SHEET 21 OF 31
*(50-2)HBR-I, HB-2, BR

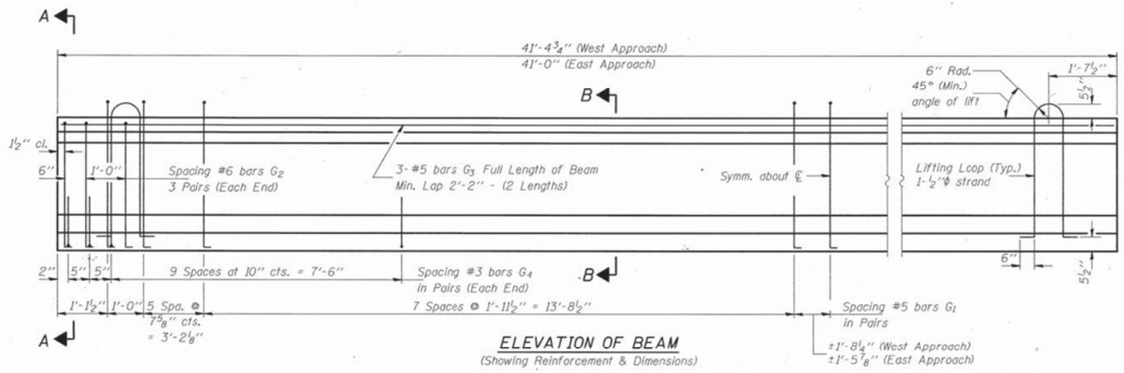

ELEVATION OF BEAM
(Showing Reinforcement & Dimensions)

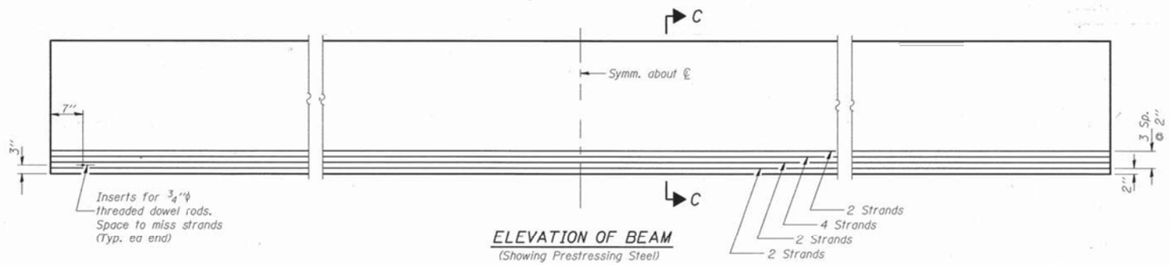

ELEVATION OF BEAM
(Showing Prestressing Steel)

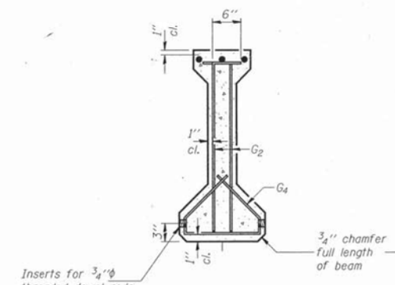

SECTION A-A

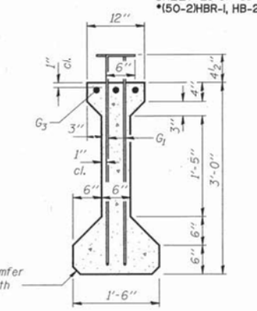

SECTION B-B

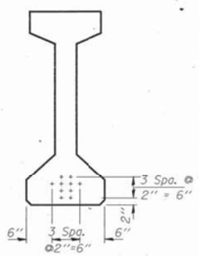

SECTION C-C

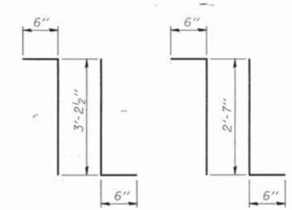

BAR G1 BAR G2

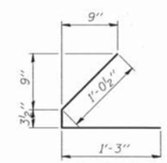

BAR G4

* BAR LIST

Bar	No.	Size	Length	Shape
G1	58	#5	4'-2½"	⅂L
G2	12	#6	3'-7"	⅂L
G3	6	#5	21'-9"	—
G4	48	#3	2'-7"	⊂

* For one beam only.

BILL OF MATERIAL

Item	Unit	Total
Furnishing and Erecting Precast Prestressed Concrete I-Beams, 36"	Foot	495

NOTES

All inserts and threaded dowel rods for inserts, reinforcing and Prestressing Steel, and other items which are cast into the Precast Concrete I-Beams shall be included in the contract unit price per foot of "Furnishing and Erecting Precast Prestressed Concrete I-Beams, 36 in."

Insert for ¾"φ threaded dowel rods are to be two strut, coil type for interior I-Beams and single coil, flared loop type for exterior I-Beams.

Prestressing steel shall be uncoated high strength, low relaxation 7 wire strand, Grade 270.

The nominal diameter shall be ½" and the nominal cross-sectional area shall be 0.153 sq. in.

Non-prestressing steel shall conform to AASHTO designation M-31, M-42 or M-53 Grade 60.

Lifting loops shall be 1-½"φ-270 ksi strand, as shown.

Required release strength, f'ci, shall be 5,000 psi.

P.P.C. I-BEAMS (36")
EAST BOUND LANES
F.A.I. 80 OVER F.A.U. 6081 (LaSalle RD.)
SECTION (50-2) HB-2
STATION 613+50.85
LaSALLE COUNTY
STRUCTURE NUMBERS 050-0228 & 0229

FOR INFORMATION ONLY

MODEL: Default
FILE NAME: \\QuigglProjects\2018\18\018 Various Structure IDOT D3 Farnsworth PTB 161-21\Work Order 14 - I-80 Roadway and other\CADD\CADD Sheets\Existing Bridge Plans\0366H21-sht-Existing Bridge Plans 0228-0229-021.dgn

QUIGG ENGINEERING INC	USER NAME = mwilson	DESIGNED -	REVISED -	STATE OF ILLINOIS DEPARTMENT OF TRANSPORTATION	EXISTING STRUCTURAL PLANS STRUCTURE NO. 050-0228/0229	F.A.I RTE.	SECTION	COUNTY	TOTAL SHEETS	SHEET NO.
		DRAWN -	REVISED -			80	50-2(HB-2)BDR(HB-1)BR(BR)BR-1	LASALLE	328	226
	PLOT SCALE = 2.0000 ' / in.	CHECKED -	REVISED -					CONTRACT NO. 66H21		
	PLOT DATE = 10/2/2019	DATE - 10/4/2019	REVISED -		SCALE: SHEET 21 OF 30 SHEETS STA. TO STA.		ILLINOIS	FED. AID PROJECT		

ROUTE NO.	SECTION	COUNTY	TOTAL SHEETS	SHEET NO.
F.A.I. 80	*	LaSALLE	196	60
FED. ROAD DIST. NO. 7	ILLINOIS	PROJECT-		

SHEET 22 OF 31
*(50-2)HBR-1, HB-2, BR

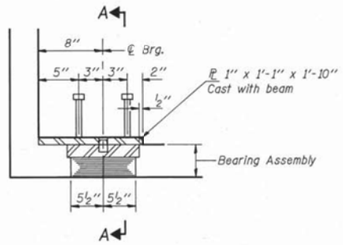

SECTION AT W. ABUT.

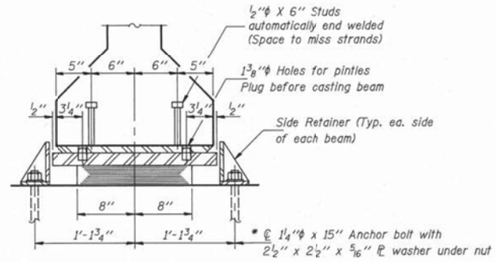

SECTION A-A

TYPE I ELASTOMERIC EXP. BRG.

* Notes: After beams have been erected holes at expansion bearings shall be drilled and anchor bolts grouted in place.

Anchor bolts at fixed bearings may be built into the masonry or drilled and grouted in place after all beams have been erected.

See sheet #23 of 31 for anchor bolt installation.

Weight of Lead Plates, Anchor Bolts, nuts and washers, pintles and side retainers is included in "Structural Steel".

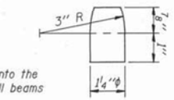

PINTLE

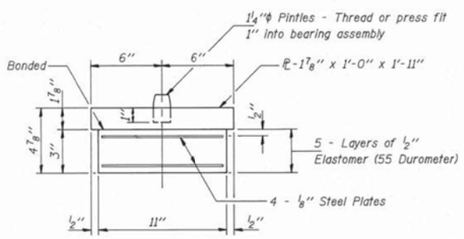

BEARING ASSEMBLY

Note: Shim plates shall not be placed under Bearing Assembly.

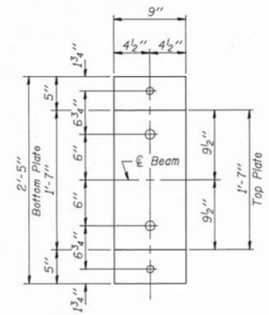

PLAN OF
TOP & BOTTOM PLATES

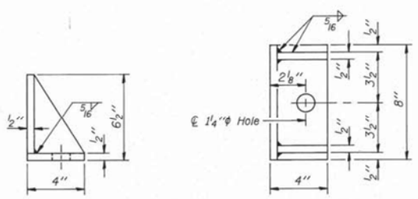

SIDE RETAINER

Equivalent rolled angle with stiffeners will be allowed in lieu of welded plates. Weight included with Structural Steel.

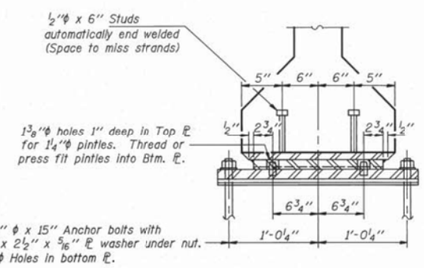

SECTION A-A

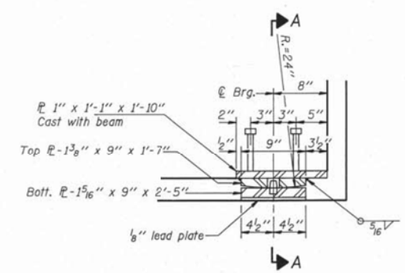

SECTION AT E. ABUT.

FIXED BEARING

BILL OF MATERIAL

Item	Unit	Total
Elastomeric Bearing Assembly, Type I	Each	14

BEARING DETAILS

F.A.I. 80 OVER F.A.U. 6081 (LaSalle RD.)
SECTION (50-2) HB-2
STATION 613+50.85
LaSALLE COUNTY
STRUCTURE NUMBERS 050-0228 & 0229

TENNEY PAVONI ASSOCIATES, INC.
CONSULTING ENGINEERS

DESIGNED D.A.B. CHECKED M.C.B.
DRAWN D.A.B. DATE 7-9-93 NO. 310

FOR INFORMATION ONLY

MODEL: Default
FILE NAME: \\QuiggProjects\2018\18L018 Various Structure IDOT D3 Farnsworth PTB 161-21\Work Order 14 - I-80 Roadway and other\CADD\CADD Sheets\Existing Bridge Plans\D366H21-sht-Existing Bridge Plans 0228-0229-022.dgn

QUIGG ENGINEERING INC

USER NAME = mwilson	DESIGNED -	REVISED -	
	DRAWN -	REVISED -	
PLOT SCALE = 2.0000 ' / in.	CHECKED -	REVISED -	
PLOT DATE = 10/2/2019	DATE - 10/4/2019	REVISED -	

STATE OF ILLINOIS
DEPARTMENT OF TRANSPORTATION

EXISTING STRUCTURAL PLANS
STRUCTURE NO. 050-0228/0229

SCALE: SHEET 22 OF 30 SHEETS STA. TO STA.

F.A.I RTE.	SECTION	COUNTY	TOTAL SHEETS	SHEET NO.
80	50-2(HB-2)BDR(HB-1)BR(BR)BR-1	LASALLE	328	227
		CONTRACT NO. 66H21		
		ILLINOIS	FED. AID PROJECT	

ROUTE NO.	SECTION	COUNTY	TOTAL SHEETS	SHEET NO.
F.A.I. 80	*	LaSALLE	196	61
PREL. ROAD SURF. NO. 7	B.L.NUMBER	PROJECT-		

SHEET 23 OF 31
*(50-2)HBR-1, HB-2, BR

D	E	H	K	"d"
1"	1 1/8"	13/16"	1 3/4"	1/4"
1 1/4"	1 3/8"	1 1/16"	2"	3/8"
1 1/2"	1 5/8"	1 5/16"	2 1/8"	1/2"
2"	2 1/8"	1 13/16"	2 7/8"	1/2"
2 1/2"	2 5/8"	2 5/16"	3 3/8"	1"

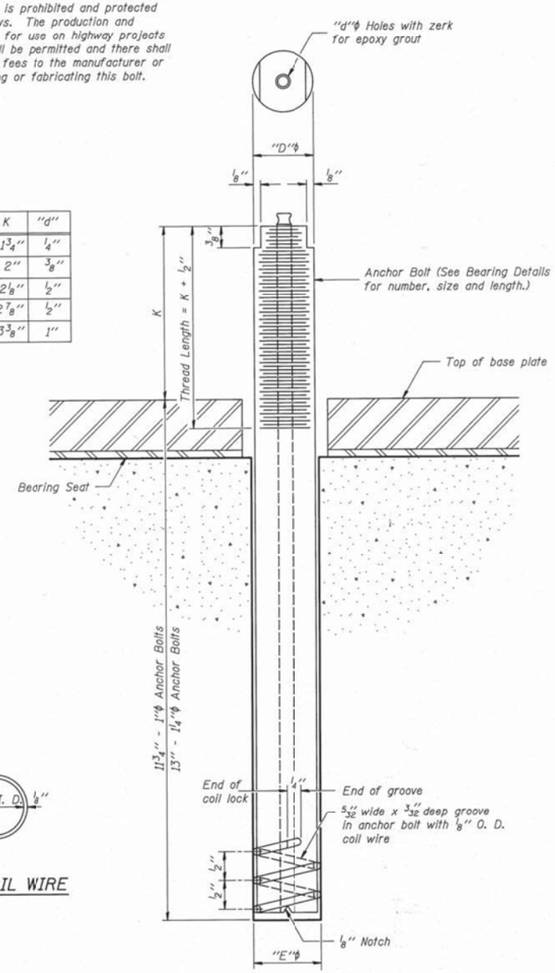

ILLINOIS COIL-LOCK ANCHOR BOLT

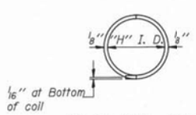

PLAN-COIL WIRE

MATERIALS FOR ILLINOIS COIL-LOCK ANCHOR BOLT

The anchor bolt shall be fabricated from cold drawn or hot finished seamless carbon steel mechanical tubing conforming to ASTM A519, Grade 1026 and supplied with hexagonal nuts and cut washers.

The coil wire shall be made of any suitable soft steel wire.

The finished anchor bolt shall be cleaned of rust and other foreign materials and wrapped or packaged to prevent contamination until they are installed.

The epoxy grout shall be a two-component, epoxy resin bonding system comforming to ASTM C881, Type I, Grade 1 and of a Class suitable for the temperature at installation.

INSTALLATION PROCEDURE for the ILLINOIS COIL-LOCK ANCHOR BOLT

1. With the coil wire in place,the bolt shall be inserted into the hole and turned clockwise to a snug fit in the hole. Nut and washer shall be placed on the bolt. The nut shall be tensioned until the steel base plates are held securely to the concrete bearing seat.
2. Epoxy grout shall be pumped through the zerk fitting with a pressure gun. Pumping shall continue until the epoxy overflows the hole around the bolt shank. After pumping is discontinued, excess epoxy shall be immediately wiped off.

ALTERNATE ANCHOR BOLTS

The Contractor may use, at his option, the capsule or the adhesive cartridge type anchor rods that have been previously tested and given a prior approval by the Department. The Contractor shall install these anchor rods in pre-drilled holes in accordance with the manufacturer's recommendations and procedures.

The capsule or the adhesive cartridge type anchor rods shall be a two part system composed of:

1. A threaded rod stud with nut and washer conforming to ASTM A307.
2. A sealed glass capsule or a sealed glass adhesive cartridge containing premeasured amounts of the adhesive chemical.

GENERAL NOTES

Holes in the masonry for anchor bolts shall be drilled through the base plates to the diameter and depth shown or in accordance with the manufacturer's recommendation after beams or girders have been erected and adjusted.

Prior to setting the bolts, the holes shall be dry and all dust and loose particles shall be removed by the use of compressed air or vacuuming.

The anchor bolts, furnished and installed and including the epoxy grout or capsules shall not be paid for separately but shall be included in the unit bid price for "Furnishing and Erecting Structural Steel".

ANCHOR BOLT DETAILS
FOR BEARINGS
F.A.I. 80 OVER F.A.U. 6081 (LaSalle RD.)
SECTION (50-2)HB-2
STATION 613+50.85
LaSALLE COUNTY
STRUCTURE NUMBERS 050-0228 & 0229

TENNEY PAVONI ASSOCIATES, INC.
CONSULTING ENGINEERS

DESIGNED D.A.B. CHECKED M.C.B.
DRAWN D.A.B. DATE 7-9-93 NO. 310

FOR INFORMATION ONLY

MODEL: Default
FILE NAME: \\QuiggProjects\2018\L018 Various Structure IDOT D3 Farnsworth PTB 161-21\Work Order 14 - I-80 Roadway and other\CADD\CADD Sheets\Existing Bridge Plans\D366H21-cnt-Existing Bridge Plans 0228-0229 023.dgn

QUIGG ENGINEERING INC

USER NAME = mwilson	DESIGNED -	REVISED -	
	DRAWN -	REVISED -	
PLOT SCALE = 2.0000 ' / in.	CHECKED -	REVISED -	
PLOT DATE = 10/2/2019	DATE - 10/4/2019	REVISED -	

STATE OF ILLINOIS
DEPARTMENT OF TRANSPORTATION

EXISTING STRUCTURAL PLANS
STRUCTURE NO. 050-0228/0229

SCALE: SHEET 23 OF 30 SHEETS STA. TO STA.

F.A.I RTE.	SECTION	COUNTY	TOTAL SHEETS	SHEET NO.
80	50-2(HB-2)BDR(HB-1)BR(BR)BR-1	LASALLE	328	228
		CONTRACT NO. 66H21		
	ILLINOIS	FED. AID PROJECT		

ROUTE NO.	SECTION	COUNTY	TOTAL SHEETS	SHEET NO.
F.A.I. 80	*	LaSALLE	196	62
FED. ROAD DIST. NO. 7	ILLINOIS	PROJECT-		

SHEET 24 of 31
*(50-2)HBR-I, HB-2, BR

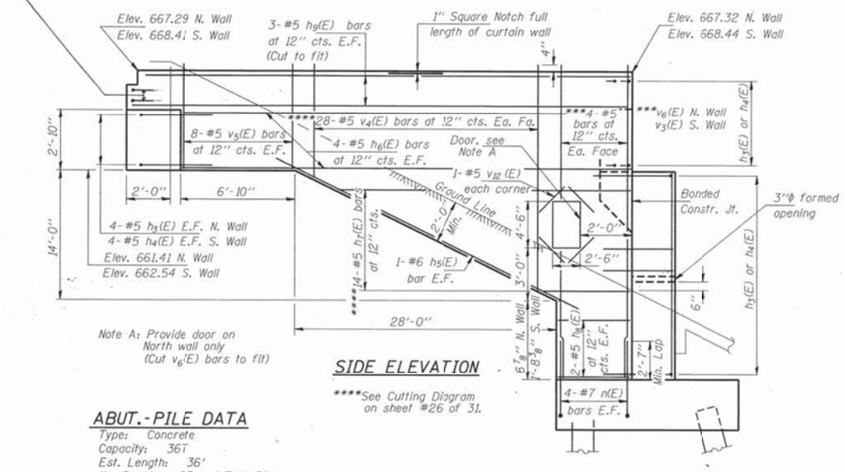

SIDE ELEVATION

ABUT.-PILE DATA

Type: Concrete
Capacity: 36T
Est. Length: 36'
No. Req'd.: 25 + 1 Test Pile

APPR. BENT-PILE DATA

Type: Concrete
Capacity: 33T
Est. Length: 45'
No. Req'd.: 9

* SEAT ELEVATIONS

BEAM	1A	2A	3A	4A	5A	6A	7A
E. Brg.	662.31	662.50	662.68	662.87	663.05	663.24	663.42
BEAM	1	2	3	4	5	6	
W. Brg.	664.28	664.51	664.73	664.96	665.18	665.40	
App. Brg.	664.25	664.47	664.70	664.92	665.15	665.37	

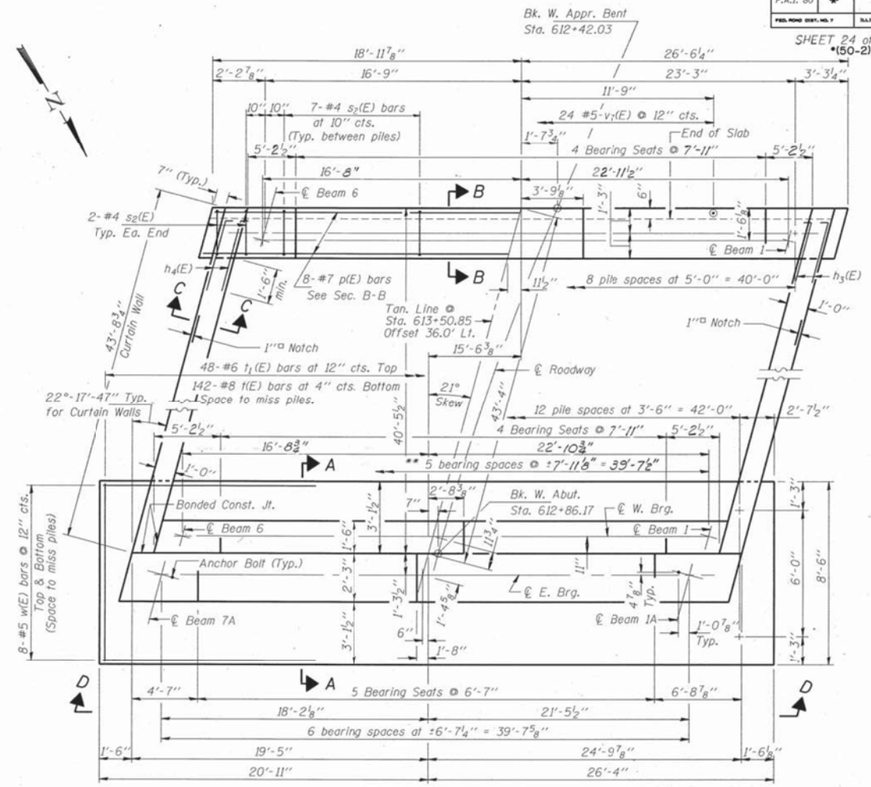

PLAN

** Typ. for approach beams.

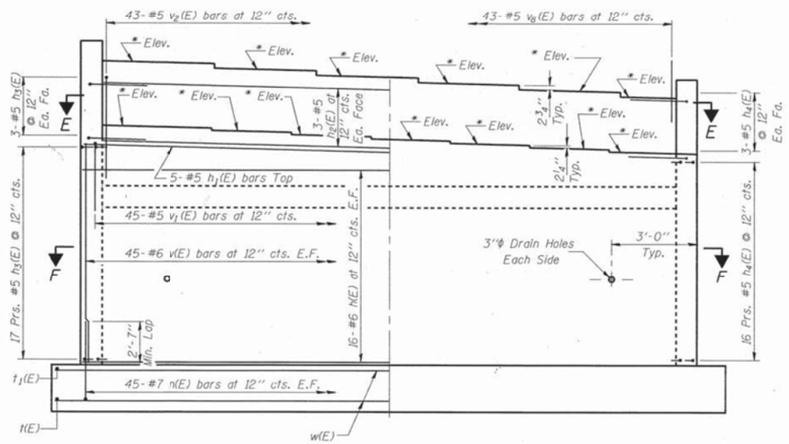

VIEW D-D

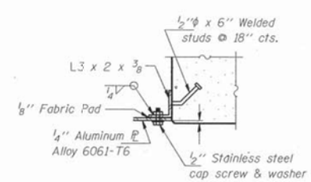

SECTION G-G

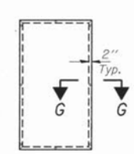

DOOR ELEVATION

(Cost of door & frame is incidental)

Notes: Space reinforcement in cap to miss anchor bolts.
Reinforcement bars designated (E) shall be epoxy coated.
See sheet #26 for Sections A-A, B-B, C-C, E-E and F-F.

WEST ABUTMENT W. BOUND LANES
F.A.I. 80 OVER F.A.U. 6081 (LaSalle RD.)
SECTION (50-2)HB-2
STATION 613+50.85
LaSALLE COUNTY
STRUCTURE NUMBERS 050-0228 & 0229

FOR INFORMATION ONLY

MODEL: Default
FILE NAME: \\QuiggProjects2018\18\018 Various Structure IDOT D3 Farnsworth PTB 161-21\Work Order 14 - I-80 Roadway and other\CADD\CADD Sheets\Existing Bridge Plans\D366H21-int-Existing Bridge Plans 0228-0229-024.dgn

QUIGG ENGINEERING INC

USER NAME = mwilson	DESIGNED -	REVISED -
	DRAWN -	REVISED -
PLOT SCALE = 2.0000 ' / in.	CHECKED -	REVISED -
PLOT DATE = 10/2/2019	DATE - 10/4/2019	REVISED -

STATE OF ILLINOIS
DEPARTMENT OF TRANSPORTATION

EXISTING STRUCTURAL PLANS
STRUCTURE NO. 050-0228/0229

SCALE: | SHEET 24 OF 30 SHEETS | STA. TO STA.

F.A.I RTE.	SECTION	COUNTY	TOTAL SHEETS	SHEET NO.
80	50-2(HB-2)BDR(HB-1)BR(BR)BR-1	LASALLE	328	229
		CONTRACT NO. 66H21		
	ILLINOIS	FED. AID PROJECT		

ROUTE NO.	SECTION	COUNTY	TOTAL SHEETS	SHEET NO.
F.A.I. 80	*	LaSALLE	196	63
FED. ROAD DIST. NO. 7	ILLINOIS	PROJECT-		

SHEET 25 of 31
*(50-2)HBR-, HB-2, BR

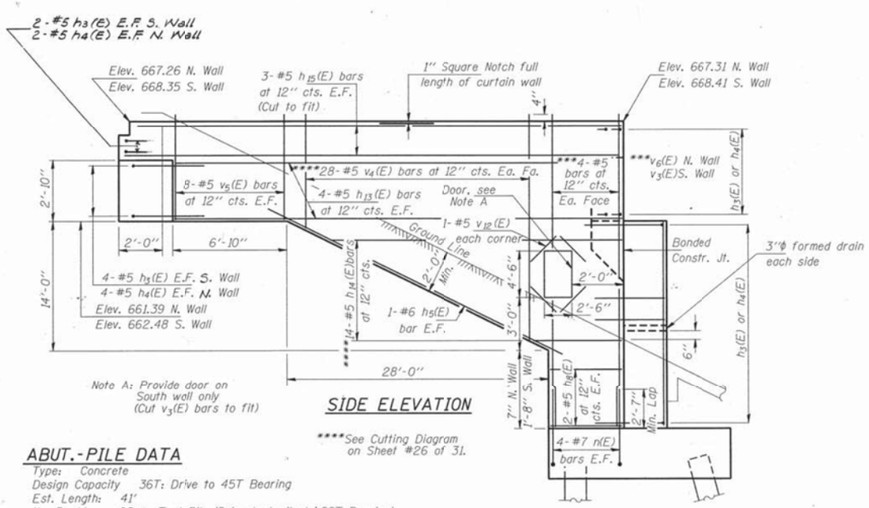

ABUT.-PILE DATA

Type: Concrete
Design Capacity 36T: Drive to 45T Bearing
Est. Length: 41'
No. Req'd.: 26+1 Test Pile (Drive test pile to 68T Bearing) NEAR THE EAST ABUTMENT AS DIRECTED BY THE ENGINEER.

APPR. BENT-PILE DATA

Type: Concrete
Design Capacity 30T: Drive to 45T Bearing
Est. Length: 58'
No. Req'd.: 9

* SEAT ELEVATIONS

BEAM	1A	2A	3A	4A	5A	6A	7A
W. Brg.	662.45	662.64	662.82	663.00	663.18	663.37	663.55
BEAM	1	2	3	4	5	6	
E. Brg.	664.27	664.49	664.71	664.93	665.15	665.37	
App. Brg.	664.22	664.44	664.66	664.88	665.10	665.31	

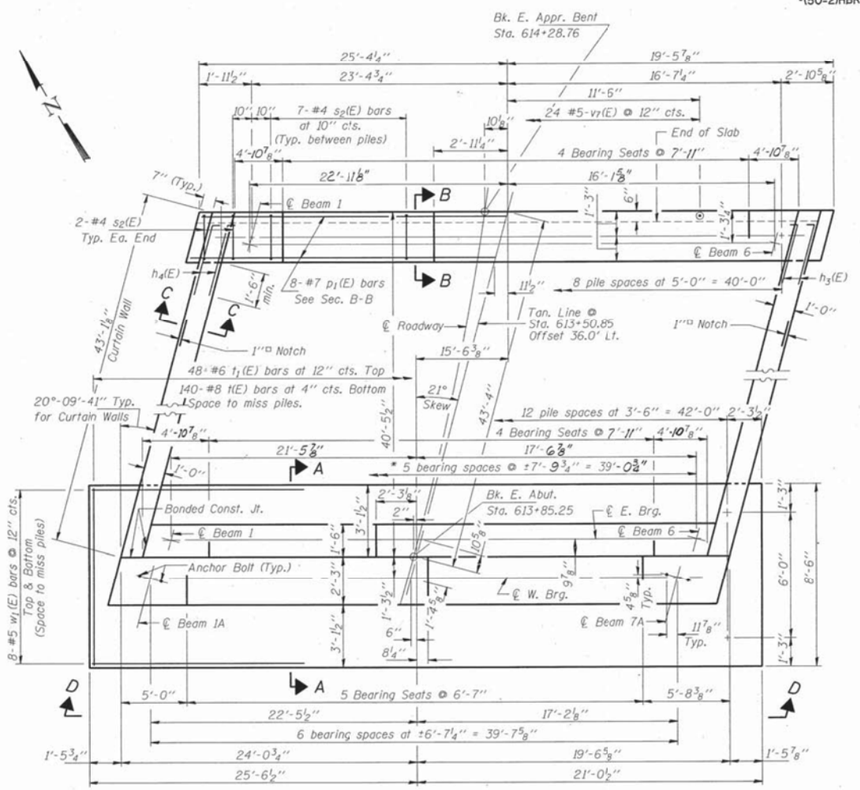

PLAN

* Typ. for approach beams.

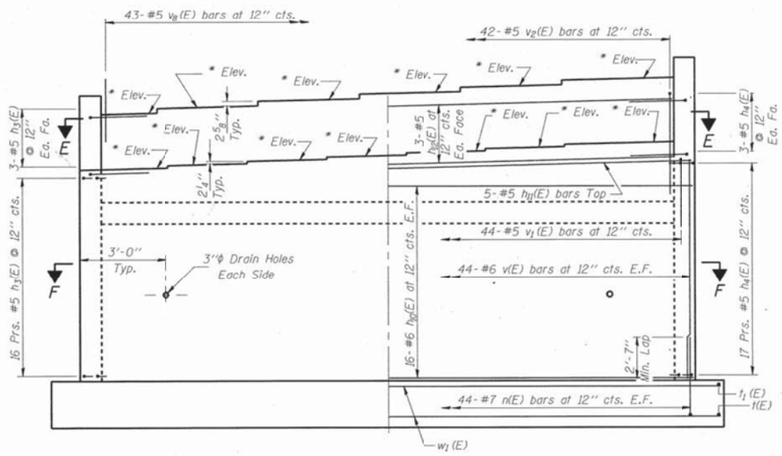

VIEW D-D

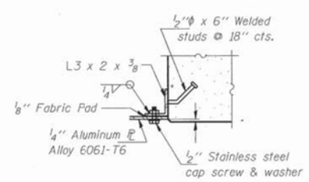

SECTION G-G

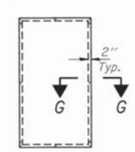

DOOR ELEVATION
(Cost of door & frame is incidental)

Notes: Space reinforcement in cap to miss anchor bolts.
Reinforcement bars designated (E) shall be epoxy coated.
See sheet #26 for section A-A, B-B, C-C, E-E, F-F

EAST ABUTMENT W. BOUND LANES
F.A.I. 80 OVER F.A.U. 6081 (LaSalle RD.)
SECTION (50-2) HB-2
STATION 613+50.85
LaSALLE COUNTY
STRUCTURE NUMBERS 050-0228 & 0229

FOR INFORMATION ONLY

MODEL: Default
FILE NAME: \\QuiggProjects\2018\18L018 Various Structure IDOT D3 Farnsworth PTB 161-21\Work Order 14 - I-80 Roadway and other\CADD\CADD Sheets\Existing Bridge Plans\D366H21-sht-Existing Bridge Plans 0228-0229-025.dgn

QUIGG ENGINEERING INC

USER NAME = mwilson	DESIGNED -	REVISED -	
	DRAWN -	REVISED -	
PLOT SCALE = 2.0000 ' / in.	CHECKED -	REVISED -	
PLOT DATE = 10/2/2019	DATE - 10/4/2019	REVISED -	

STATE OF ILLINOIS
DEPARTMENT OF TRANSPORTATION

EXISTING STRUCTURAL PLANS
STRUCTURE NO. 050-0228/0229

SCALE: SHEET 25 OF 30 SHEETS STA. TO STA.

F.A.I RTE.	SECTION	COUNTY	TOTAL SHEETS	SHEET NO.
80	50-2(HB-2)BDR(HB-1)BR(BR)BR-1	LASALLE	328	230
		CONTRACT NO. 66H21		
		ILLINOIS FED. AID PROJECT		

ROUTE NO.	SECTION	COUNTY	TOTAL SHEETS	SHEET NO.
F.A.I. 80	*	LaSALLE	196	64
FED. ROAD DIST. NO. 7	ILLINOIS	PROJECT-		

SHEET 26 OF 31
*(50-2)HBR-I, HB-2, BR

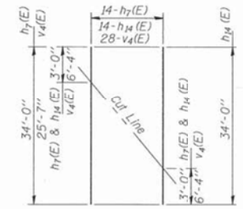

FIELD CUTTING DIAGRAM

Order $h_7(E)$, $h_{14}(E)$ & $v_4(E)$ bars full length. Cut to fit as shown and use remainder of bars in other face.

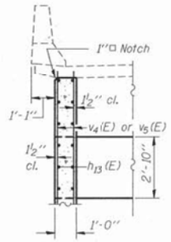

SECTION C-C

@ E. Abut.

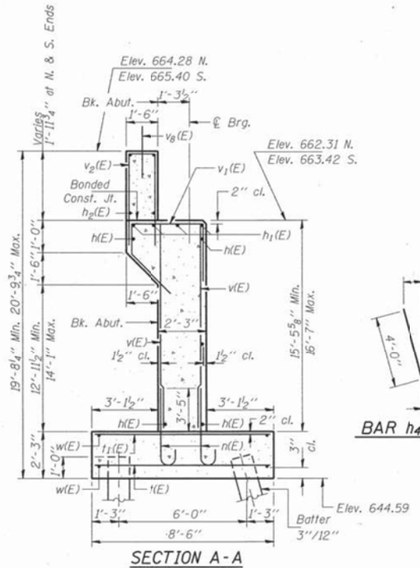

SECTION A-A

@ W. Abut.

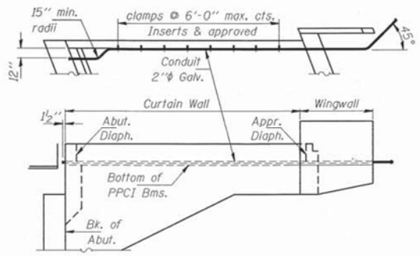

ELECTRICAL CONDUIT DETAILS

Locate on North side only
(INCIDENTAL TO CONCRETE STRUCTURES)

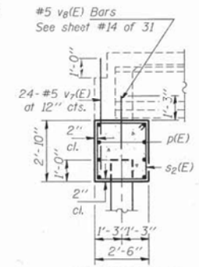

SECTION B-B

@ W. Abut.

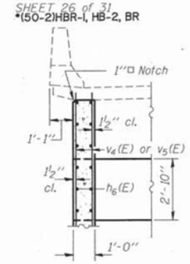

SECTION C-C

@ W. Abut.

BAR $h_3(E)$

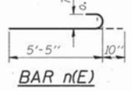

BAR n(E)

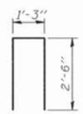

BAR $v_2(E)$

BAR $h_4(E)$

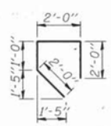

BAR $v_1(E)$

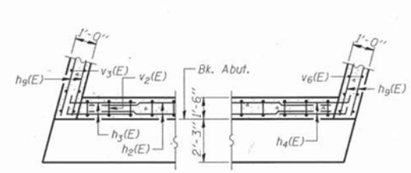

SECTION E-E

@ W. Abut.

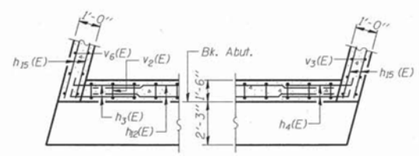

SECTION E-E

@ E. Abut.

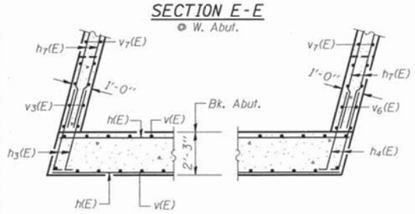

SECTION F-F

@ W. Abut.

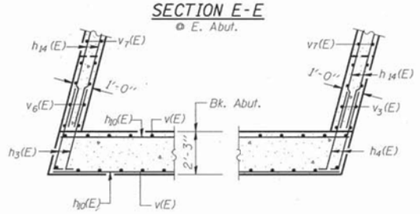

SECTION F-F

@ E. Abut.

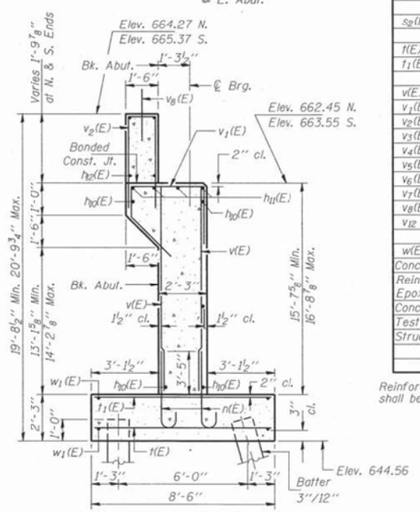

SECTION A-A

@ E. Abut.

Reinforcement bars designated (E) shall be Epoxy Coated

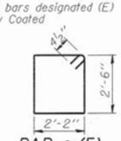

BAR $s_2(E)$

WEST ABUTMENT BILL OF MATERIAL

Bar	No.	Size	Length	Shape
h(E)	32	#6	44'-0"	
h1(E)	4	#5	44'-0"	
h2(E)	6	#5	41'-9"	
h3(E)	52	#5	4'-6"	L
h4(E)	50	#5	4'-6"	J
h5(E)	4	#5	32'-0"	
h6(E)	16	#5	40'-8"	
h7(E)	28	#5	34'-0"	
h8(E)	8	#5	2'-10"	
h9(E)	12	#5	43'-5"	
n(E)	90	#7	6'-3"	
p(E)	8	#7	45'-1"	
s2(E)	46	#4	10'-1"	
t(E)	142	#8	8'-3"	
t1(E)	48	#6	8'-3"	
v(E)	90	#6	15'-3"	
v1(E)	45	#5	7'-0"	
v2(E)	43	#5	6'-3"	
v3(E)	8	#5	19'-0"	
v4(E)	56	#5	25'-7"	
v5(E)	32	#5	6'-1"	
v6(E)	8	#5	17'-11"	
v7(E)	24	#5	3'-6"	
v8(E)	143	#5	2'-6"	
v12(E)	4	#5	4'-0"	
w(E)	16	#5	47'-0"	
Concrete Structures			Cu. Yd.	147.3
Reinforcement Bars. Epoxy Coated			Lbs.	17270
Concrete Piles			Foot	1305
Test Piles Concrete			Each	1
Structure Excavation			Cu. Yd.	239.4

EAST ABUTMENT BILL OF MATERIAL

Bar	No.	Size	Length	Shape
h3(E)	50	#5	4'-6"	L
h4(E)	52	#5	4'-6"	J
h5(E)	4	#5	32'-0"	
h8(E)	8	#5	2'-10"	
h10(E)	32	#6	43'-3"	
h11(E)	4	#5	43'-3"	
h12(E)	6	#5	41'-2"	
h13(E)	16	#5	40'-0"	
h14(E)	28	#5	34'-0"	
h15(E)	12	#5	42'-9"	
n(E)	88	#7	5'-3"	
p1(E)	8	#7	44'-6"	
s2(E)	46	#4	10'-1"	
t(E)	140	#8	8'-3"	
t1(E)	48	#6	8'-3"	
v(E)	88	#6	15'-3"	
v1(E)	44	#5	7'-0"	
v2(E)	42	#5	6'-3"	
v3(E)	8	#5	19'-0"	
v4(E)	56	#5	25'-7"	
v5(E)	32	#5	6'-1"	
v6(E)	8	#5	17'-11"	
v7(E)	24	#5	3'-6"	
v8(E)	143	#5	2'-6"	
v12(E)	4	#5	4'-0"	
w1(E)	16	#5	46'-4"	
Concrete Structures			Cu. Yd.	146.2
Reinforcement Bars. Epoxy Coated			Lbs.	17060
Concrete Piles			Foot	1588
Test Piles Concrete			Each	1
Structure Excavation			Cu. Yd.	239.4

ABUTMENT DETAILS
WEST BOUND LANES

F.A.I. 80 OVER F.A.U. 6081 (LaSalle RD.)
SECTION (50-2) HB-2
STATION 613+50.85
LaSALLE COUNTY
STRUCTURE NUMBERS 050-0228 & 0229

FOR INFORMATION ONLY

MODEL: Default
FILE NAME: \\QuiggProjects\2018\IL018 Various Structure IDOT D3 Farnsworth PTB 161-2\Work Order 14 - I-80 Roadway and other\CADD\CADD Sheets\Existing Bridge Plans\0366H21-sht-Existing Bridge Plans 0228-0229-026.dgn

QUIGG ENGINEERING INC

USER NAME = mwilson	DESIGNED -	REVISED -	
	DRAWN -	REVISED -	
PLOT SCALE = 2.0000 ' / in.	CHECKED -	REVISED -	
PLOT DATE = 10/2/2019	DATE - 10/4/2019	REVISED -	

STATE OF ILLINOIS
DEPARTMENT OF TRANSPORTATION

EXISTING STRUCTURAL PLANS
STRUCTURE NO. 050–0228/0229

SCALE: | SHEET 26 OF 30 SHEETS | STA. | TO STA.

F.A.I RTE.	SECTION	COUNTY	TOTAL SHEETS	SHEET NO.
80	50-2(HB-2)BDR(HB-1)BR(BR)BR-1	LASALLE	328	231
		CONTRACT NO. 66H21		
	ILLINOIS	FED. AID PROJECT		

ROUTE NO.	SECTION	COUNTY	TOTAL SHEETS	SHEET NO.
F.A.I. 80	*	LaSALLE	196	65
FED. ROAD DIST. NO. 7	ILLINOIS	PROJECT-		

SHEET 27 of 31
*(50-2)HBR-1, HB-2, BR

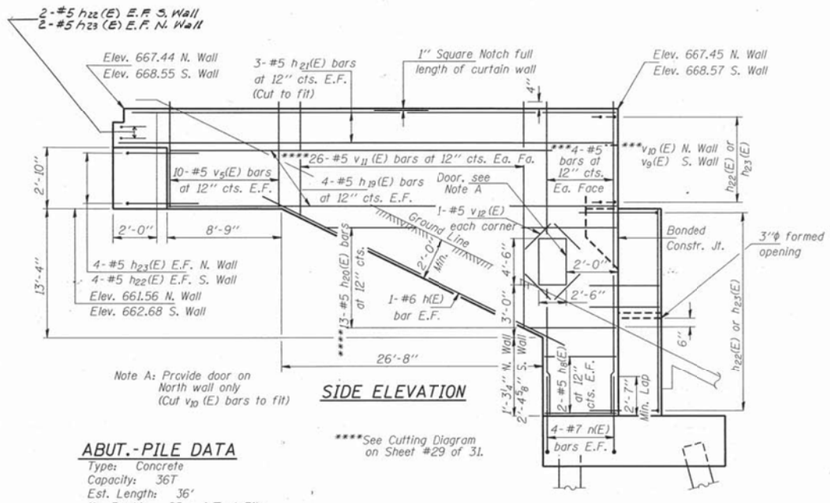

ABUT.-PILE DATA

Type: Concrete
Capacity: 36T
Est. Length: 36'
No. Req'd.: 25 + 1 Test Pile

APPR. BENT-PILE DATA

Type: Concrete
Capacity: 33T
Est. Length: 45'
No. Req'd. 9

* SEAT ELEVATIONS

BEAM	8A	9A	10A	11A	12A	13A	14A
E. Brg.	662.43	662.62	662.80	662.99	663.17	663.36	663.54
BEAM	7	8	9	10	11	12	
W. Brg.	664.41	664.64	664.86	665.08	665.30	665.53	
App. Brg.	664.39	664.62	664.84	665.07	665.29	665.51	

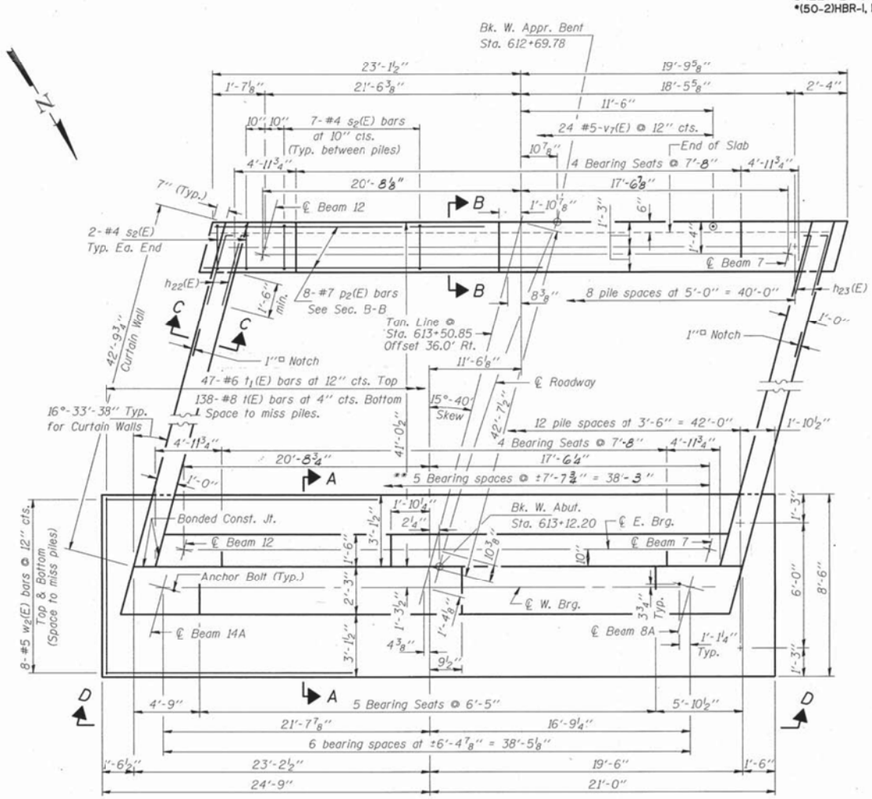

PLAN

** Typ. for approach beams

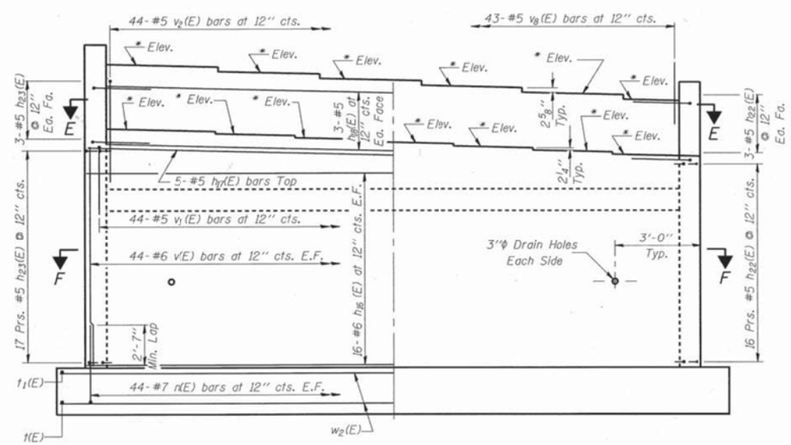

VIEW D-D

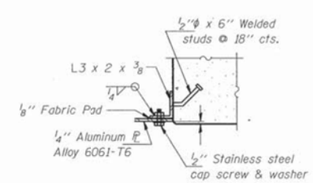

SECTION G-G

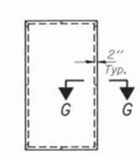

DOOR ELEVATION
(Cost of door & frame is incidental)

Notes: Space reinforcement in cap to miss anchor bolts.
Reinforcement bars designated (E) shall be epoxy coated.
See sheet #29 for Sections A-A, B-B C-C, E-E and F-F.

WEST ABUTMENT E. BOUND LANES
F.A.I. 80 OVER F.A.U. 6081 (LaSalle RD.)
SECTION (50-2)HB-2
STATION 613+50.85
LaSALLE COUNTY
STRUCTURE NUMBERS 050-0228 & 0229

FOR INFORMATION ONLY

MODEL: Default
FILE NAME: \\QuiggProjects\2018\18IL018 Various Structure IDOT D3 Farnsworth PTB 161-21\Work Order 14 - I-80 Roadway and other\CADD\CADD Sheets\Existing Bridge Plans\0366H21-sht-Existing Bridge Plans 0228-0229-027.dgn

QUIGG ENGINEERING INC

USER NAME = mwilson	DESIGNED -	REVISED -	
	DRAWN -	REVISED -	
PLOT SCALE = 2.0000 ' / in.	CHECKED -	REVISED -	
PLOT DATE = 10/2/2019	DATE - 10/4/2019	REVISED -	

STATE OF ILLINOIS
DEPARTMENT OF TRANSPORTATION

EXISTING STRUCTURAL PLANS
STRUCTURE NO. 050-0228/0229

SCALE: SHEET 27 OF 30 SHEETS STA. TO STA.

F.A.I RTE.	SECTION	COUNTY	TOTAL SHEETS	SHEET NO.
80	50-2(HB-2)BDR(HB-1)BR(BR)BR-1	LASALLE	328	232
		CONTRACT NO. 66H21		
		ILLINOIS FED. AID PROJECT		

ROUTE NO.	SECTION	COUNTY	TOTAL SHEETS	SHEET NO.
F.A.I. 80	*	LaSALLE	196	66
FED. ROAD DIST. NO. 7	ILLINOIS	PROJECT-		

SHEET 28 of 31
*(50-2)HBR-I, HB-2, BR

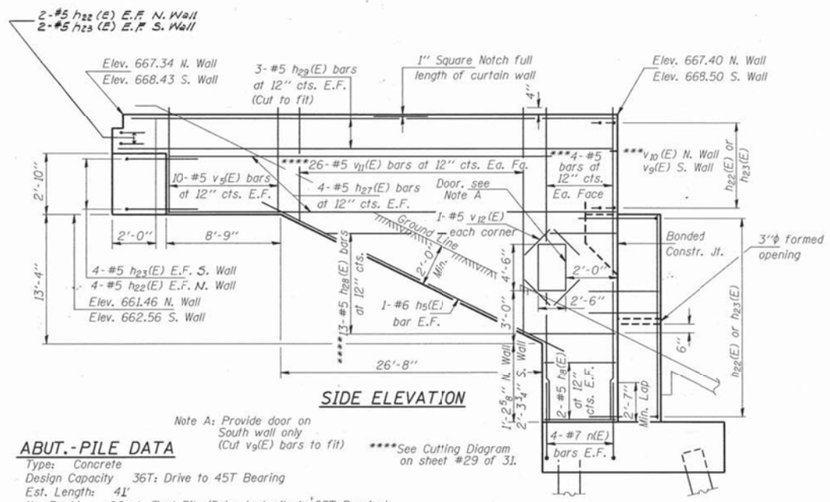

SIDE ELEVATION

Note A: Provide door on South wall only (Cut v_9(E) bars to fit)

****See Cutting Diagram on sheet #29 of 31.

ABUT.-PILE DATA

Type: Concrete
Design Capacity 36T: Drive to 45T Bearing
Est. Length: 41'
No. Req'd.: 26 + 1 Test Pile (Drive test pile to 68T Bearing) NEAR THE EAST ABUTMENT AS DIRECTED BY THE ENGINEER.

APPR. BENT-PILE DATA

Type: Concrete
Design Capacity 33T: Drive to 45T Bearing
Est. Length: 58'
No. Req'd.: 9

* SEAT ELEVATIONS

BEAM	8A	9A	10A	11A	12A	13A	14A
W. Brg.	662.55	662.74	662.92	663.10	663.29	663.47	663.65
BEAM	7	8	9	10	11	12	
E. Brg.	664.36	664.58	664.80	665.02	665.24	665.46	
App. Brg.	664.30	664.52	664.73	664.95	665.17	665.39	

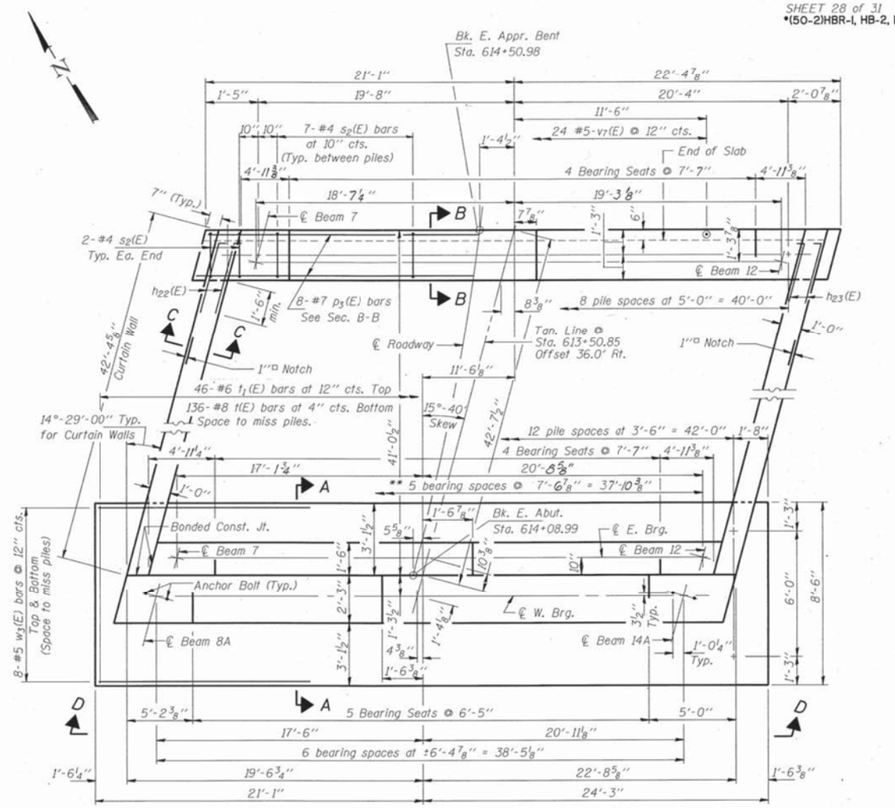

PLAN

** Typ. for approach beams.

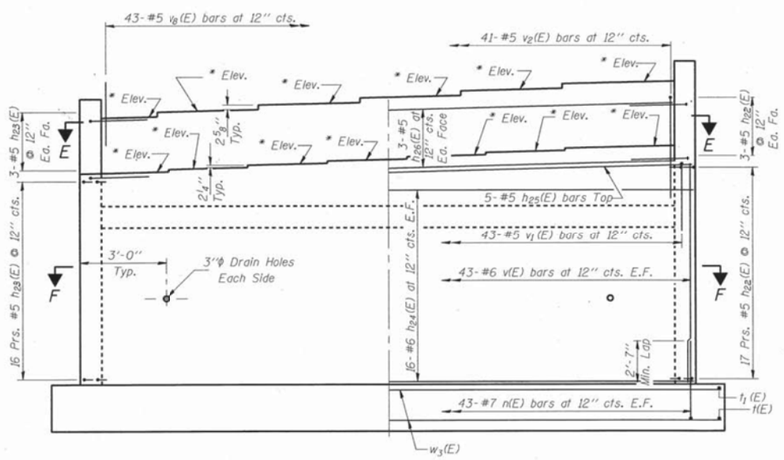

VIEW D-D

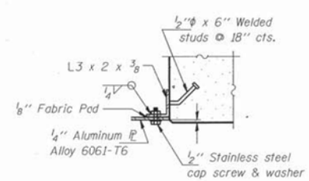

SECTION G-G

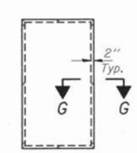

DOOR ELEVATION

(Cost of door & frame is incidental)

Notes: Space reinforcement in cap to miss anchor bolts.
Reinforcement bars designated (E) shall be epoxy coated.
See sheet #29 for Sections A-A, B-B, C-C, E-E and F-F.

EAST ABUTMENT E. BOUND LANES

F.A.I. 80 OVER F.A.U. 6081 (LaSalle RD.)
SECTION (50-2) HB-2
STATION 613+50.85
LaSALLE COUNTY
STRUCTURE NUMBERS 050-0228 & 0229

FOR INFORMATION ONLY

MODEL: Default
FILE NAME: \\QuiggProjects\2018\18IL018 Various Structure IDOT D3 Farnsworth PTB 161-2\Work Order 14 - I-80 Roadway and other\CADD\CADD Sheets\Existing Bridge Plans\0366121-Int-Existing Bridge Plans 0228-0229-028.dgn

QUIGG ENGINEERING INC

USER NAME = mwilson	DESIGNED -	REVISED -	
	DRAWN -	REVISED -	
PLOT SCALE = 2.0000 ' / in.	CHECKED -	REVISED -	
PLOT DATE = 10/2/2019	DATE - 10/4/2019	REVISED -	

STATE OF ILLINOIS
DEPARTMENT OF TRANSPORTATION

EXISTING STRUCTURAL PLANS
STRUCTURE NO. 050-0228/0229

SCALE: SHEET 28 OF 30 SHEETS STA. TO STA.

F.A.I RTE.	SECTION	COUNTY	TOTAL SHEETS	SHEET NO.
80	50-2(HB-2)BDR(HB-1)BR(BR)BR-1	LASALLE	328	233
		CONTRACT NO. 66H21		
		ILLINOIS FED. AID PROJECT		

ROUTE NO.	SECTION	COUNTY	TOTAL SHEETS	SHEET NO.
F.A.I. 80	*	LaSALLE	196	67
FED. ROAD DIST. NO. 7	ILLINOIS	PROJECT-		

SHEET 29 OF 31
*(50-2)HBR-1, HB-2, BR

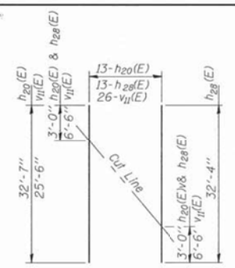

FIELD CUTTING DIAGRAM

Order h20(E), h28(E) & v11(E) bars full length. Cut to fit as shown and use remainder of bars in other face.

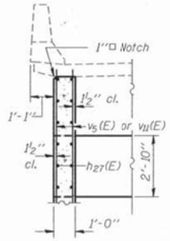

SECTION C-C
@ E. Abut.

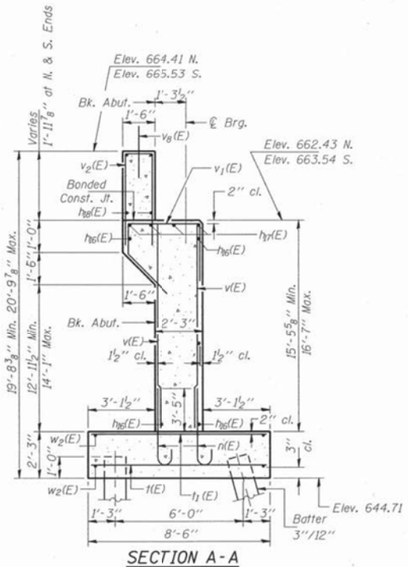

SECTION A-A
@ W. Abut.

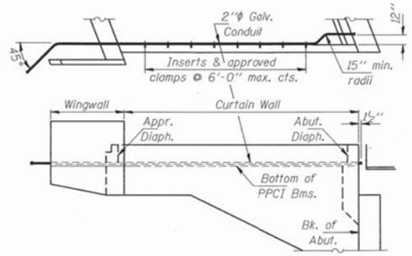

ELECTRICAL CONDUIT DETAILS

Locate on South side only
(INCIDENTAL TO CONCRETE STRUCTURES)

BAR h23(E) BAR h22(E)

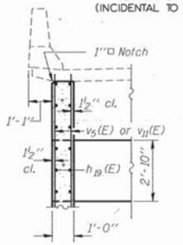

SECTION C-C
@ W. Abut.

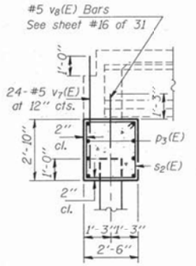

SECTION B-B
@ E. Abut.

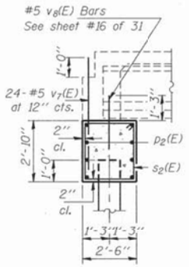

SECTION B-B
@ W. Abut.

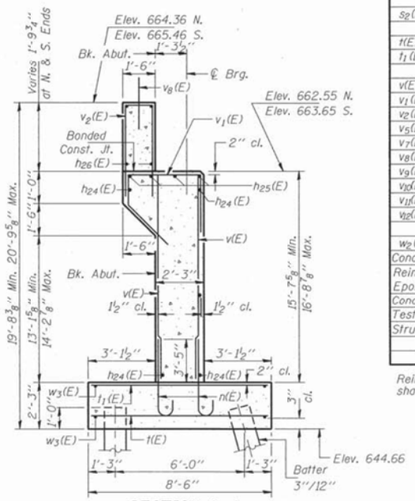

SECTION A-A
@ E. Abut.

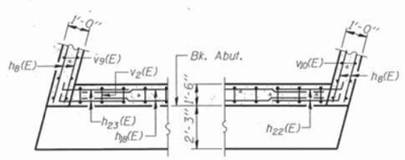

SECTION E-E
@ W. Abut.

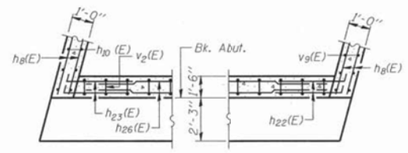

SECTION E-E
@ E. Abut.

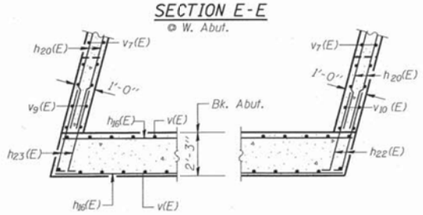

SECTION F-F
@ W. Abut.

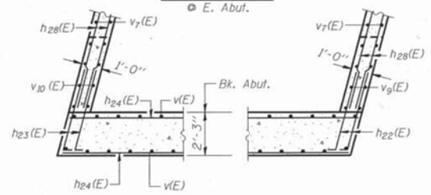

SECTION F-F
@ E. Abut.

WEST ABUTMENT BILL OF MATERIAL

Bar	No.	Size	Length	Shape
h5(E)	4	#5	32'-0"	
h8(E)	8	#5	2'-10"	
h9(E)	32	#6	42'-5"	
h17(E)	4	#5	42'-5"	
h18(E)	6	#5	40'-4"	
h19(E)	16	#5	40'-0"	
h20(E)	26	#5	32'-7"	
h21(E)	12	#5	42'-7"	
h22(E)	50	#5	4'-6"	J
h23(E)	52	#5	4'-6"	L
n(E)	88	#7	6'-3"	
p2(E)	8	#7	43'-8"	
s2(E)	46	#4	10'-1"	
t(E)	138	#8	8'-3"	
t1(E)	47	#6	8'-3"	
v(E)	88	#6	15'-3"	
v1(E)	44	#5	7'-0"	
v2(E)	42	#5	6'-3"	
v5(E)	40	#5	6'-1"	
v7(E)	24	#5	3'-6"	
v8(E)	143	#5	2'-6"	
v9(E)	8	#5	21'-11"	
v10(E)	8	#5	20'-9"	
v11(E)	52	#5	25'-6"	
v12(E)	4	#5	4'-0"	
w2(E)	16	#5	45'-5"	
Concrete Structures			Cu. Yd.	143.6
Reinforcement Bars, Epoxy Coated			Lbs.	16780
Concrete Piles			Foot	1305
Test Piles Concrete			Each	1
Structure Excavation			Cu. Yd.	239.4

Reinforcement bars designated (E) shall be Epoxy Coated

EAST ABUTMENT BILL OF MATERIAL

Bar	No.	Size	Length	Shape
h5(E)	4	#5	32'-0"	
h8(E)	8	#5	2'-10"	
h22(E)	52	#5	4'-6"	J
h23(E)	50	#5	4'-6"	L
h24(E)	32	#6	42'-0"	
h25(E)	4	#5	42'-0"	
h26(E)	6	#5	39'-11"	
h27(E)	16	#5	39'-7"	
h28(E)	26	#5	32'-4"	
h29(E)	12	#5	42'-2"	
n(E)	86	#7	6'-3"	
p3(E)	8	#7	43'-3"	
s2(E)	46	#4	10'-1"	
t(E)	136	#8	8'-3"	
t1(E)	46	#6	8'-3"	
v(E)	86	#6	15'-3"	
v1(E)	43	#5	7'-0"	
v2(E)	41	#5	6'-3"	
v5(E)	40	#5	6'-1"	
v7(E)	24	#5	3'-6"	
v8(E)	143	#5	2'-6"	
v9(E)	8	#5	21'-11"	
v10(E)	8	#5	20'-9"	
v11(E)	52	#5	25'-6"	
v12(E)	4	#5	4'-0"	
w3(E)	16	#5	45'-1"	
Concrete Structures			Cu. Yd.	142.3
Reinforcement Bars Epoxy Coated			Lbs.	16600
Concrete Piles			Foot	1588
Test Piles Concrete			Each	1
Structure Excavation			Cu. Yd.	239.4

For n(E), s2(E), v1(E) & v2(E) Bar Details, see sheet #26 of 31.

ABUTMENT DETAILS
EAST BOUND LANES
F.A.I. 80 OVER F.A.U. 6081 (LaSalle RD.)
SECTION (50-2) HB-2
STATION 613+50.85
LaSALLE COUNTY
STRUCTURE NUMBERS 050-0228 & 0229

FOR INFORMATION ONLY

MODEL: Default
FILE NAME: \\QuigpProjects\2018\18L018 Various Structure IDOT D3 Farnsworth PTB 161-21\Work Order 14 - I-80 Roadway and other\CADD\CADD Sheets\Existing Bridge Plans\0366H21-sht-Existing Bridge Plans 0228-0229-029.dgn

QUIGG ENGINEERING INC

USER NAME = mwilson	DESIGNED -	REVISED -	
	DRAWN -	REVISED -	
PLOT SCALE = 2.0000 ' / in.	CHECKED -	REVISED -	
PLOT DATE = 10/2/2019	DATE - 10/4/2019	REVISED -	

STATE OF ILLINOIS
DEPARTMENT OF TRANSPORTATION

EXISTING STRUCTURAL PLANS
STRUCTURE NO. 050-0228/0229

SCALE: SHEET 29 OF 30 SHEETS STA. TO STA.

F.A.I RTE.	SECTION	COUNTY	TOTAL SHEETS	SHEET NO.
80	50-2(HB-2)BDR(HB-1)BR(BR)BR-1	LASALLE	328	234
		CONTRACT NO. 66H21		
	ILLINOIS	FED. AID PROJECT		

ROUTE NO.	SECTION	COUNTY	TOTAL SHEETS	SHEET NO.
F.A.I. 80	*	LaSALLE	196	69

SHEET 31 OF 31
*(50-2)HBR-1, HB-2, BR

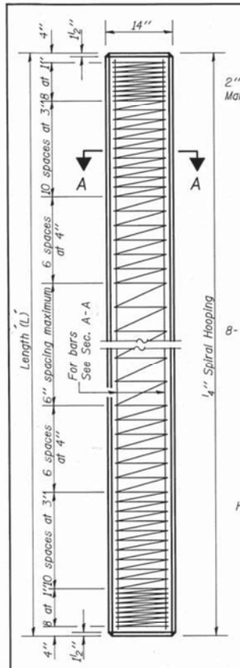

SECTION A-A
FOR PILES UNDER 45' LONG

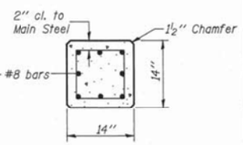

SECTION A-A
FOR PILES 45' OR MORE

Handling: For Pile lengths up to 45' use two slings placed at a distance of 0.21L from each end. For Piles longer than 45', use three slings placed at a distance of 0.12L from each end and at mid point of pile.

DETAIL OF PRECAST CONCRETE PILES

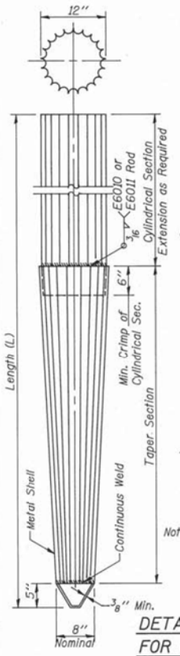

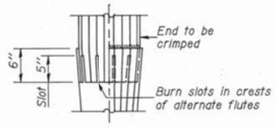

FIELD CRIMP DETAIL

Note: 6" Crimp shall either be supplied on the cylindrical section or made in the field as detailed.

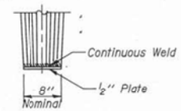

OPTIONAL FLAT END

ALLOWABLE TAPER SECTIONS

10' Length-Taper 1" in 2'-6"
17' Length-Taper 1" in 4'-0"
25' Length-Taper 1" in 7'-0"
30' Length-Taper 1" in 7'-0"

Note: The thickness of the shell shall be 0.1495 inches with a tolerance of 5%. The shell shall be in accordance with Article 706.05 (a) of the Standard Specification except that minimum yield strength for the steel after cold working shall be 50,000 p.s.i.

DETAIL OF TAPERED METAL SHELLS FOR CAST IN PLACE CONCRETE PILES

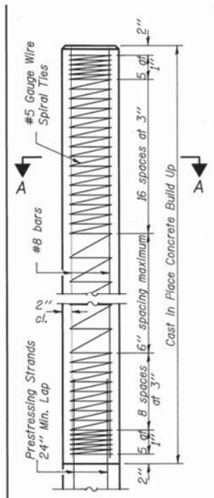

PILE BUILD UP

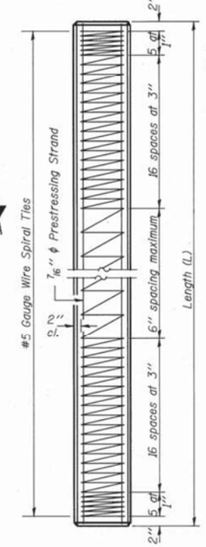

PILE PLAN

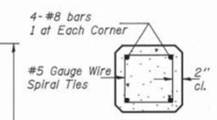

SECTION A-A

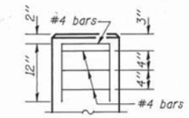

ELEVATION
(End Reinforcement)

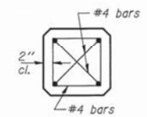

PLAN
(End Reinforcement)

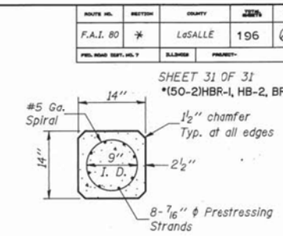

SECTION THRU PILE

DESIGN STRESSES

f'_c = 5,000 p.s.i.
f'_{ci} = 4,000 p.s.i.
f'_s = 270,000 p.s.i. (31,000 lbs.-7/16" ϕ or 41,300 lbs.-½" ϕ)
f'_{si} = 189,000 p.s.i. (21,700 lbs.-7/16" ϕ or 28,900 lbs.-½" ϕ)

NOTES

Prestressing steel shall be non-galvanized extra high strength stress-relieved 7-wire strand. The nominal diameter shall be 7/16" and the minimum nominal cross-sectional area shall be 0.115 sq. in. or the equivalent 6-½" ϕ strands with a cross-sectional area of 0.153 sq. in. may be used.

For Pile lengths up to 65', use two slings placed at a distance of 0.21 L* from each end. For Piles longer than 65', use three slings placed at a distance of 0.12 L* from each end and at midpoint of pile. *L= Overall length of pile to be handled.

PRECAST PRESTRESSED CONCRETE PILE

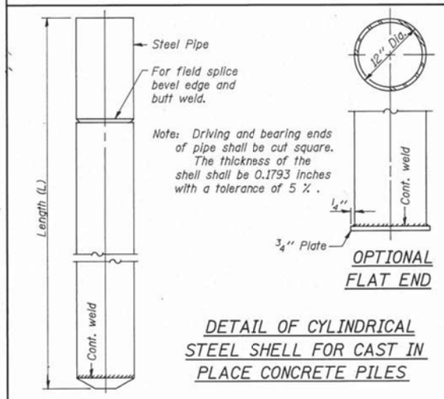

Note: Driving and bearing ends of pipe shall be cut square. The thickness of the shell shall be 0.1793 inches with a tolerance of 5 %.

OPTIONAL FLAT END

DETAIL OF CYLINDRICAL STEEL SHELL FOR CAST IN PLACE CONCRETE PILES

The cost of Reinforcement is incidental to the cost of furnishing piles.

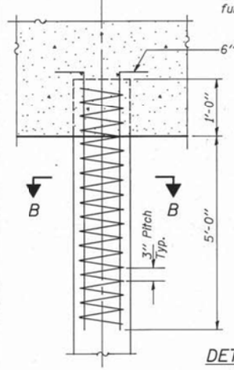

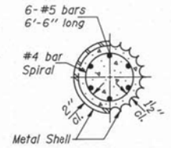

SECTION B-B

Reinforcement in top of pile shall be omitted under pier footings when placed in natural ground.

DETAIL OF REINFORCEMENT FOR METAL SHELLS

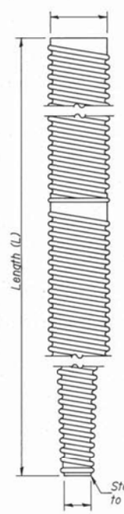

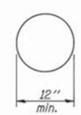

BUTT

At least 10% of the length of pile shall have a Butt diameter equal to or greater than 12".

Gauges are furnished to suit soil conditions (16 Gauge avg. min.)

POINT
(Applies only to Step Taper type pile)

PILE REINFORCEMENT

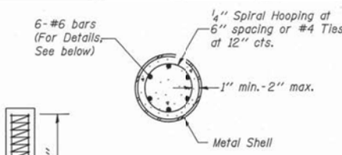

SECTION A-A

Reinforcement is incidental to the cost of furnishing piles.

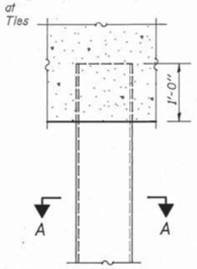

DETAIL OF MANDREL DRIVEN STRAIGHT OR STEP-TAPER PILES FOR CAST IN PLACE CONCRETE PILES

PILE ALTERNATES
F.A.I. 80 OVER F.A.U. 6081 (LaSalle RD.)
SECTION (50-2) HB-2
STATION 613+50.85
LaSALLE COUNTY
STRUCTURE NUMBERS 050-0228 & 0229

TENNEY PAVONI ASSOCIATES, INC.
CONSULTING ENGINEERS
DESIGNED D.A.B. CHECKED M.C.B.
DRAWN D.A.B. DATE 7-9-93 NO. 310

X-3 8-30-83

FOR INFORMATION ONLY

MODEL: Default
FILE NAME: \\QuiggProjects\2018\18L018 Various Structure IDOT D3 Farnsworth PTB 161-2\Work Order 14 - I-80 Roadway and other\CADD\CADD Sheets\Existing Bridge Plans\0366H21-sht-Existing Bridge Plans 0228-0229-038.dgn

QUIGG ENGINEERING INC

USER NAME = mwilson	DESIGNED -	REVISED -	
	DRAWN -	REVISED -	
PLOT SCALE = 2.0000 ' / in.	CHECKED -	REVISED -	
PLOT DATE = 10/2/2019	DATE - 10/4/2019	REVISED -	

STATE OF ILLINOIS
DEPARTMENT OF TRANSPORTATION

EXISTING STRUCTURAL PLANS
STRUCTURE NO. 050-0228/0229

SCALE: SHEET 30 OF 30 SHEETS STA. TO STA.

F.A.I RTE.	SECTION	COUNTY	TOTAL SHEETS	SHEET NO.
80	50-2(HB-2)BDR(HB-1)BR(BR)BR-1	LASALLE	328	235
		CONTRACT NO. 66H21		
		ILLINOIS	FED. AID PROJECT	

FEDERAL AID PROJECT	SEC	COUNTY	TOTAL SHEETS	SHEET NO.
F.A.I.80	50-2VB 50-2HB-1	LA SALLE	65	1

STATE OF ILLINOIS
DEPARTMENT OF PUBLIC WORKS AND BUILDINGS
DIVISION OF HIGHWAYS
PLANS FOR PROPOSED
FEDERAL - AID INTERSTATE HIGHWAY

SCALES

PLAN	1 INCH	100 FT
PROFILE HOR	1 INCH	100 FT
PROFILE VERT	1 INCH	10 FT
CROSS-SECTIONS	1 INCH	5 FT.

F.A.I. ROUTE 80, SECTION 50-2VB & 50-2HB-1
PROJECT I-IG-80-3(35)77
LA SALLE COUNTY

SECTION 50-2HB-1 INCLUDES-TWO PARALLEL REINFORCED CONCRETE GIRDER BRIDGES, CONSISTING OF ONE SPAN 45'-3" ON R C CLOSED ABUTMENTS AND RETAINING WALLS CARRYING F.A.I. ROUTE 80 OVER TOWNSHIP ROAD AT STATION 627+23.50, SURVEY LINE ON F.A.I. ROUTE 80.

SECTION 50-2VB INCLUDES-TWO PARALLEL PRECAST PRESTRESSED CONCRETE I-BEAM BRIDGE, CONSISTING OF ONE 6-SPAN BRIDGE AND ONE 7-SPAN BRIDGE ON R.C. OPEN PIERS AND PILE BLOCK ABUTMENTS CARRYING F.A.I. ROUTE 80 OVER U.S. ROUTE 51, THE LA SALLE BUREAU COUNTY RAILROAD AND THE ILLINOIS CENTRAL RAILROAD AT STATION 614+15, SURVEY LINE ON F.A.I. ROUTE 80.

SECTION 50-2HB-1 BEGINS
STA. 626+67.12
ON F.A.I. ROUTE 80.

SECTION 50-2VB ENDS
STA. 616+77.45
ON F.A.I. ROUTE 80.

PROJECT BEGINS
SECTION 50-2VB BEGINS
STA. 612+75.23
ON F.A.I. ROUTE 80.

OMISSION FROM PROJECT
STA. 616+77.45 to 626+67.12

PROJECT ENDS
SECTION 50-2HB-1 ENDS
STA. 627+12.37
ON F.A.I. ROUTE 80.

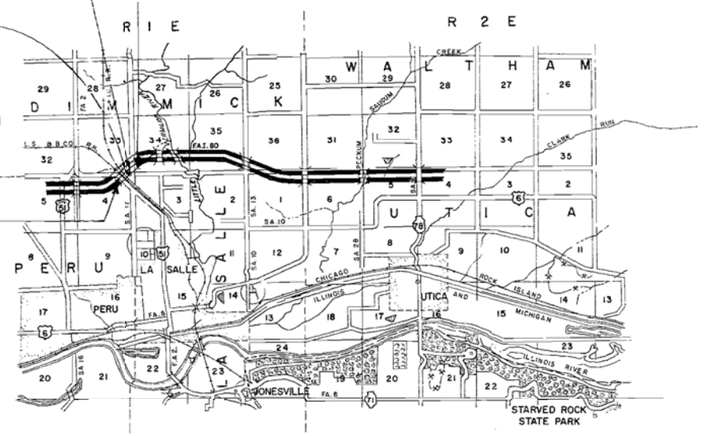

LOCATION OF SECTION INDICATED THUS:-

1979 HIGHWAY CLASSIFICATION
SECTIONS 50-2VB & 50-2HB-1
1965- T-70

STATE OF ILLINOIS
DEPARTMENT OF PUBLIC WORKS AND BUILDINGS
DIVISION OF HIGHWAYS

March 20, 61
March 20, 61
March 20, 61
March 20, 61

March 20, 61

DEPARTMENT OF COMMERCE
BUREAU OF PUBLIC ROADS
APPROVED
DIVISION ENGINEER — DATE

NET LENGTH OF PROJECT 447.47 FT. = 0.085 MILE

Job No 20824

LA SALLE COUNTY SECTION 50-2VB / 50-2HB-1 F. A.I. ROUTE 80

FOR INFORMATION ONLY

MODEL: Default
FILE NAME: \\Quigg\Projects\2018\18\L018 Various Structure IDOT D3 Farnsworth PTB 161-21\Work Order 14 - I-80 Roadway and other\CADD\CADD Sheets\Existing Bridge Plans 0228-0229-031.dgn

QUIGG ENGINEERING INC

USER NAME = mwilson	DESIGNED -	REVISED -
	DRAWN -	REVISED -
PLOT SCALE = 2.0000 ' / in.	CHECKED -	REVISED -
PLOT DATE = 10/2/2019	DATE - 10/4/2019	REVISED -

STATE OF ILLINOIS
DEPARTMENT OF TRANSPORTATION

EXISTING STRUCTURAL PLANS
STRUCTURE NO. 050-0003/0004

SCALE: SHEET 1 OF 10 SHEETS STA. TO STA.

F.A.I RTE.	SECTION	COUNTY	TOTAL SHEETS	SHEET NO.
80	50-2(HB-2)BDR(HB-1)BR(BR)BR-1	LASALLE	328	236

CONTRACT NO. 66H21

ILLINOIS FED. AID PROJECT

ROUTE NO.	SECTION	COUNTY	TOTAL SHEETS	SHEET NO.
F.A.I. 80	50-2HB-1	LA SALLE	65	51
STA.				

SHEET 1 OF 1

INDEX OF BRIDGE SHEETS - STA 627+23.50

1. GENERAL PLAN AND ELEVATION.
2. BORINGS, BILL OF MATERIAL, GENERAL NOTES, AND NAME PLATE.
3. DECK REINFORCEMENT PLAN.
4. WEST ABUTMENT, SOUTH BRIDGE.
5. WEST RETAINING WALL AND WEST ABUTMENT, NORTH BRIDGE.
6. EAST ABUTMENT, NORTH BRIDGE.
7. EAST RETAINING WALL AND EAST ABUTMENT, SOUTH BRIDGE.
8. ABUTMENT AND RETAINING WALL SECTIONS.
9. PILE LOCATION PLAN.
10. REINFORCEMENT BAR LIST.

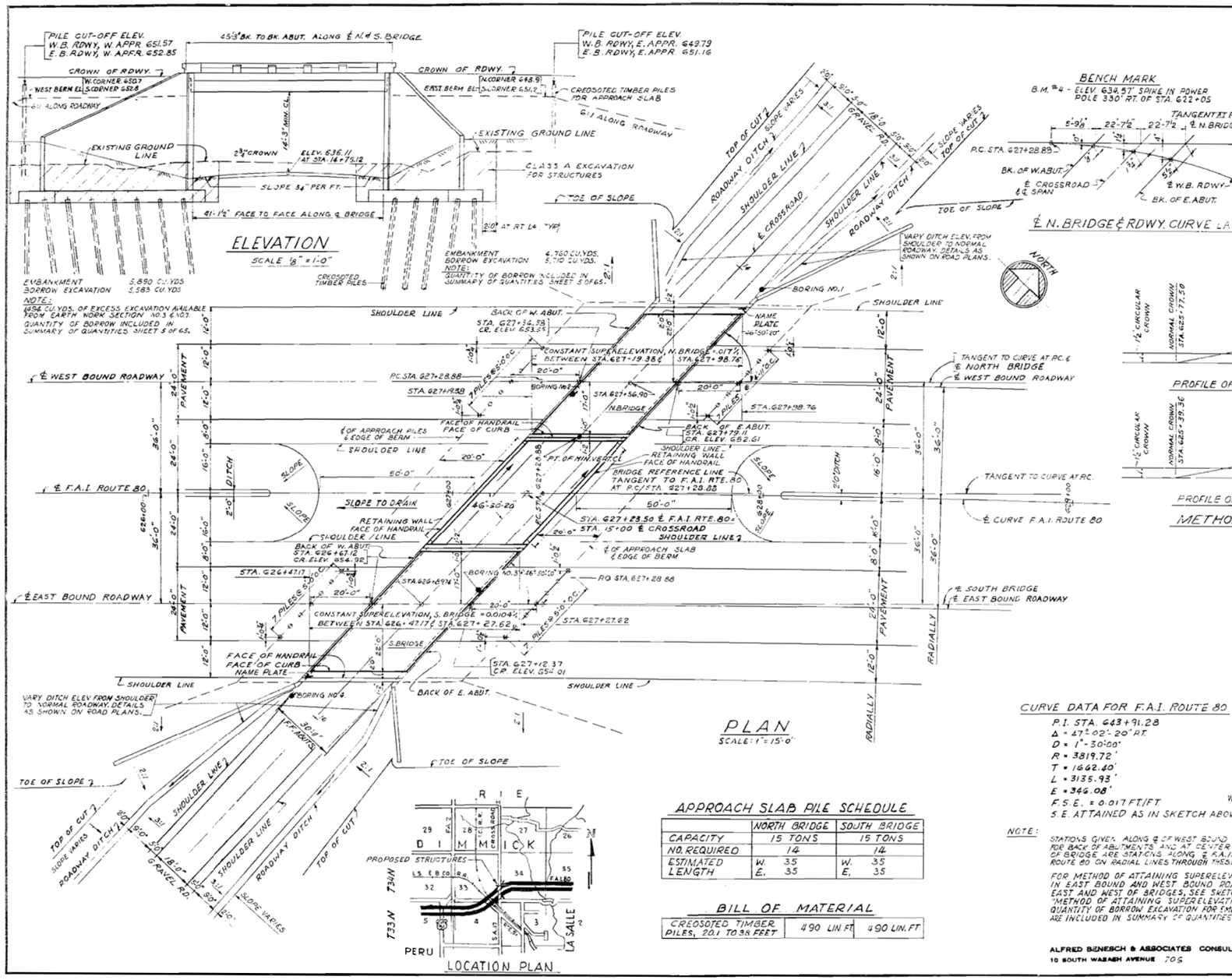

℄ N. BRIDGE & ℄ RDWY. CURVE LAYOUT

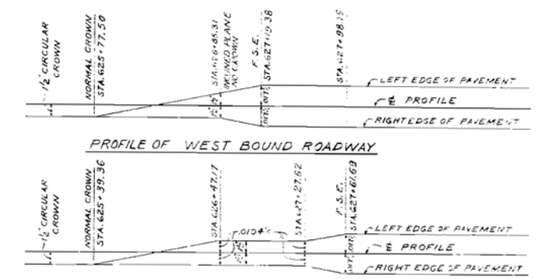

METHOD OF ATTAINING SUPERELEVATION

ROAD CLASSIFICATION

D.H.V.	TYPE	M.P.H
1965	T	70

DESIGN LOAD

I.L.M. E0-516-44 & ALTERNATE
SLAB DESIGNED IN ACCORDANCE WITH A.A.S.H.O. '76 (S9)
FUTURE D.L. ½" BIT. WEARING SURFACE.

DESIGN STRESSES

CONCRETE
f'_c = 3,500 LBS. PER SQ. IN.
f_c = 1,400 LBS. PER SQ. IN.
f_c = (WITH EARTH PRESSURE) 1,000 LBS. PER SQ. IN.
v_c = (FOOTING) 75 LBS. PER SQ. IN.
n = 10

REINFORCING STEEL
f_s = 20,000 LBS. PER SQ. IN.

PILE LOADS

WALLS = 20 TONS (TIMBER)
APPROACH SLAB = 5 TONS (TIMBER)

EARTH PRESSURE

ABUTMENTS = 30 LBS. PER SQ. FT.
WING WALLS & RETAINING WALLS = 40 LBS. PER SQ. FT.

CURVE DATA FOR F.A.I. ROUTE 80

P.I. STA. 643+91.28
Δ = 47° 02'-20" RT.
D = 1°-30'-00"
R = 3819.72'
T = 1662.40'
L = 3135.93'
E = 344.08'
F.S.E. = 0.017 FT./FT.
S.E. ATTAINED AS IN SKETCH ABOVE

NOTE:

STATIONS GIVEN ALONG ℄ OF WEST BOUND ROADWAY FOR BACK OF ABUTMENTS AND AT CENTER OF BRIDGE ARE STATIONS ALONG ℄ F.A.I. ROUTE 80 ON RADIAL LINES THROUGH THESE POINTS.

FOR METHOD OF ATTAINING SUPERELEVATION IN EAST BOUND AND WEST BOUND ROADWAYS EAST AND WEST OF BRIDGES, SEE SKETCH TITLED "METHOD OF ATTAINING SUPERELEVATION." QUANTITY OF BORROW EXCAVATION FOR EMBANKMENT ARE INCLUDED IN SUMMARY OF QUANTITIES SHEETS 5 OF 65.

APPROACH SLAB PILE SCHEDULE

	NORTH BRIDGE	SOUTH BRIDGE
CAPACITY	15 TONS	15 TONS
NO. REQUIRED	14	14
ESTIMATED LENGTH	W. 35 E. 35	W. 35 E. 35

BILL OF MATERIAL

CREOSOTED TIMBER PILES, 20.1 TO 38 FEET	490 LIN. FT.	490 LIN. FT.

ALFRED BENESCH & ASSOCIATES CONSULTING ENGINEERS
10 SOUTH WABASH AVENUE 706 CHICAGO, ILLINOIS

GENERAL PLAN AND ELEVATION
GRADE SEPARATION
F.A.I. ROUTE 80
OVER CROSS ROAD

F.A.I. ROUTE 80 SECTION 50-2-B-1
LA SALLE COUNTY
STATION 627+23.50

FOR INFORMATION ONLY

MODEL: Default
FILE NAME: \\QuiggProjects\2018\18L018 Various Structure IDOT D3 Farnsworth PTB 161-21\Work Order 14 - I-80 Roadway and other\CADD\CADD Sheets\Existing Bridge Plans\0288H21-sht-Existing

QUIGG ENGINEERING INC	USER NAME = mwilson	DESIGNED -	REVISED -
		DRAWN -	REVISED -
	PLOT SCALE = 2.0000 ' / in.	CHECKED -	REVISED -
	PLOT DATE = 10/2/2019	DATE - 10/4/2019	REVISED -

STATE OF ILLINOIS
DEPARTMENT OF TRANSPORTATION

EXISTING STRUCTURAL PLANS
STRUCTURE NO. 050-0003/0004

SCALE: | SHEET 2 OF 10 SHEETS | STA. | TO STA.

F.A.I RTE.	SECTION	COUNTY	TOTAL SHEETS	SHEET NO.
80	50-2(HB-2)BDR(HB-1)BR(BR)BR-1	LASALLE	328	237
		CONTRACT NO. 66H21		
		ILLINOIS FED. AID PROJECT		

ROUTE NO.	SECTION	COUNTY	TOTAL SHEETS	SHEET NO.
FAI.80	50-2(HB-2)BDR(HB-1)BR(BR)BR-1	LA SALLE	85	53
STA.	TO STA.			
B.P.R. REG NO. 4	ILLINOIS	PROJECT		

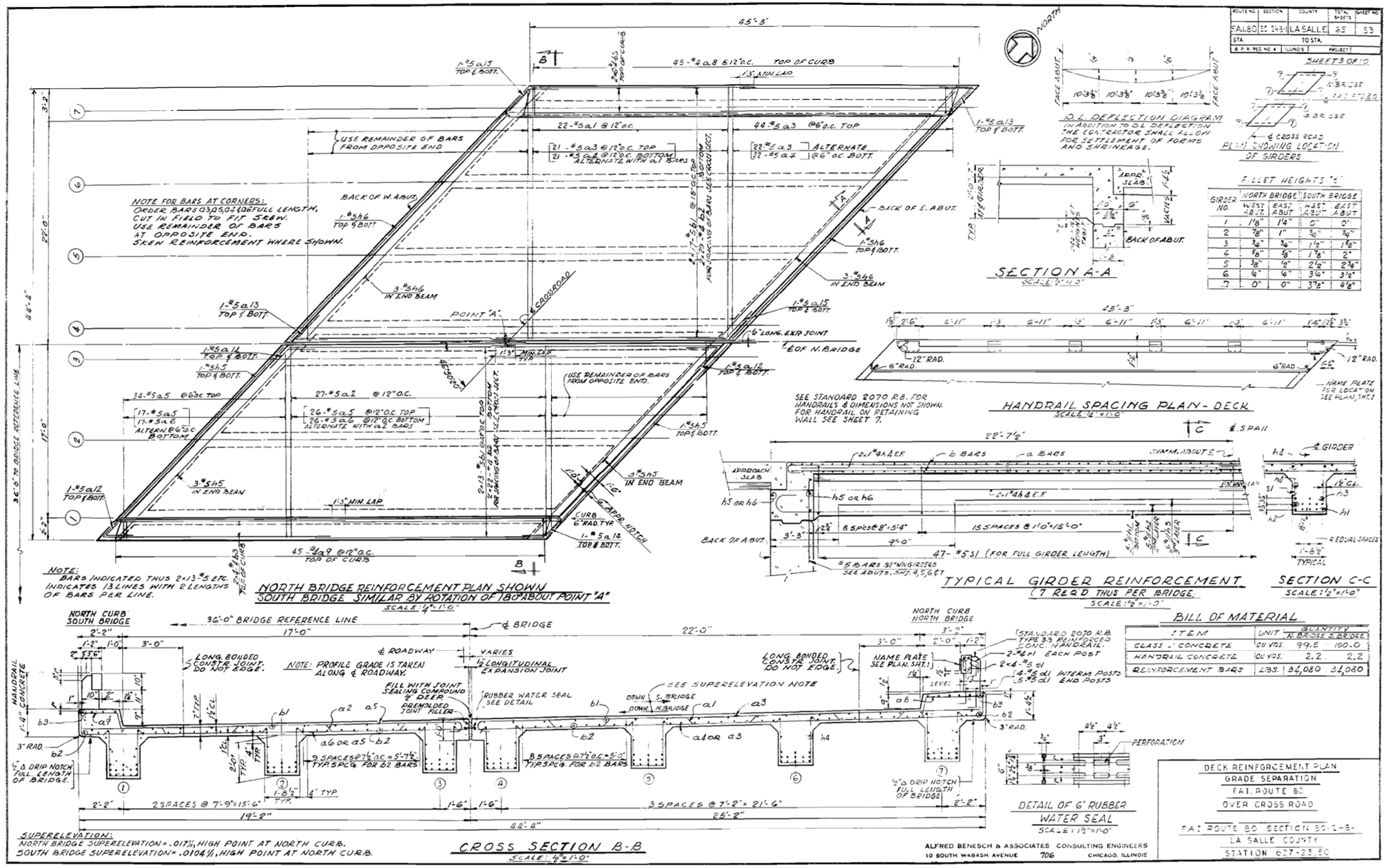

GIRDER NO.	NORTH BRIDGE WEST ABUT.	NORTH BRIDGE EAST ABUT.	SOUTH BRIDGE WEST ABUT.	SOUTH BRIDGE EAST ABUT.
1	1'8"	1'4"	0"	0"
2	7/8"	1"	3/4"	3/4"
3	3/4"	3/4"	1 1/2"	1 5/8"
4	5/8"	5/8"	1 7/8"	2"
5	3/8"	1/2"	2 1/2"	2 3/8"
6	1/4"	1/4"	3 1/4"	3 1/2"
7	0"	0"	3 7/8"	4 1/8"

ITEM	UNIT	QUANTITY N. BRIDGE	QUANTITY S. BRIDGE
CLASS "A" CONCRETE	CU. YDS.	99.5	100.0
HANDRAIL CONCRETE	CU. YDS.	2.2	2.2
REINFORCEMENT BARS	LBS.	34,080	34,080

FOR INFORMATION ONLY

QUIGG ENGINEERING INC	USER NAME = mwilson	DESIGNED -	REVISED -	STATE OF ILLINOIS DEPARTMENT OF TRANSPORTATION	EXISTING STRUCTURAL PLANS STRUCTURE NO. 050-0003/0004	F.A.I RTE. 80	SECTION 50-2(HB-2)BDR(HB-1)BR(BR)BR-1	COUNTY LASALLE	TOTAL SHEETS 328	SHEET NO. 238
		DRAWN -	REVISED -					CONTRACT NO. 66H21		
	PLOT SCALE = 2.0000 ' / in.	CHECKED -	REVISED -							
	PLOT DATE = 10/2/2019	DATE - 10/4/2019	REVISED -		SCALE: SHEET 3 OF 10 SHEETS STA. TO STA.		ILLINOIS FED. AID PROJECT			

MODEL: Default
FILE NAME: \\QuiggProjects2018\18L018 Various Structure IDOT D3 Farnsworth PTB 161-21\Work Order 14 - I-80 Roadway and other\CADD\CADD Sheets\Existing Bridge Plans\0366H21-int-Existing Bridge Plans 0228-0229-033.dgn

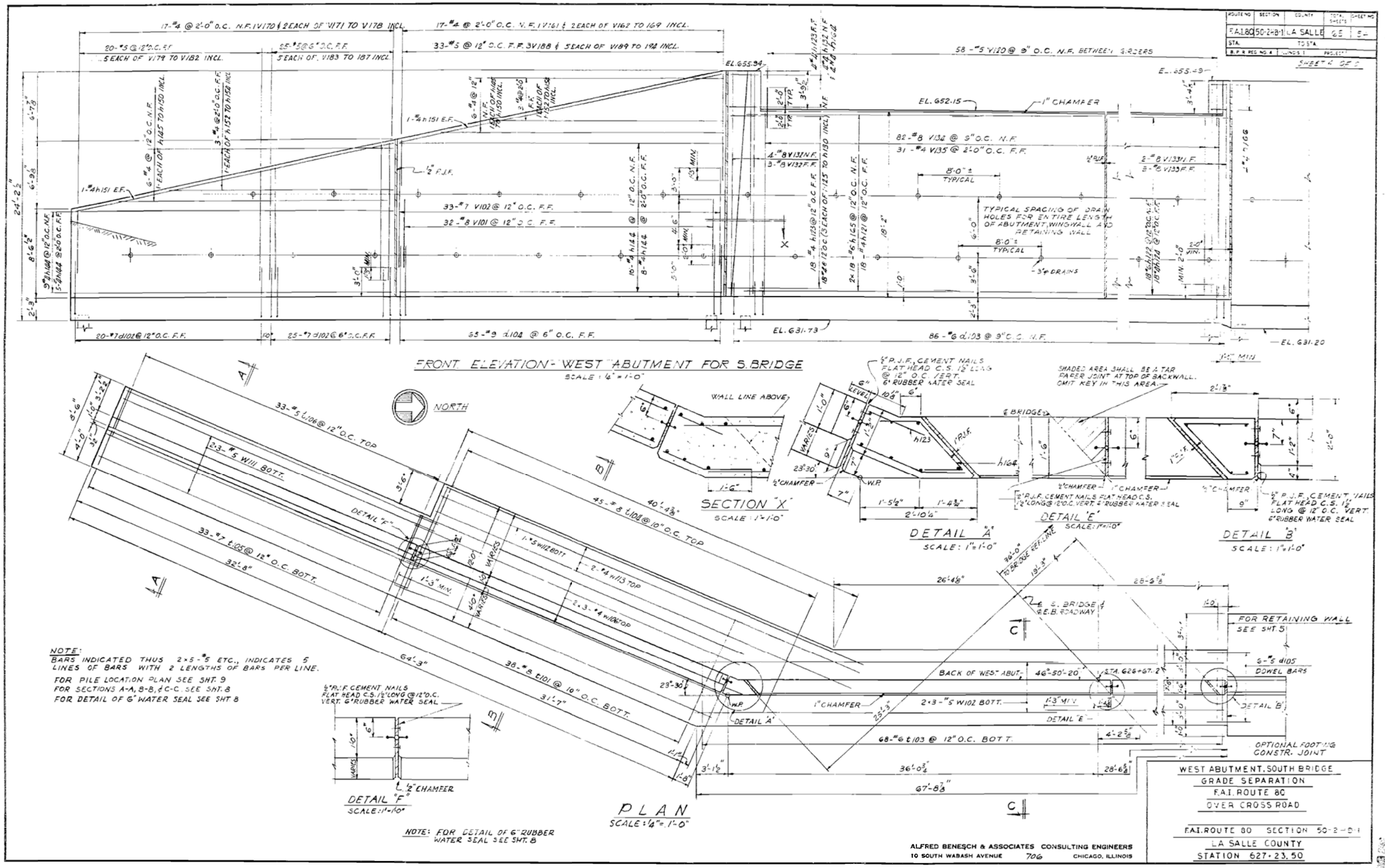

FOR INFORMATION ONLY

QUIGG ENGINEERING INC	USER NAME = mwilson	DESIGNED -	REVISED -	STATE OF ILLINOIS DEPARTMENT OF TRANSPORTATION	EXISTING STRUCTURAL PLANS STRUCTURE NO. 050-0003/0004	F.A.I. RTE.	SECTION	COUNTY	TOTAL SHEETS / SHEET NO.
		DRAWN -	REVISED -			80	50-2(HB-2)BDR(HB-1)BR(BR)BR-1	LASALLE	328 / 239
	PLOT SCALE = 2.0000 ' / in.	CHECKED -	REVISED -					CONTRACT NO. 66H21	
	PLOT DATE = 10/2/2019	DATE - 10/4/2019	REVISED -		SCALE: SHEET 4 OF 10 SHEETS STA. TO STA.		ILLINOIS FED. AID PROJECT		

MODEL: Default
FILE NAME: \\QuiggProjects\2018\18L018 Various Structure IDOT D3 Farnsworth PTB 161-21\Work Order 14 - I-80 Roadway and other\CADD\CADD Sheets\Existing Bridge Plans\0366H21-int-Existing Bridge Plans 0228-0229-034.dgn

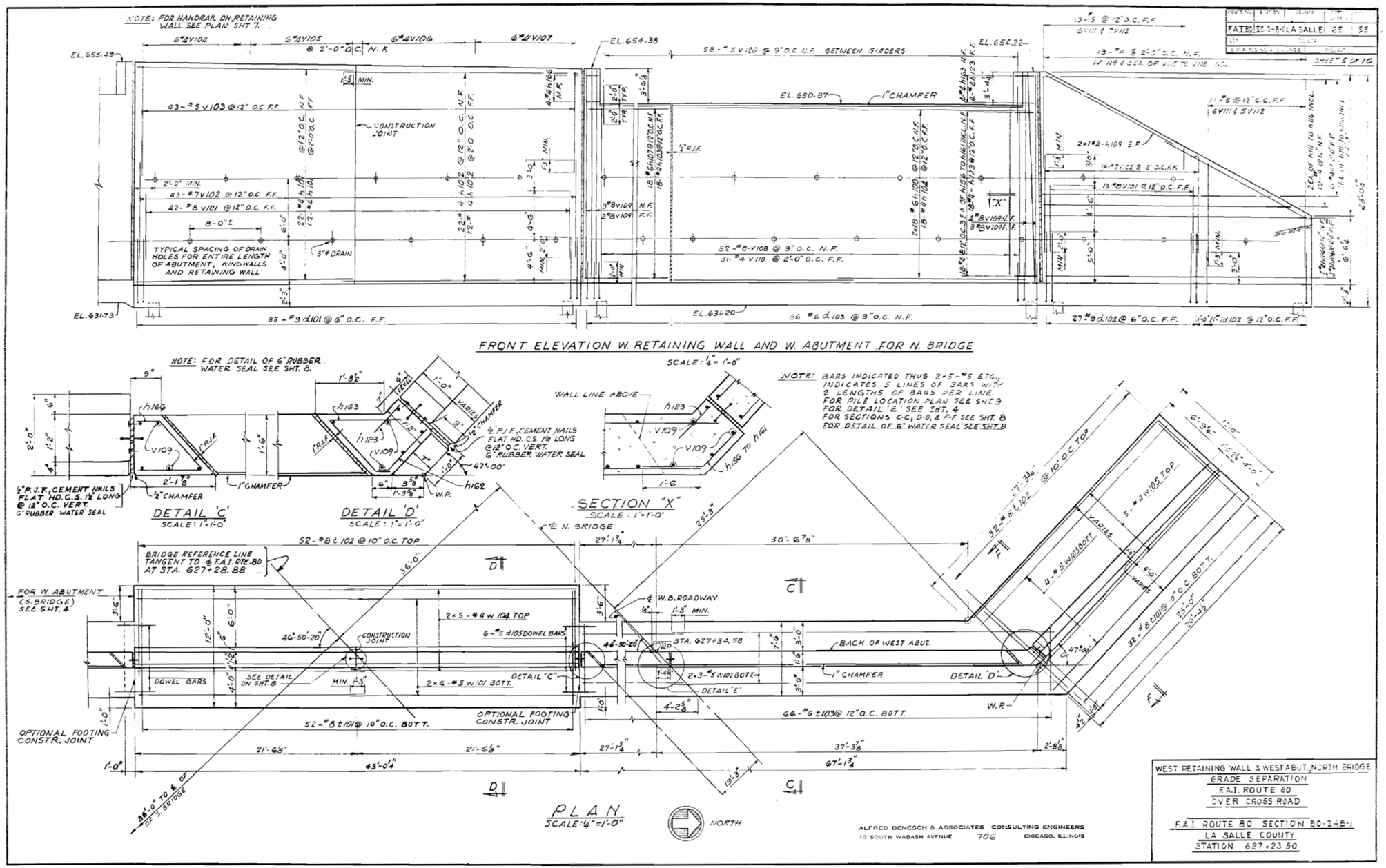

FOR INFORMATION ONLY

QUIGG ENGINEERING INC	USER NAME = mwilson	DESIGNED -	REVISED -	STATE OF ILLINOIS DEPARTMENT OF TRANSPORTATION	EXISTING STRUCTURAL PLANS STRUCTURE NO. 050-0003/0004	F.A.I. RTE. 80	SECTION 50-2(HB-2)BDR(HB-1)BR(BR)BR-1
		DRAWN -	REVISED -			COUNTY LASALLE	TOTAL SHEETS 328 / SHEET NO. 240
	PLOT SCALE = 2.0000 ' / in.	CHECKED -	REVISED -			CONTRACT NO. 66H21	
	PLOT DATE = 10/2/2019	DATE - 10/4/2019	REVISED -		SCALE: SHEET 5 OF 10 SHEETS STA. TO STA.	ILLINOIS FED. AID PROJECT	

MODEL: Default
FILE NAME: \\QuiggProjects\2018\18L018 Various Structure IDOT D3 Farnsworth PTB 161-21\Work Order 14 - I-80 Roadway and other\CADD\CADD Sheets\Existing Bridge Plans\0366H21-Int-Existing Bridge Plans 0228-0229-035.dgn

ROUTE NO.	SECTION	COUNTY	TOTAL SHEETS	SHEET NO.
FAI 80	50-2(HB-1)	LA SALLE	65	56
STA.		TO STA.		
B.F.P. REG NO. 4	ILLINOIS			

SHEET 5 OF 10

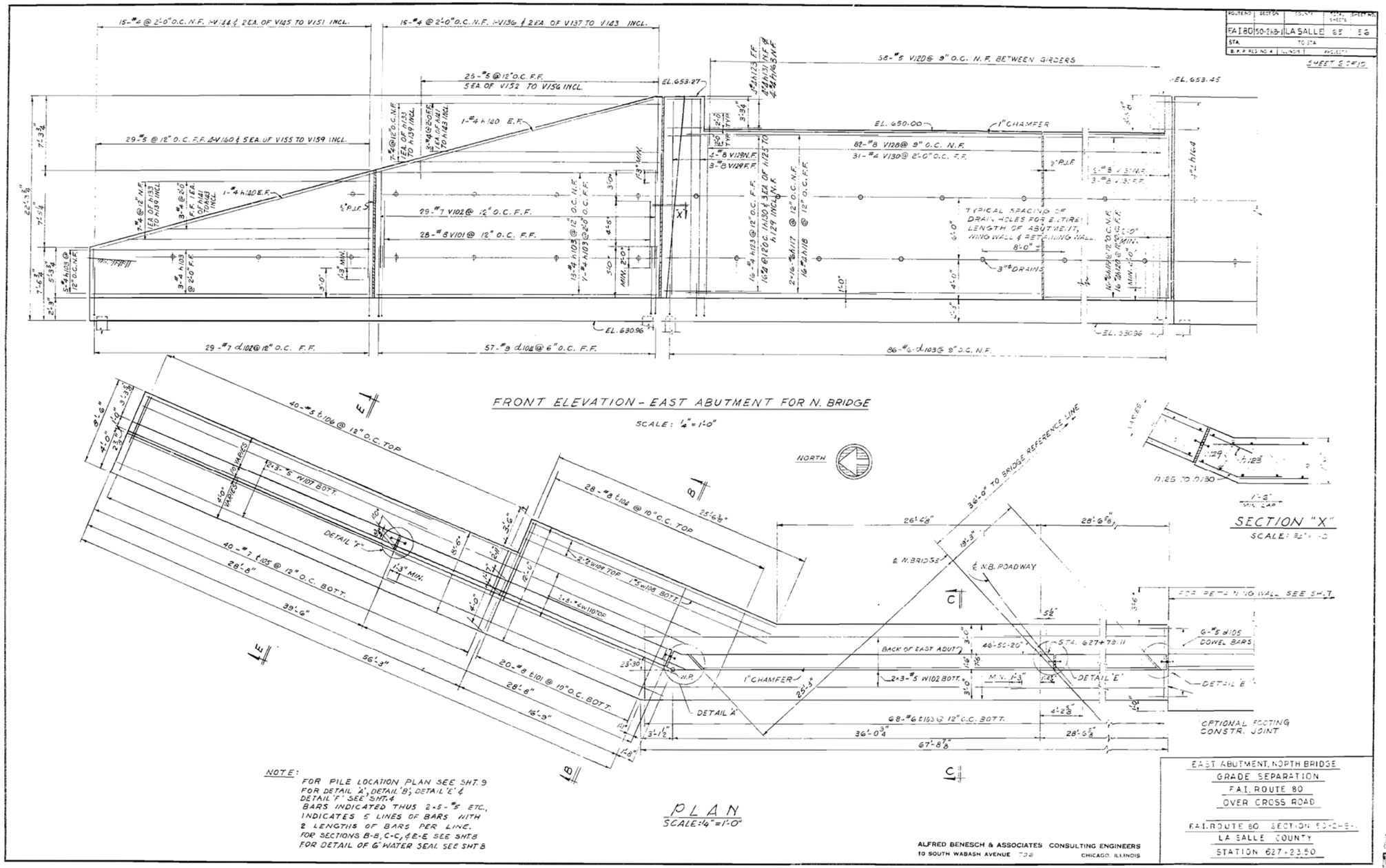

FOR INFORMATION ONLY

MODEL: Default
FILE NAME: \\QuiggProjects\2018\18L018 Various Structure IDOT D3 Farnsworth PTB 36-2-1\Work Order 14 - I-80 Roadway and other\CADD\CADD Sheets\Existing Bridge Plans\D366H21-sht-Existing Bridge Plans 0228-0229-036.dgn

QUIGG ENGINEERING INC

USER NAME = mwilson	DESIGNED -	REVISED -	
	DRAWN -	REVISED -	
PLOT SCALE = 2.0000 ' / in.	CHECKED -	REVISED -	
PLOT DATE = 10/2/2019	DATE - 10/4/2019	REVISED -	

STATE OF ILLINOIS
DEPARTMENT OF TRANSPORTATION

EXISTING STRUCTURAL PLANS
STRUCTURE NO. 050–0003/0004

SCALE: | SHEET 6 OF 10 SHEETS | STA. | TO STA.

F.A.I RTE.	SECTION	COUNTY	TOTAL SHEETS	SHEET NO.
80	50-2(HB-2)BDR(HB-1)BR(BR)BR-1	LASALLE	328	241
		CONTRACT NO. 66H21		
	ILLINOIS	FED. AID PROJECT		

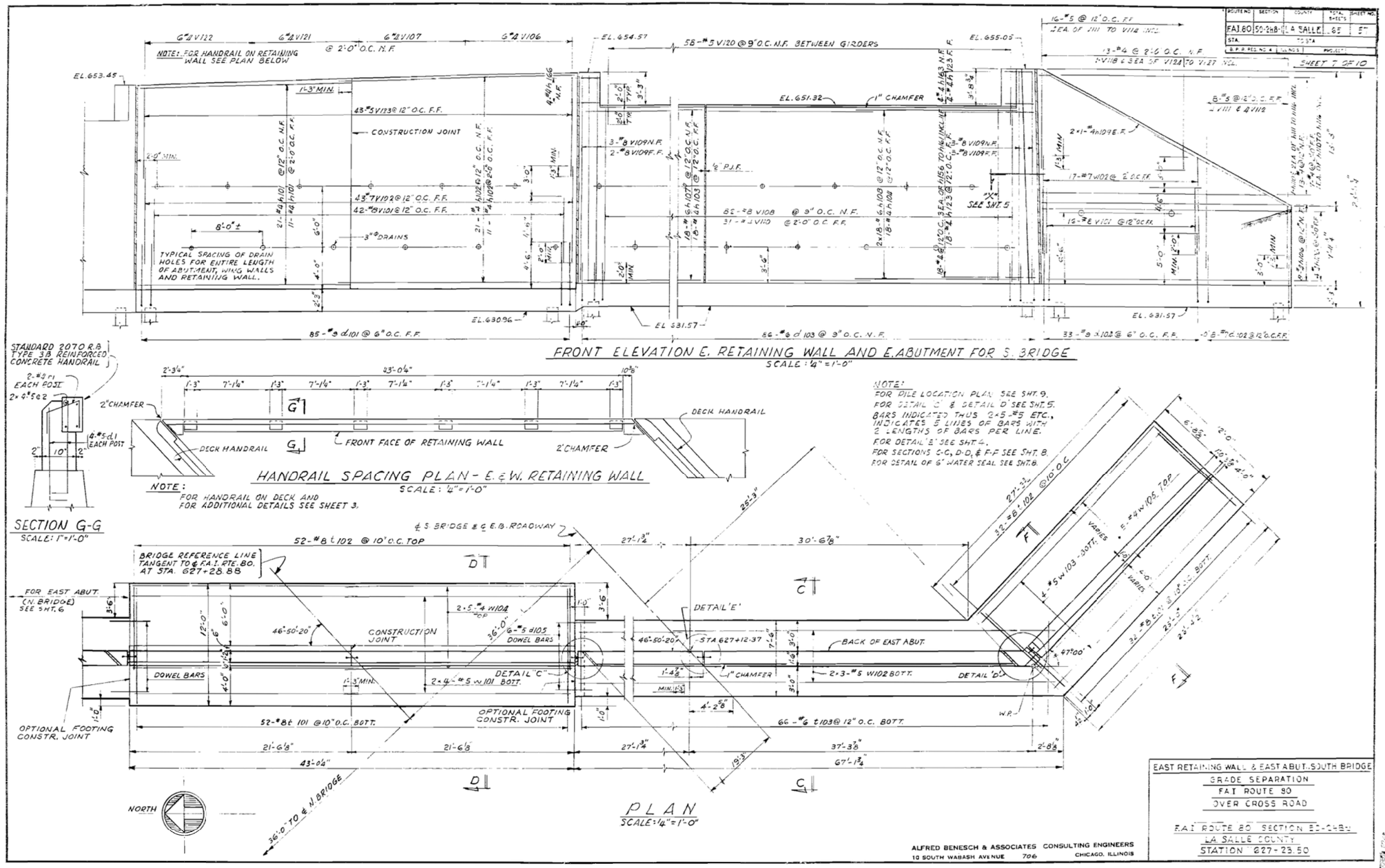

FOR INFORMATION ONLY

FAI RTE.	SECTION	COUNTY	TOTAL SHEETS	SHEET NO.
80	50-2(HB-2)BDR(HB-1)BR(BR)BR-1	LASALLE	328	242
		CONTRACT NO. 66H21		
		ILLINOIS	FED. AID PROJECT	

QUIGG ENGINEERING INC

USER NAME = mwilson	DESIGNED -	REVISED -	
	DRAWN -	REVISED -	
PLOT SCALE = 2.0000 ' / in.	CHECKED -	REVISED -	
PLOT DATE = 10/2/2019	DATE - 10/4/2019	REVISED -	

STATE OF ILLINOIS
DEPARTMENT OF TRANSPORTATION

EXISTING STRUCTURAL PLANS
STRUCTURE NO. 050-0003/0004

SCALE: SHEET 7 OF 10 SHEETS STA. TO STA.

MODEL: Default
FILE NAME: \\QuiggProjects\2018\18L018 Various Structure IDOT D3 Farnsworth PTB 161-2\Work Order 14 - I-80 Roadway and other\CADD\CADD Sheets\Existing Bridge Plans\0366H21-sht-Existing Bridge Plans 0228-0229-037.dgn

ROUTE NO.	SECTION	COUNTY	TOTAL SHEETS	SHEET NO.
FAI 80	50-2HB-1	LA SALLE	328	58
STA.		TO STA.		
B.F.P. REG NO. 4	ILLINOIS	PROJECT		

SHEET 8 OF 10

NOTE: FOR HANDRAIL ON RETAINING WALLS SEE SHT. 7

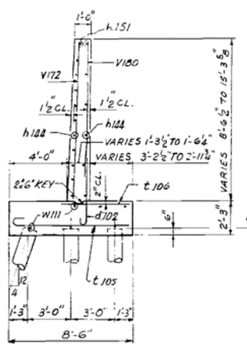

SECTION A-A
SCALE: ¼" = 1'-0"

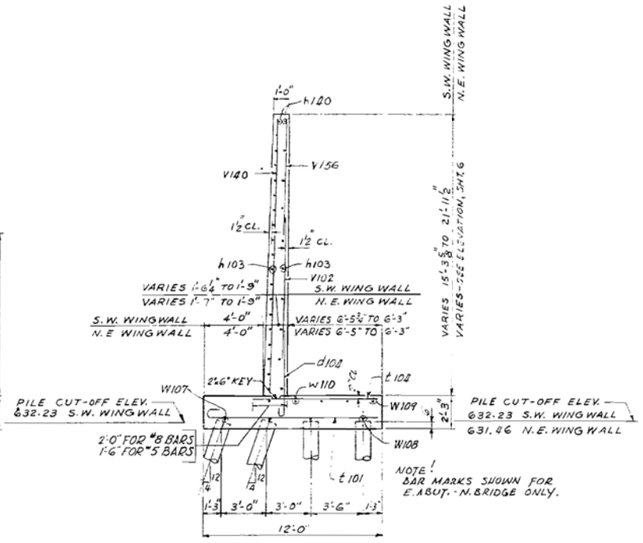

SECTION B-B
SCALE: ¼" = 1'-0"

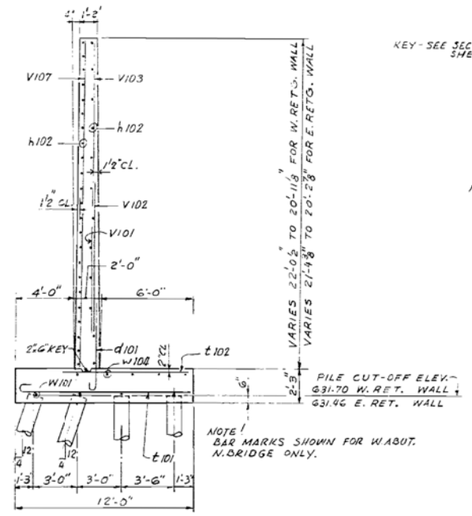

SECTION D-D
SCALE: ¼" = 1'-0"

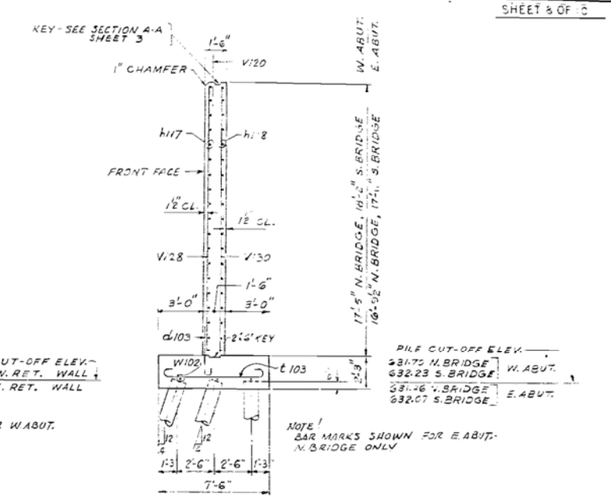

SECTION C-C
SCALE: ¼" = 1'-0"

BILL OF MATERIAL - SUBSTRUCTURE

ITEM	UNIT	NORTH BRIDGE WEST. ABUT. N.W. WING WEST. RET. WALL	NORTH BRIDGE EAST ABUT. N.E. WING	SOUTH BRIDGE WEST ABUT. S.W. WING	SOUTH BRIDGE EAST ABUT. S.E. WING EAST. RET. WALL	TOTAL
CLASS X CONCRETE	CU. YD.	240.3	181.0	209.1	239.-	669.6
REINFORCEMENT BARS	POUND	22,270	15,780	18,680	22,350	79,080
HANDRAIL CONCRETE	CU. YD.	1.0	—	—	1.0	2.0
CREOSOTED TIMBER PILES 20.1' TO 38'	LIN. FT.					12,066
TEST PILE (TIMBER)	EACH					2
CLASS A EXCAVATION	CU. YD.					1.502
METAL SHOES	EACH					431

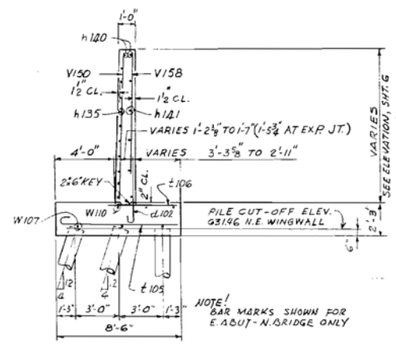

SECTION E-E
SCALE: ¼" = 1'-0"

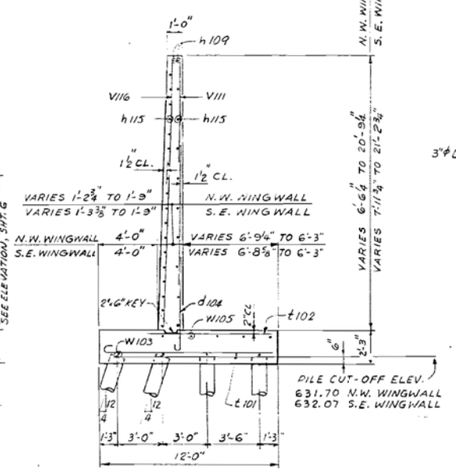

SECTION F-F
SCALE: ¼" = 1'-0"

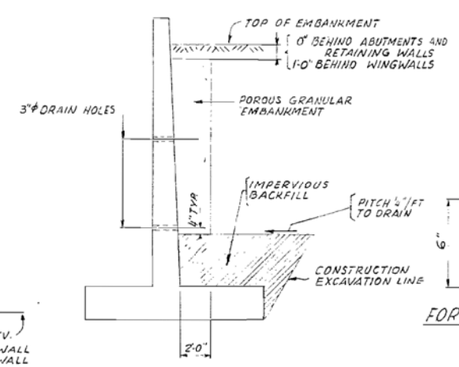

TYPICAL SECTION SHOWING BACKFILL FOR DRAINAGE

NOTE: QUANTITY OF POROUS GRANULAR EMBANKMENT IS INCLUDED IN QUANTITIES WITH ROAD PLANS. COST OF IMPERVIOUS BACKFILL SHALL BE INCLUDED IN CONTRACT UNIT PRICE FOR CLASS "A" EXCAVATION FOR STRUCTURES.

FOR EXP. JOINTS — FOR CONSTR. JOINTS

DETAIL OF 6" RUBBER WATER SEALS

SCALE: 3" = 1'-0"

NOTE: COST OF WATER SEAL INCIDENTAL TO THE CONTRACT UNIT PRICE PER CU. YD. OF CLASS X CONCRETE. SEE SPECIAL PROVISIONS.

ALFRED BENESCH & ASSOCIATES CONSULTING ENGINEERS
10 SOUTH WABASH AVENUE 706 CHICAGO, ILLINOIS

ABUTMENT AND RETAINING WALL SECTIONS
GRADE SEPARATION
F.A.I. ROUTE 80
OVER CROSS ROAD

F.A.I. ROUTE 80 SECTION 50-2HB-1
LA SALLE COUNTY
STATION 627+23.50

FOR INFORMATION ONLY

MODEL: Default
FILE NAME: \\QuiggProjects\2018\18L018 Various Structure IDOT D3 Farnsworth PTB 161-21\Work Order 14 - I-80 Roadway and other\CADD\CADD Sheets\Existing Bridge Plans\D366H21-sht-Existing Bridge Plans 0228-0229-038.dgn

QUIGG ENGINEERING INC

USER NAME = mwilson	DESIGNED -	REVISED -	
	DRAWN -	REVISED -	
PLOT SCALE = 2.0000 ' / in.	CHECKED -	REVISED -	
PLOT DATE = 10/2/2019	DATE - 10/4/2019	REVISED -	

STATE OF ILLINOIS
DEPARTMENT OF TRANSPORTATION

EXISTING STRUCTURAL PLANS
STRUCTURE NO. 050-0003/0004

SCALE: | SHEET 8 OF 10 SHEETS | STA. | TO STA.

F.A.I. RTE.	SECTION	COUNTY	TOTAL SHEETS	SHEET NO.
80	50-2(HB-2)BDR(HB-1)BR(BR)BR-1	LASALLE	328	243
		CONTRACT NO. 66H21		
		ILLINOIS	FED. AID PROJECT	

SECTION	COUNTY	TOTAL SHEETS	SHEET NO.
F.A.I. 80 (50-2HB-1)	LA SALLE	65	59
STA.	TO STA.		
B.P.R. REG. NO. 4	ILLINOIS	PROJECT	

SHEET 9 OF 10

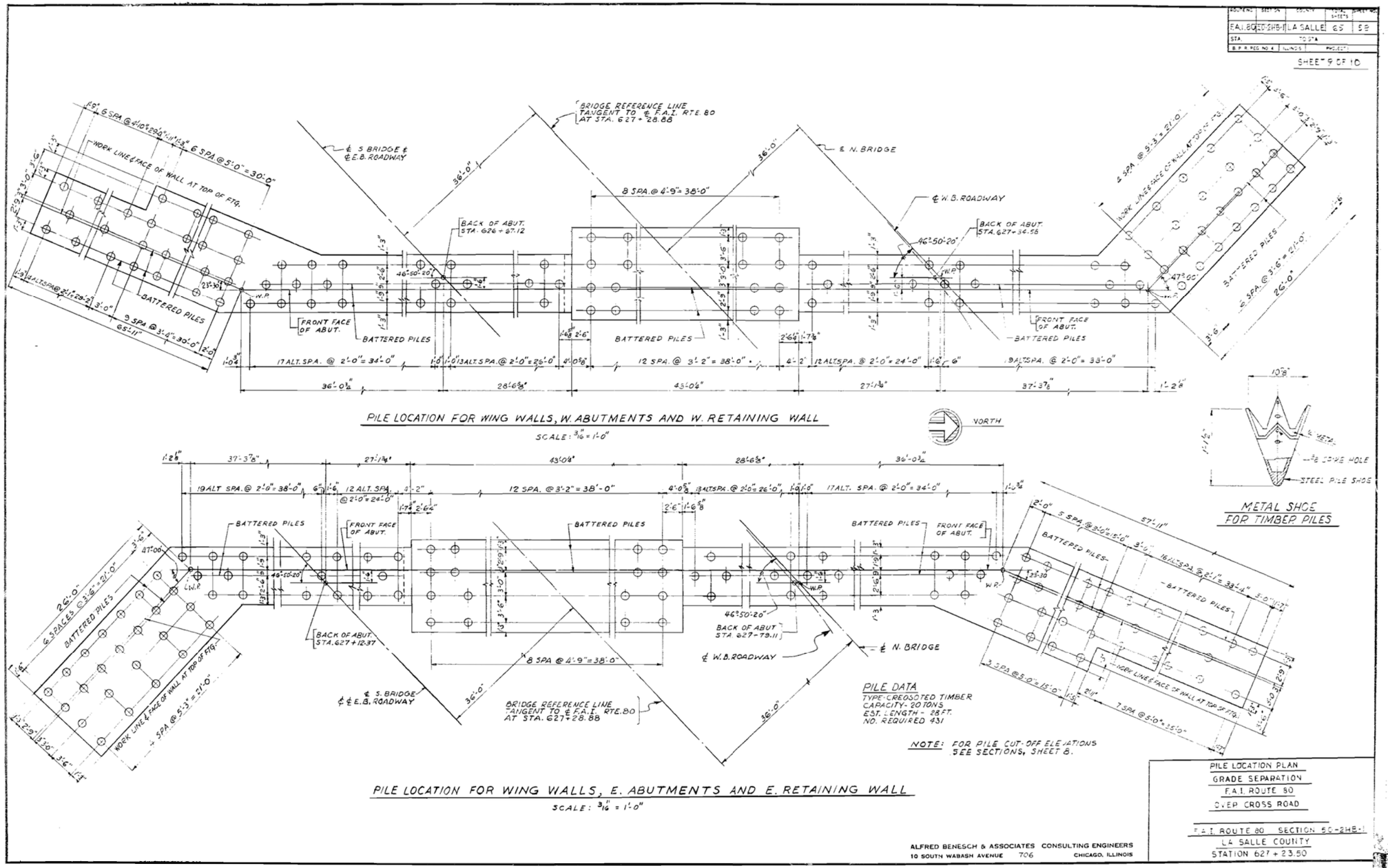

PILE LOCATION PLAN
GRADE SEPARATION
F.A.I. ROUTE 80
OVER CROSS ROAD

F.A.I. ROUTE 80 SECTION 50-2HB-1
LA SALLE COUNTY
STATION 627 + 23.50

ALFRED BENESCH & ASSOCIATES CONSULTING ENGINEERS
10 SOUTH WABASH AVENUE 706 CHICAGO, ILLINOIS

FOR INFORMATION ONLY

MODEL: Default
FILE NAME: \\QuiggProjects\2018\18L018 Various Structure IDOT D3 Farnsworth PTB 161-21\Work Order 14 - I-80 Roadway and other\CADD\CADD Sheets\Existing Bridge Plans\0366H21-sht-Existing Bridge Plans 0228-0229-039.dgn

QUIGG ENGINEERING INC

USER NAME = mwilson	DESIGNED -	REVISED -	
	DRAWN -	REVISED -	
PLOT SCALE = 2.0000 ' / in.	CHECKED -	REVISED -	
PLOT DATE = 10/2/2019	DATE - 10/4/2019	REVISED -	

STATE OF ILLINOIS
DEPARTMENT OF TRANSPORTATION

EXISTING STRUCTURAL PLANS
STRUCTURE NO. 050–0003/0004

SCALE: | SHEET 9 OF 10 SHEETS | STA. | TO STA.

F.A.I RTE.	SECTION	COUNTY	TOTAL SHEETS	SHEET NO.
80	50-2(HB-2)BDR(HB-1)BR(BR)BR-1	LASALLE	328	244
		CONTRACT NO. 66H21		
	ILLINOIS	FED. AID PROJECT		

REINFORCEMENT BAR LISTS

SHEET 10 OF 10

ROUTE NO.	SECTION	COUNTY	TOTAL SHEETS	SHEET NO.
FA I 80	50-2HB	LA SALLE	65	60
STA.	TO STA.			
B.F.R. REG. NO. 4	NUMBERS	PROJECT		

SUPERSTRUCTURE

NO. REQUIRED DECKS NORTH	NO. REQUIRED DECKS SOUTH	SIZE	LENGTH	MARK	TYPE	A	B	C	D	E	F	G	H	K	J
			STRAIGHT												
35	35	#11	38'-9"	h2											
21	21	#11	27'-3"	h3											
87	87	#5	24'-8"	a3											
77	77	#5	18'-8"	a5											
16	16	#5	23'-0"	e1											
10	10	#5	34'-0"	h6											
10	10	#5	25'-9"	h5											
102	102	#4	22'-6"	b2											
56	56	#4	22'-6"	h4											
20	20	#4	23'-0"	b3											
			BENT												
35	35	#11	47'-11"	b1	1	1'-7"	44.9						1'-7"		1'-2"
22	22	#5	26'-0"	a1	SEE DETAIL										
27	27	#5	19'-9"	a2	SEE DETAIL										
43	43	#5	25'-9"	a4	2	1'-0"	24.9								
23	43	#5	19'-9"	a6	2	1'-0"	18.9								
52	52	#5	2'-9"	d1	2	6"	2'-3"								
4	4	#5	3'-3"	a12	52	1'-9"	1'-6"						1'-0½"	1'-1½"	
4	4	#5	4'-3"	a13	52	2'-9"	1'-6"						1'-0½"	1'-1½"	
4	4	#5	3'-3"	a14	3		1'-6"	1'-9"					1'-1½"	1'-0½"	
4	4	#5	4'-3"	a15	3		1'-6"	2'-9"					1'-1½"	1'-0½"	
60	60	#5	23'-3"	b1	1	7"	22.8								5"
329	329	#5	7'-0"	s1	s1	6"	2'-3"	1'-5½"	2'-3"				6½"		
45	45	#4	3'-9"	a8	3		2'-9"	1'-0"					1'-0"	2"	
45	45	#4	2'-9"	a9	3		1'-9"	1'-0"					1'-0"	2"	
24	24	#4	2'-3"	r1	52	10"	10"	7"					4"	9½"	

ABUTMENTS & RETAINING WALLS

NO. REQUIRED NORTH BRIDGE E.	NORTH BRIDGE W.	SOUTH BRIDGE E.	SOUTH BRIDGE W.	SIZE	LENGTH	MARK
				STRAIGHT		
	82	82		#8	7'-9"	s102
25			45	#8	8'-3"	s104
26	55	58	32	#8	6'-6"	W101
	82	82		#8	17'-3"	W108
	12	11		#8	20'-6"	W109
82				#8	16'-7"	W128
7				#8	19'-10"	W129
5				#8	20'-1"	W131
			7	#8	21'-9"	W132
			5	#8	21'-4"	W133
			82	#8	18'-0"	W134
29	57	60	33	#7	9'-6"	W102
	18	18		#6	28'-3"	h107
	36	36		#6	18'-6"	h108
32				#6	19'-6"	h117
16				#6	27'-0"	h119
			18	#6	26'-9"	h122
			36	#6	19'-3"	h165
6	6	6	6	#5	4'-0"	d105
40			33	#5	4'-6"	t106
	43			#5	11'-0"	W103
	12	8		#5	10'-0"	W111
	12	8		#5	6'-6"	W112
		4		#5	5'-0"	W113
		4		#5	3'-6"	W114
58	58	58	58	#5	4'-0"	W120
		43		#5	10'-6"	W123
5				#5	4'-1"	W152
5				#5	8'-9"	W153
5				#5	7'-3"	W154
10				#5	6'-3"	W155
10				#5	5'-3"	W156
5				#5	8'-3"	W157
5				#5	9'-6"	W158
5				#5	10'-9"	W159
4				#5	4'-2"	W160
			5	#5	7'-9"	W179
			5	#5	8'-6"	W180
			5	#5	9'-9"	W181
			5	#5	10'-9"	W182
			5	#5	11'-3"	W183
			5	#5	11'-9"	W184
			5	#5	12'-6"	W185
			5	#5	13'-0"	W186
			5	#5	13'-6"	W187
			3	#5	4'-9"	W188
			5	#5	5'-9"	W189
			5	#5	6'-9"	W190

NO. REQUIRED NORTH BRIDGE E.	NORTH BRIDGE W.	SOUTH BRIDGE E.	SOUTH BRIDGE W.	SIZE	LENGTH	MARK
				STRAIGHT CONT'D		
			5	#5	7'-10"	W191
			5	#5	8'-9"	W192
			5	#5	9'-10"	W193
			5	#5	10'-10"	W194
		8	8	#5	22'-0"	W101
	6	6	6	#5	34'-6"	W102
	4	4		#5	26'-3"	W103
6				#5	24'-9"	W107
1				#5	25'-3"	W108
			6	#5	33'-3"	W111
			1	#5	43'-0"	W112
		34	32	#4	21'-0"	h101
		34	32	#4	22'-9"	h102
28		18	18	#4	28'-3"	h103
		18	18	#4	35'-9"	h104
		11	12	#4	24'-8"	h106
		4	4	#4	15'-0"	h109
		4	2	#4	1'-3"	h110
		3	3	#4	8'-10"	h111
		3	3	#4	8'-0"	h112
		3	3	#4	11'-6"	h113
		3	3	#4	14'-9"	h114
		3	3	#4	18'-3"	h115
		3	3	#4	21'-9"	h116
16				#4	36'-9"	h118
16				#4	27'-0"	h120
			18	#4	37'-0"	h121
20	22	22	22	#4	1'-6"	h123
			18	#4	26'-9"	h124
2				#4	3'-6"	h133
2				#4	7'-3"	h134
2				#4	11'-0"	h135
2				#4	14'-9"	h136
2				#4	18'-6"	h137
2				#4	22'-3"	h138
2				#4	26'-0"	h139
4				#4	29'-3"	h140
2				#4	5'-11"	h141
2				#4	13'-11"	h142
2				#4	21'-11"	h143
			38	#4	32'-3"	h144
			2	#4	27'-3"	h145
			2	#4	27'-3"	h146
			2	#4	17'-6"	h147
			2	#4	13'-0"	h148
			2	#4	8'-0"	h149
			2	#4	3'-3"	h150
			4	#4	33'-0"	h151
			2	#4	5'-6"	h152

ABUTMENTS & RETAINING WALLS CONT'D

NO. REQUIRED NORTH BRIDGE E.	NORTH BRIDGE W.	SOUTH BRIDGE E.	SOUTH BRIDGE W.	SIZE	LENGTH	MARK
				STRAIGHT CONT'D		
		2	2	#4	15'-3"	h153
		2	2	#4	25'-6"	h154
	6			#4	21'-10"	W104
	6			#4	21'-6"	W105
	6	6		#4	21'-2"	W106
	6	6		#4	20'-10"	W107
	31	31		#4	17'-3"	W110
	3			#4	17'-9"	W115
	3			#4	14'-6"	W116
	3			#4	11'-0"	W117
	3	1		#4	7'-9"	W118
	1			#4	6'-3"	W119
		6		#4	20'-5"	W121
		6		#4	20'-1"	W122
		3		#4	18'-6"	W124
		3		#4	15'-3"	W125
		3		#4	12'-3"	W126
		3		#4	9'-0"	W127
	31			#4	16'-7"	W130
			31	#4	18'-0"	W135
	1			#4	19'-6"	W136
	2			#4	18'-6"	W137
	2			#4	17'-6"	W138
	2			#4	16'-6"	W139
	2			#4	15'-6"	W140
	2			#4	14'-6"	W141
	2			#4	13'-6"	W142
	2			#4	12'-6"	W143
	1			#4	12'-0"	W144
	2			#4	11'-3"	W145
RAILING						
	8	8		#5	24'-0"	e2

NO. REQUIRED NORTH BRIDGE E.	NORTH BRIDGE W.	SOUTH BRIDGE E.	SOUTH BRIDGE W.	SIZE	LENGTH	MARK
				STRAIGHT CONT'D		
		2		#4	10'-3"	W146
		2		#4	9'-3"	W147
		2		#4	8'-3"	W148
		2		#4	7'-3"	W149
		2		#4	6'-4"	W150
		2		#4	5'-3"	W151
			1	#4	27'-5"	W161
			2	#4	21'-0"	W162
			2	#4	20'-0"	W163
			2	#4	19'-3"	W164
			2	#4	18'-3"	W165
			2	#4	17'-7"	W166
			2	#4	16'-9"	W167
			2	#4	16'-0"	W168
			2	#4	15'-3"	W169
			1	#4	14'-9"	W170
			2	#4	14'-3"	W171
			2	#4	13'-3"	W172
			2	#4	12'-7"	W173
			2	#4	11'-6"	W174
			2	#4	10'-9"	W175
			2	#4	10'-1"	W176
			2	#4	9'-4"	W177
			2	#4	5'-6"	W178
		10	10	#4	22'-0"	W104
		5	5	#4	26'-3"	W105
			6	#4	33'-0"	W106
		2		#4	25'-3"	W109
		6		#4	29'-9"	W110
			2	#4	43'-0"	W113

NO. REQUIRED NORTH BRIDGE E.	NORTH BRIDGE W.	SOUTH BRIDGE E.	SOUTH BRIDGE W.	SIZE	LENGTH	MARK	TYPE	A	B	C	D	E	F	G	H	K	J
				BENT													
	85	85		#9	7'-6"	d101	1	1'-3"	6'-3"								1'-4"
57	27	33	65	#9	8'-0"	d104	1	1'-3"	6'-9"								1'-4"
20	84	84	38	#8	12'-7"	t101	1	1'-1"	11'-6"								10"
29	11	8	45	#7	5'-7"	d102	1	10"	11'-9"								7"
40			33	#7	8'-10"	t105	1	10"	8'-0"								7"
86	86	86	86	#6	4'-5"	d103	1	8"	3'-9"								6"
68	66	66	68	#6	8'-4"	t103	1	8"	7'-0"					8"			6"
3			3	#4	2'-0"	h125	3			6"	1'-6"					2½"	5½"
3			3	#4	2'-3"	h126	3			8½"	1'-6½"					3½"	7¾"
3			3	#4	2'-5"	h127	3			11"	1'-6"					4½"	10"
3			3	#4	2'-8"	h128	3			1'-1½"	1'-6½"					5½"	1'-0¼"
3			3	#4	2'-10"	h129	3			1'-3½"	1'-6½"					6½"	1'-2¼"
1			3	#4	3'-0"	h130	3			1'-6"	1'-6"					7½"	1'-4¼"
4				#4	2'-10"	h131	3			1'-7"	1'-3"					7½"	1'-5½"
			4	#4	2'-11"	h132	3			1'-8"	1'-3"					8"	1'-6½"
	3	3		#4	2'-4"	h156	3			10"	1'-6"					6¾"	7¼"
	3	3		#4	2'-5"	h157	3			11"	1'-6"					7½"	8"
	3	3		#4	2'-6"	h158	3			1'-0"	1'-6"					8¼"	8¾"
	3	3		#4	2'-7"	h159	3			1'-1"	1'-6"					9"	9½"
	3	3		#4	2'-8"	h160	3			1'-2"	1'-6"					9½"	10¼"
	3	3		#4	2'-9"	h161	3			1'-3"	1'-6"					10¼"	11"
	4	4		#4	1'-7"	h162	3			1'-4"	3"					11"	11¾"
	4	4		#4	3'-11"	h163	52	4"	1'-9"	1'-10"						1'-2"	1'-3"
4			4	#4	3'-11"	h164	52	1'-0"	1'-9"	1'-2"						1'-2"	1'-3"
4	4	4	4	#4	3'-10"	h166	52	6"	1'-9"	1'-7"							
RAILING																	
24	24			#5	2'-9"	d1	2	6"	2'-3"								
12	12			#4	1'-9"	r1	52	10"	7"	10"						4"	9½"

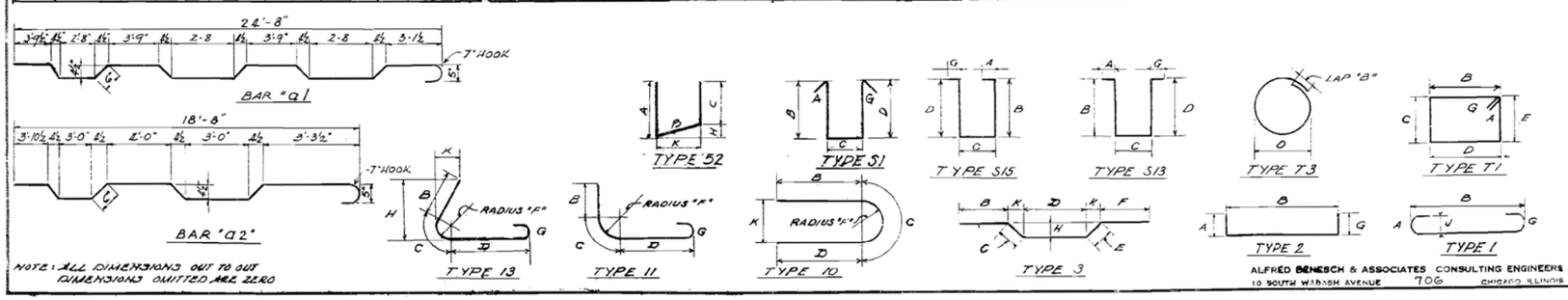

ALFRED BENESCH & ASSOCIATES CONSULTING ENGINEERS
10 SOUTH WABASH AVENUE 706 CHICAGO ILLINOIS

BAR REINFORCEMENT LISTS
GRADE SEPARATION
F.A.I. ROUTE 80
OVER CROSS ROAD

F.A.I. ROUTE 80 SECTION 50-2HB-1
LA SALLE COUNTY
STATION 627+23.50

FOR INFORMATION ONLY

MODEL: Default
FILE NAME: \\QuiggProjects\2018\18L018 Various Structure IDOT D3 Farnsworth PTB 161-2 \Work Order 14 - I-80 Roadway and other\CADD\CADD Sheets\Existing Bridge Plans\0366\02-int-Existing Bridge Plans 0228-0229-040.dgn

QUIGG ENGINEERING INC

USER NAME = mwilson	DESIGNED -	REVISED -
	DRAWN -	REVISED -
PLOT SCALE = 2.0000 ' / in.	CHECKED -	REVISED -
PLOT DATE = 10/2/2019	DATE - 10/4/2019	REVISED -

STATE OF ILLINOIS
DEPARTMENT OF TRANSPORTATION

EXISTING STRUCTURAL PLANS
STRUCTURE NO. 050-0003/0004

SCALE: SHEET 10 OF 10 SHEETS STA. TO STA.

F.A.I RTE.	SECTION	COUNTY	TOTAL SHEETS	SHEET NO.
80	50-2(HB-2)BDR(HB-1)BR(BR)BR-1	LASALLE	328	245
		CONTRACT NO. 66H21		
	ILLINOIS	FED. AID PROJECT		

F.A.I. RTE.	SECTION	COUNTY	TOTAL SHEETS	SHEET NO.
80	*	LASALLE	196	94

F.A.R.A. REG. | ILLINOIS PROJECT

* (50-2) HBR-1, HB-2, BR

D-93-098-92

P-93-021-90

STATE OF ILLINOIS
DEPARTMENT OF TRANSPORTATION
DIVISIONS OF HIGHWAYS
PLANS FOR PROPOSED
FEDERAL AID HIGHWAY
F.A.I. ROUTE 80
SECTION (50-2) HBR-1
LASALLE COUNTY

PLAN	1 INCH = 50 FEET
PROFILE HORIZ.	1 INCH = 50 FEET
PROFILE VERT.	1 INCH = 5 FEET
CROSS SECTION HORIZ.	1 INCH = 10 FEET
CROSS SECTION VERT.	1 INCH = 5 FEET

N

SECTION (50-2)HBR-1
INCLUDES THE REHABILITATION OF TWO EXISTING PARALLEL REINFORCED CONCRETE GIRDER BRIDGES, CONSISTING OF ONE SPAN 45'-3" ON RC CLOSED ABUTMENTS AND RETAINING WALLS CARRYING FAI ROUTE 80 OVER TOWNSHIP ROAD 50 AT STATION 627+23.50

CROSSOVER LOCATION

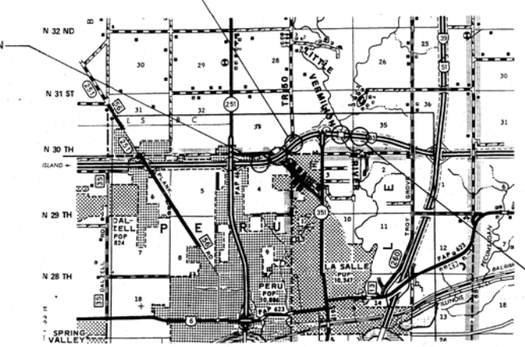

CROSSOVER LOCATION

LOCATION MAP
SCALE: 1" = 1 MILE
0 1 2 3

LOCATION OF SECTION INDICATED THUS: -■-

1994 A.D.T. 20700
P.V. = 60.6 % S.U. = 4.0 % M.U. = 35.4 %
DESIGN DESIGNATION : INTERSTATE

MICROFILMED _____
REEL NUMBER _____
AWARDED _____
RESIDENT ENGINEER _____
AS BUILT CHANGES WERE MADE
ON THE FOLLOWING SHEETS _____

JULIE 1-800-892-0123

DISTRICT 3 NO. (815) 434-6131

SECTION (50-2)HBR-1, HB-2
PROJECT ENGINEER: WAYNE ALDRICH
UNIT CHIEF: MIKE PUBENTZ

TOWNSHIPS: DIMMICK

SCALE IN FEET
0 50 100
0 5 10
0 10 20

FULL SIZED PLANS HAVE BEEN PREPARED USING STANDARD ENGINEERING SCALE. REDUCED SIZED WILL NOT CONFORM TO STANDARD SCALES. IN MAKING MEASUREMENTS ON REDUCED PLANS, THE ABOVE SCALES MAY BE USED.

LASALLE COUNTY SECTION: (50-2) HBR-1, HB-2, BR ROUTE: F.A.I. ROUTE 80

FOR INFORMATION ONLY

MODEL: Default
FILE NAME: \\QuiggProjects\2018\18L018 Various Structure IDOT D3 Farnsworth PTB 161-21\Work Order 14 - I-80 Roadway and other\CADD\CADD Sheets\Existing Bridge Plans\D366H21-sht-Existing Bridge Plans 0228-0229-041.dgn

QUIGG ENGINEERING INC

USER NAME = mwilson	DESIGNED -	REVISED -	
	DRAWN -	REVISED -	
PLOT SCALE = 2.0000 ' / in.	CHECKED -	REVISED -	
PLOT DATE = 10/2/2019	DATE - 10/4/2019	REVISED -	

STATE OF ILLINOIS
DEPARTMENT OF TRANSPORTATION

EXISTING STRUCTURAL PLANS
STRUCTURE NO. 050-0003/0004

SCALE: | SHEET 1 OF 4 SHEETS | STA. | TO STA.

F.A.I RTE.	SECTION	COUNTY	TOTAL SHEETS	SHEET NO.
80	50-2(HB-2)BDR(HB-1)BR(BR)BR-1	LASALLE	328	246
		CONTRACT NO. 66H21		
	ILLINOIS	FED. AID PROJECT		

F.A. RTE.	SECTION	COUNTY	TOTAL SHEETS	SHEET NO
80	*	LASALLE	196	97
STA.		TO STA.		
FED. ROAD DIST. NO.	ILLINOIS	FED. AID PROJECT		

*(50-2)HBR-1, HB-2, BR

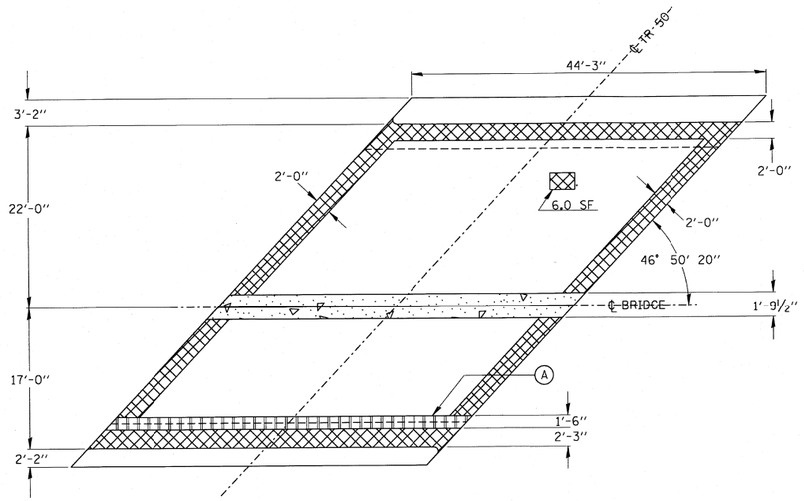

TOP OF DECK
I 80 WESTBOUND
STR NO 050–0004

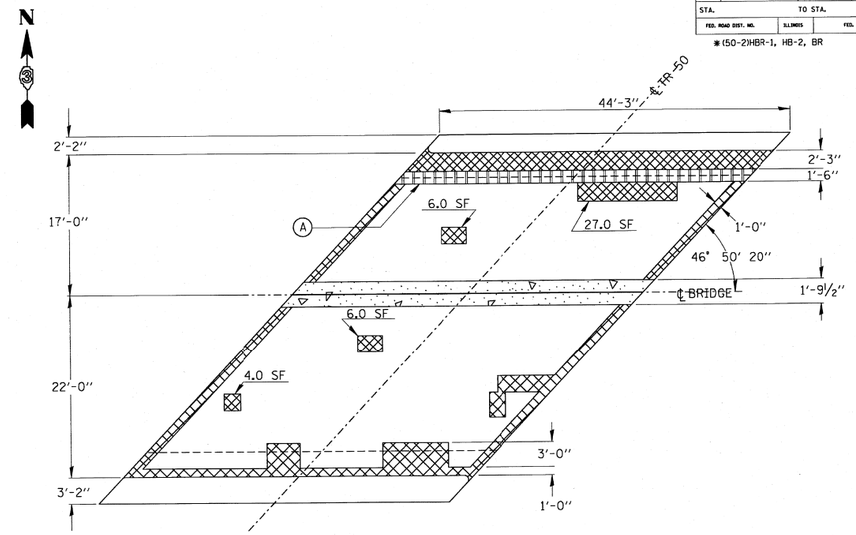

TOP OF DECK
I 80 EASTBOUND
STR NO 050–0003

LEGEND

- DECK SLAB REPAIR (PARTIAL)
- DECK SLAB REPAIR (FULL DEPTH, TY I)
- CONCRETE SUPERSTRUCTURE - CLASS BD
- EXISTING EXPANSION JOINT

(A) - FULL DEPTH DECK SLAB REPAIR AT THE EXISTNG DECK CONSTRUCTION JOINTS IS LIMITED TO ½ THE BRIDGE DECK LENGTH DURING ANY ONE REPAIR OPERATION. THE MOST RECENT FULL DEPTH REPAIR MUST BE PROPERLY CURED BEFORE ADDITIONAL FULL DEPTH DECK REMOVAL AND REPAIR OPERATIONS BEGIN.

ILLINOIS DEPARTMENT OF TRANSPORTATION

BILL OF MATERIALS

ITEM	UNIT	TOTAL QUANTITIES
BITUMINOUS CONCRETE REMOVAL (DECK)	SQ YD	192.0
DECK SLAB REPAIR (FULL DEPTH, TYPE I)	SQ YD	8.0
DECK SLAB REPAIR (PARTIAL)	SQ YD	42.0
BITUMINOUS CONCRETE SURFACE COURSE, MIX D CL I TY 1	TON	24.0
WATERPROOFING MEMBRANE SYSTEM	SQ YD	192.0
REINFORCEMENT BARS, EPOXY COATED	POUND	1060.0
CONCRETE REMOVAL	CU YD	3.0
CONCRETE SUPERSTRUCTURES - CLASS BD	CU YD	3.0
EXPANSION JOINT REHABILITATION	FOOT	106.0

ILLINOIS DEPARTMENT OF TRANSPORTATION

BILL OF MATERIALS

ITEM	UNIT	TOTAL QUANTITIES
BITUMINOUS CONCRETE REMOVAL (DECK)	SQ YD	192.0
DECK SLAB REPAIR (FULL DEPTH, TYPE I)	SQ YD	8.0
DECK SLAB REPAIR (PARTIAL)	SQ YD	38.0
BITUMINOUS CONCRETE SURFACE COURSE, MIX D CL I TY 1	TON	24.0
WATERPROOFING MEMBRANE SYSTEM	SQ YD	192.0
REINFORCEMENT BARS, EPOXY COATED	POUND	1060.0
CONCRETE REMOVAL	CU YD	3.0
CONCRETE SUPERSTRUCTURES - CLASS BD	CU YD	3.0
EXPANSION JOINT REHABILITATION	FOOT	106.0

REVISIONS	
NAME	DATE

ILLINOIS DEPARTMENT OF TRANSPORTATION
STRUCTURE REHABILITATION
FAI ROUTE 80
SECTION (50–2)HBR–1
LASALLE COUNTY
STA 627+23.50

SCALE: VERT. HORIZ. DRAWN BY
DATE CHECKED BY

FOR INFORMATION ONLY

MODEL: Default
FILE NAME: \\QuiggProjects\2018\18L018 Various Structure IDOT D3 Farnsworth PTB 161-21\Work Order 14 - I-80 Roadway and other\CADD\CADD Sheets\Existing Bridge Plans\D366H21-sht-Existing Bridge Plans 0228-0229 042.dgn

QUIGG ENGINEERING INC

USER NAME = mwilson	DESIGNED -	REVISED -	
	DRAWN -	REVISED -	
PLOT SCALE = 2.0000 ' / in.	CHECKED -	REVISED -	
PLOT DATE = 10/2/2019	DATE - 10/4/2019	REVISED -	

STATE OF ILLINOIS
DEPARTMENT OF TRANSPORTATION

EXISTING STRUCTURAL PLANS
STRUCTURE NO. 050–0003/0004

SCALE: SHEET 2 OF 4 SHEETS STA. TO STA.

F.A.I RTE.	SECTION	COUNTY	TOTAL SHEETS	SHEET NO.
80	50-2(HB-2)BDR(HB-1)BR(BR)BR-1	LASALLE	328	247
		CONTRACT NO. 66H21		
	ILLINOIS	FED. AID PROJECT		

F.A. RTE.	SECTION	COUNTY	TOTAL SHEETS	SHEET NO.
80	*	LASALLE	196	98
STA.		TO STA.		
FED. ROAD DIST. NO.	ILLINOIS	FED. AID PROJECT		

* (50-2)HBR-1, HB-2, BR

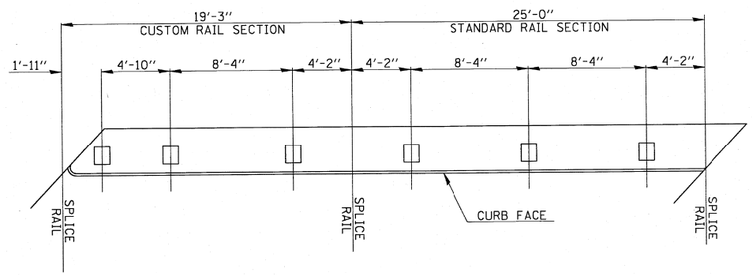

POST SPACING FOR TUBLAR THRIE BEAM RETROFIT RAIL

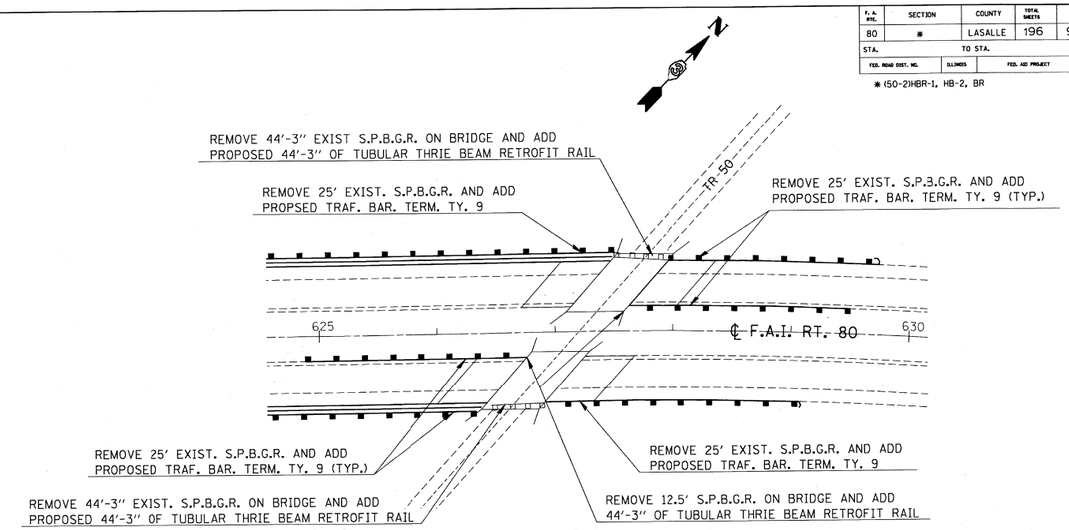

GUARDRAIL LOCATION PLAN VIEW

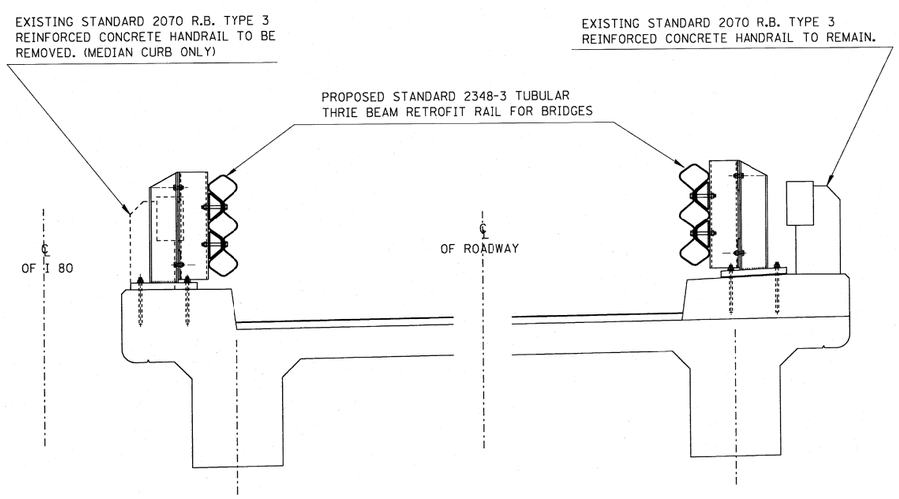

DETAIL B

DETAIL A

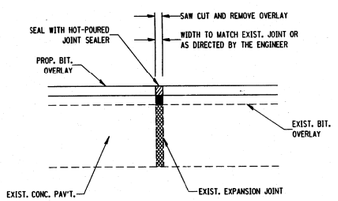

EXPANSION JOINT REHABILITATION DETAIL

GENERAL NOTES:

1. THE NEW BITUMINOUS OVERLAY SHALL BE SAWED, REMOVED, AND THE JOINT AREA CLEANED. PRIOR TO PLACING THE HOT-POURED JOINT SEALER THE JOINT SHALL BE BLOWN OUT WITH COMPRESSED AIR.
2. THIS WORK SHALL BE PAID FOR AT THE CONTRACT UNIT PRICE PER FOOT FOR EXPANSION JOINT REHABILITATION.

ILLINOIS DEPARTMENT OF TRANSPORTATION

BILL OF MATERIALS

ITEM	UNIT	TOTAL QUANTITIES
TUBULAR THRIE BEAM RETROFIT RAIL FOR BRIDGES	FOOT	177.0
STEEL PLATE BEAM GUARDRAIL REMOVAL	FOOT	263.5
TRAFFIC BARRIER TERMINAL TYPE 9	EACH	6.0
GUARDRAIL REFLECTORS	EACH	7.0
CONCRETE REMOVAL (MEDIAN CONCRETE HANDRAIL)	CU YD	2.2

TUBULAR THRIE BEAM BILL OF MATERIALS

ITEM	UNIT	QUANTITIES
POSTS	EACH	24
SPLICE RAILS	EACH	12
STANDARD (25') TUBULAR THRIE BEAM	EACH	4
CUSTOM LENGTHS OF 19'-3" THRIE BEAM	EACH	4

REVISIONS	
NAME	DATE

ILLINOIS DEPARTMENT OF TRANSPORTATION

STRUCTURE REHABILITATION
FAI ROUTE 80
SECTION (50-2)HBR-1
LASALLE COUNTY
STA 627+23.50

SCALE: VERT. HORIZ.
DRAWN BY
DATE
CHECKED BY

FOR INFORMATION ONLY

MODEL: Default
FILE NAME: \\QuiggProjects\2018\18IL018 Various Structure IDOT D3 Farnsworth PTB 161-21\Work Order 14 - I-80 Roadway and other\CADD\CADD Sheets\Existing Bridge Plans\D36GH21-sht-Existing Bridge Plans 0228-0229-043.dgn

QUIGG ENGINEERING INC

USER NAME = mwilson	DESIGNED -	REVISED -	
	DRAWN -	REVISED -	
PLOT SCALE = 2.0000 ' / in.	CHECKED -	REVISED -	
PLOT DATE = 10/2/2019	DATE - 10/4/2019	REVISED -	

STATE OF ILLINOIS
DEPARTMENT OF TRANSPORTATION

EXISTING STRUCTURAL PLANS
STRUCTURE NO. 050-0003/0004

SCALE: SHEET 3 OF 4 SHEETS STA. TO STA.

F.A.I RTE.	SECTION	COUNTY	TOTAL SHEETS	SHEET NO.
80	50-2(HB-2)BDR(HB-1)BR(BR)BR-1	LASALLE	328	248
		CONTRACT NO. 66H21		
	ILLINOIS	FED. AID PROJECT		

F.A. RTE.	SECTION	COUNTY	TOTAL SHEETS	SHEET NO.
80	*	LASALLE	196	99
STA.		TO STA.		
FED. ROAD DIST. NO.	ILLINOIS	FED. AID PROJECT		

* (50-2)HBR-1, HB-2, BR

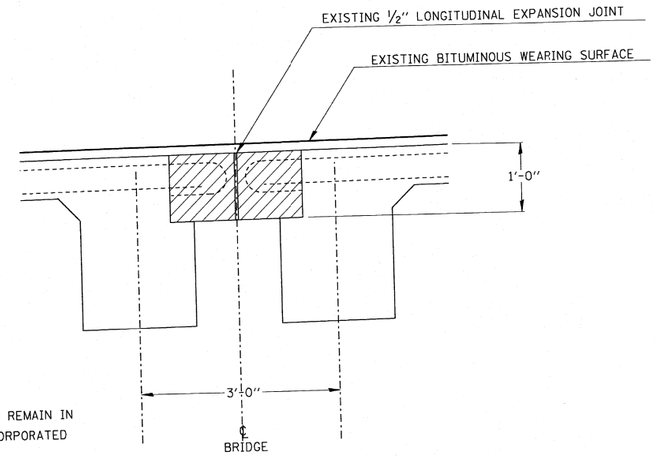

NOTE: EXISTING REINFORCEMENT TO REMAIN IN PLACE SHALL BE CLEANED AND INCORPORATED INTO THE NEW CONCRETE.

EXISTING LONGITUDINAL JOINT CROSS SECTION

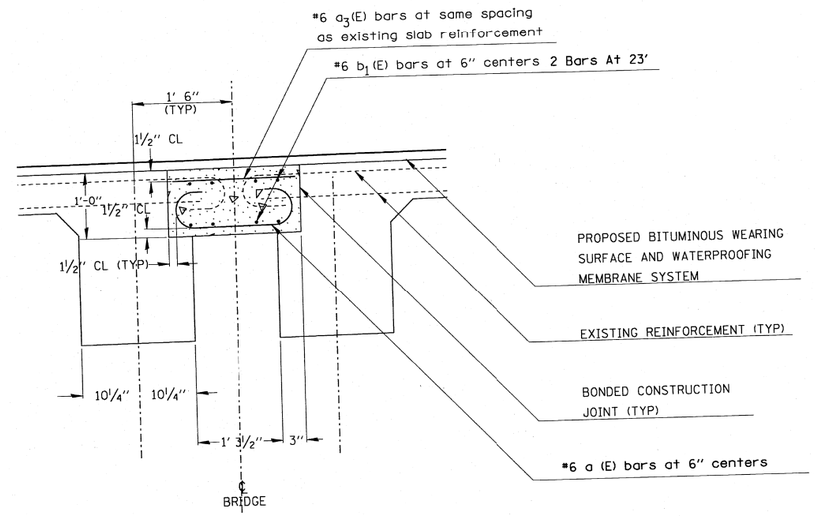

PROPOSED LONGITUDINAL JOINT CROSS SECTION

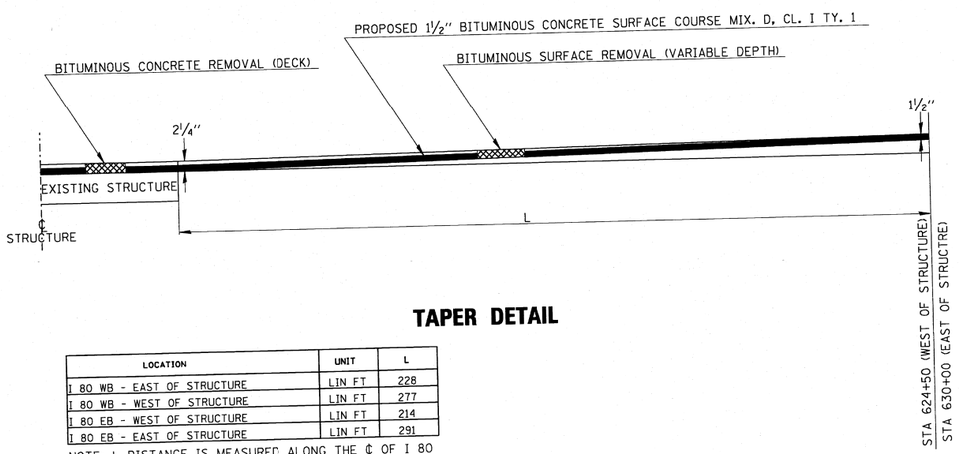

TAPER DETAIL

LOCATION	UNIT	L
I 80 WB - EAST OF STRUCTURE	LIN FT	228
I 80 WB - WEST OF STRUCTURE	LIN FT	277
I 80 EB - WEST OF STRUCTURE	LIN FT	214
I 80 EB - EAST OF STRUCTURE	LIN FT	291

NOTE: L DISTANCE IS MEASURED ALONG THE ℄ OF I 80

ILLINOIS DEPARTMENT OF TRANSPORTATION

SUPERSTRUCTRE BILL OF MATERIALS

BAR	NO.	SIZE	LENGTH	SHAPE
a (E)	88	6	2'-10"	
a3 (E)	88	6	1'-0"	
b1 (E)	16	6	23'-0"	
REINFORCEMENT BARS EPOXY COATED			LBS	1060

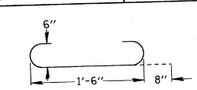

a (E) BAR DETAIL

REVISIONS	
NAME	DATE

ILLINOIS DEPARTMENT OF TRANSPORTATION

STRUCTURE REHABILITATION
FAI ROUTE 80
SECTION (50-2)HBR-1
LASALLE COUNTY
STA 627+23.50

SCALE: VERT. HORIZ. DRAWN BY
DATE CHECKED BY

FOR INFORMATION ONLY

MODEL: Default
FILE NAME: \\QuiggProjects\2018\18L018 Various Structure IDOT D3 Farnsworth PTB 161-21\Work Order 14 - I-80 Roadway and other\CADD\CADD Sheets\Existing Bridge Plans\D366H21-sht-Existing Bridge Plans 0228-0229 044.dgn

QUIGG ENGINEERING INC

USER NAME = mwilson	DESIGNED -	REVISED -
	DRAWN -	REVISED -
PLOT SCALE = 2.0000 ' / in.	CHECKED -	REVISED -
PLOT DATE = 10/2/2019	DATE - 10/4/2019	REVISED -

STATE OF ILLINOIS
DEPARTMENT OF TRANSPORTATION

EXISTING STRUCTURAL PLANS
STRUCTURE NO. 050-0003/0004

SCALE: SHEET 4 OF 4 SHEETS STA. TO STA.

F.A.I RTE.	SECTION	COUNTY	TOTAL SHEETS	SHEET NO.
80	50-2(HB-2)BDR(HB-1)BR(BR)BR-1	LASALLE	328	249
		CONTRACT NO. 66H21		
		ILLINOIS	FED. AID PROJECT	

F.A.I. RTE.	SECTION	COUNTY	TOTAL SHEETS	SHEET NO.
80	*	LASALLE	196	102
F.A.U.R. REG.	ILLINOIS	PROJECT		

* (50-2)HBR-I, HB-2, BR
P-93-022-90
D-93-033-93

STATE OF ILLINOIS
DEPARTMENT OF TRANSPORTATION
DIVISIONS OF HIGHWAYS
PLANS FOR PROPOSED
FEDERAL AID HIGHWAY

F.A.I. ROUTE 80 (I-80)
SECTION (50-2)BR
LASALLE COUNTY

PROJECT
C-93-039-95

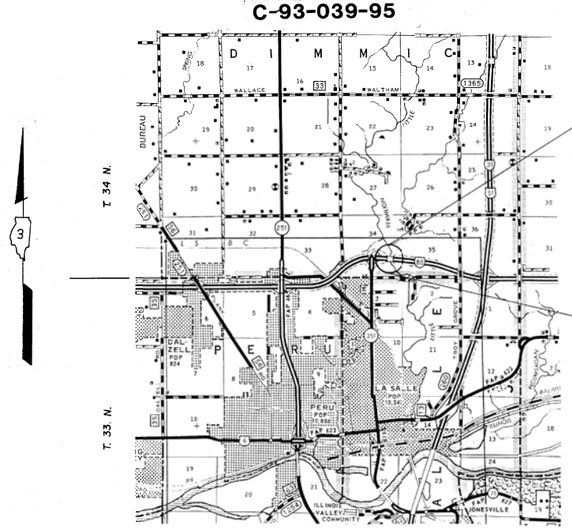

SECTION (50-2)BR
BEGINS AT STA. 668+50

SECTION (50-2)BR
INCLUDES THE CONSTRUCTION OF TWO PARALLEL 4-SPAN BULB-T BRIDGES WITH SPILL-THRU ABUTMENTS AND REINFORCED CONCRETE PIERS.

WEST BOUND STRUCTURE:
STA. 672+09.32
SKEWED 8° RIGHT AHEAD
442'-8" BK.-BK. ABUTMENTS

EAST BOUND STRUCTURE:
STA. 672+19.43
SKEWED 8° RIGHT AHEAD
442'-5 1/2" BK.-BK. ABUTMENTS

SECTION (50-2)BR
ENDS AT STA. 676+75

LOCATION OF SECTION INDICATED THUS: -■-

3190 (05) INTERSTATE HIGHWAY

MICROFILMED _____
REEL NUMBER _____
AWARDED _____
RESIDENT ENGINEER _____
AS BUILT CHANGES WERE MADE
ON THE FOLLOWING SHEETS _____

JULIE 1-800-892-0123

DISTRICT 3 NO. (815) 434-6131

PROJECT ENGINEER: LYLE SCHAUB
UNIT CHIEF: MARK JONES
TOWNSHIP: DIMMICK

PLAN & PROFILE — HORIZONTAL 0 20 40 FT. — VERTICAL 0 10 20 FT.
CROSS SECTIONS — HORIZONTAL 0 10 20 FT. — VERTICAL 0 5 10 FT.

LOCATION MAP
0 1 MI. 2 MI. 3 MI.
NET LENGTH = 825 FEET = 0.1563 MILE

RICHARD A. GUALANDI
39783
REGISTERED PROFESSIONAL ENGINEER OF ILLINOIS
Richard A. Gualandi
June 20, 1994
(License Expires 11-30-94)

PLANS PREPARED BY:
Wendler Engineering & Surveying
DIXON, ILLINOIS
DEKALB, ILLINOIS
PRINCETON, ILLINOIS

U.S. DEPARTMENT OF TRANSPORTATION
FEDERAL HIGHWAY ADMINISTRATION
APPROVED
DIVISION ENGINEER DATE

CONTRACT NO. 86601

LASALLE COUNTY SECTION: (50-2)BR ROUTE: F.A.I. 80 (I-80)

FOR INFORMATION ONLY

MODEL: Default
FILE NAME: \QuiggProjects\2018\18L018 Various Structure IDOT D3 Farnsworth PTB 161-21\Work Order 14 - I-80 Roadway and other\CADD\CADD Sheets\Existing Bridge Plans\D366H21-cht-Existing Bridge Plans 0228-0229 045.dgn

QUIGG ENGINEERING INC

USER NAME = mwilson	DESIGNED -	REVISED -	
	DRAWN -	REVISED -	
PLOT SCALE = 2.0000 ' / in.	CHECKED -	REVISED -	
PLOT DATE = 10/2/2019	DATE - 10/4/2019	REVISED -	

STATE OF ILLINOIS
DEPARTMENT OF TRANSPORTATION

EXISTING STRUCTURAL PLANS
STRUCTURE NO. 050-0220/0221

SCALE: SHEET 1 OF 42 SHEETS STA. TO STA.

F.A.I RTE.	SECTION	COUNTY	TOTAL SHEETS	SHEET NO.
80	50-2(HB-2)BDR(HB-1)BR(BR)BR-1	LASALLE	328	250
		CONTRACT NO. 66H21		
	ILLINOIS	FED. AID PROJECT		

F.A.I. ROUTE NO.	SEC	COUNTY	TOTAL SHEETS	SHEET NO.
80	*	LASALLE	196	120
ILLINOIS PROJECT				

* (50-2)HBR-I, HB-2, BR

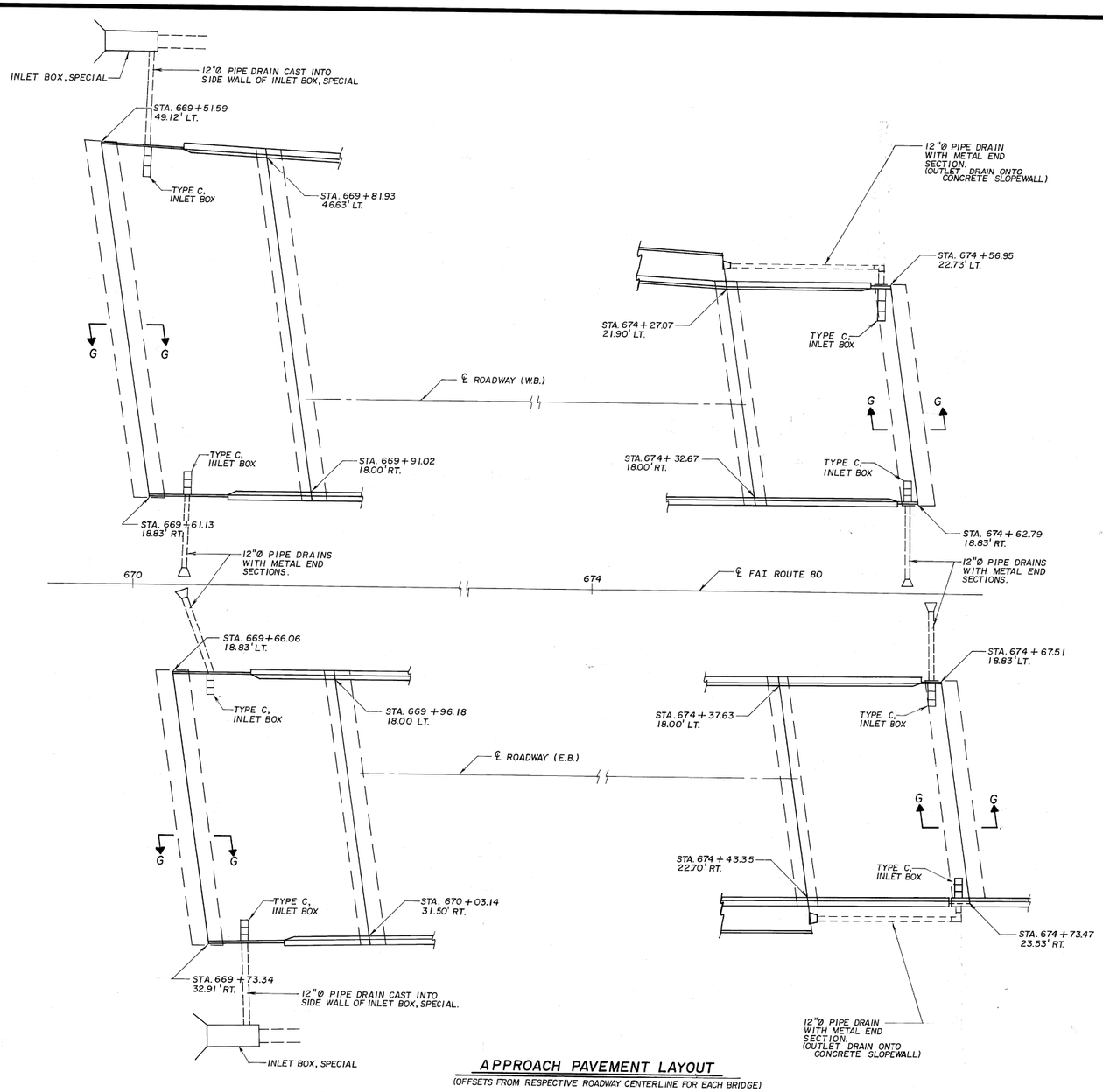

APPROACH PAVEMENT LAYOUT

(OFFSETS FROM RESPECTIVE ROADWAY CENTERLINE FOR EACH BRIDGE)

GENERAL NOTES

SEE STANDARD 2442 FOR ADDITIONAL DETAILS.

INLET BOXES OF THE TYPE SHOWN SHALL BE INSTALLED ACCORDING TO STANDARD 2443.

BLOCK OUT PORTIONS OF THE CONCRETE SUPPORT PADS ON THE EAST BRIDGE APPROACH PAVEMENTS AS REQUIRED FOR INSTALLATION OF INLET BOXES.

THE PIPE DRAIN FOR THE SOUTHEAST INLET BOX OF THE EAST BOUND BRIDGE SHALL PASS THROUGH THE CONCRETE RETAINING WALL.

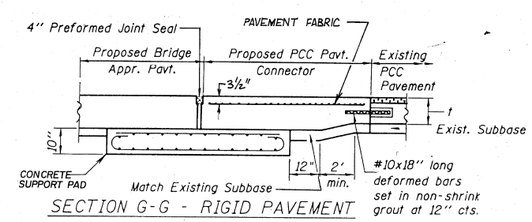

SECTION G-G - RIGID PAVEMENT

BRIDGE APPROACH PAVEMENT LAYOUT

STR. NO. 050-0220 (E.B.)
050-0221 (W.B.)

FOR INFORMATION ONLY

MODEL: Default
FILE NAME: \\QuiggProjects\2018\18L018 Various Structure IDOT D3 Farnsworth PTB 161-21\Work Order 14 - I-80 Roadway and other\CADD\CADD Sheets\Existing Bridge Plans\0366H21-sht-Existing Bridge Plans 0228-0229 046.dgn

QUIGG ENGINEERING INC

USER NAME = mwilson	DESIGNED -	REVISED -	
	DRAWN -	REVISED -	
PLOT SCALE = 2.0000 ' / in.	CHECKED -	REVISED -	
PLOT DATE = 10/2/2019	DATE - 10/4/2019	REVISED -	

STATE OF ILLINOIS
DEPARTMENT OF TRANSPORTATION

EXISTING STRUCTURAL PLANS
STRUCTURE NO. 050-0220/0221

SCALE: | SHEET 2 OF 42 SHEETS | STA. | TO STA.

F.A.I RTE.	SECTION	COUNTY	TOTAL SHEETS	SHEET NO.
80	50-2(HB-2)BDR(HB-1)BR(BR)BR-1	LASALLE	328	251
		CONTRACT NO. 66H21		
		ILLINOIS FED. AID PROJECT		

F.A.I. ROUTE NO.	SEC.	COUNTY	TOTAL SHEETS	SHEET NO.
80	*	LASALLE	196	127

ILLINOIS PROJECT

BR. SHEET 1 OF 47

* (50-2)HBR-I, HB-2, BR

BM - CHISELED "□" ON END OF N.E. WINGWALL ON W.B. STRUCTURE ELEV. 594.20 (USGS)

EXISTING STRUCTURES: TWO - FOUR SPAN CONTINUOUS STEEL PLATE GIRDER BRIDGES WITH CONCRETE SLAB AND CONCRETE PIERS AND ABUTMENTS. BUILT IN 1961 AS F.A. PROJECT I-80-3(36)78, SECTION 50 - 2B & 2P. EACH BRIDGE IS 30 FEET PACE TO FACE OF CURBS AND 414' - 6" BACK TO BACK OF ABUTMENTS. EXISTING STRUCTURES TO BE REMOVED EXCEPT FOR EAST ABUTMENT PILES WHICH WILL BE REUSED. EXISTING STRUCTURE NUMBERS 050-0005 & 050-0006. NO SALVAGE. TRAFFIC TO BE MAINTAINED UTILIZING MEDIAN CROSS-OVER AND CONSTRUCTING ONE BRIDGE AT A TIME, STARTING WITH THE WESTBOUND STRUCTURE.

** SEE FINAL LAYOUT SHEETS FOR SPECIFIC TRAFFIC BARRIER TERMINAL TREATMENT.

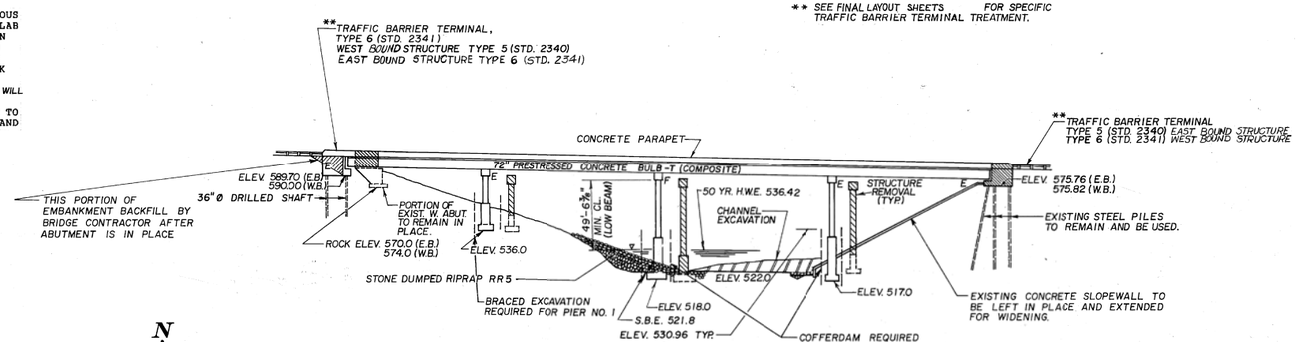

ELEVATION

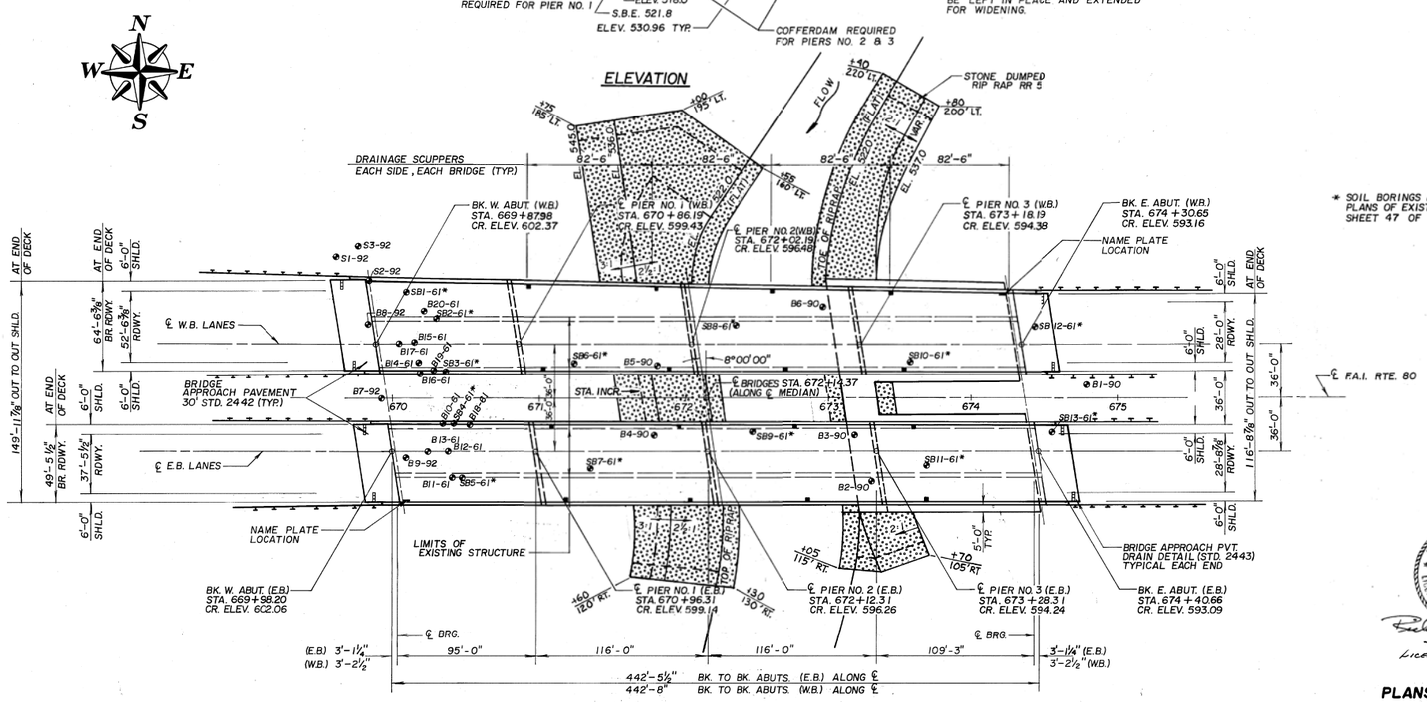

PLAN

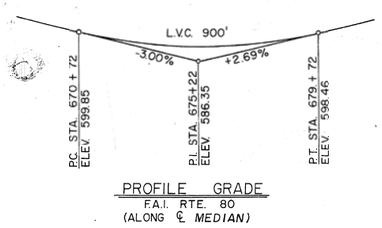

PROFILE GRADE

F.A.I. RTE. 80 (ALONG ℄ MEDIAN)

WATERWAY INFORMATION

Drainage Area = 118.44 Sq. Mi.. Low Grade Elev. = 592.73 @ Sta. 675+46.52

Flood	Freq. Yr.	Q C.F.S.	Opening Sq. Ft. @ Exist.	Opening Sq. Ft. @ Prop.	Nat. H.W.E.	Head-Ft. Exist.	Head-Ft. Prop.	Headwater El. Exist.	Headwater El. Prop.
Design	50	8386	1573	1638	536.42	0.15	0.18	536.57	536.60
Base	100	9486	1591	1791	537.29	0.12	0.15	537.41	537.44
Overtopping									
Max. Calc.	500	12051	2013	2112	539.06	0.05	0.09	539.11	539.15

(APPROACH SECTION 500' UPSTREAM)

@ OPENING AT BRIDGE LOCATION USING WATER SURFACE ELEVATION AS NOTED IN THE HYDRAULIC CALCULATIONS FOR THE RESPECTIVE FLOOD FREQUENCY.

EAST BOUND BRIDGE
STATION 672+19.43
REBUILT 199 BY
STATE OF ILLINOIS
F.A.I. RT. 80 SEC(50-2)BR
F.A. PROJ.
LOADING HS 20 & ALT.
STR. NO. 050-0220

WEST BOUND BRIDGE
STATION 672+09.32
REBUILT 199 BY
STATE OF ILLINOIS
F.A.I. RT. 80 SEC(50-2)BR
F.A. PROJ.
LOADING HS 20 & ALT.
STR. NO. 050-0221

LETTERING FOR NAMEPLATE
SEE STANDARD 2113

DESIGN SPECICATIONS

AASHTO 1992 SPECIFICATIONS, 1993 INTERIMS

LOADING HS 20-44 & ALT.

ALLOW 25#/SQ. FT. FOR FUTURE WEARING SURFACE.

DESIGN STRESSES

FIELD UNITS

f'c = 3,500 psi
fy = 60,000 psi (REINF)
fy = 36,000 psi (Structural Steel M270 Gr. 36)

SEISMIC DATA

(S.P.C.) = A
(A) = 3.7
SITE COEFFICIENT(S) = 1.0

PRECAST PRESTRESSED UNITS

f'c = 6,000 psi
f'ci = 5,000 psi
f's = 270,000 psi (1/2" DIA LOW-RELAXATION STRANDS)
f'si = 201,960 psi (1/2" DIA LOW-RELAXATION STRANDS)

* SOIL BORINGS FROM ORIGINAL DESIGN PLANS OF EXISTING BRIDGES. (SEE BR. SHEET 47 OF 47).

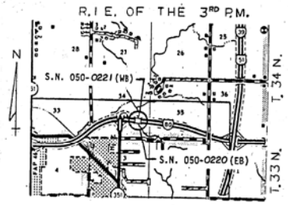

LOCATION SKETCH

APPROVED
FOR STRUCTURAL ADEQUACY ONLY
Ralph E. Anderson
Engineer of Bridges and Structures

STATE OF ILLINOIS
RICHARD A. BAUMANN
4732
DIXON, ILL.
LICENSED STRUCTURAL ENGINEER

June 10, 1994
LICENSE EXPIRES 11-30-94

PLANS PREPARED BY:

Wendler Engineering & Surveying

DIXON, ILLINOIS
DEKALB, ILLINOIS
PRINCETON, ILLINOIS

GENERAL PLAN AND ELEVATION
F.A.I. ROUTE 80 SEC (50-2)BR
OVER LITTLE VERMILION RIVER
LA SALLE COUNTY
STRUCTURE NUMBER 050-0220 E.B.
050-0221 W.B.

FOR INFORMATION ONLY

QUIGG ENGINEERING INC

USER NAME = mwilson	DESIGNED -	REVISED -	
	DRAWN -	REVISED -	
PLOT SCALE = 2.0000 ' / in.	CHECKED -	REVISED -	
PLOT DATE = 10/2/2019	DATE - 10/4/2019	REVISED -	

STATE OF ILLINOIS
DEPARTMENT OF TRANSPORTATION

EXISTING STRUCTURAL PLANS
STRUCTURE NO. 050-0220/0221

SCALE: SHEET 3 OF 42 SHEETS STA. TO STA.

F.A.I RTE.	SECTION	COUNTY	TOTAL SHEETS	SHEET NO.
80	50-2(HB-2)BDR(HB-1)BR(BR)BR-1	LASALLE	328	252

CONTRACT NO. 66H21

ILLINOIS FED. AID PROJECT

MODEL: Default
FILE NAME: \\QuiggProjects\2018\18L018 Various Structure IDOT D3 Farnsworth PTB 161-2\Work Order 14 - I-80 Roadway and other\CADD\CADD Sheets\Existing Bridge Plans 0228-0229 047.dgn

F.A.I. ROUTE NO.	SEC	COUNTY	TOTAL SHEETS	SHEET NO.
80	*	LASALLE	196	128
ILLINOIS PROJECT				

SHEET 2 OF 47

* (50-2)HBR-I, HB-2, BR

TOTAL BILL OF MATERIAL

ITEM	UNIT	STRUCTURE NO. 050-0220 (E.B.) SUPER	SUB.	TOTAL	STRUCTURE NO. 050-0221 (W.B.) SUPER	SUB.	TOTAL	TOTAL
REMOVAL OF EXISTING STRUCTURES NO. 1	EACH			1				1
REMOVAL OF EXISTING STRUCTURES NO. 2	EACH						1	1
STRUCTURE EXCAVATION	CU. YD.		365	365		372	372	737
COFFERDAM EXCAVATION	CU. YD.		335	335		286	286	621
BRACED EXCAVATION	CU. YD.		514	514		625	625	1139
ROCK EXCAVATION FOR STRUCTURES	CU. YD.		1144	1144		995	995	2139
COFFERDAMS	EACH		2	2		2	2	4
SLOPE WALL REMOVAL	SQ. YD.		151	151		151	151	302
SLOPE WALL 6 INCH	SQ. YD.		340	340		367	367	707
NEOPRENE EXPANSION JOINT 4"	FOOT	98		98	112		112	210
CONCRETE SUPERSTRUCTURE	CU. YD.	792.9		792.9	900.4		900.4	1693.3
* PROTECTIVE COAT	SQ. YD.	406		406	395		395	801
ELASTOMERIC BEARING ASSEMBLY, TYPE I	EACH	28		28	32		32	60
ELASTOMERIC BEARING ASSEMBLY, TYPE II	EACH	14		14	16		16	30
CONCRETE STRUCTURES	CU. YD.		1547.1	1547.1		1824.3	1824.3	3371.4
FURNISHING AND ERECTING PRECAST PRESTRESSED CONCRETE BULB T-BEAMS 72"	FOOT	3053		3053	3509		3509	6562
FURNISHING & ERECTING STRUCTURAL STEEL	POUND	3183		3183	3637		3637	6820
REINFORCEMENT BARS, EPOXY COATED	POUND	175830	213440	389270	216040	254670	470710	859980
FURNISHING STEEL PILES HP 10 x 42	FOOT		560	560		560	560	1120
DRIVING STEEL PILES	FOOT		560	560		560	560	1120
SEAL COAT CONCRETE	CU. YD.		36.3	36.3		39.8	39.8	76.1
NAME PLATES	EACH	1		1	1		1	2
BRIDGE SEAT SEALER	SQ. FT.		317	317		363	363	680
DRAINAGE SCUPPERS (SPECIAL)	EACH	8		8	8		8	16
BRIDGE DECK GROOVING	SQ. YD.	2200		2200	2550		2550	4750
CAISSON SHAFTS 36"	CU. FT.		1413	1413		2225	2225	3638
STONE DUMPED RIPRAP CLASS A5	TON			3971			5683	9654
FILTER FABRIC FOR USE WITH RIPRAP	SQ. YD.			1430			2779	4209

* QUANTITY IS FOR TOP AND INSIDE FACE OF PARAPET, WINGWALL, AND RETAINING WALL ONLY.

GENERAL NOTES

REINFORCEMENT BARS SHALL CONFORM TO THE REQUIREMENTS OF AASHTO M-31, M-42 OR M-53, GRADE 60.

ALL STRUCTURAL STEEL SHALL BE SHOP PAINTED WITH THE INORGANIC ZINC-SILICATE / ACRYLIC / ACRYLIC PAINT SYSTEM. THE COLOR OF THE ACRYLIC FINISH COATS SHALL BE MUNSELL NO. 10Y 7/1 LIGHT GREY.

BRIDGE SEAT SEALER SHALL BE APPLIED TO SEAT AREA OF THE ABUTMENTS.

A PORTION OF THE EMBANKMENT MUST BE CONSTRUCTED PRIOR TO CONSTRUCTION OF THE ABUTMENTS, AS INDICATED IN THE ROADWAY APPROACH CROSS SECTIONS.

PLAN DIMENSIONS AND DETAILS RELATIVE TO EXISTING STRUCTURE HAVE BEEN TAKEN FROM EXISTING PLANS AND ARE SUBJECT TO NOMINAL CONSTRUCTION VARIATIONS. IT SHALL BE CONTRACTOR'S RESPONSIBILITY TO VERIFY SUCH DIMENSIONS AND DETAILS IN THE FIELD AND MAKE NECESSARY APPROVED ADJUSTMENTS PRIOR TO CONSTRUCTION OR ORDERING OF MATERIALS. SUCH VARIATIONS SHALL NOT BE CAUSE FOR ADDITIONAL COMPENSATION FOR A CHANGE IN THE SCOPE OF THE WORK, HOWEVER, THE CONTRACTOR WILL BE PAID FOR THE QUANTITY ACTUALLY FURNISHED AT THE UNIT PRICE BID FOR THE WORK.

SLOPE WALL SHALL BE REINFORCED WITH WELDED WIRE FABRIC, 6" X 6" - W4.0 X W4.0, WEIGHING 58 LBS. PER 100 SQ. FT.

LAYOUT OF SLOPE PROTECTION SYSTEM MAY BE VARIED IN THE FIELD TO SUIT GROUND CONDITIONS AS DIRECTED BY THE ENGINEER.

GENERAL NOTES AND BILL OF MATERIAL
F.A.I. ROUTE 80 SEC. (50-2)BR
LASALLE COUNTY
STRUCTURE NUMBER 050-0220 E.B.
050-0221 W.B.

FOR INFORMATION ONLY

MODEL: Default
FILE NAME: \\QuiggProjects2018\18L018 Various Structure IDOT D3 Farnsworth PTB 161-21\Work Order 14 - I-80 Roadway and other\CADD\Sheets\Existing Bridge Plans\0366121-sht-Existing Bridge Plans 0228-0229 048.dgn

QUIGG ENGINEERING INC

USER NAME = mwilson	DESIGNED -	REVISED -
	DRAWN -	REVISED -
PLOT SCALE = 2.0000 ' / in.	CHECKED -	REVISED -
PLOT DATE = 10/2/2019	DATE - 10/4/2019	REVISED -

STATE OF ILLINOIS
DEPARTMENT OF TRANSPORTATION

EXISTING STRUCTURAL PLANS
STRUCTURE NO. 050-0220/0221

SCALE: | SHEET 4 OF 42 SHEETS | STA. | TO STA.

F.A.I RTE.	SECTION	COUNTY	TOTAL SHEETS	SHEET NO.
80	50-2(HB-2)BDR(HB-1)BR(BR)BR-1	LASALLE	328	253
		CONTRACT NO. 66H21		
	ILLINOIS	FED. AID PROJECT		

F.A.I. ROUTE NO.	SEC.	COUNTY	TOTAL SHEETS	SHEET NO.
80	*	LASALLE	196	129

ILLINOIS PROJECT

BR. SHEET 3 OF 47

* (50-2)HBR-I, HB-2, BR

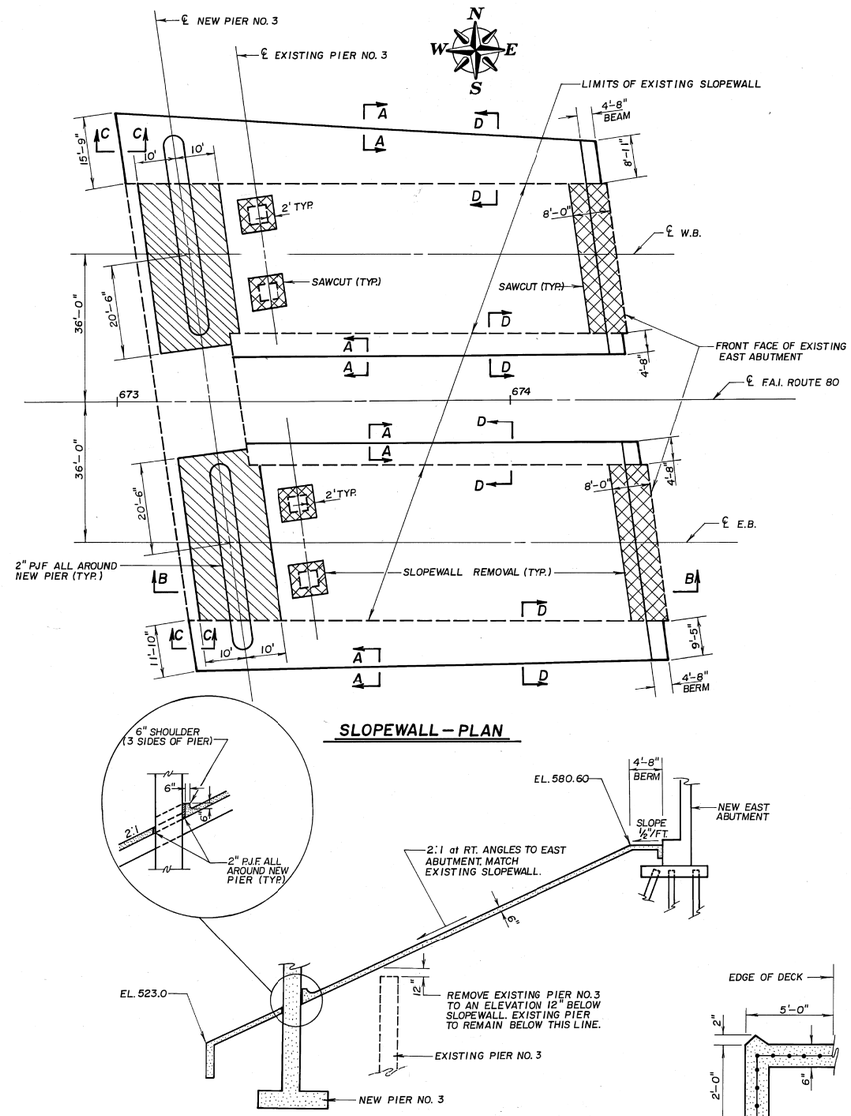

SLOPEWALL – PLAN

SECTION B–B

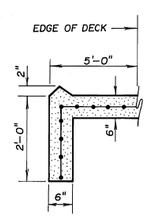

SECTION A–A

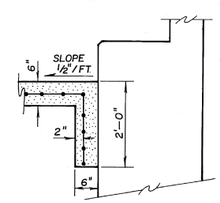

SECTION AT ABUTMENT

EXTEND TOE BEYOND ENDS OF ABUTMENT CAP.

SLOPEWALL NOTES:

SLOPEWALL SHALL BE REINFORCED WITH WELDED WIRE FABRIC 6" X 6" - W4.0 WEIGHING 58 LBS. PER 100 SQUARE FEET.

COST OF FURNISHING AND PLACING WELDED WIRE FABRIC: FURNISHING, DRILLING AND PLACING REINFORCEMENT BARS; EXCAVATING AND BACKFILLING SHALL BE CONSIDERED INCIDENTAL TO THE COST OF SLOPEWALL.

EXISTING SLOPEWALL SHALL BE SAWCUT 2' BEYOND THE PERIMETER OF EXISTING PIER #3. PIER #3 SHALL BE REMOVED TO AN ELEVATION 12" BELOW THE BOTTOM OF THE SLOPEWALL. THE SLOPEWALL SHALL THEN BE REPOURED AND REINFORCED WITH WELDED WIRE FABRIC AND #4 BARS DRILLED INTO EXISTING SLOPEWALL AS DETAILED IN SECTION D-D.

EXISTING SLOPEWALL SHALL BE SAWCUT 8' FROM THE FACE OF THE EXISTING EAST ABUTMENT AS SHOWN. AFTER THE EXISTING EAST ABUTMENTS ARE REMOVED AND REPOURED THE SLOPEWALL SHALL BE REPOURED AND REINFORCED WITH WELDED WIRE FABRIC AND #4 BARS DRILLED INTO EXISTING SLOPEWALL AS DETAILED IN SECTION D-D.

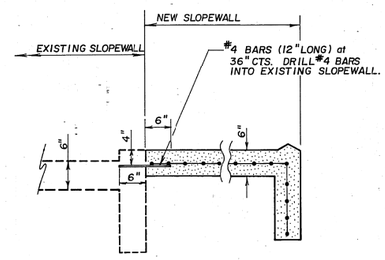

SECTION D–D

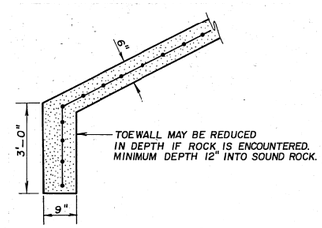

SECTION C–C

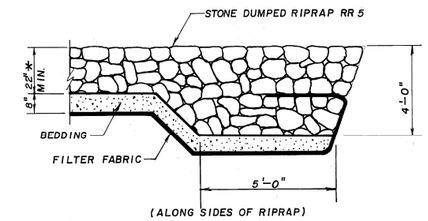

(ALONG SIDES OF RIPRAP)

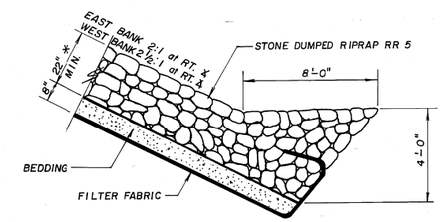

(ALONG TOE OF RIPRAP)

STONE RIPRAP TREATMENT

* RIPRAP THICKNESS VARIES AS INDICATED ON SHEETS 12 AND 15 OF THE PLANS.

NOTE: KEY RIPRAP A MINIMUM OF 30" INTO BEDROCK, IF ENCOUNTERED. (SEE CHANNEL CROSS SECTIONS)

BILL OF MATERIAL

ITEM	UNIT	QUANTITY
EASTBOUND SLOPEWALL REMOVAL	SQ. YDS.	151
EASTBOUND SLOPEWALL 6 INCH	SQ. YDS.	340
WESTBOUND SLOPEWALL REMOVAL	SQ. YDS.	151
WESTBOUND SLOPEWALL 6 INCH	SQ. YDS.	367
ROCK EXCAVATION FOR STRUCTURES	CU. YD.	548
EASTBOUND STONE DUMPED RIPRAP, CLASS A5	TON	3971
WESTBOUND STONE DUMPED RIPRAP, CLASS A5	TON	5683

SLOPEWALL AND RIPRAP DETAILS
F.A.I. ROUTE 80 SEC (50-2)BR
LA SALLE COUNTY
STRUCTURE NUMBER 050-0220 E.B.
050-0221 W.B.

FOR INFORMATION ONLY

MODEL: Default
FILE NAME: \Quigg\Projects\2018\IL018 Various Structure IDOT D3 Farnsworth PTB 161-21\Work Order 14 - I-80 Roadway and other\CADD\CADD Sheets\Existing Bridge Plans\D3661121-sht-Existing Bridge Plans 0228-0229 049.dgn

QUIGG ENGINEERING INC

USER NAME = mwilson	DESIGNED -	REVISED -	
	DRAWN -	REVISED -	
PLOT SCALE = 2.0000 ' / in.	CHECKED -	REVISED -	
PLOT DATE = 10/2/2019	DATE - 10/4/2019	REVISED -	

STATE OF ILLINOIS
DEPARTMENT OF TRANSPORTATION

EXISTING STRUCTURAL PLANS
STRUCTURE NO. 050–0220/0221

SCALE: SHEET 5 OF 42 SHEETS STA. TO STA.

F.A.I. RTE.	SECTION	COUNTY	TOTAL SHEETS	SHEET NO.
80	50-2(HB-2)BDR(HB-1)BR(BR)BR-1	LASALLE	328	254

CONTRACT NO. 66H21

ILLINOIS FED. AID PROJECT

F.A.I. ROUTE NO.	SEC.	COUNTY	TOTAL SHEETS	SHEET NO.
80	*	LASALLE	196	130

ILLINOIS PROJECT

BR. SHEET 4 OF 47

* (50-2)HBR-1, HB-2, BR

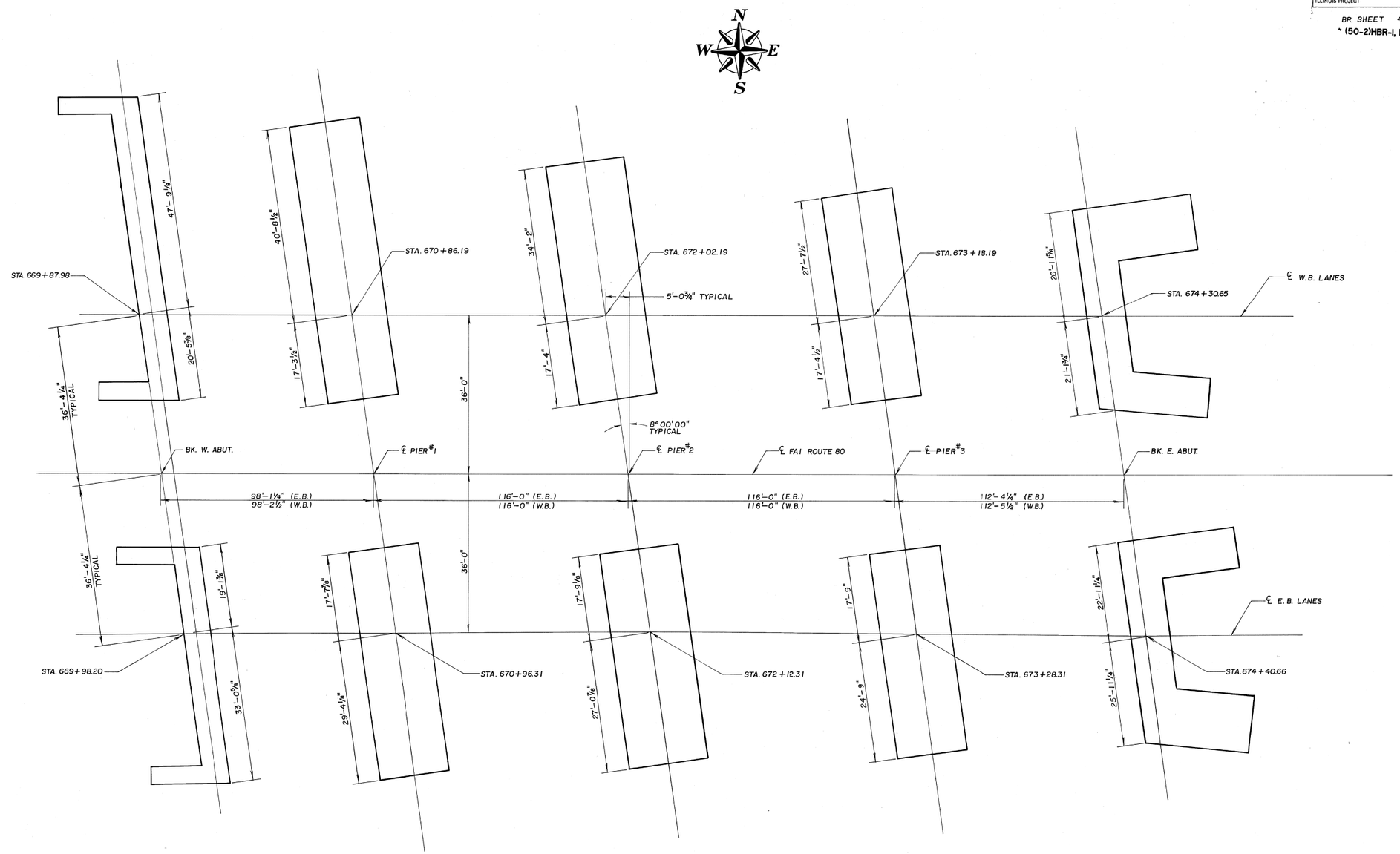

FOOTING LAYOUT

FOOTING LAYOUT
F.A.I. ROUTE 80 SEC. (50-2) BR
LASALLE COUNTY
STRUCTURE NUMBER 050-0220 E.B.
050-0221 W.B.

FOR INFORMATION ONLY

MODEL: Default
FILE NAME: \\QuiggProjects\2018\18L018 Various Structure IDOT D3 Farnsworth PTB 161-21\Work Order 14 - I-80 Roadway and other\CADD\CADD Sheets\Existing Bridge Plans\0366H21-sht-Existing Bridge Plans 0228-0229-050.dgn

QUIGG ENGINEERING INC

USER NAME = mwilson	DESIGNED -	REVISED -	
	DRAWN -	REVISED -	
PLOT SCALE = 2.0000 ' / in.	CHECKED -	REVISED -	
PLOT DATE = 10/2/2019	DATE - 10/4/2019	REVISED -	

STATE OF ILLINOIS
DEPARTMENT OF TRANSPORTATION

EXISTING STRUCTURAL PLANS
STRUCTURE NO. 050-0220/0221

SCALE: SHEET 6 OF 42 SHEETS STA. TO STA.

F.A.I RTE.	SECTION	COUNTY	TOTAL SHEETS	SHEET NO.
80	50-2(HB-2)BDR(HB-1)BR(BR)BR-1	LASALLE	328	255
		CONTRACT NO. 66H21		
	ILLINOIS	FED. AID PROJECT		

F.A. ROUTE NO.	SEC	COUNTY	TOTAL SHEETS	SHEET NO.
80	*	LASALLE	196	131

ILLINOIS PROJECT

BR. SHEET 5 OF 47

* (50-2)HBR-1, HB-2, BR

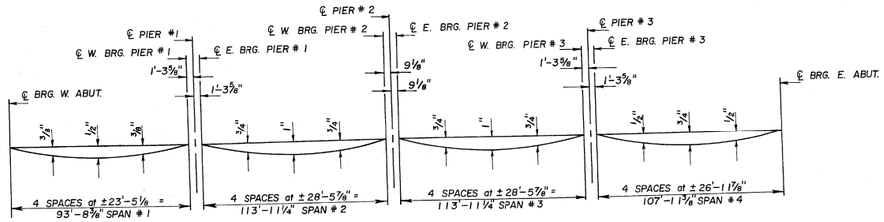

DEAD LOAD DEFLECTION DIAGRAM

(INCLUDES WEIGHT OF CONCRETE SLAB ONLY)

NOTE: THE ABOVE DEFLECTIONS ARE NOT TO BE USED IN THE FIELD IF THE ENGINEER IS WORKING FROM THE GRADE ELEVATIONS ADJUSTED FOR DEAD LOAD DEFLECTIONS AS SHOWN ON SHEETS 6 & 7 OF 47.

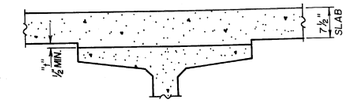

TO DETERMINE "t": AFTER ALL PRECAST PRESTRESSED BEAMS HAVE BEEN ERECTED. ELEVATIONS OF THE TOP FLANGES OF THE BEAMS SHALL BE TAKEN AT INTERVALS SHOWN ON THIS SHEET AND SHEETS 6 & 7 of 47. THESE ELEVATIONS SUBTRACTED FROM THE "THEORETICAL GRADE ELEVATIONS ADJUSTED FOR DEAD LOAD DEFLECTIONS" MINUS SLAB THICKNESS, EQUALS THE FILLET HEIGHTS "t" ABOVE TOP FLANGES OF BEAMS.

FILLET HEIGHTS

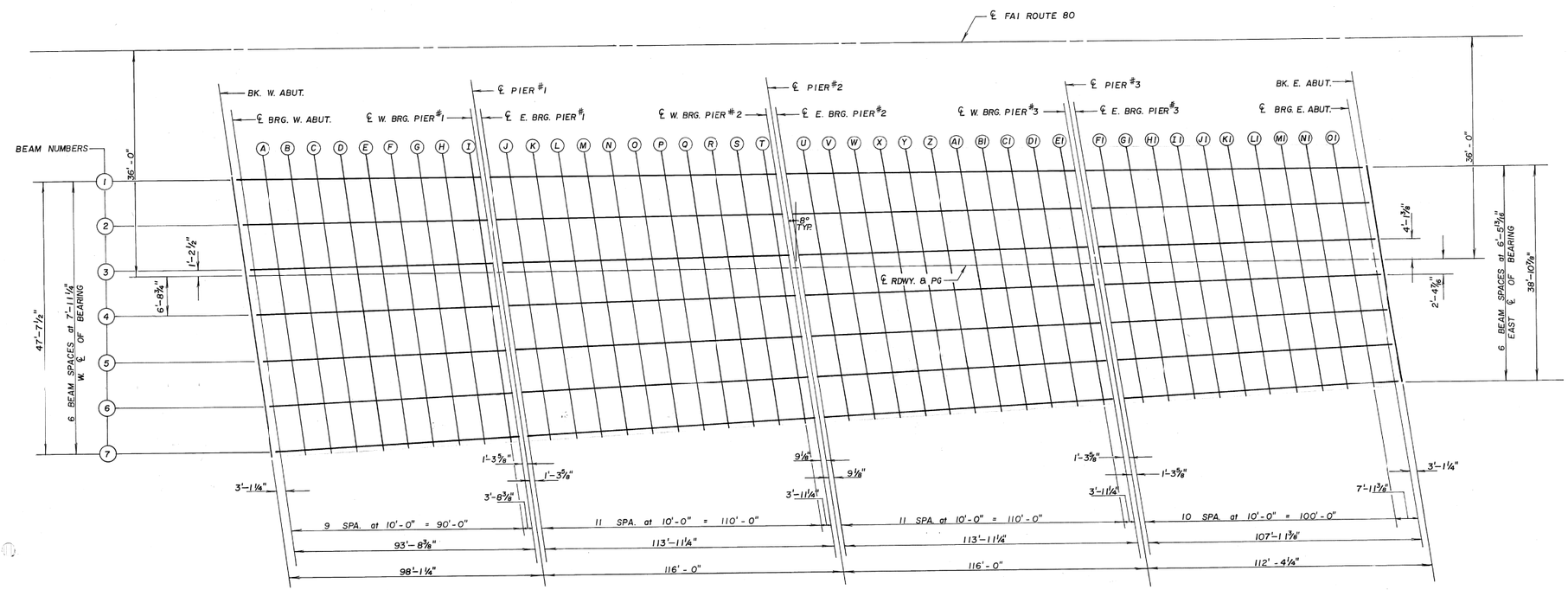

PLAN

TOP OF SLAB ELEVATION
FAI ROUTE 80 SEC(50-2) BR
LA SALLE COUNTY
STRUCTURE NO. 050-0220
STA. 672+19.43

(EASTBOUND STRUCTURE)

FOR INFORMATION ONLY

MODEL: Default
FILE NAME: \\QuiggProjects\2018\18L018 Various Structure IDOT D3 Farnsworth PTB 161-21\Work Order 14 - I-80 Roadway and other\CADD\CADD Sheets\Existing Bridge Plans\0366H21-sht-Existing Bridge Plans 0228-0229-051.dgn

QUIGG ENGINEERING INC

USER NAME = mwilson	DESIGNED -	REVISED -	
	DRAWN -	REVISED -	
PLOT SCALE = 2.0000 ' / in.	CHECKED -	REVISED -	
PLOT DATE = 10/2/2019	DATE - 10/4/2019	REVISED -	

STATE OF ILLINOIS
DEPARTMENT OF TRANSPORTATION

EXISTING STRUCTURAL PLANS
STRUCTURE NO. 050-0220/0221

SCALE: | SHEET 7 OF 42 SHEETS | STA. | TO STA.

F.A.I RTE.	SECTION	COUNTY	TOTAL SHEETS	SHEET NO.
80	50-2(HB-2)BDR(HB-1)BR(BR)BR-1	LASALLE	328	256

CONTRACT NO. 66H21

ILLINOIS | FED. AID PROJECT

FAI ROUTE NO.	SEC	COUNTY	TOTAL SHEETS	SHEET NO
80	*	LASALLE	196	132
ILLINOIS PROJECT				

BR. SHEET 6 OF 47
* (50-2)HBR-I, HB-2, BR

EASTBOUND BEAM #1				
LOCATION	STATION	OFFSET	THEORETICAL GRADE ELEVATIONS	THEORETICAL GRADE ELEVATIONS ADJUSTED FOR DEAD LOAD DEFLECTION
BK. W. ABUT.	66995.804	17.083	601.842	601.842
CL BRG. W. ABUT.	66998.909	17.083	601.749	601.749
A	67008.909	17.083	601.449	601.466
B	67018.909	17.083	601.149	601.181
C	67028.909	17.083	600.849	600.892
D	67038.909	17.083	600.549	600.598
E	67048.909	17.083	600.249	600.299
F	67058.909	17.083	599.949	599.995
G	67068.909	17.083	599.649	599.685
H	67078.909	17.083	599.351	599.374
I	67088.909	17.083	599.058	599.064
CL W. BRG. PIER #1	67092.604	17.083	598.952	598.952
CL. BRG. PIER #1	67093.909	17.083	598.915	598.915
CL E. BRG. PIER #1	67095.213	17.083	598.877	598.877
J	67105.213	17.083	598.595	598.625
K	67115.213	17.083		
L	67125.213	17.083	598.050	598.130
M	67135.213	17.083	597.787	597.883
N	67145.213	17.083	597.530	597.635
O	67155.213	17.083	597.279	597.386
P	67165.213	17.083	597.035	597.136
Q	67175.213	17.083	596.797	596.884
R	67185.213	17.083	596.565	596.631
S	67195.213	17.083	596.340	596.381
T	67205.213	17.083	596.121	596.133
CL W. BRG. PIER #2	67209.151	17.083	596.037	596.037
CL BRG. PIER #2	67209.909	17.083	596.021	596.021
CL E. BRG. PIER #2	67210.666	17.083	596.004	596.004
U	67220.666	17.083	595.795	595.823
V	67230.666	17.083	595.592	595.646
W	67240.666	17.083	595.396	595.471
X	67250.666	17.083	595.206	595.297
Y	67260.666	17.083	595.022	595.122
Z	67270.666	17.083	594.844	594.945
A1	67280.666	17.083	594.673	594.768
B1	67290.666	17.083	594.508	594.590
C1	67300.666	17.083	594.350	594.413
D1	67310.666	17.083	594.197	594.236
E1	67320.666	17.083	594.051	594.062
CL W. BRG. PIER #3	67324.604	17.083	593.996	593.996
CL BRG. PIER #3	67325.909	17.083	593.977	593.977
CL E. BRG. PIER #3	67327.213	17.083	593.959	593.959
F1	67337.213	17.083	593.824	593.847
G1	67347.213	17.083	593.695	593.739
H1	67357.213	17.083	593.572	593.632
I1	67367.213	17.083	593.455	593.527
J1	67377.213	17.083	593.345	593.423
K1	67387.213	17.083	593.241	593.318
L1	67397.213	17.083	593.144	593.214
M1	67407.213	17.083	593.052	593.109
N1	67417.213	17.083	592.967	593.007
O1	67427.213	17.083	592.889	592.907
CL BRG. E. ABUT.	67435.159	17.083	592.831	592.831
BK. E. ABUT.	67438.263	17.083	592.809	592.809

EASTBOUND BEAM #2				
LOCATION	STATION	OFFSET	THEORETICAL GRADE ELEVATIONS	THEORETICAL GRADE ELEVATIONS ADJUSTED FOR DEAD LOAD DEFLECTION
BK. W. ABUT.	66996.920	9.135	601.960	601.960
CL BRG. W. ABUT.	67000.024	9.145	601.866	601.866
A	67010.024	9.179	601.566	601.583
B	67020.024	9.212	601.265	601.297
C	67030.024	9.245	600.965	601.008
D	67040.024	9.278	600.664	600.713
E	67050.024	9.311	600.364	600.414
F	67060.024	9.344	600.063	600.109
G	67070.024	9.377	599.763	599.799
H	67080.024	9.410	599.464	599.487
I	67090.024	9.443	599.172	599.178
CL W. BRG. PIER #1	67093.676	9.458	599.067	599.067
CL. BRG. PIER #1	67094.980	9.462	599.029	599.029
CL E. BRG. PIER #1	67096.283	9.467	598.992	598.992
J	67106.283	9.500	598.710	598.740
K	67116.283	9.533	598.435	598.492
L	67126.283	9.566	598.165	598.245
M	67136.283	9.599	597.902	597.998
N	67146.283	9.632	597.645	597.750
O	67156.283	9.665	597.395	597.502
P	67166.283	9.698	597.151	597.252
Q	67176.283	9.731	596.913	597.000
R	67186.283	9.764	596.682	596.748
S	67196.283	9.797	596.457	596.498
T	67206.283	9.833	596.238	596.250
CL W. BRG. PIER #2	67210.168	9.846	596.155	596.155
CL BRG. PIER #2	67210.925	9.849	596.138	596.138
CL E. BRG. PIER #2	67211.682	9.851	596.122	596.122
U	67221.682	9.884	595.913	595.941
V	67231.682	9.917	595.711	595.765
W	67241.682	9.950	595.514	595.589
X	67251.682	9.983	595.324	595.415
Y	67261.682	10.016	595.140	595.240
Z	67271.682	10.049	594.963	595.064
A1	67281.682	10.082	594.792	594.887
B1	67291.682	10.115	594.627	594.709
C1	67301.682	10.148	594.469	594.532
D1	67311.682	10.181	594.316	594.355
E1	67321.682	10.218	594.171	594.182
CL W. BRG. PIER #3	67325.567	10.231	594.116	594.116
CL BRG. PIER #3	67326.871	10.235	594.097	594.097
CL E. BRG. PIER #3	67328.175	10.239	594.079	594.079
F1	67338.175	10.272	593.944	593.967
G1	67348.175	10.305	593.815	593.859
H1	67358.175	10.338	593.692	593.752
I1	67368.175	10.371	593.576	593.648
J1	67378.175	10.404	593.466	593.544
K1	67388.175	10.437	593.362	593.439
L1	67398.175	10.470	593.264	593.334
M1	67408.175	10.503	593.173	593.230
N1	67418.175	10.536	593.088	593.128
O1	67428.175	10.569	593.010	593.028
CL BRG. E. ABUT.	67436.070	10.598	592.952	592.952
BK. E. ABUT.	67439.174	10.609	592.931	592.931

EASTBOUND BEAM #3				
LOCATION	STATION	OFFSET	THEORETICAL GRADE ELEVATIONS	THEORETICAL GRADE ELEVATIONS ADJUSTED FOR DEAD LOAD DEFLECTION
BK. W. ABUT.	66998.036	1.187	602.050	602.050
CL BRG. W. ABUT.	67001.140	1.208	601.957	601.957
A	67011.140	1.275	601.656	601.673
B	67021.140	1.342	601.355	601.387
C	67031.140	1.409	601.054	601.097
D	67041.140	1.476	600.753	600.802
E	67051.140	1.543	600.452	600.502
F	67061.140	1.610	600.151	600.197
G	67071.140	1.677	599.850	599.886
H	67081.140	1.744	599.551	599.574
I	67091.140	1.811	599.259	599.265
CL W. BRG. PIER #1	67094.748	1.832	599.155	599.155
CL. BRG. PIER #1	67096.051	1.841	599.118	599.118
CL E. BRG. PIER #1	67097.354	1.850	599.081	599.081
J	67107.354	1.917	598.799	598.829
K	67117.354	1.984	598.523	598.580
L	67127.354	2.051	598.254	598.334
M	67137.354	2.118	597.991	598.087
N	67147.354	2.185	597.735	597.840
O	67157.354	2.252	597.484	597.591
P	67167.354	2.319	597.241	597.342
Q	67177.354	2.386	597.003	597.090
R	67187.354	2.453	596.772	596.838
S	67197.354	2.520	596.547	596.588
T	67207.354	2.587	596.328	596.340
CL W. BRG. PIER #2	67211.185	2.609	596.246	596.246
CL BRG. PIER #2	67211.942	2.614	596.230	596.230
CL E. BRG. PIER #2	67212.699	2.619	596.214	596.214
U	67222.699	2.686	596.005	596.033
V	67232.699	2.753	595.802	595.856
W	67242.699	2.820	595.606	595.681
X	67252.699	2.887	595.416	595.507
Y	67262.699	2.954	595.232	595.332
Z	67272.699	3.021	595.055	595.156
A1	67282.699	3.088	594.884	594.979
B1	67292.699	3.155	594.719	594.801
C1	67302.699	3.222	594.561	594.624
D1	67312.699	3.289	594.409	594.448
E1	67322.699	3.356	594.263	594.274
CL W. BRG. PIER #3	67326.530	3.378	594.209	594.209
CL BRG. PIER #3	67327.834	3.386	594.191	594.191
CL E. BRG. PIER #3	67329.137	3.395	594.173	594.173
F1	67339.137	3.462	594.038	594.061
G1	67349.137	3.529	593.909	593.953
H1	67359.137	3.596	593.786	593.846
I1	67369.137	3.663	593.670	593.742
J1	67379.137	3.730	593.560	593.638
K1	67389.137	3.797	593.456	593.533
L1	67399.137	3.864	593.359	593.429
M1	67409.137	3.931	593.267	593.324
N1	67419.137	3.998	593.183	593.223
O1	67429.137	4.065	593.104	593.122
CL BRG. E. ABUT.	67436.981	4.115	593.047	593.047
BK. E. ABUT.	67440.085	4.136	593.026	593.026

EASTBOUND CENTERLINE ROADWAY & P.G.				
LOCATION	STATION	OFFSET	THEORETICAL GRADE ELEVATIONS	THEORETICAL GRADE ELEVATIONS ADJUSTED FOR DEAD LOAD DEFLECTION
BK. W. ABUT.	66998.200	0.000	602.064	602.064
CL BRG. W. ABUT.	67001.304	0.000	601.970	601.971
A	67011.304	0.000	601.670	601.688
B	67021.304	0.000	601.370	601.403
C	67031.304	0.000	601.070	601.114
D	67041.304	0.000	600.770	600.820
E	67051.304	0.000	600.470	600.521
F	67061.304	0.000	600.170	600.217
G	67071.304	0.000	599.870	599.907
H	67081.304	0.000	599.573	599.596
I	67091.304	0.000	599.282	599.289
CL W. BRG. PIER #1	67095.002	0.000	599.176	599.177
CL. BRG. PIER #1	67096.310	0.000	599.139	599.139
CL E. BRG. PIER #1	67097.606	0.000	599.102	599.103
J	67107.606	0.000	598.821	598.852
K	67117.606	0.000	598.547	598.604
L	67127.606	0.000	598.279	598.360
M	67137.606	0.000	598.017	598.114
N	67147.606	0.000	597.762	597.868
O	67157.606	0.000	597.513	597.620
P	67167.606	0.000	597.270	597.372
Q	67177.606	0.000	597.034	597.121
R	67187.606	0.000	596.804	596.870
S	67197.606	0.000	596.580	596.622
T	67207.606	0.000	596.363	596.375
CL W. BRG. PIER #2	67211.544	0.000	596.279	596.279
CL BRG. PIER #2	67212.304	0.000	596.263	596.263
CL E. BRG. PIER #2	67213.064	0.000	596.247	596.247
U	67223.064	0.000	596.039	596.336
V	67233.064	0.000	595.838	595.892
W	67243.064	0.000	595.643	595.718
X	67253.064	0.000	595.454	595.545
Y	67263.064	0.000	595.272	595.372
Z	67273.064	0.000	595.096	595.197
A1	67283.064	0.000	594.926	595.021
B1	67293.064	0.000	594.762	594.845
C1	67303.064	0.000	594.605	594.669
D1	67313.064	0.000	594.455	594.494
E1	67323.064	0.000	594.310	594.322
CL W. BRG. PIER #3	67327.002	0.000	594.255	594.255
CL BRG. PIER #3	67328.304	0.000	594.237	594.237
CL E. BRG. PIER #3	67329.606	0.000	594.219	594.220
F1	67339.606	0.000	594.085	594.108
G1	67349.606	0.000	593.957	594.002
H1	67359.606	0.000	593.836	593.894
I1	67369.606	0.000	593.721	593.794
J1	67379.606	0.000	593.612	593.691
K1	67389.606	0.000	593.510	593.588
L1	67399.606	0.000	593.414	593.485
M1	67409.606	0.000	593.324	593.382
N1	67419.606	0.000	593.241	593.281
O1	67429.606	0.000	593.164	593.182
CL BRG. E. ABUT.	67437.554	0.000	593.107	593.108
BK. E. ABUT	67440.658	0.000	593.086	593.086

TOP OF SLAB ELEVATIONS
F.A.I. ROUTE 80 SEC. (50-2)BR
LASALLE COUNTY
STR. NO. 050-0220
STA. 672+19.43
(EASTBOUND STRUCTURE)

FOR INFORMATION ONLY

MODEL: Default
FILE NAME: \\QuiggProjects\2018\18IL018 Various Structure IDOT D3 Farnsworth PTB 161-21\Work Order 14 - I-80 Roadway and other\CADD\CADD Sheets\Existing Bridge Plans\D366172-sht-Existing Bridge Plans 0228-0229-052.dgn

QUIGG ENGINEERING INC

USER NAME = mwilson	DESIGNED -	REVISED -	
	DRAWN -	REVISED -	
PLOT SCALE = 2.0000 ' / in.	CHECKED -	REVISED -	
PLOT DATE = 10/2/2019	DATE - 10/4/2019	REVISED -	

STATE OF ILLINOIS
DEPARTMENT OF TRANSPORTATION

EXISTING STRUCTURAL PLANS
STRUCTURE NO. 050-0220/0221

SCALE: SHEET 8 OF 42 SHEETS STA. TO STA.

F.A.I RTE.	SECTION	COUNTY	TOTAL SHEETS	SHEET NO.
80	50-2(HB-2)BDR(HB-1)BR(BR)BR-1	LASALLE	328	257
		CONTRACT NO. 66H21		
		ILLINOIS	FED. AID PROJECT	

FAI ROUTE NO.	SEC	COUNTY	TOTAL SHEETS	SHEET NO
80	*	LASALLE	196	133
ILLINOIS PROJECT				

BR SHEET 7 OF 47

* (50-2)HBR-I, HB-2, BR

EASTBOUND BEAM #4

LOCATION	STATION	OFFSET	THEORETICAL GRADE ELEVATIONS	THEORETICAL GRADE ELEVATIONS ADJUSTED FOR DEAD LOAD DEFLECTION
BK. W. ABUT.	66999.151	6.760	601.929	601.929
CL BRG. W. ABUT.	67002.255	6.729	601.837	601.837
A	67012.255	6.629	601.539	601.556
B	67022.255	6.529	601.240	601.272
C	67032.255	6.429	600.942	600.985
D	67042.255	6.329	600.643	600.692
E	67052.255	6.229	600.345	600.395
F	67062.255	6.129	600.046	600.092
G	67072.255	6.029	599.748	599.784
H	67082.255	5.929	599.453	599.476
I	67092.255	5.829	599.164	599.170
CL W. BRG. PIER #1	67095.819	5.793	599.062	599.062
CL. BRG. PIER #1	67097.122	5.780	599.026	599.026
CL E. BRG. PIER #1	67098.424	5.767	598.989	598.989
J	67108.424	5.667	598.710	598.740
K	67118.424	5.567	598.438	598.495
L	67128.424	5.467	598.172	598.252
M	67138.424	5.367	597.913	598.009
N	67148.424	5.267	597.660	597.765
O	67158.424	5.167	597.413	597.520
P	67168.424	5.067	597.172	597.273
Q	67178.424	4.967	596.938	597.025
R	67188.424	4.867	596.710	596.776
S	67198.424	4.767	596.488	596.529
T	67208.424	4.667	596.273	596.285
CL W. BRG. PIER #2	67212.203	4.628	596.193	596.193
CL BRG. PIER #2	67212.959	4.621	596.177	596.177
CL E. BRG. PIER #2	67213.715	4.613	596.161	596.161
U	67223.715	4.513	595.955	595.983
V	67233.715	4.413	595.756	595.810
W	67243.715	4.313	595.563	595.638
X	67253.715	4.213	595.376	595.467
Y	67263.715	4.113	595.196	595.296
Z	67273.715	4.013	595.022	595.123
A1	67283.715	3.913	594.854	594.949
B1	67293.715	3.813	594.692	594.774
C1	67303.715	3.713	594.538	594.601
D1	67313.715	3.613	594.389	594.428
E1	67323.715	3.513	594.246	594.257
CL W. BRG. PIER #3	67327.493	3.474	594.194	594.194
CL BRG. PIER #3	67328.796	3.461	594.231	594.231
CL E. BRG. PIER #3	67330.099	3.448	594.159	594.159
F1	67340.099	3.348	594.027	594.050
G1	67350.099	3.248	593.901	593.945
H1	67360.099	3.148	593.782	593.842
I1	67370.099	3.048	593.668	593.740
J1	67380.099	2.948	593.562	593.640
K1	67390.099	2.848	593.461	593.538
L1	67400.099	2.748	593.367	593.437
M1	67410.099	2.648	593.279	593.336
N1	67420.099	2.548	593.198	593.238
O1	67430.099	2.448	593.122	593.140
CL BRG. E. ABUT.	67437.893	2.370	593.068	593.068
BK. E. ABUT.	67440.997	2.339	593.048	593.048

EASTBOUND BEAM #5

LOCATION	STATION	OFFSET	THEORETICAL GRADE ELEVATIONS	THEORETICAL GRADE ELEVATIONS ADJUSTED FOR DEAD LOAD DEFLECTION
BK. W. ABUT.	67000.267	14.708	601.758	601.758
CL BRG. W. ABUT.	67003.371	14.667	601.666	601.666
A	67013.371	14.534	601.369	601.386
B	67023.371	14.400	601.071	601.103
C	67033.371	14.267	600.774	600.817
D	67043.371	14.133	600.477	600.526
E	67053.371	14.000	600.180	600.230
F	67063.371	13.866	599.883	599.929
G	67073.371	13.733	599.585	599.621
H	67083.371	13.599	599.292	599.315
I	67093.371	13.466	599.005	599.011
CL W. BRG. PIER #1	67096.891	13.419	598.906	598.906
CL. BRG. PIER #1	67098.193	13.418	598.869	598.869
CL E. BRG. PIER #1	67099.495	13.384	598.833	598.833
J	67109.495	13.250	598.556	598.586
K	67119.495	13.117	598.286	598.343
L	67129.495	12.983	598.022	598.102
M	67139.495	12.850	597.764	597.860
N	67149.495	12.716	597.513	597.618
O	67159.495	12.583	597.267	597.374
P	67169.495	12.449	597.029	597.130
Q	67179.495	12.316	596.796	596.883
R	67189.495	12.182	596.570	596.656
S	67199.495	12.049	596.450	596.491
T	67209.495	11.915	596.137	596.149
CL W. BRG. PIER #2	67213.220	11.865	596.058	596.058
CL BRG. PIER #2	67213.976	11.855	596.043	596.043
CL E. BRG. PIER #2	67214.732	11.845	596.027	596.027
U	67224.732	11.712	595.822	595.850
V	67234.732	11.578	595.624	595.678
W	67244.732	11.445	595.432	595.507
X	67254.732	11.311	595.247	595.338
Y	67264.732	11.178	595.068	595.168
Z	67274.732	11.044	594.894	594.995
A1	67284.732	10.911	594.728	594.823
B1	67294.732	10.777	594.568	594.650
C1	67304.732	10.644	594.414	594.477
D1	67314.732	10.510	594.266	594.305
E1	67324.732	10.377	594.125	594.136
CL W. BRG. PIER #3	67328.457	10.327	594.074	594.074
CL BRG. PIER #3	67329.758	10.310	594.056	594.056
CL E. BRG. PIER #3	67331.060	10.292	594.039	594.039
F1	67341.060	10.159	593.908	593.931
G1	67351.060	10.025	593.783	593.827
H1	67361.060	9.892	593.664	593.724
I1	67371.060	9.758	593.553	593.625
J1	67381.060	9.625	593.447	593.525
K1	67391.060	9.491	593.348	593.425
L1	67401.060	9.358	593.255	593.325
M1	67411.060	9.224	593.168	593.225
N1	67421.060	9.091	593.088	593.128
O1	67431.060	8.957	593.014	593.032
CL BRG. E. ABUT.	67438.804	8.854	592.961	592.961
BK. E. ABUT.	67441.908	8.813	592.940	592.940

EASTBOUND BEAM #6

LOCATION	STATION	OFFSET	THEORETICAL GRADE ELEVATIONS	THEORETICAL GRADE ELEVATIONS ADJUSTED FOR DEAD LOAD DEFLECTION
BK. W. ABUT.	67001.382	22.656	601.559	601.559
CL BRG. W. ABUT.	67004.486	22.604	601.467	601.467
A	67014.486	22.437	601.170	601.187
B	67024.486	22.270	600.874	600.906
C	67034.486	22.103	600.577	600.620
D	67044.486	21.936	600.281	600.330
E	67054.486	21.769	599.984	600.034
F	67064.486	21.602	599.687	599.733
G	67074.486	21.435	599.392	599.428
H	67084.486	21.268	599.099	599.122
I	67094.486	21.101	598.814	598.820
CL W. BRG. PIER #1	67097.963	21.044	598.716	598.716
CL. BRG. PIER #1	67099.264	21.022	598.681	598.681
CL E. BRG. PIER #1	67100.565	21.000	598.644	598.644
J	67110.565	20.833	598.368	598.398
K	67120.565	20.666	598.100	598.157
L	67130.565	20.499	597.836	597.916
M	67140.565	20.332	597.580	597.676
N	67150.565	20.165	597.330	597.435
O	67160.565	19.998	597.087	597.194
P	67170.565	19.831	596.849	596.950
Q	67180.565	19.664	596.618	596.705
R	67190.565	19.498	596.393	596.459
S	67200.565	19.331	596.175	596.216
T	67210.565	19.164	595.963	595.975
CL W. BRG. PIER #2	67214.237	19.102	595.887	595.887
CL BRG. PIER #2	67214.992	19.090	595.871	595.871
CL E. BRG. PIER #2	67215.748	19.077	595.856	595.856
U	67225.748	18.910	595.654	595.682
V	67235.748	18.743	595.457	595.511
W	67245.748	18.576	595.267	595.342
X	67255.748	18.409	595.084	595.175
Y	67265.748	18.242	594.906	595.006
Z	67275.748	18.075	594.736	594.837
A1	67285.748	17.908	594.571	594.666
B1	67295.748	17.741	594.413	594.495
C1	67305.748	17.574	594.261	594.324
D1	67315.748	17.408	594.115	594.154
E1	67325.748	17.241	593.976	593.987
CL W. BRG. PIER #3	67329.420	17.180	593.927	593.927
CL BRG. PIER #3	67330.721	17.158	593.909	593.909
CL E. BRG. PIER #3	67332.022	17.136	593.893	593.893
F1	67342.022	16.969	593.763	593.786
G1	67352.022	16.802	593.640	593.596
H1	67362.022	16.635	593.524	593.584
I1	67372.022	16.468	593.414	593.486
J1	67382.022	16.301	593.311	593.389
K1	67392.022	16.134	593.213	593.290
L1	67402.022	15.967	593.122	593.192
M1	67412.022	15.800	593.037	593.094
N1	67422.022	15.633	592.959	592.999
O1	67432.022	15.466	592.887	592.905
CL BRG. E. ABUT.	67439.715	15.338	592.836	592.836
BK. E. ABUT.	67442.819	15.287	592.816	592.816

EASTBOUND BEAM #7

LOCATION	STATION	OFFSET	THEORETICAL GRADE ELEVATIONS	THEORETICAL GRADE ELEVATIONS ADJUSTED FOR DEAD LOAD DEFLECTION
BK. W. ABUT.	67002.498	30.604	601.350	601.360
CL BRG. W. ABUT.	67005.602	30.542	601.258	601.268
A	67015.602	30.342	600.972	600.989
B	67025.602	30.142	600.677	600.709
C	67035.602	29.941	600.381	600.424
D	67045.602	29.740	600.085	600.134
E	67055.602	29.540	599.789	599.839
F	67065.602	29.339	599.493	599.539
G	67075.602	29.139	599.197	599.233
H	67085.602	28.939	598.908	598.931
I	67095.602	28.738	598.623	598.629
CL W. BRG. PIER #1	67099.034	28.669	598.527	598.527
CL. BRG. PIER #1	67100.335	28.643	598.491	598.491
CL E. BRG. PIER #1	67101.636	28.617	598.455	598.455
J	67111.636	28.417	598.181	598.211
K	67121.636	28.216	597.914	597.971
L	67131.636	28.016	597.652	597.732
M	67141.636	27.815	597.397	597.493
N	67151.636	27.615	597.148	597.253
O	67161.636	27.414	596.906	597.013
P	67171.636	27.214	596.671	596.772
Q	67181.636	27.014	596.441	596.528
R	67191.636	26.813	596.217	596.283
S	67201.636	26.613	596.000	596.041
T	67211.636	26.412	595.789	595.801
CL W. BRG. PIER #2	67215.254	26.340	595.715	595.715
CL BRG. PIER #2	67216.009	26.325	595.699	595.699
CL E. BRG. PIER #2	67216.764	26.310	595.684	595.684
U	67226.764	26.110	595.483	595.511
V	67236.764	25.909	595.288	595.342
W	67246.764	25.709	595.099	595.174
X	67256.764	25.508	594.917	595.008
Y	67266.764	25.308	594.741	594.841
Z	67276.764	25.107	594.571	594.672
A1	67286.764	24.907	594.409	594.504
B1	67296.764	24.707	594.252	594.334
C1	67306.764	24.506	594.101	594.164
D1	67316.764	24.306	593.957	593.996
E1	67326.764	24.105	593.819	593.830
CL W. BRG. PIER #3	67330.383	24.033	593.771	593.771
CL BRG. PIER #3	67331.683	24.007	593.753	593.753
CL E. BRG. PIER #3	67332.984	23.981	593.736	593.736
F1	67342.984	23.781	593.609	593.632
G1	67352.984	23.580	593.487	593.531
H1	67362.984	23.380	593.372	593.432
I1	67372.984	23.179	593.264	593.336
J1	67382.984	22.979	593.162	593.240
K1	67392.984	22.778	593.065	593.142
L1	67402.984	22.578	592.975	593.045
M1	67412.984	22.377	592.892	592.949
N1	67422.984	22.177	592.815	592.855
O1	67432.984	21.977	592.744	592.762
CL BRG. E. ABUT.	67440.627	21.823	592.695	592.695
BK. E. ABUT.	67443.731	21.761	592.675	592.675

TOP OF SLAB ELEVATIONS
F.A.I. ROUTE 80 SEC. (50-2)BR
LASALLE COUNTY
STR. NO. 050-0220
STA. 672+19.43
(EASTBOUND STRUCTURE)

FOR INFORMATION ONLY

MODEL: Default
FILE NAME: \\QuiggProjects2018\18\018 Various Structure IDOT D3 Farnsworth PTB 161-21\Work Order 14 - I-80 Roadway and other\CADD\CADD Sheets\Existing Bridge Plans\D366121-sht-Existing Bridge Plans 0228-0229-053.dgn

QUIGG ENGINEERING INC

USER NAME = mwilson	DESIGNED -	REVISED -	
	DRAWN -	REVISED -	
PLOT SCALE = 2.0000 ' / in.	CHECKED -	REVISED -	
PLOT DATE = 10/2/2019	DATE - 10/4/2019	REVISED -	

STATE OF ILLINOIS
DEPARTMENT OF TRANSPORTATION

EXISTING STRUCTURAL PLANS
STRUCTURE NO. 050-0220/0221

SCALE: | SHEET 9 OF 42 SHEETS | STA. | TO STA.

F.A.I RTE.	SECTION	COUNTY	TOTAL SHEETS	SHEET NO.
80	50-2(HB-2)BDR(HB-1)BR(BR)BR-1	LASALLE	328	258
		CONTRACT NO. 66H21		
	ILLINOIS	FED. AID PROJECT		

F.A.I. ROUTE NO.	SEC	COUNTY	TOTAL SHEETS	SHEET NO.
80	*	LASALLE	196	134

ILLINOIS PROJECT

BR. SHEET 8 OF 47
* (50-2)HBR-1, HB-2, BR

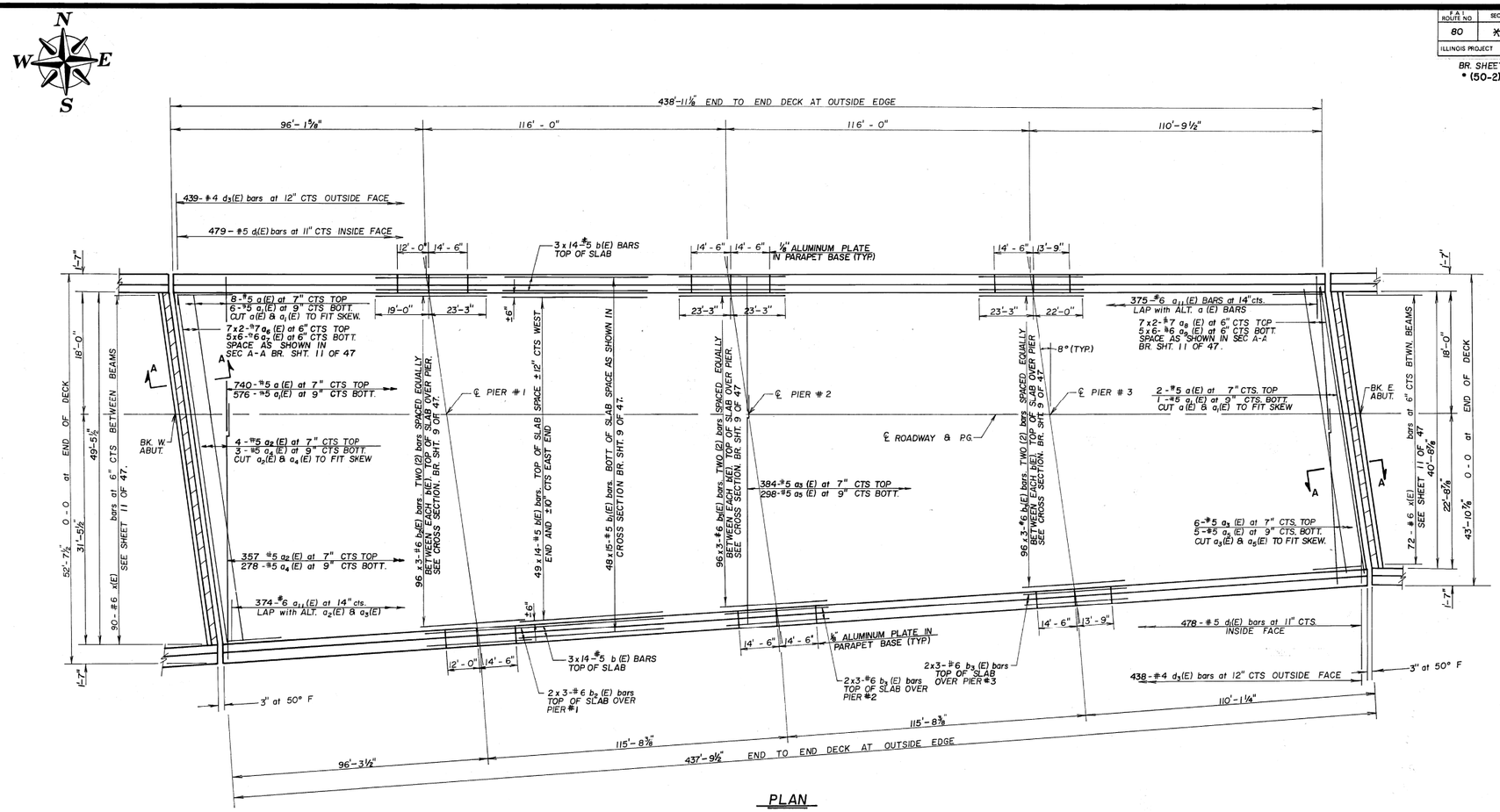

PLAN

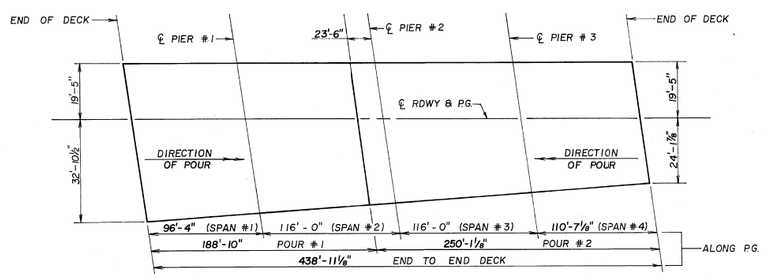

POURING SEQUENCE DETAIL

NOTES: WHEN THE DECK POUR IS STOPPED FOR THE DAY AT THE TRANSVERSE BONDED CONSTRUCTION JOINT IN THE DECK POURING SEQUENCE AS SHOWN, THE NEXT POUR SHALL NOT BE MADE UNTIL BOTH OF THE FOLLOWING REQUIREMENTS ARE MET:

1. AT LEAST 72 HOURS SHALL HAVE ELAPSED FROM THE END OF THE PREVIOUS POUR.
2. THE CONCRETE STRENGTH SHALL HAVE ATTAINED A MINIMUM MODULUS OF RUPTURE OF 650 P.S.I. OR A MINIMUM COMPRESSIVE STRENGTH OF 3500 P.S.I.

THE CONTRACTOR, AS AN ALTERNATIVE TO THE POURING SEQUENCE MAY POUR THE DECK SIMULTANEOUSLY FROM EACH END OF THE BRIDGE.

BAR LAPS

#5 BAR = 2'-2"
#6 BAR = 2'-7"
#7 BAR = 3'-5"

NOTES: SEE SHEET #9 & #10 OF 47 FOR SUPERSTRUCTURE DETAILS AND BILL OF MATERIAL.

SEE SHEET # 11 OF 47 FOR SECTIONS AT ABUTMENTS AND PIERS.

SEE SHEET #1 OF 47 FOR DRAINAGE SCRUPPER SPACING.

SEE SHEETS #10, 42, 43 OF 47 FOR DRAINAGE SCRUPPER DETAILS.

REINFORCEMENT BARS DESIGNATED (E) SHALL BE EPOXY COATED.

BARS INDICATED THUS 20 x 3 - #5 ETC. INDICATES 20 LINES OF BARS WITH 3 LENGTHS PER LINE.

CUT LONGITUDINAL REINFORCEMENT BARS TO CLEAR DRAINAGE SCUPPERS.

SUPERSTRUCTURE
FAI ROUTE 80 SEC(50-2) BR
LA SALLE COUNTY
STRUCTURE NO. 050-0220
STA. 672+19.43

(EASTBOUND STRUCTURE)

FOR INFORMATION ONLY

MODEL: Default
FILE NAME: \\QuiggProjects\2018\18L018 Various Structure IDOT D3 Farnsworth PTB 161-2\Work Order 14 - I-80 Roadway and other\CADD\CADD Sheets\Existing Bridge Plans\D366H21-sht-Existing Bridge Plans 0228-0229-054.dgn

QUIGG ENGINEERING INC

USER NAME = mwilson	DESIGNED -	REVISED -	
	DRAWN -	REVISED -	
PLOT SCALE = 2.0000 ' / in.	CHECKED -	REVISED -	
PLOT DATE = 10/2/2019	DATE - 10/4/2019	REVISED -	

STATE OF ILLINOIS
DEPARTMENT OF TRANSPORTATION

EXISTING STRUCTURAL PLANS
STRUCTURE NO. 050-0220/0221

SCALE: | SHEET 10 OF 42 SHEETS | STA. TO STA.

F.A.I RTE.	SECTION	COUNTY	TOTAL SHEETS	SHEET NO.
80	50-2(HB-2)BDR(HB-1)BR(BR)BR-1	LASALLE	328	259

CONTRACT NO. 66H21

ILLINOIS | FED. AID PROJECT

F.A.I. ROUTE NO	SEC	COUNTY	TOTAL SHEETS	SHEET NO
80	*	LASALLE	196	135

ILLINOIS PROJECT

BR. SHEET 9 OF 47
* (50-2)HBR-1, HB-2, BR

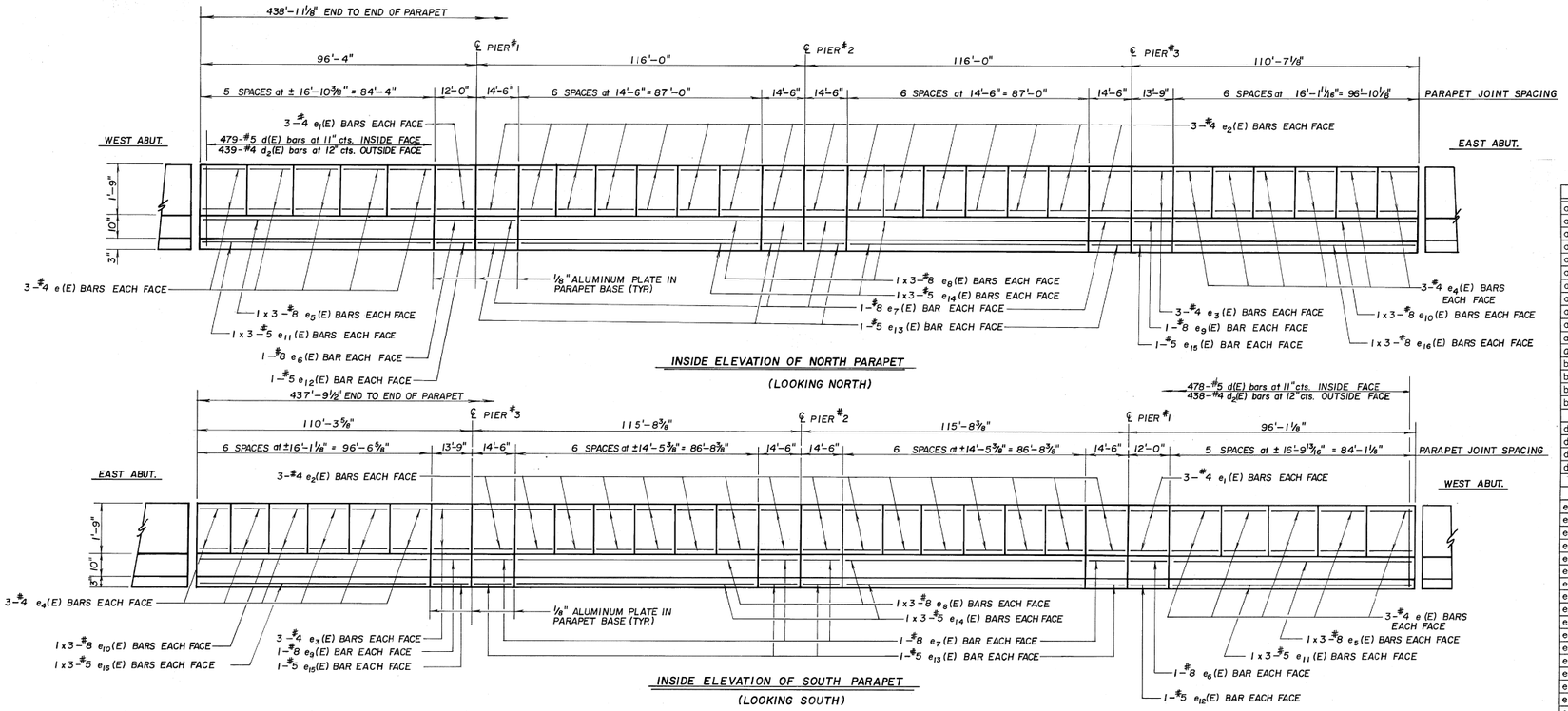

INSIDE ELEVATION OF NORTH PARAPET
(LOOKING NORTH)

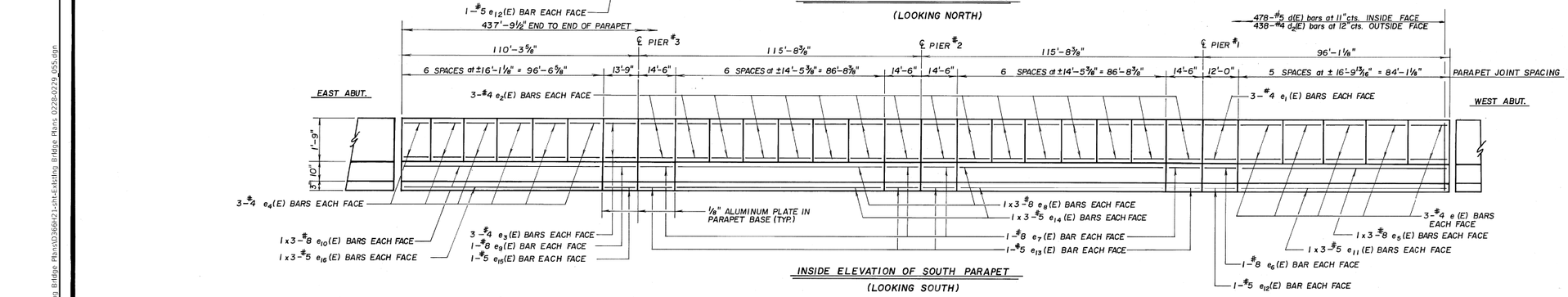

INSIDE ELEVATION OF SOUTH PARAPET
(LOOKING SOUTH)

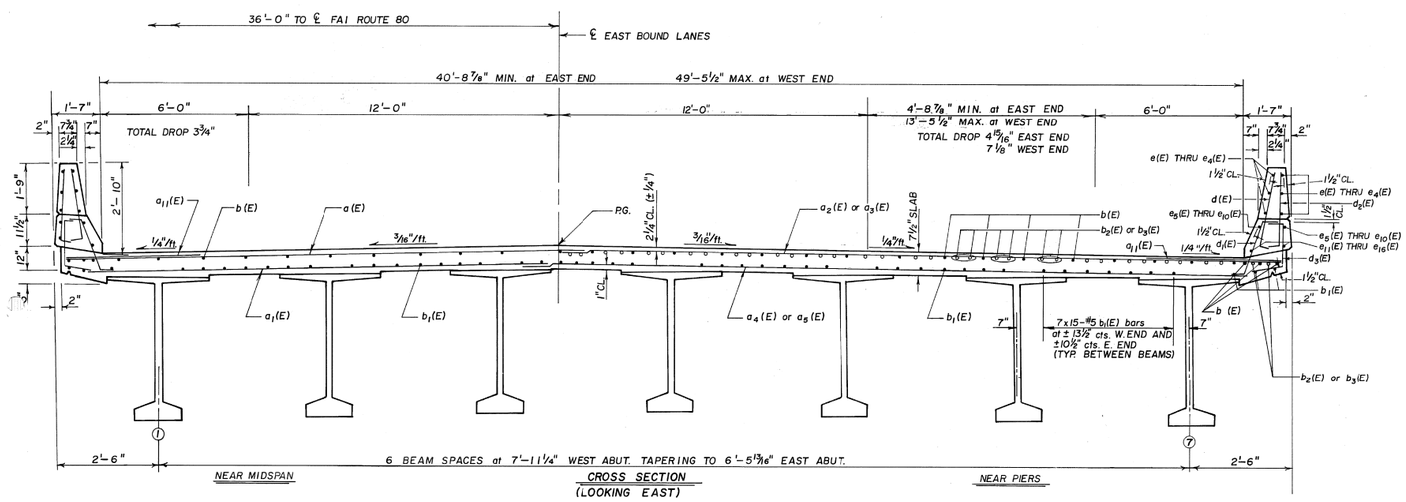

CROSS SECTION
(LOOKING EAST)

BAR LAPS

#5 BAR = 2'-2"
#8 BAR = 4'-6"

SUPERSTRUCTURE BILL OF MATERIAL

BAR	NO.	SIZE	LENGTH	SHAPE
a(E)	750	#5	20'-6"	
a1(E)	583	#5	18'-6"	
a2(E)	361	#5	34'-0"	
a3(E)	390	#5	29'-9"	
a4(E)	281	#5	36'-0"	
a5(E)	303	#5	31'-9"	
a6(E)	14	#7	27'-9"	
a7(E)	30	#6	6'-9"	
a8(E)	14	#7	23'-4"	
a9(E)	30	#6	5'-3"	
a10(E)	120	#5	2'-0"	
a11(E)	743	#6	4'-0"	
b(E)	770	#5	33'-4"	
b1(E)	720	#5	31'-3"	
b2(E)	300	#6	16'-1"	
b3(E)	600	#6	17'-5"	
d(E)	957	#5	3'-0"	L
d1(E)	957	#5	2'-7"	
d2(E)	877	#4	3'-0"	L
d3(E)	877	#4	2'-7"	
e(E)	60	#4	16'-7"	
e1(E)	12	#4	11'-9"	
e2(E)	192	#4	14'-3"	
e3(E)	12	#4	13'-6"	
e4(E)	72	#4	15'-10"	
e5(E)	12	#8	31'-0"	
e6(E)	4	#8	11'-9"	
e7(E)	16	#8	14'-3"	
e8(E)	24	#8	31'-11"	
e9(E)	4	#8	13'-6"	
e10(E)	12	#8	35'-2"	
e11(E)	12	#5	29-5"	
e12(E)	4	#5	11'-9"	
e13(E)	16	#5	14'-3"	
e14(E)	24	#5	30'-4"	
e15(E)	4	#5	13'-6"	
e16(E)	12	#5	33'-8"	
m(E)	48	#4	6'-11"	
m1(E)	48	#4	6'-2"	
m2(E)	15	#8	6'-2"	
m3(E)	12	#6	5'-3"	
m4(E)	12	#6	4'-6"	
m5(E)	48	#4	6'-6"	
m6(E)	12	#6	4'-10"	
m7(E)	6	#8	4'-2"	
s7(E)	54	#4	15'-2"	
s8(E)	30	#4	15'-9"	
x(E)	162	#6	7'-5"	
CONCRETE SUPERSTRUCTURES			CU. YD.	792.9
REINFORCEMENT BARS (EPOXY COATED)			LBS.	175830

REINFORCEMENT BARS DESIGNATED (E) SHALL BE EPOXY COATED.

BARS INDICATED THUS 20 x 3 - #5 ETC. INDICATES 20 LINES OF BARS WITH 3 LENGTHS PER LINE.

SUPERSTRUCTURE DETAILS
FAI ROUTE 80 SEC(50-2) BR
LA SALLE COUNTY
STRUCTURE NO. 050-0220
STA. 672+19.43

(EASTBOUND STRUCTURE)

FOR INFORMATION ONLY

MODEL: Default
FILE NAME: \\QuiggProjects\2018\18L018 Various Structure IDOT D3 Farnsworth PTB 161-21\Work Order 14 - I-80 Roadway and other\CADD\CADD Sheets\Existing Bridge Plans\D366H21-sht-Existing Bridge Plans 0228-0229 055.dgn

QUIGG ENGINEERING INC

USER NAME = mwilson	DESIGNED -	REVISED -	
	DRAWN -	REVISED -	
PLOT SCALE = 2.0000 ' / in.	CHECKED -	REVISED -	
PLOT DATE = 10/2/2019	DATE - 10/4/2019	REVISED -	

STATE OF ILLINOIS
DEPARTMENT OF TRANSPORTATION

EXISTING STRUCTURAL PLANS
STRUCTURE NO. 050-0220/0221

SCALE: | SHEET 11 OF 42 SHEETS | STA. | TO STA.

F.A.I RTE.	SECTION	COUNTY	TOTAL SHEETS	SHEET NO.
80	50-2(HB-2)BDR(HB-1)BR(BR)BR-1	LASALLE	328	260
		CONTRACT NO. 66H21		
	ILLINOIS	FED. AID PROJECT		

F.A.I. ROUTE NO.	SEC	COUNTY	TOTAL SHEETS	SHEET NO.
80	*	LASALLE	196	136

ILLINOIS PROJECT

BR. SHEET 10 OF 47
* (50-2)HBR-1, HB-2, BR

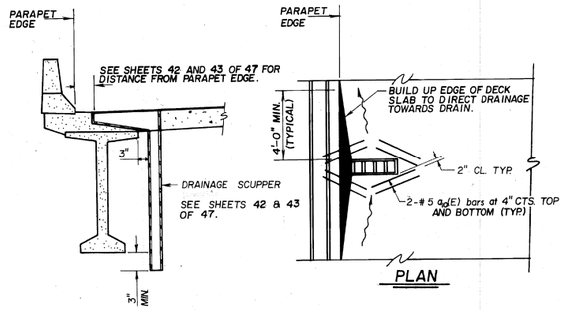

SECTION AT DRAINAGE SCUPPER

PLAN

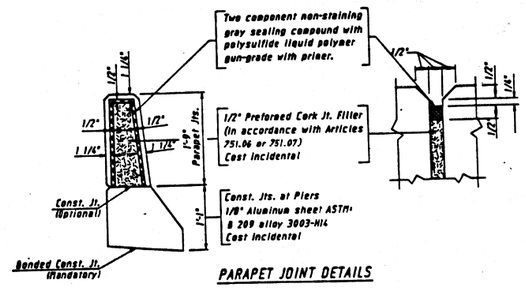

PARAPET JOINT DETAILS

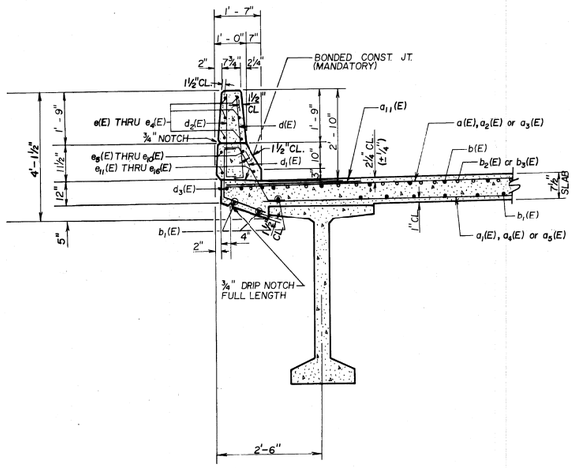

SECTION THRU PARAPET

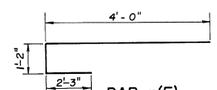

BAR x(E)

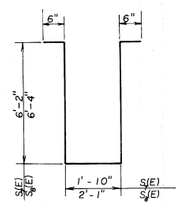

BAR s_7(E) & s_6(E)

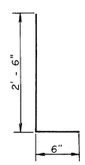

BARS d(E) & d_2(E)

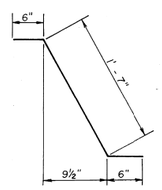

BAR d_1(E)

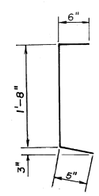

BAR d_3(E)

SUPERSTRUCTURE DETAILS
FAI ROUTE 80 SEC(50-2) BR
LA SALLE COUNTY
STRUCTURE NO. 050-0220
STA. 672+19.43

(EASTBOUND STRUCTURE)

FOR INFORMATION ONLY

MODEL: Default
FILE NAME: \QuiggProjects\2018\18L018 Various Structure IDOT D3 Farnsworth PTB 161-21\Work Order 14 - I-80 Roadway and other\CADD\CADD Sheets\Existing Bridge Plans\D366H21-sht-Existing Bridge Plans 0228-0229-056.dgn

QUIGG ENGINEERING INC

USER NAME = mwilson	DESIGNED -	REVISED -	
	DRAWN -	REVISED -	
PLOT SCALE = 2.0000 ' / in.	CHECKED -	REVISED -	
PLOT DATE = 10/2/2019	DATE - 10/4/2019	REVISED -	

STATE OF ILLINOIS
DEPARTMENT OF TRANSPORTATION

EXISTING STRUCTURAL PLANS
STRUCTURE NO. 050-0220/0221

SCALE: | SHEET 12 OF 42 SHEETS | STA. | TO STA.

F.A.I RTE.	SECTION	COUNTY	TOTAL SHEETS	SHEET NO.
80	50-2(HB-2)BDR(HB-1)BR(BR)BR-1	LASALLE	328	261
		CONTRACT NO. 66H21		
	ILLINOIS	FED. AID PROJECT		

F.A.I. ROUTE NO	SEC	COUNTY	TOTAL SHEETS	SHEET NO
80	*	LASALLE	196	137
ILLINOIS PROJECT				

BR. SHEET 11 OF 47

* (50-2)HBR-1, HB-2, BR

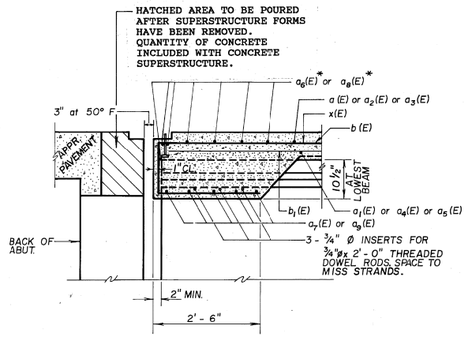

SEC A-A

(AT RIGHT ANGLE TO ℄ ABUTMENT)

*PLACE $a_6(E)$ OR $a_8(E)$ BARS IN BACK OF ANCHOR BOLT AS SHOWN IF REQUIRED TO MAINTAIN 1" CL. (+0 - ½"). ANCHOR BOLTS SHOULD BE TIED TO $a_6(E)$ & $a_8(E)$ BARS.

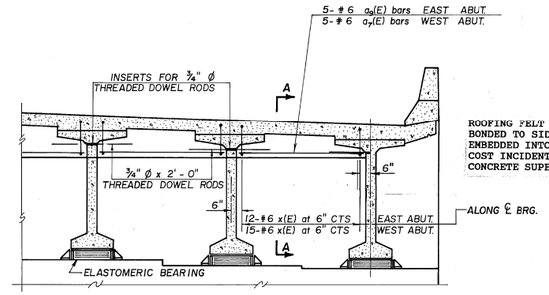

DIAPHRAGM AT ABUTMENTS

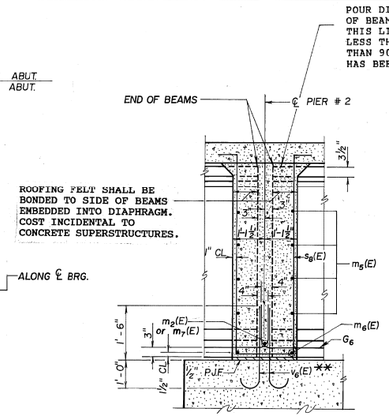

SEC C-C

(AT RIGHT ANGLE TO ℄ PIER #2)

SEE DETAIL "A" ON SHEET 14 OF 47.

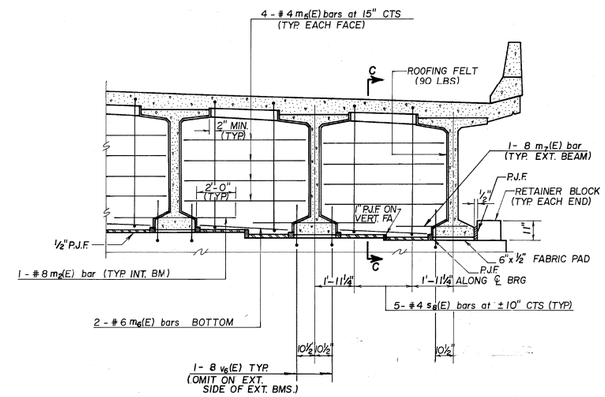

DIAPHRAGM AT PIER # 2

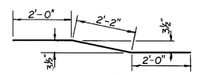

BAR $m_2(E)$

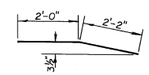

BAR $m_7(E)$

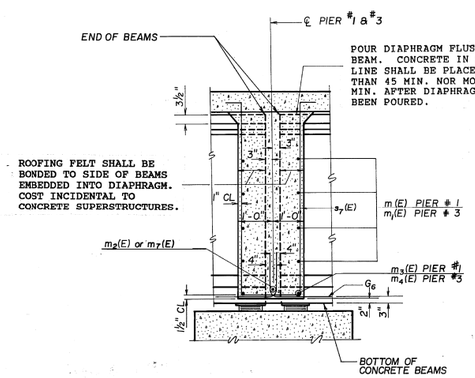

SEC B-B

(AT RIGHT ANGLE TO ℄ PIER #1 & #3)

SEE DETAIL "A" ON SHEETS 13, 14, AND 15 OF 47.

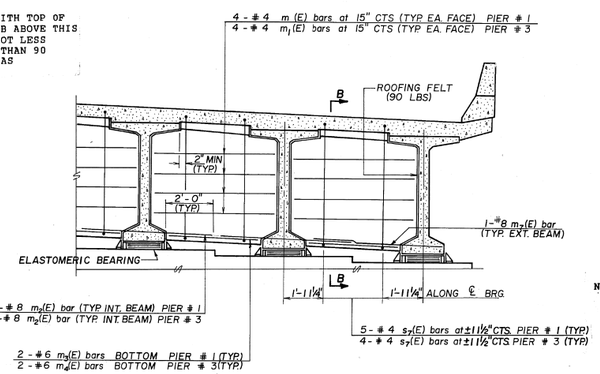

DIAPHRAGM AT PIERS # 1 & # 3

FORM BOTTOM OF DIAPHRAGMS TO CLEAR SIDE RETAINERS.

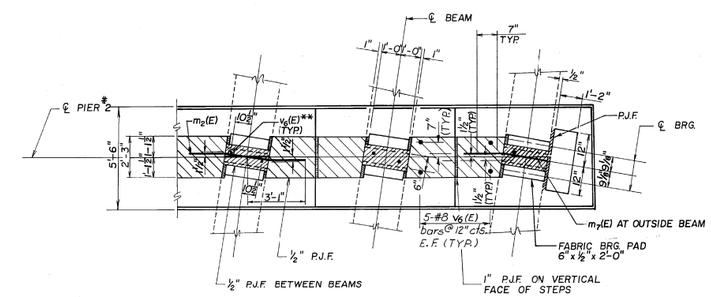

PARTIAL PLAN AT PIER # 2

NOTES: REINFORCEMENT BARS SHOWN ON THIS SHEET ARE INCLUDED IN BILL OF MATERIAL ON SHEET #9 OF 47.

CONCRETE IN DIAPHRAGMS IS INCLUDED WITH "CONCRETE SUPERSTRUCTURES" ON SHEET #9 OF 47.

FOR NEOPRENE EXPANSION JOINT DETAILS SEE SHEET #41 OF 47.

FOR DETAILS OF $s_7(E)$, $s_8(E)$, & x(E) BARS SEE SHEET #10 OF 47.

** BARS INCLUDED WITH BILL OF MATERIAL FOR PIER #2 SEE SHEET #20 OF 47.

DIAPHRAGM DETAILS
FAI ROUTE 80 SEC(50-2) BR
LA SALLE COUNTY
STRUCTURE NO. 050-0220
STA. 672+19.43

(EASTBOUND STRUCTURE)

FOR INFORMATION ONLY

MODEL: Default
FILE NAME: \\QuiggProjects\2018\18L018 Various Structure IDOT D3 Farnsworth PTB 161-21\Work Order 14 - I-80 Roadway and other\CADD\CADD Sheets\Existing Bridge Plans\D366H21-sht-Existing Bridge Plans 0228-0229 057.dgn

QUIGG ENGINEERING INC	USER NAME = mwilson	DESIGNED -	REVISED -
		DRAWN -	REVISED -
	PLOT SCALE = 2.0000 ' / in.	CHECKED -	REVISED -
	PLOT DATE = 10/2/2019	DATE - 10/4/2019	REVISED -

STATE OF ILLINOIS
DEPARTMENT OF TRANSPORTATION

EXISTING STRUCTURAL PLANS
STRUCTURE NO. 050-0220/0221

SCALE: | SHEET 13 OF 42 SHEETS | STA. | TO STA.

F.A.I RTE.	SECTION	COUNTY	TOTAL SHEETS	SHEET NO.
80	50-2(HB-2)BDR(HB-1)BR(BR)BR-1	LASALLE	328	262
		CONTRACT NO. 66H21		
	ILLINOIS	FED. AID PROJECT		

F.A.I. ROUTE NO.	SEC.	COUNTY	TOTAL SHEETS	SHEET NO.
80	*	LASALLE	196	138
ILLINOIS PROJECT				

BR. SHEET 12 OF 47
* (50-2)HBR-1, HB-2, BR

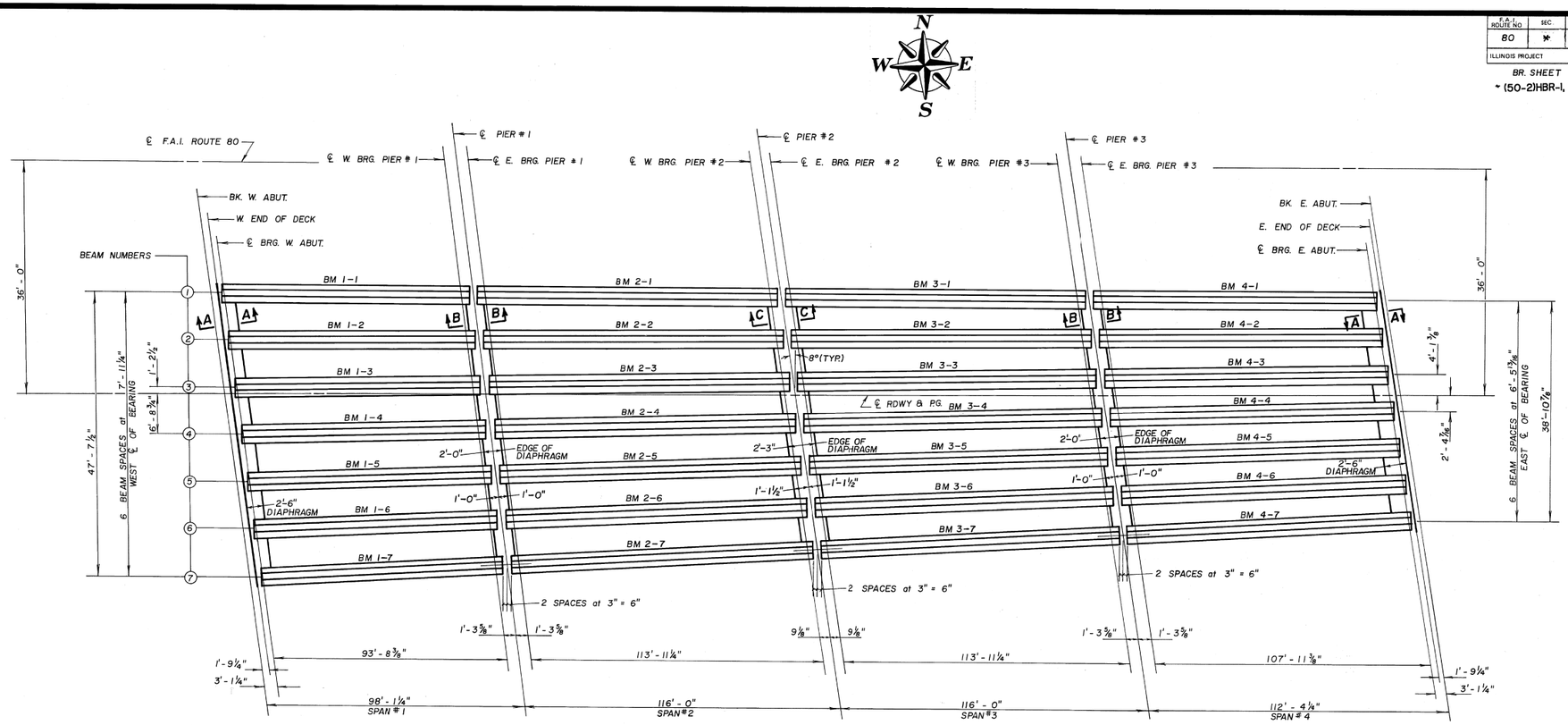

FRAMING PLAN

NOTE: BM 1-5 DENOTES SPAN #1 - BEAM #5.

SEE SHEETS 13,14,& 15 OF 47 FOR BEAM LENGTHS.

FOR SECTIONS A-A, B-B, AND C-C SEE SHEET 11 OF 47.

FRAMING PLAN
FAI ROUTE 80 SEC(50-2) BR
LA SALLE COUNTY
STRUCTURE NO. 050-0220
STA. 672+19.43

(EASTBOUND STRUCTURE)

FOR INFORMATION ONLY

MODEL: Default
FILE NAME: \\QuigdProjects\2018\18L018 Various Structure IDOT D3 Farnsworth PTB 161-21\Work Order 14 - I-80 Roadway and other\CADD\CADD Sheets\Existing Bridge Plans\D3661F21-sht-Existing Bridge Plans 0228-0229-058.dgn

QUIGG ENGINEERING INC

USER NAME = mwilson	DESIGNED -	REVISED -	
	DRAWN -	REVISED -	
PLOT SCALE = 2.0000 ' / in.	CHECKED -	REVISED -	
PLOT DATE = 10/2/2019	DATE - 10/4/2019	REVISED -	

STATE OF ILLINOIS
DEPARTMENT OF TRANSPORTATION

EXISTING STRUCTURAL PLANS
STRUCTURE NO. 050-0220/0221

SCALE: | SHEET 14 OF 42 SHEETS | STA. | TO STA.

F.A.I RTE.	SECTION	COUNTY	TOTAL SHEETS	SHEET NO.
80	50-2(HB-2)BDR(HB-1)BR(BR)BR-1	LASALLE	328	263
		CONTRACT NO. 66H21		
		ILLINOIS	FED. AID PROJECT	

ROUTE NO.	SECTION	COUNTY	TOTAL SHEETS	SHEET NO.
F.A.I. 80	*	LASALLE	196	139
FED. ROAD DIST. NO. 7	ILLINOIS	FED. AID PROJECT-		

BR. SHEET NO. 13

SHEETS 47

* (50-2)HBR-1, HB-2, BR

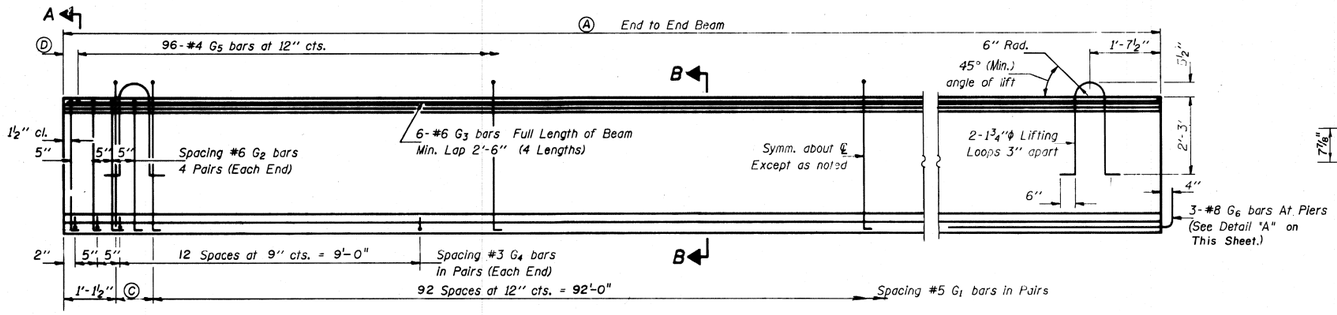

ELEVATION OF BEAM
(Showing Reinforcement & Dimensions)

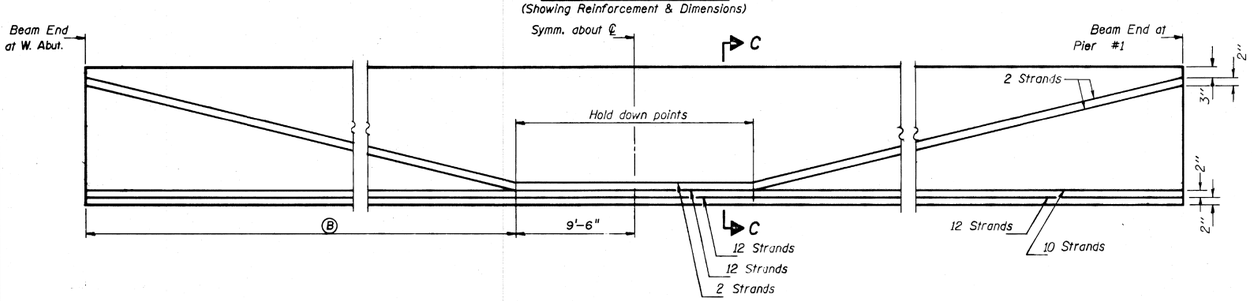

ELEVATION OF BEAM
(Showing Prestressing Steel)

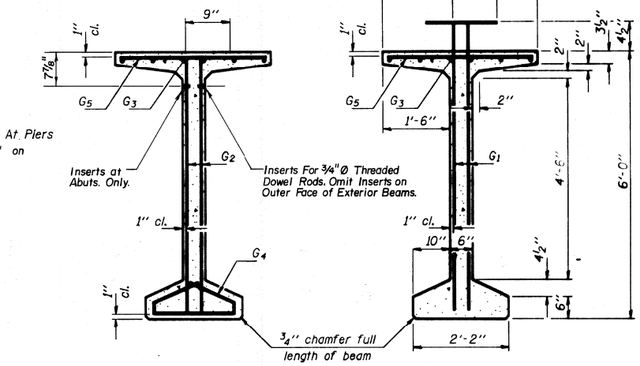

SECTION A-A

SECTION B-B

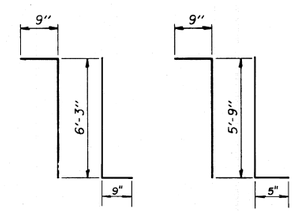

BAR G_1

BAR G_2

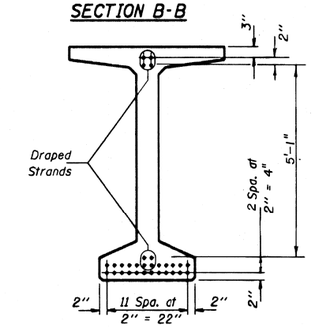

SECTION C-C

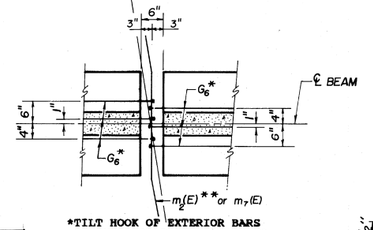

*TILT HOOK OF EXTERIOR BARS OF EXTERIOR BEAMS INWARD TO FIT WITHIN LIMITS OF CAST IN PLACE DIAPHRAGM.

**TIE $m_2(E)$ AND $m_7(E)$ BARS TO G_6 BARS WITH #9 WIRE TO PREVENT ANY MOVEMENT BETWEEN BARS.

DETAIL "A"

SEE SECTION B-B ON SHEET 11 OF 47 FOR ELEVATION VIEW OF DETAIL "A".

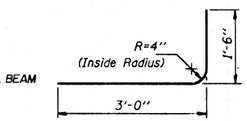

BAR G_6

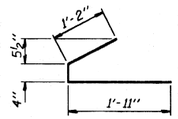

BAR G_4

NOTES

All inserts, threaded dowel rods for inserts, reinforcing and Prestressing Steel, and other items which are cast into the Precast Concrete Bulb T-Beams shall be included in the contract unit price per lineal foot of "Furnishing and Erecting Precast Prestressed Concrete Bulb T-Beams, 72."

Inserts for ¾"ϕ threaded dowel rods are to be double strut, coil type for interior T-Beams and single coil, flared loop type for exterior T-Beams.

Prestressing steel shall be non-galvanized high strength, low relaxation 7-wire strand, Grade 270.

The nominal diameter shall be ½" and the nominal cross-sectional area shall be 0.153 sq. in.

Non-prestressing steel shall conform to AASHTO designation M-31, M-42 or M-53 Grade 60.

Steel for lifting loops shall be non-deformed bars fy = 40,000 psi.

Required release strength, f'ci, shall be 5000 psi.

* See Framing Plan For Beam Locations

BEAM NO.*	Ⓐ	Ⓑ	Ⓒ	Ⓓ
1-1	95'-8"	38'-4"	8 1/2"	4"
1-2	95'-7 3/4"	38'-3 7/8"	8 3/8"	3 7/8"
1-3	95'-7 1/4"	38'-3 5/8"	8 1/8"	3 5/8"
1-4	95'-6 3/4"	38'-3 3/8"	7 7/8"	3 3/8"
1-5	95'-6"	38'-3"	7 1/2"	3"
1-6	95'-5 3/4"	38'-2 7/8"	7 3/8"	2 7/8"
1-7	95'-5 1/4"	38'-2 5/8"	7 1/8"	2 5/8"

NOTE: Beam No. 1-5 Denotes Span 1 Beam 5

*** BAR LIST

Bar	No.	Size	Length	Shape
G_1	190	#5	7'-9"	⌐L
G_2	16	#6	6'-11"	⌐L
G_3	24	#6	25'-10"	—
G_4	60	#3	3'-5"	⊂
G_5	96	#4	3'-3"	—
G_6	3	#8	4'-6"	⌒

*** For one beam only.

BILL OF MATERIAL

Item	Unit	Total
Furnishing and Erecting Precast Prestressed Concrete Bulb T-Beams, 72"	FOOT	669

BEAM DETAILS - SPAN #1
F.A.I. RT. 80 SEC. (50-2)BR
LASALLE COUNTY
STRUCTURE NO. 050-0220
STA. 672 + 19.43

(EASTBOUND STRUCTURE)

FOR INFORMATION ONLY

MODEL: Default
FILE NAME: \\QuiggProjects\2018\18L018 Various Structure IDOT D3 Farnsworth PTB 161-21\Work Order 14 - I-80 Roadway and other\CADD\CADD Sheets\Existing Bridge Plans\0366121-sht-Existing Bridge Plans 0228-0229-059.dgn

QUIGG ENGINEERING INC

USER NAME = mwilson	DESIGNED -	REVISED -	
	DRAWN -	REVISED -	
PLOT SCALE = 2.0000 ' / in.	CHECKED -	REVISED -	
PLOT DATE = 10/2/2019	DATE - 10/4/2019	REVISED -	

STATE OF ILLINOIS
DEPARTMENT OF TRANSPORTATION

EXISTING STRUCTURAL PLANS
STRUCTURE NO. 050-0220/0221

SCALE: | SHEET 15 OF 42 SHEETS | STA. | TO STA.

F.A.I RTE.	SECTION	COUNTY	TOTAL SHEETS	SHEET NO.
80	50-2(HB-2)BDR(HB-1)BR(BR)BR-1	LASALLE	328	264
		CONTRACT NO. 66H21		
	ILLINOIS	FED. AID PROJECT		

ROUTE NO.	SECTION	COUNTY	TOTAL SHEETS	SHEET NO.
F.A.I. 80	*	LASALLE	196	140

BR. SHEET NO. 14

SHEETS 47

* (50-2)HBR-1, HB-2, BR

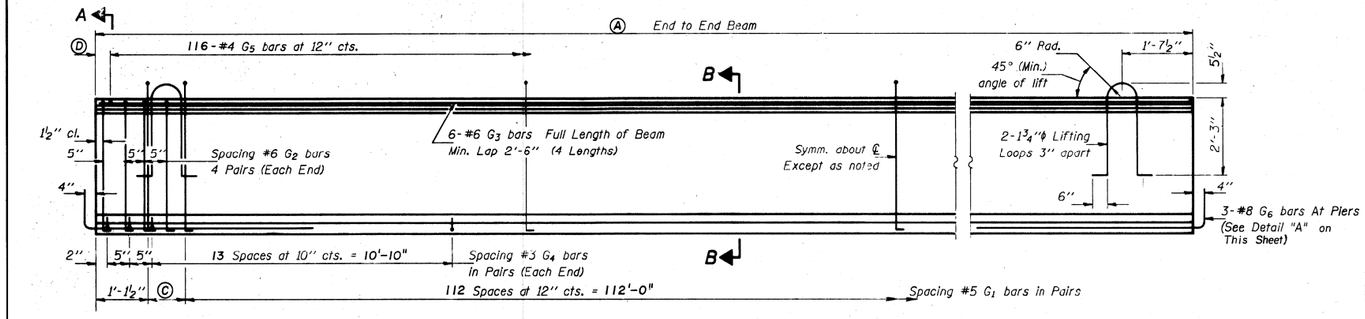

ELEVATION OF BEAM
(Showing Reinforcement & Dimensions)

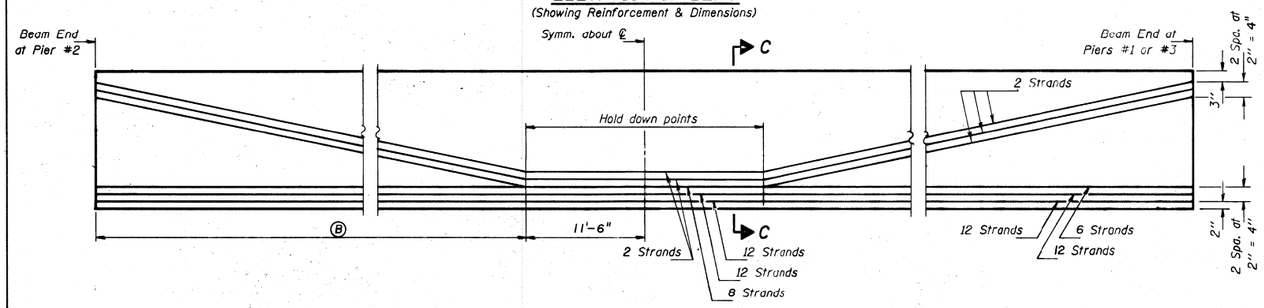

ELEVATION OF BEAM
(Showing Prestressing Steel)

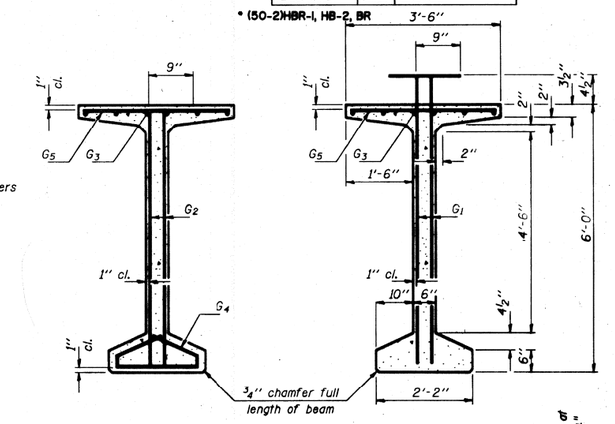

SECTION A-A

SECTION B-B

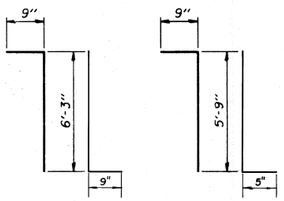

BAR G1

BAR G2

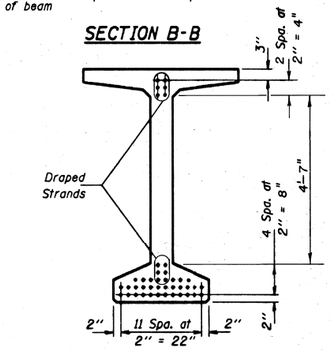

SECTION C-C

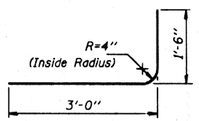

BAR G6

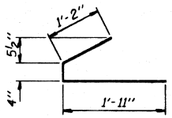

BAR G4

*** BAR LIST

Bar	No.	Size	Length	Shape
G_1	230	#5	7'-9"	
G_2	16	#6	6'-11"	
G_3	24	#6	30'-9"	
G_4	64	#3	3'-5"	
G_5	116	#4	3'-3"	
G_6	6	#8	4'-6"	

*** For one beam only.

BILL OF MATERIAL

Item	Unit	Total
Furnishing and Erecting Precast Prestressed Concrete Bulb T-Beams, 72"	FOOT	1615

NOTES

All inserts, threaded dowel rods for inserts, reinforcing and Prestressing Steel, and other items which are cast into the Precast Concrete Bulb T-Beams shall be included in the contract unit price per lineal foot of "Furnishing and Erecting Precast Prestressed Concrete Bulb T-Beams, 72."

Inserts for ¾"φ threaded dowel rods are to be double strut, coil type for interior T-Beams and single coil, flared loop type for exterior T-Beams.

Prestressing steel shall be non-galvanized high strength, low relaxation 7-wire strand, Grade 270.

The nominal diameter shall be ½" and the nominal cross-sectional area shall be 0.153 sq. in.

Non-prestressing steel shall conform to AASHTO designation M-31, M-42 or M-53 Grade 60.

Steel for lifting loops shall be non-deformed bars fy = 40,000 psi.

Required release strength, f'ci, shall be 5000 psi.

* See Framing Plan For Beam Locations

BEAM NO.*	Ⓐ	Ⓑ	Ⓒ	Ⓓ
2-1	115'-6"	46'-3"	7 1/2"	3"
2-2	115'-5 1/2"	46'-2 3/4"	7 1/4"	2 3/4"
2-3	115'-4 3/4"	46'-2 3/8"	6 7/8"	2 3/8"
2-4	115'-4 1/4"	46'-2 1/8"	6 5/8"	2 1/8"
2-5	115'-3 1/2"	46'-1 3/4"	6 1/4"	1 3/4"
2-6	115'-3"	46'-1 1/2"	6"	1 1/2"
2-7	115'-2 1/2"	46'-1 1/4"	5 3/4"	1 1/4"
3-1	115'-6"	46'-3"	7 1/2"	3"
3-2	115'-5 1/2"	46'-2 3/4"	7 1/4"	2 3/4"
3-3	115'-4 3/4"	46'-2 3/8"	6 7/8"	2 3/8"
3-4	115'-4 1/4"	46'-2 1/8"	6 5/8"	2 1/8"
3-5	115'-3 1/2"	46'-1 3/4"	6 1/4"	1 3/4"
3-6	115'-3"	46'-1 1/2"	6"	1 1/2"
3-7	115'-2 1/2"	46'-1 1/4"	5 3/4"	1 1/4"

NOTE: Beam No. 2-5 Denotes Span 2 Beam 5

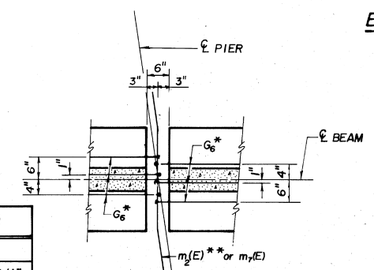

*TILT HOOK OF EXTERIOR BARS OF EXTERIOR BEAMS INWARD TO FIT WITHIN LIMITS OF CAST IN PLACE DIAPHRAGM.

**TIE m2(E) AND m7(E) BARS TO G6 BARS WITH #9 WIRE TO PREVENT ANY MOVEMENT BETWEEN BARS.

DETAIL "A"

SEE SECTIONS B-B AND C-C ON SHEET 11 OF 47 FOR ELEVATION VIEWS OF DETAIL "A".

BEAM DETAILS - SPANS #2 & #3
F.A.I. RT. 80 SEC. (50-2)BR
LASALLE COUNTY
STRUCTURE NO. 050-0220
STA. 672+19.43

(EASTBOUND STRUCTURE)

FOR INFORMATION ONLY

MODEL: Default
FILE NAME: \\QuiggProjects\2018\18L018 Various Structure IDOT D3 Farnsworth PTB 161-21\Work Order 14 - I-80 Roadway and other\CADD\CADD Sheets\Existing Bridge Plans\0366121-sht-Existing Bridge Plans 0228-0229 060.dgn

QUIGG ENGINEERING INC

USER NAME = mwilson	DESIGNED -	REVISED -
	DRAWN -	REVISED -
PLOT SCALE = 2.0000 ' / in.	CHECKED -	REVISED -
PLOT DATE = 10/2/2019	DATE - 10/4/2019	REVISED -

STATE OF ILLINOIS
DEPARTMENT OF TRANSPORTATION

EXISTING STRUCTURAL PLANS
STRUCTURE NO. 050-0220/0221

SCALE: | SHEET 16 OF 42 SHEETS | STA. | TO STA.

F.A.I RTE.	SECTION	COUNTY	TOTAL SHEETS	SHEET NO.
80	50-2(HB-2)BDR(HB-1)BR(BR)BR-1	LASALLE	328	265

CONTRACT NO. 66H21

ILLINOIS | FED. AID PROJECT

ROUTE NO.	SECTION	COUNTY	TOTAL SHEETS	SHEET NO.
F.A.I. 80	*	LASALLE	196	141
FED. ROAD DIST. NO. 7		ILLINOIS	FED. AID PROJECT-	

BR. SHEET NO. 15

SHEETS 47

* (50-2)HBR-1, HB-2, BR

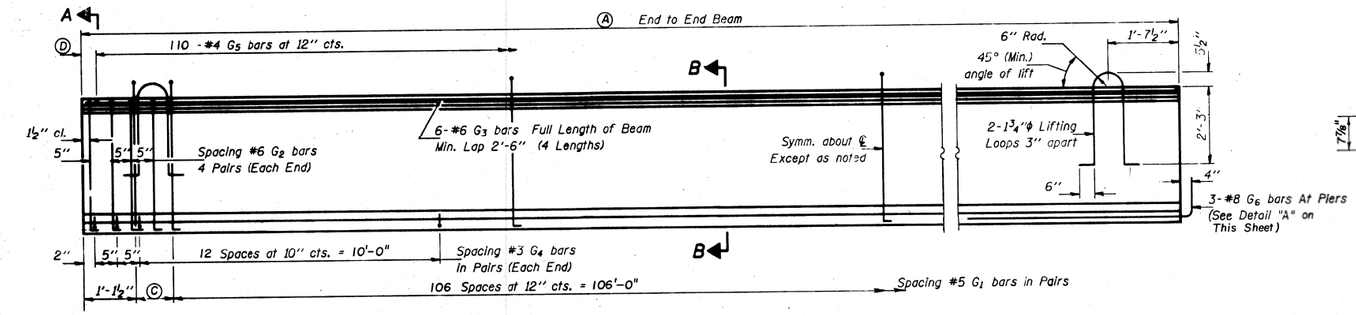

ELEVATION OF BEAM
(Showing Reinforcement & Dimensions)

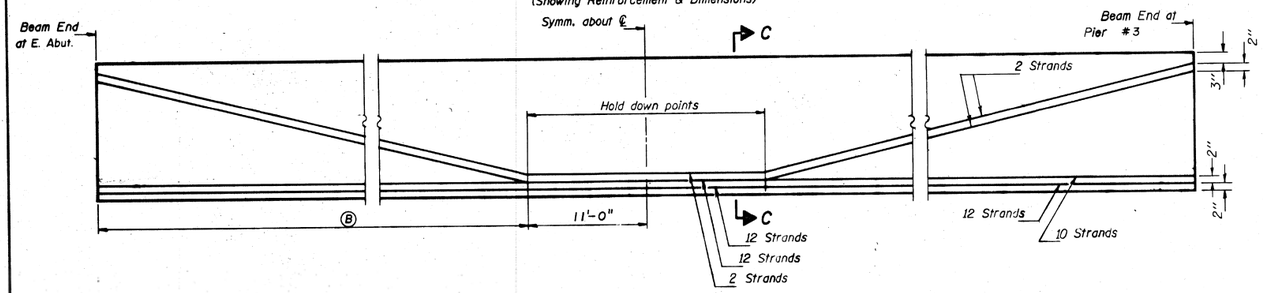

ELEVATION OF BEAM
(Showing Prestressing Steel)

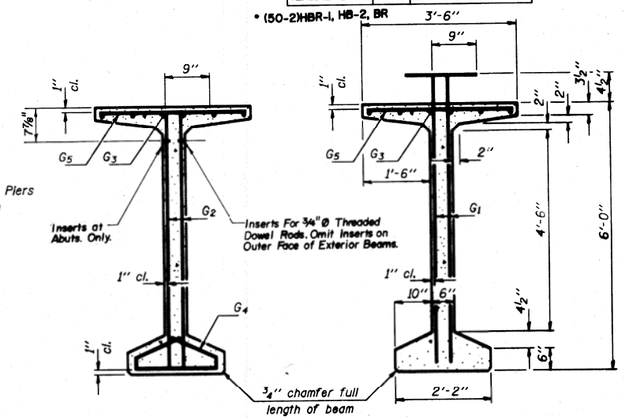

SECTION A-A

SECTION B-B

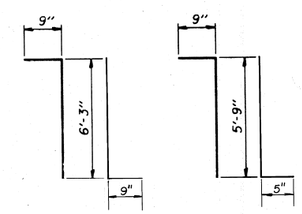

BAR G_1

BAR G_2

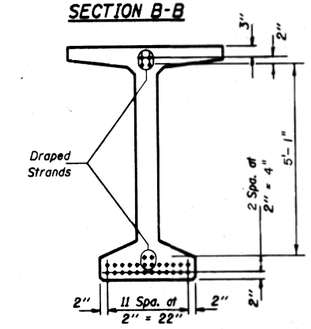

SECTION C-C

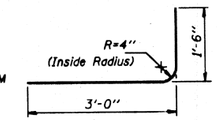

BAR G_6

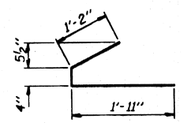

BAR G_4

NOTES

All inserts, threaded dowel rods for inserts, reinforcing and Prestressing Steel, and other items which are cast into the Precast Concrete Bulb T-Beams shall be included in the contract unit price per lineal foot of "Furnishing and Erecting Precast Prestressed Concrete Bulb T-Beams, 72."

Inserts for ¾"ϕ threaded dowel rods are to be double strut, coil type for interior T-Beams and single coil, flared loop type for exterior T-Beams.

Prestressing steel shall be non-galvanized high strength, low relaxation 7-wire strand, Grade 270.

The nominal diameter shall be ½" and the nominal cross-sectional area shall be 0.153 sq. in.

Non-prestressing steel shall conform to AASHTO designation M-31, M-42 or M-53 Grade 60.

Steel for lifting loops shall be non-deformed bars fy = 40,000 psi.

Required release strength, f'ci, shall be 5000 psi.

* See Framing Plan For Beam Locations

BEAM NO.*	(A)	(B)	(C)	(D)
4-1	109'-11 1/4"	43'-11 5/8"	10 1/8"	5 5/8"
4-2	109'-10 1/2"	43'-11 1/4"	9 3/4"	5 1/4"
4-3	109'-10"	43'-11"	9 1/2"	5"
4-4	109'-9 1/2"	43'-10 3/4"	9 1/4"	4 3/4"
4-5	109'-8 3/4"	43'-10 3/8"	8 7/8"	4 3/8"
4-6	109'-8 1/4"	43'-10 1/8"	8 5/8"	4 1/8"
4-7	109'-7 3/4"	43'-9 7/8"	8 3/8"	3 7/8"

NOTE: Beam No. 4-5 Denotes Span 4 Beam 5.

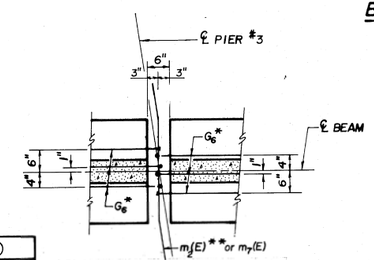

*TILT HOOK OF EXTERIOR BARS OF EXTERIOR BEAMS REQRD TO FIT WITHIN LIMITS OF CAST IN PLACE DIAPHRAGM.

**TIE $m_1(E)$ AND $m_7(E)$ BARS TO G_6 BARS WITH #9 WIRE TO PREVENT ANY MOVEMENT BETWEEN BARS.

DETAIL "A"

SEE SECTION B-B ON SHEET 11 OF 47 FOR ELEVATION VIEW OF DETAIL "A"

*** BAR LIST

Bar	No.	Size	Length	Shape
G_1	218	#5	7'-9"	7L
G_2	16	#6	6'-11"	7L
G_3	24	#6	29'-4"	—
G_4	60	#3	3'-5"	⌐
G_5	110	#4	3'-3"	—
G_6	3	#8	4'-6"	⌐

*** For one beam only.

BILL OF MATERIAL

Item	Unit	Total
Furnishing and Erecting Precast Prestressed Concrete Bulb T-Beams, 72"	FOOT	769

BEAM DETAILS - SPAN #4
F.A.I. RT. 80 SEC. (50-2)BR
LASALLE COUNTY
STRUCTURE NO. 050-0220
STA. 672+19.43

(EASTBOUND STRUCTURE)

FOR INFORMATION ONLY

MODEL: Default
FILE NAME: \\QuigigProjects\2018\18L018 Various Structure IDOT D3 Farnsworth PTB 161-2 \Work Order 14 - I-80 Roadway and other\CADD\CADD Sheets\Existing Bridge Plans 0228-0229 061.dgn

QUIGG ENGINEERING INC

USER NAME = mwilson	DESIGNED -	REVISED -
	DRAWN -	REVISED -
PLOT SCALE = 2.0000 ' / in.	CHECKED -	REVISED -
PLOT DATE = 10/2/2019	DATE - 10/4/2019	REVISED -

STATE OF ILLINOIS
DEPARTMENT OF TRANSPORTATION

EXISTING STRUCTURAL PLANS
STRUCTURE NO. 050-0220/0221

SCALE: SHEET 17 OF 42 SHEETS STA. TO STA.

F.A.I RTE.	SECTION	COUNTY	TOTAL SHEETS	SHEET NO.
80	50-2(HB-2)BDR(HB-1)BR(BR)BR-1	LASALLE	328	266
		CONTRACT NO. 66H21		
		ILLINOIS	FED. AID PROJECT	

STATE OF ILLINOIS
DEPARTMENT OF TRANSPORTATION

ROUTE NO.	SECTION	COUNTY	TOTAL SHEETS	SHEET NO.
F.A.I. 80	*	LASALLE	196	142
FED. ROAD DIST. NO. 7	ILLINOIS	FED. AID PROJECT-		

BR. SHEET NO. 16
SHEETS 47

* (50-2)HBR-1, HB-2, BR

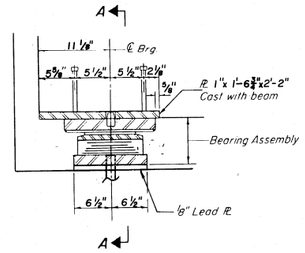

SECTION @ W. ABUT.
(LOOKING NORTH)

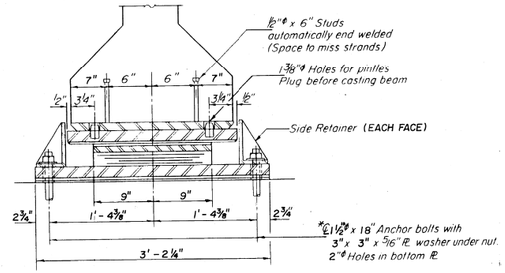

SECTION A-A

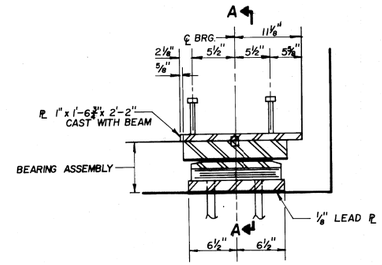

SECTION AT E. ABUT.
(LOOKING NORTH)

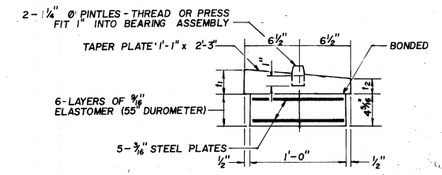

BEARING ASSEMBLY
NOTE: SHIM PLATES SHALL NOT BE PLACED UNDER BEARING ASSEMBLY
(LOOKING NORTH)

TYPE II TFE ELASTOMERIC EXP. BRG. AT ABUTMENTS

* NOTE: AFTER BEAMS HAVE BEEN ERECTED HOLES AT EXPANSION BEARINGS SHALL BE DRILLED AND ANCHOR BOLTS GROUTED IN PLACE. SEE SHEET 40 OF 47 FOR ANCHOR BOLT INSTALLATION.

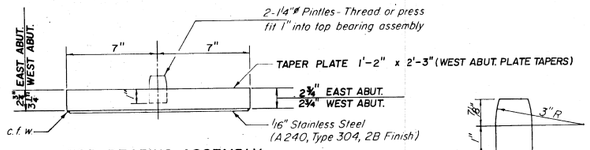

TOP BEARING ASSEMBLY

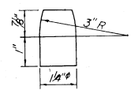

PINTLE

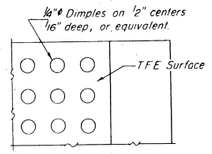

PLAN-TFE SURFACE

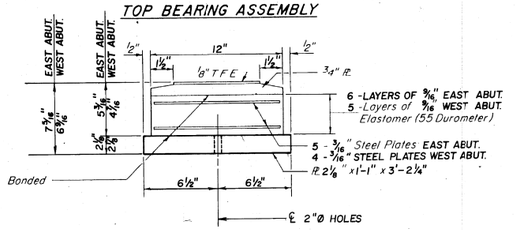

BOTTOM BEARING ASSEMBLY

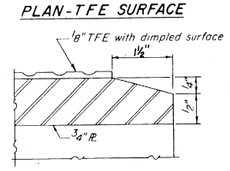

SECTION THRU TFE

Note: The 1/8" TFE sheet shall be bonded directly to the top steel plate with a two-component, medium viscosity epoxy resin, conforming to the requirements of the Federal Specification MMM-A-134, Type I. The bond agent shall be applied on the full area of the contact surfaces.

Bonding of 1/8" TFE sheet during vulcanizing process will be permitted provided the process and method of adjusting assembly height is approved by the Engineer.

ELASTOMERIC BEARING, TYPE I
TAPERED PLATE THICKNESS

LOCATION			t_1	t_2
WEST BEARING	PIER	1	4 3/16"	3 15/16"
EAST BEARING	PIER	1	3 5/16"	3"
WEST BEARING	PIER	3	3 7/8"	3 5/8"
EAST BEARING	PIER	3	3 1/8"	3"

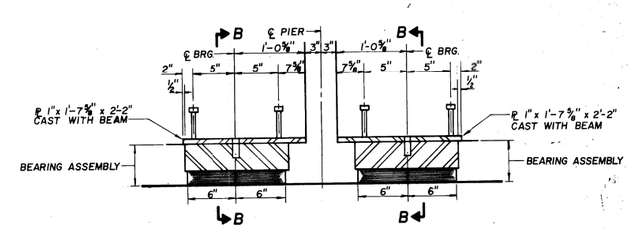

SECTION AT PIER
(LOOKING NORTH)

TYPE I ELASTOMERIC EXP. BRG. AT PIERS #1 & #3

* NOTE: AFTER BEAMS HAVE BEEN ERECTED HOLES AT EXPANSION BEARINGS SHALL BE DRILLED AND ANCHOR BOLTS GROUTED IN PLACE. SEE SHEET 40 OF 47 FOR ANCHOR BOLT INSTALLATION.

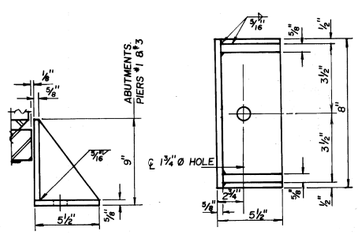

SIDE RETAINER
EQUIVALENT ROLLED ANGLE WITH STIFFENERS WILL BE ALLOWED IN LIEU OF WELDED PLATES.

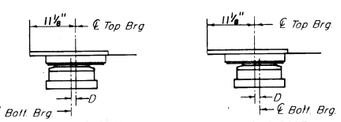

BELOW 50°F
(Move bolt brg. away from fixed brg.)

ABOVE 50°F.
(Move bolt brg. toward fixed brg.)

SETTING ANCHOR BOLTS AT EXP. BRG.
D = 1/8" per each 100' of expansion for every 15° temp. change from the normal temp. of 50°F.

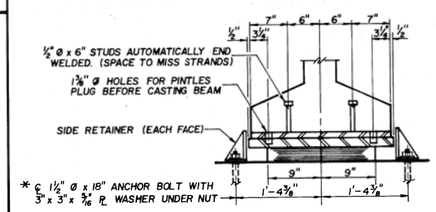

SECTION B-B

BILL OF MATERIAL

	Item	Unit	Total
	Elastomeric Bearing Assembly, Type I	Each	28
	Elastomeric Bearing Assembly, Type II	Each	14
**	Furnishing and Erecting Structural Steel	Lbs	5703

** INCLUDES SIDE RETAINERS AND ANCHOR BOLTS ONLY.

BEARING DETAILS
FAI ROUTE 80 SEC(50-2) BR
LA SALLE COUNTY
STRUCTURE NO. 050-0220
STA. 672+19.43

(EASTBOUND STRUCTURE)

FOR INFORMATION ONLY

MODEL: Default
FILE NAME: \\QuiggProjects\2018\18L018 Various Structure IDOT D3 Farnsworth PTB 161-2\Work Order 14 - I-80 Roadway and other\CADD\CADD Sheets\Existing Bridge Plans\D366H21-int-Existing Bridge Plans 0228-0229 062.dgn

QEI
QUIGG ENGINEERING INC

USER NAME = mwilson	DESIGNED -	REVISED -	
	DRAWN -	REVISED -	
PLOT SCALE = 2.0000 ' / in.	CHECKED -	REVISED -	
PLOT DATE = 10/2/2019	DATE - 10/4/2019	REVISED -	

STATE OF ILLINOIS
DEPARTMENT OF TRANSPORTATION

EXISTING STRUCTURAL PLANS
STRUCTURE NO. 050-0220/0221

SCALE: | SHEET 18 OF 42 SHEETS | STA. | TO STA.

F.A.I RTE.	SECTION	COUNTY	TOTAL SHEETS	SHEET NO.
80	50-2(HB-2)BDR(HB-1)BR(BR)BR-1	LASALLE	328	267
		CONTRACT NO. 66H21		
		ILLINOIS	FED. AID PROJECT	

FAI ROUTE NO.	SEC	COUNTY	TOTAL SHEETS	SHEET NO
80	*	LASALLE	196	143

ILLINOIS PROJECT

* (50-2)HBR-I, HB-2, BR BR. SHEET 17 OF 47

END POST SHALL BE POURED AFTER BRIDGE PARAPET IS IN PLACE. FORM TOP SURFACE TO MATCH PARAPET GRADE. QUANTITY INCLUDED WITH CONCRETE SUPERSTRUCTURE.

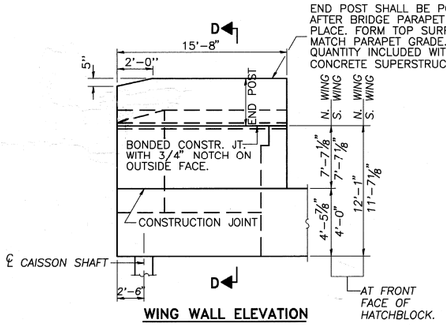

WING WALL ELEVATION

FOUNDATION DATA

TYPE: CAISSON SHAFTS 36"ø
CAPACITY: 112 TONS
MIN. LENGTH: 25 FEET
NO. REQUIRED: 8

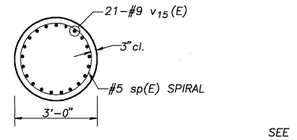

SECTION F-F

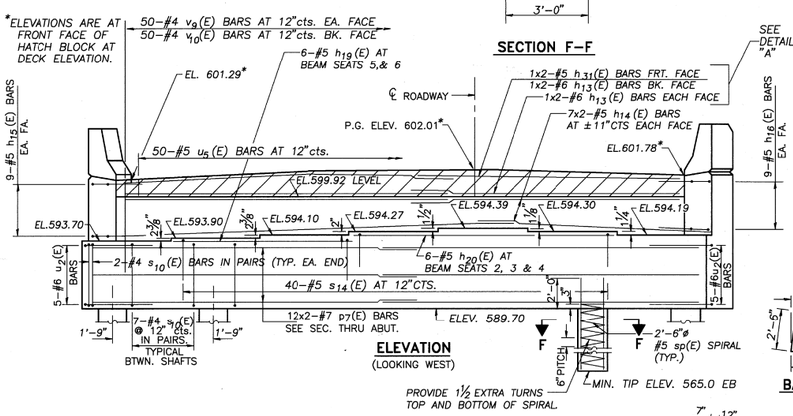

ELEVATION
(LOOKING WEST)

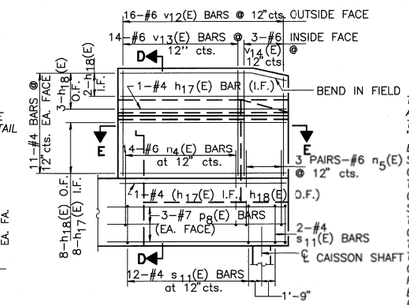

WING WALL ELEVATION
REINFORCEMENT

GENERAL NOTES

THE FOUNDATIONS DRILLED "CAISSON SHAFTS" ARE ASSUMED TO EXTEND TO ELEVATION 565.0. BELOW THIS ELEVATION THE SPECIAL PROVISIONS FOR "CAISSON SHAFTS" APPLY: ABOVE THIS ELEVATION "STANDARD SPECIFICATIONS FOR STRUCTURAL CONCRETE" APPLY. PERMANENT STEEL CASING IF USED WILL NOT BE PERMITTED ABOVE THE EXISTING GROUND SURFACE ELEVATIONS. COST OF "STEEL CASING" IS INCIDENTAL TO "CAISSON SHAFTS 36".

TIP ELEVATIONS MAY VARY DEPENDING ON FIELD CONDITIONS. QUANTITIES AND DETAILING ARE FOR THE ESTIMATED TIP ELEVATION. IF THE FINAL TIP ELEVATIONS ARE CHANGED DUE TO FIELD CONDITIONS, THE CAISSON SHAFT AND REINFORCEMENT SHALL BE ADJUSTED AS REQUIRED BY THE ENGINEER. THESE ADDITIONAL QUANTITIES REQUIRED BY THE ENGINEER AND FURNISHED BY THE CONTRACTOR WILL BE PAID FOR AT THE UNIT PRICE BID FOR THE WORK.

THE EXISTING WEST ABUTMENT FOOTING IS AT ELEVATION +/- 574.0. SHALE WAS EXCAVATED FOR CONSTRUCTION OF THAT ABUTMENT AND IT IS NOT KNOWN HOW FAR WEST THE EXCAVATION EXTENDS OR AT WHAT SLOPE THE WEST WALL OF THE EXCAVATION WAS MADE TO. FOR THIS REASON DRILLED SHAFTS AT THE NEW ABUTMENT LOCATION MAY PARALLEL THE WEST WALL OF THE EXCAVATION. THE HORIZONTAL DISTANCE BETWEEN THE DRILLED SHAFTS AND THE WEST WALL OF THE EXCAVATION IS NOT KNOWN. THE OLD EXCAVATION PROBABLY WAS FILLED WITH SAND-SEE LOG OF BORING NO. 9 (DRILLED 8-13-92).

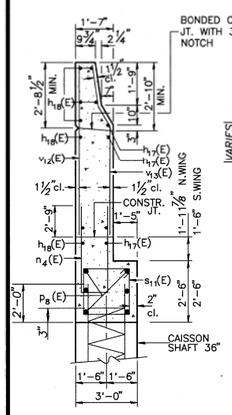

SEC. D-D

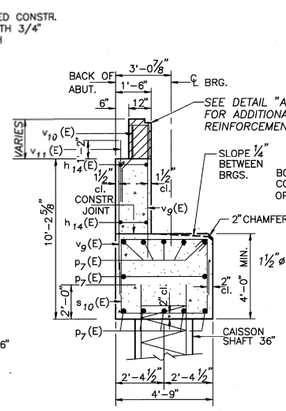

SEC. THRU ABUT.
(AT RIGHT ANGLES)

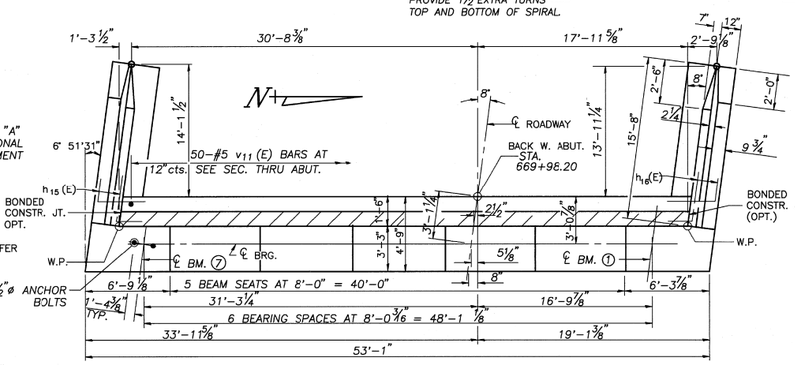

TOP VIEW

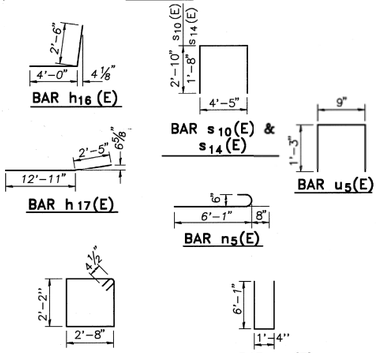

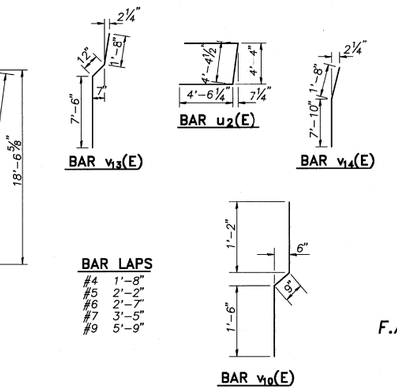

BILL OF MATERIAL

BAR	NO.	SIZE	LENGTH	SHAPE
h13(E)	6	#6	26'-3"	
h14(E)	28	#5	26'-0"	
h15(E)	18	#5	6'-6"	
h16(E)	18	#5	6'-6"	
h17(E)	20	#4	15'-4"	
h18(E)	28	#4	15'-4"	
h19(E)	6	#5	16'-0"	
h20(E)	6	#5	24'-0"	
h31(E)	2	#5	26'-3"	
n4(E)	28	#6	13'-6"	
n5(E)	12	#6	6'-9"	
p7(E)	24	#7	28'-2"	
p8(E)	12	#7	18'-4"	
s10(E)	78	#4	10'-1"	
s11(E)	28	#4	10'-5"	
s14(E)	40	#5	7'-9"	
* sp(E)	8	#5	25'-0"	
u2(E)	10	#6	13'-5"	
u5(E)	50	#5	3'-3"	
v9(E)	100	#4	9'-3"	
v10(E)	50	#4	3'-5"	
v11(E)	50	#5	2'-8"	
v12(E)	32	#6	10'-2"	
v13(E)	28	#6	10'-2"	
v14(E)	6	#6	9'-6"	
v15(E)	168	#9	32'-9"	
CONCRETE STRUCTURES		CU. YD.	84.7	
STRUCTURE EXCAVATION		CU. YD.	61	
REINFORCEMENT BARS (EPOXY COATED)		** LBS.	30450	
CAISSON SHAFTS 36"		CU. FT.	1413	
ROCK EXCAVATION FOR STRUCTURES		CU. YD.	95	

* LENGTH IS HEIGHT OF SPIRALS
** WEIGHT INCLUDES SPACERS FOR SPIRALS

NOTES

ALL EDGES SHALL HAVE STANDARD 3/4" CHAMFER EXCEPT AS SHOWN.

SPACE REINFORCEMENT IN CAP TO MISS ANCHOR BOLTS.

POUR STEPS MONOLITHICALLY WITH CAP.

HATCHED AREA TO BE POURED AFTER SUPERSTRUCTURE FORMS HAVE BEEN REMOVED. QUANTITY OF CONCRETE INCLUDED WITH "CONCRETE SUPERSTRUCTURE" ON SHEET # 9 OF 47.

REINFORCEMENT BARS DESIGNATED (E) SHALL BE EPOXY COATED.

BARS INDICATED THUS 13x2-#5 ETC. INDICATES 13 LINES OF BARS WITH 2 LENGTHS PER LINE.

FOR ANCHOR BOLT INSTALLATION DETAILS SEE SHEET # 40 OF 47.

MINIMUM SPIRAL LAP = 1-1/2 TURNS.

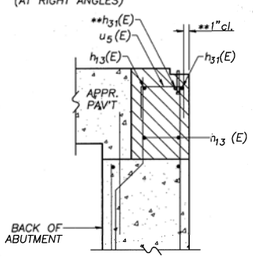

DETAIL "A"

**PLACE h31(E) BAR IN BACK OF ANCHOR BOLT AS SHOWN IF REQUIRED TO MAINTAIN 1"cl. ANCHOR BOLTS SHOULD BE TIED TO h31(E) BARS.

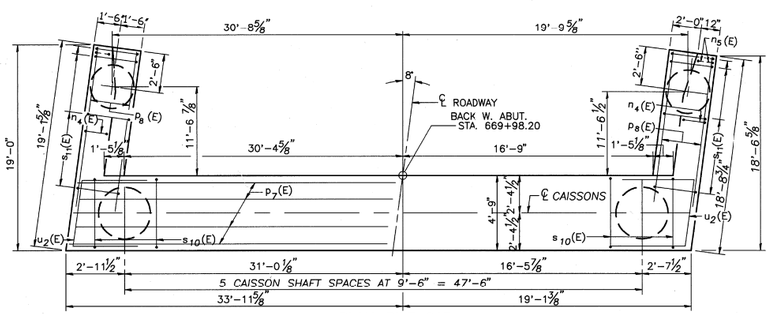

PLAN-PILE CAP

WEST ABUTMENT
F.A.I. ROUTE 80 SEC.(50-2)BR
LASALLE COUNTY
STRUCTURE NO. 050-0220
STA. 672 + 19.43
(EASTBOUND STRUCTURE)

FOR INFORMATION ONLY

MODEL: Default
FILE NAME: \\QuiggProjects\2018\18L018 Various Structure IDOT D3 Farnsworth PTB 161-2 \Work Order 14 - I-80 Roadway and other\CADD\CADD Sheets\Existing Bridge Plans\D3661021-bt-Existing Bridge Plans 0228-0229 063.dgn

QUIGG ENGINEERING INC

USER NAME = mwilson	DESIGNED -	REVISED -
	DRAWN -	REVISED -
PLOT SCALE = 2.0000 ' / in.	CHECKED -	REVISED -
PLOT DATE = 10/2/2019	DATE - 10/4/2019	REVISED -

STATE OF ILLINOIS
DEPARTMENT OF TRANSPORTATION

EXISTING STRUCTURAL PLANS
STRUCTURE NO. 050-0220/0221

SCALE: SHEET 19 OF 42 SHEETS STA. TO STA.

F.A.I RTE.	SECTION	COUNTY	TOTAL SHEETS	SHEET NO.
80	50-2(HB-2)BDR(HB-1)BR(BR)BR-1	LASALLE	328	268

CONTRACT NO. 66H21

ILLINOIS FED. AID PROJECT

FAI ROUTE NO.	SEC	COUNTY	TOTAL SHEETS	SHEET NO
80	*	LASALLE	196	144

ILLINOIS PROJECT # (50-2)HBR-I, HB-2, BR

BR. SHEET 18 OF 47

* DO NOT TAPER END OF SOUTH WING WALL.

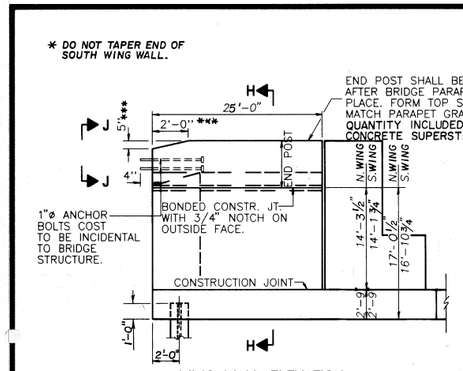

WING WALL ELEVATION

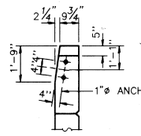

VIEW J-J

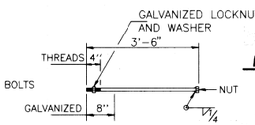

1"ø ANCHOR BOLT

WELDED WIRE FABRIC 6x6-W4.0 x W4.0 WEIGHING 58# 1100 SQ. FT. THE COST OF EXCAVATION, CLASS SI CONCRETE ENCASEMENT AND REINFORCEMENT IS INCIDENTAL TO THE COST OF FURNISHING PILES. FORMS FOR ENCASEMENT MAY BE OMITTED WHEN SOIL CONDITIONS WILL PERMIT.

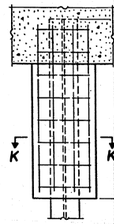

PILE ENCASEMENT DETAIL

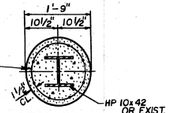

SECTION K-K

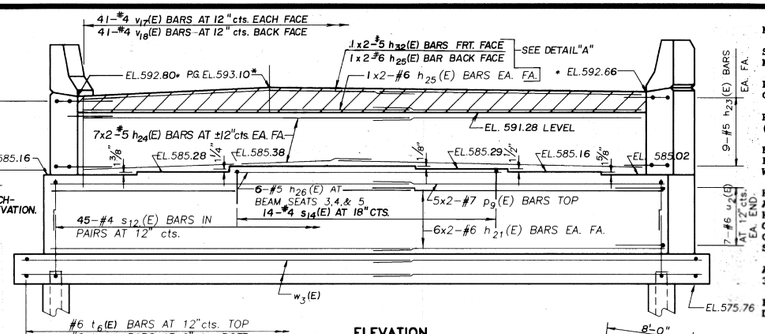

* ELEVATIONS ARE AT FRONT FACE OF HATCH-BLOCK AT DECK ELEVATION.

ELEVATION
(LOOKING EAST)

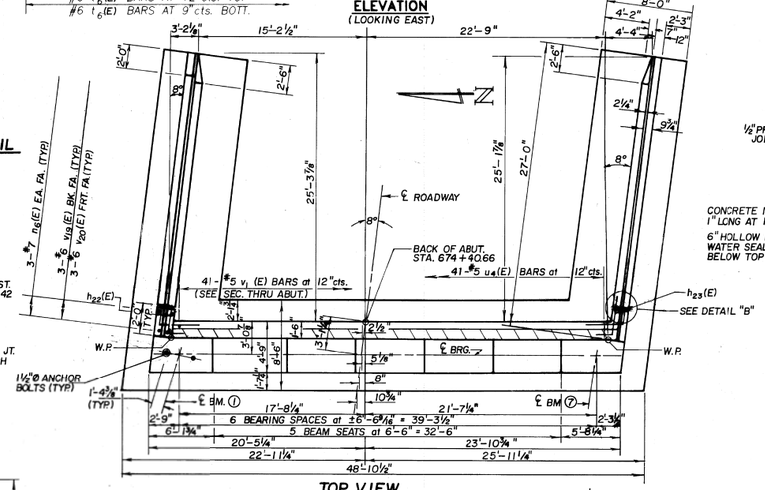

TOP VIEW

NOTES:

SPACE REINFORCEMENT IN CAPS TO MISS ANCHOR BOLTS.

POUR STEPS MONOLITHICALLY WITH CAP.

REINFORCEMENT BARS DESIGNATED (E) SHALL BE EPOXY COATED.

BARS INDICATED THUS 13x2 - #5 ETC. INDICATES 13 LINES OF BAR WITH 2 LENGTHS PER LINE.

HATCHED AREA TO BE POURED AFTER SUPERSTRUCTURE FORMS HAVE BEEN REMOVED. QUANTITY OF CONCRETE INCLUDED WITH CONCRETE SUPERSTRUCTURE ON SHEET #9 OF 47.

ALL EDGES SHALL HAVE STANDARD 3/4" CHAMFER EXCEPT AS SHOWN.

FOR ANCHOR BOLT INSTALLATION DETAILS SEE SHEET #40 OF 47.

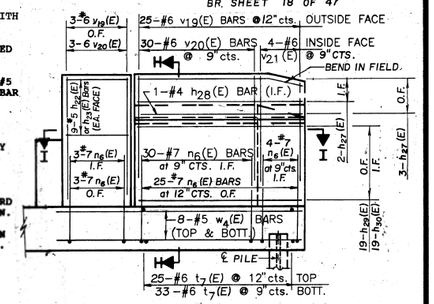

WING WALL ELEVATION
REINFORCEMENT

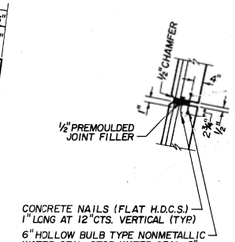

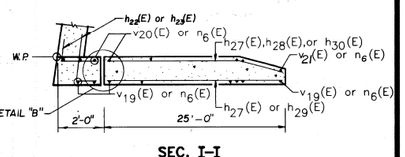

SEC. I-I

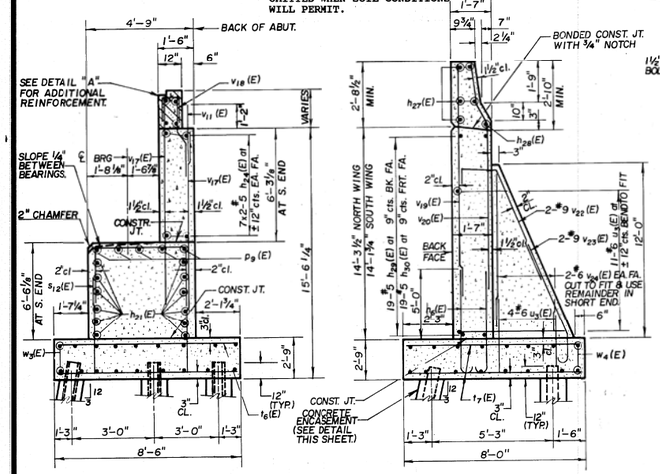

SEC. THRU ABUT.
(AT RIGHT ANGLES)

SEC. H-H
(THRU COUNTERFORT)

** PLACE h32(E) BAR IN BACK OF ANCHOR BOLT AS SHOWN IF REQUIRED TO MAINTAIN 1" cl. ANCHOR BOLTS SHOULD BE TIED TO h32(E) BARS.

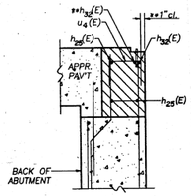

DETAIL "A"

PILE DATA

TYPE: STEEL PILE HP 10x42
CAPACITY: DRIVEN TO REFUSAL
EST. LENGTH: 56 FEET
NO. REQUIRED: 10

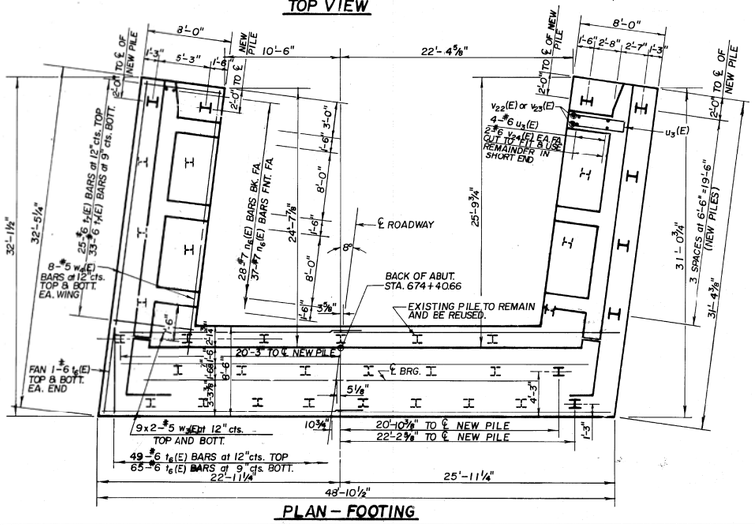

PLAN - FOOTING

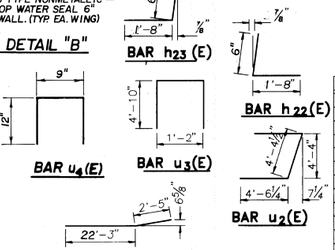

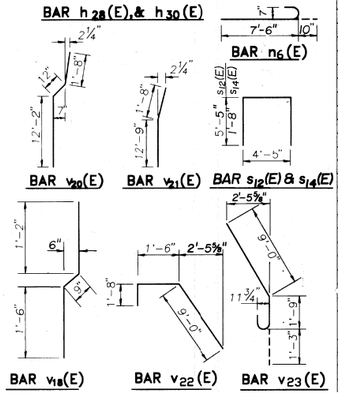

BAR LAPS

#4	1'-8"
#5	2'-2"
#6	2'-7"
#7	3'-5"
#9	5'-9"

ABUTMENT
BILL OF MATERIAL

BAR	NO.	SIZE	LENGTH	SHAPE
h21(E)	24	#6	23'-3"	
h22(E)	18	#5	2'-2"	
h23(E)	18	#5	2'-2"	
h24(E)	28	#5	23'-1"	
h25(E)	6	#6	21'-10"	
h26(E)	6	#5	19'-6"	
h27(E)	10	#4	24'-8"	
h28(E)	2	#4	24'-8"	
h29(E)	38	#5	24'-8"	
h30(E)	38	#5	24'-8"	
h32(E)	2	#5	21'-10"	
n6(E)	130	#7	8'-4"	
p9(E)	10	#7	23'-9"	
s12(E)	90	#4	15'-3"	
s14(E)	14	#4	7'-9"	
t6(E)	118	#6	8'-2"	
t7(E)	116	#6	7'-8"	
u2(E)	14	#6	13'-5"	
u3(E)	90	#7	10'-10"	
u4(E)	41	#5	2'-9"	
v11(E)	41	#5	2'-8"	
v17(E)	82	#4	9'-3"	
v18(E)	41	#4	3'-5"	
v19(E)	56	#6	14'-6"	
v20(E)	66	#6	14'-10"	
v21(E)	8	#6	14'-5"	
v22(E)	12	#9	12'-2"	
v23(E)	12	#9	12'-0"	
v24(E)	24	#6	11'-0"	
w3(E)	36	#5	25'-4"	
w4(E)	32	#5	26'-6"	
CONCRETE STRUCTURES		CU. YD.	202.8	
STRUCTURE EXCAVATION		CU. YD.	304	
REINFORCEMENT BARS (EPOXY COATED)		LBS.	19240	
FURN. STEEL PILE HP10x42		FOOT	560	
DRIVING STEEL PILES		FOOT	560	

EAST ABUTMENT
F.A.I. ROUTE 80 SEC.(50-2)BR
LASALLE COUNTY
STRUCTURE NO. 050-0220
STA. 672 + 19.43
(EASTBOUND STRUCTURE)

FOR INFORMATION ONLY

QUIGG ENGINEERING INC

USER NAME = mwilson	DESIGNED -	REVISED -
	DRAWN -	REVISED -
PLOT SCALE = 2.0000 ' / in.	CHECKED -	REVISED -
PLOT DATE = 10/2/2019	DATE - 10/4/2019	REVISED -

STATE OF ILLINOIS
DEPARTMENT OF TRANSPORTATION

EXISTING STRUCTURAL PLANS
STRUCTURE NO. 050-0220/0221

SCALE: | SHEET 20 OF 42 SHEETS | STA. | TO STA.

F.A.I RTE.	SECTION	COUNTY	TOTAL SHEETS	SHEET NO.
80	50-2(HB-2)BDR(HB-1)BR(BR)BR-1	LASALLE	328	269
		CONTRACT NO. 66H21		
		ILLINOIS	FED. AID PROJECT	

MODEL: Default
FILE NAME: \\Quigg\Projects\2018\IL018 Various Structure IDOT D3 Farnsworth PTB 161-21\Work Order 14 - I-80 Roadway and other\CADD\CADD Sheets\Existing Bridge Plans\0366H21-cht-Existing Bridge Plans 0228-0229 064.dgn

FAI ROUTE NO.	SEC	COUNTY	TOTAL SHEETS	SHEET NO
80	*	LASALLE	196	145

ILLINOIS PROJECT

BR. SHEET 19 OF 47
* (50-2)HBR-I, HB-2, BR

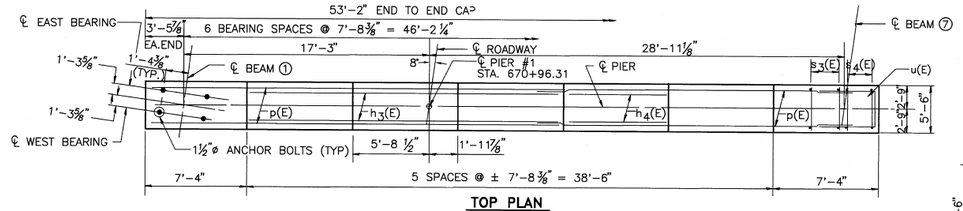

TOP PLAN

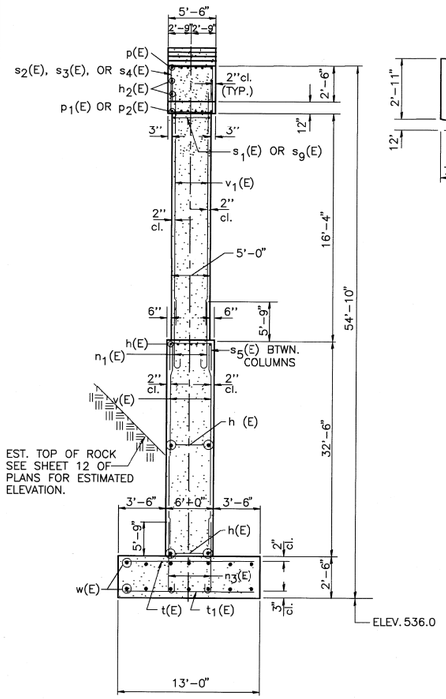

SOUTH END VIEW

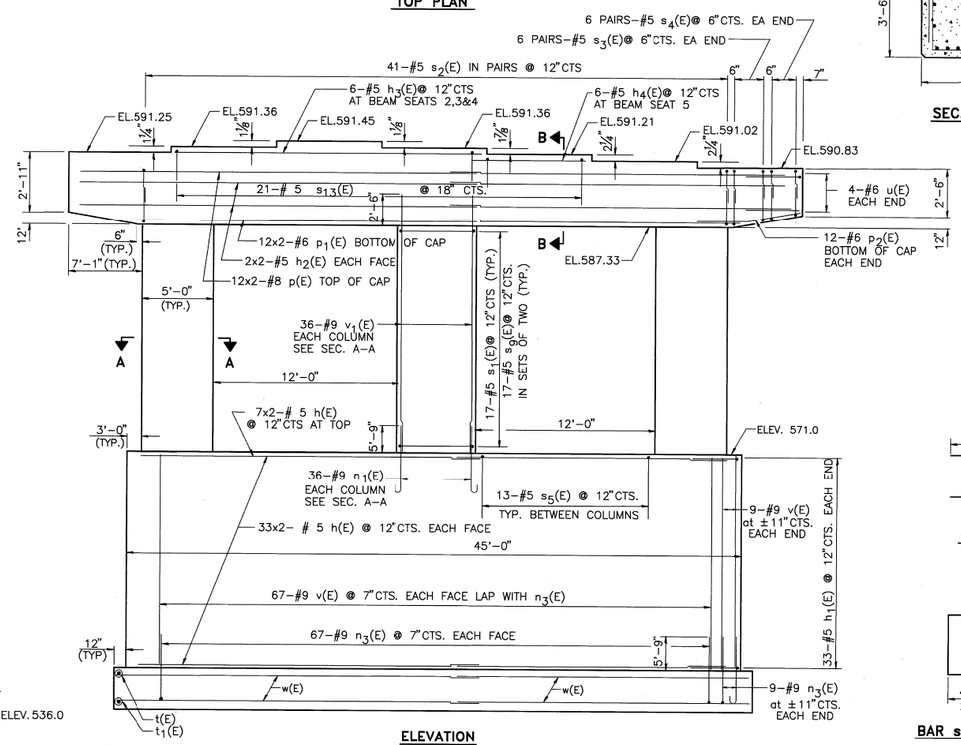

ELEVATION
(LOOKING EAST)

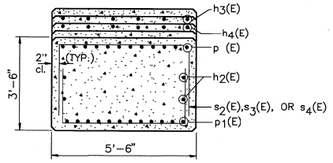

SEC. B-B

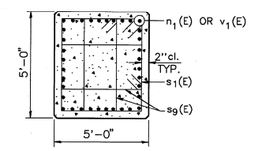

SEC. A-A

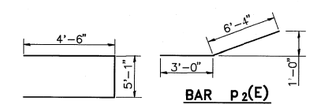

BAR u (E)

BAR p2(E)

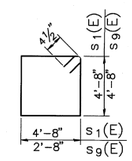

BAR s1(E) & s9(E)

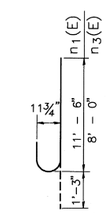

BAR n1(E) & n3(E)

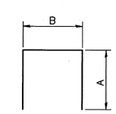

BAR s2(E), s3(E), s4(E), s5(E), & s13(E)

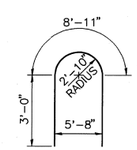

BAR h1(E)

BARS
A & B DIMENSIONS

Bar	A	B
s2(E)	2'-9"	5'-2"
s3(E)	2'-6"	5'-2"
s4(E)	2'-3"	5'-2"
s5(E)	3'-0"	5'-8"
s13(E)	2'-0"	5'-2"

MAX. SOIL PRESSURE
3.2 T.S.F.

MIN BAR LAP

# 5	BARS	3'-0"
# 6	BARS	2'-7"
# 7	BARS	3'-5"
# 8	BARS	6'-4"
# 9	BARS	5'-9"

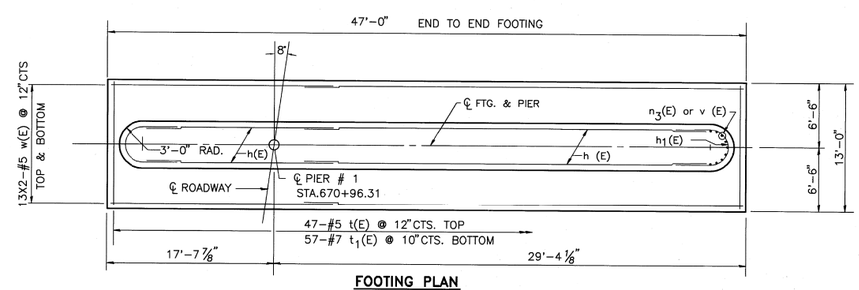

FOOTING PLAN

GENERAL NOTES

SPACE REINFORCEMENT IN CAP TO MISS ANCHOR BOLTS.

POUR STEPS MONOLITHICALLY WITH CAP.

ALL EDGES SHALL HAVE STANDARD ¾" CHAMFERS EXCEPT AS NOTED.

CONCRETE FOR THE PIER FOOTING SHALL BE POURED AGAINST ROCK. NO FORMING IS REQUIRED DURING CONSTRUCTION OF THE PIER FOOTING.

REINFORCEMENT BARS DESIGNATED (E) SHALL BE EPOXY COATED.

BARS INDICATED THUS 13x2-#5 ETC. INDICATES 13 LINES OF BARS WITH 2 LENGTHS PER LINE.

PIER FOOTINGS ARE TO BE SET ENTIRELY IN ROCK WITH A MINIMUM ADDITIONAL EMBEDMENT OF 12" IN REASONABLY SOUND ROCK, WHICHEVER IS DEEPER.

FOR ANCHOR BOLT INSTALLATION DETAILS SEE SHEET 40 OF 47.

ESTIMATED TOP OF ROCK ELEVATIONS WERE AVERAGED FROM SOIL BORINGS ON EITHER SIDE OF THE PIER. THE LIMITS AND SLOPE OF THE WEST FACE OF THE ACTUAL EXCAVATION FROM ORIGINAL PIER CONSTRUCTION IS NOT KNOWN. IF THE FINAL FOOTING ELEVATIONS ARE CHANGED DUE TO FIELD CONDITIONS THE CONCRETE, REINFORCEMENT AND EXCAVATION QUANTITIES SHALL BE ADJUSTED AS REQUIRED BY THE ENGINEER. THESE ADJUSTED QUANTITIES REQUIRED BY THE ENGINEER AND FURNISHED BY THE CONTRACTOR WILL BE PAID FOR AT THE UNIT PRICE BID FOR THE WORK. THE ENGINEER IN ACCORDANCE WITH ARTICLE 502.03 OF THE STANDARD SPECIFICATIONS SHALL DETERMINE THE ELEVATION AT WHICH THE IN PLACE MATERIAL QUALIFIES AS ROCK ELEVATION.

BILL OF MATERIAL

Bar	No.	Size	Length	Shape
h(E)	146	# 5	21'-0"	
h1(E)	66	# 5	14'-11"	
h2(E)	8	# 5	27'-11"	
h3(E)	6	# 5	22'-9"	
h4(E)	6	# 5	7'-8"	
n1(E)	108	# 9	12'-9"	
n3(E)	152	# 9	9'-3"	
p(E)	24	# 8	29'-7"	
p1(E)	24	# 6	21'-3"	
p2(E)	24	# 6	9'-4"	
s1(E)	51	# 5	19'-5"	
s2(E)	82	# 5	10'-8"	
s3(E)	24	# 5	10'-2"	
s4(E)	24	# 5	9'-8"	
s5(E)	26	# 5	11'-8"	
s9(E)	102	# 5	15'-5"	
s13(E)	21	# 5	9'-2"	
t(E)	47	# 5	12'-8"	
t1(E)	57	# 7	12'-8"	
u(E)	8	# 6	14'-1"	
v(E)	152	# 9	32'-4"	
v1(E)	108	# 9	18'-10"	
w(E)	52	# 5	24'-10"	
CONCRETE STRUCTURES			CU. YD.	458.3
REINFORCEMENT BARS EPOXY COATED			LBS.	48940
BRACED EXCAVATION			CU. YD.	514
ROCK EXCAVATION FOR STRUCTURES			CU. YD.	430

PIER # 1
F.A.I. ROUTE 80 SEC.(50-2)BR
LASALLE COUNTY
STR. NO.050-0220
STA. 672+19.43
(EASTBOUND STRUCTURE)

FOR INFORMATION ONLY

MODEL: Default
FILE NAME: \\QuiggProjects\2018\18IL018 Various Structure IDOT D3 Farnsworth PTB 161-21\Work Order 14 - I-80 Roadway and other\CADD\CADD Sheets\Existing Bridge Plans\0366H21-sht-Existing Bridge Plans 0228-0229 065.dgn

QUIGG ENGINEERING INC

USER NAME = mwilson	DESIGNED -	REVISED -	
	DRAWN -	REVISED -	
PLOT SCALE = 2.0000 ' / in.	CHECKED -	REVISED -	
PLOT DATE = 10/2/2019	DATE - 10/4/2019	REVISED -	

STATE OF ILLINOIS
DEPARTMENT OF TRANSPORTATION

EXISTING STRUCTURAL PLANS
STRUCTURE NO. 050-0220/0221

SCALE: | SHEET 21 OF 42 SHEETS | STA. | TO STA.

F.A.I RTE.	SECTION	COUNTY	TOTAL SHEETS	SHEET NO.
80	50-2(HB-2)BDR(HB-1)BR(BR)BR-1	LASALLE	328	270
		CONTRACT NO. 66H21		
		ILLINOIS	FED. AID PROJECT	

FAI ROUTE NO.	SEC	COUNTY	TOTAL SHEETS	SHEET NO
80	*	LASALLE	196	146
ILLINOIS PROJECT				

BR. SHEET 20 OF 47
* (50-2)HBR-I, HB-2, BR

GENERAL NOTES

SPACE REINFORCEMENT IN CAP TO MISS ANCHOR BOLTS.

POUR STEPS MONOLITHICALLY WITH CAP.

ALL EDGES SHALL HAVE STANDARD ¾" CHAMFERS EXCEPT AS NOTED.

CONCRETE FOR THE PIER FOOTING SHALL BE POURED AGAINST ROCK. NO FORMING IS REQUIRED DURING CONSTRUCTION OF THE PIER FOOTING.

REINFORCEMENT BARS DESIGNATED (E) SHALL BE EPOXY COATED.

BARS INDICATED THUS 13x2-#5 ETC. INDICATES 13 LINES OF BARS WITH 2 LENGTHS PER LINE.

PIER FOOTING IS TO BE SET ENTIRELY IN ROCK WITH A MINIMUM ADDITIONAL EMBEDMENT OF 12" IN REASONABLY SOUND ROCK, WHICHEVER IS DEEPER. UNDERCUT FOOTING ELEVATION 6" AND, IMMEDIATELY AFTER THE LAST LIFT OF EXCAVATION IS REMOVED POUR 6" OF SEAL COAT CONCRETE ON THE ROCK.

PRIOR TO REMOVING THE COFFERDAM, THE FOOTING SHALL BE BACKFILLED TO THE ORIGINAL BEDROCK SURFACE WITH LEAN CONCRETE. COST INCIDENTAL TO BACKFILLING.

ESTIMATED TOP OF ROCK ELEVATIONS WERE AVERAGED FROM SOIL BORINGS ON EITHER SIDE OF THE PIER. THE LIMITS AND SLOPE OF THE WEST FACE OF THE ACTUAL EXCAVATION FROM ORIGINAL PIER CONSTRUCTION IS NOT KNOWN. IF THE FINAL FOOTING ELEVATIONS ARE CHANGED DUE TO FIELD CONDITIONS THE CONCRETE, REINFORCEMENT AND EXCAVATION QUANTITIES SHALL BE ADJUSTED AS REQUIRED BY THE ENGINEER. THESE ADJUSTED QUANTITIES REQUIRED BY THE ENGINEER AND FURNISHED BY THE CONTRACTOR WILL BE PAID FOR AT THE UNIT PRICE BID FOR THE WORK. THE ENGINEER IN ACCORDANCE WITH ARTICLE 502.03 OF THE STANDARD SPECIFICATIONS SHALL DETERMINE THE ELEVATION AT WHICH THE IN PLACE MATERIAL QUALIFIES AS ROCK EXCAVATION.

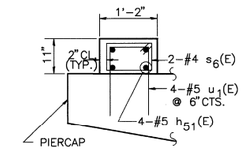

DETAIL "A"

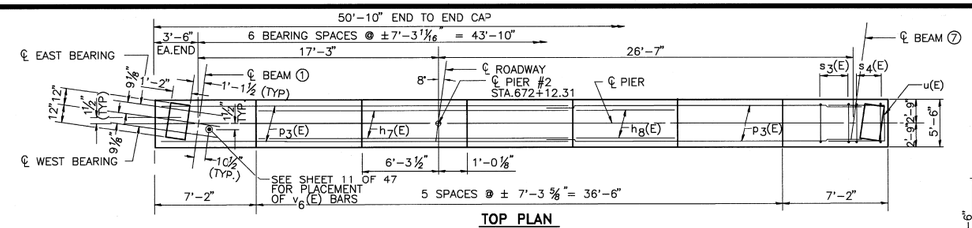

TOP PLAN

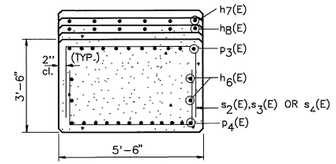

SEC. B-B

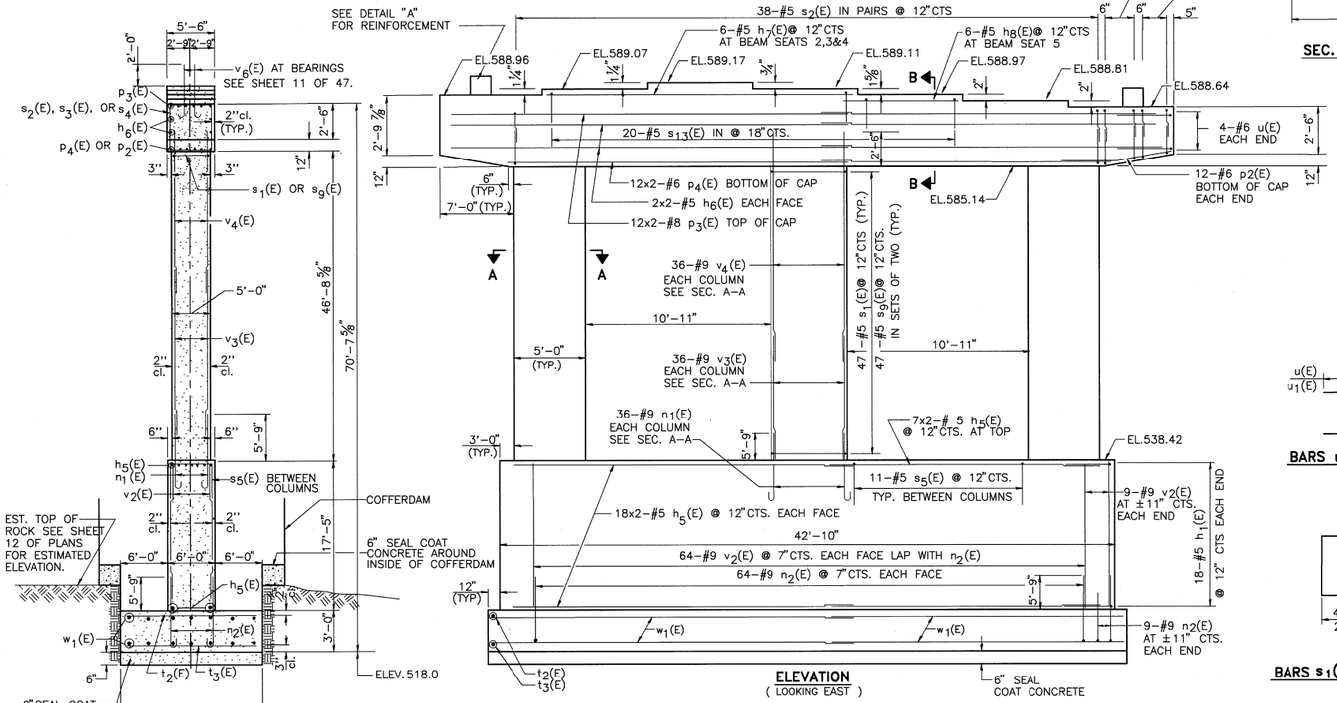

ELEVATION
(LOOKING EAST)

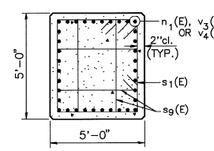

SEC. A-A

SOUTH END VIEW

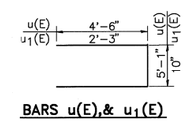

BARS u(E),& u1(E)

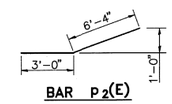

BAR p2(E)

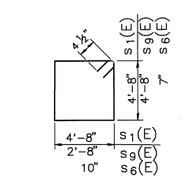

BARS s1(E),s6(E),& s9(E)

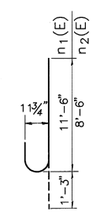

BARS n1(E) & n2(E)

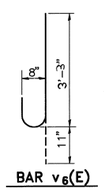

BAR v6(E)

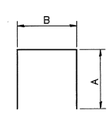

BARS s2(E), s3(E), s4(E), s5(E) & s13(E)

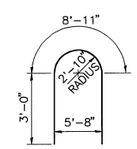

BAR h1(E)

BARS
A & B DIMENSIONS

Bar	A	B
s2(E)	2'-9"	5'-2"
s3(E)	2'-6"	5'-2"
s4(E)	2'-3"	5'-2"
s5(E)	3'-0"	5'-8"
s13(E)	2'-0"	5'-2"

BILL OF MATERIAL

Bar	No.	Size	Length	Shape
h1(E)	36	# 5	14'-11"	
h5(E)	86	# 5	19'-11"	
h6(E)	8	# 5	26'-9"	
h7(E)	6	# 5	21'-9"	
h8(E)	6	# 5	7'-3"	
h51(E)	8	# 5	1'-8"	
n1(E)	108	# 9	12'-9"	
n2(E)	146	# 9	9'-9"	
p2(E)	24	# 6	9'-4"	
p3(E)	24	# 8	28'-5"	
p4(E)	24	# 6	20'-3"	
s1(E)	141	# 5	19'-5"	
s2(E)	76	# 5	10'-8"	
s3(E)	28	# 5	10'-2"	
s4(E)	24	# 5	9'-8"	
s5(E)	22	# 5	11'-8"	
s6(E)	4	# 4	3'-7"	
s9(E)	282	# 5	15'-5"	
s13(E)	20	# 5	9'-2"	
t2(E)	45	# 5	17'-8"	
t3(E)	68	# 7	17'-8"	
u (E)	8	# 6	14'-1"	
u1(E)	8	# 5	5'-4"	
v2(E)	146	# 9	17'-3"	
v3(E)	108	# 9	28'-0"	
v4(E)	108	# 9	27'-3"	
v6(E)	72	# 8	4'-2"	
w1(E)	72	# 5	23'-9"	
CONCRETE STRUCTURES			CU. YD.	418.7
REINFORCEMENT BARS EPOXY COATED			LBS.	59350
COFFERDAMS			EACH	1
COFFERDAM EXCAVATION			CU. YD.	40
ROCK EXCAVATION FOR STRUCTURES			CU. YD.	105
SEAL COAT CONCRETE			CU. YD.	19.9

MAX. SOIL PRESSURE
2.5 T.S.F.

MIN. BAR LAP

# 5	BARS	3'-0"
# 6	BARS	2'-7"
# 7	BARS	3'-5"
# 8	BARS	6'-4"
# 9	BARS	5'-9"

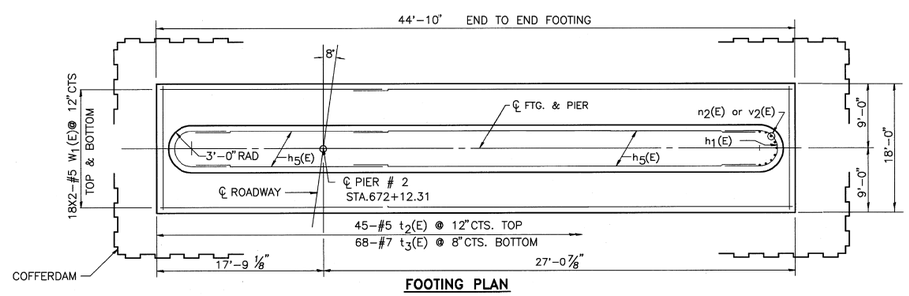

FOOTING PLAN

PIER # 2
F.A.I. ROUTE 80 SEC.(50-2)BR
LASALLE COUNTY
STR. NO.050-0220
STA. 672+19.43
(EASTBOUND STRUCTURE)

FOR INFORMATION ONLY

MODEL: Default
FILE NAME: \Quigg\Projects\2018\18L018 Various Structure IDOT D3 Farnsworth PTB 161-21\Work Order 14 - I-80 Roadway and other\CADD\CADD Sheets\Existing Bridge Plans\0366H21-sht-Existing Bridge Plans 0228-0229 066.dgn

QUIGG ENGINEERING INC

USER NAME = mwilson	DESIGNED -	REVISED -	
	DRAWN -	REVISED -	
PLOT SCALE = 2.0000 ' / in.	CHECKED -	REVISED -	
PLOT DATE = 10/2/2019	DATE - 10/4/2019	REVISED -	

STATE OF ILLINOIS
DEPARTMENT OF TRANSPORTATION

EXISTING STRUCTURAL PLANS
STRUCTURE NO. 050-0220/0221

SCALE: | SHEET 22 OF 42 SHEETS | STA. | TO STA.

F.A.I RTE.	SECTION	COUNTY	TOTAL SHEETS	SHEET NO.
80	50-2(HB-2)BDR(HB-1)BR(BR)BR-1	LASALLE	328	271
		CONTRACT NO. 66H21		
		ILLINOIS	FED. AID PROJECT	

FAI ROUTE NO.	SEC	COUNTY	TOTAL SHEETS	SHEET NO
80	*	LASALLE	196	147
ILLINOIS PROJECT				

BR. SHEET 21 OF 47
* (50-2)HBR-I, HB-2, BR

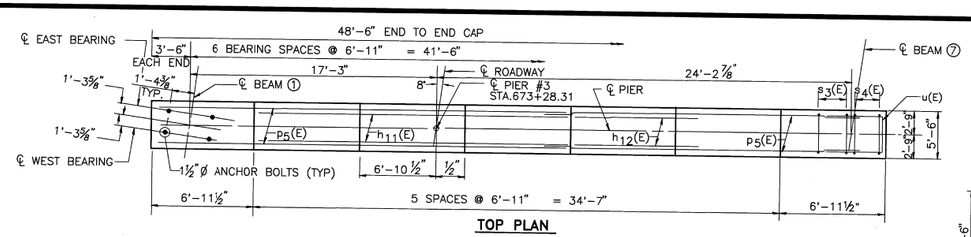

TOP PLAN

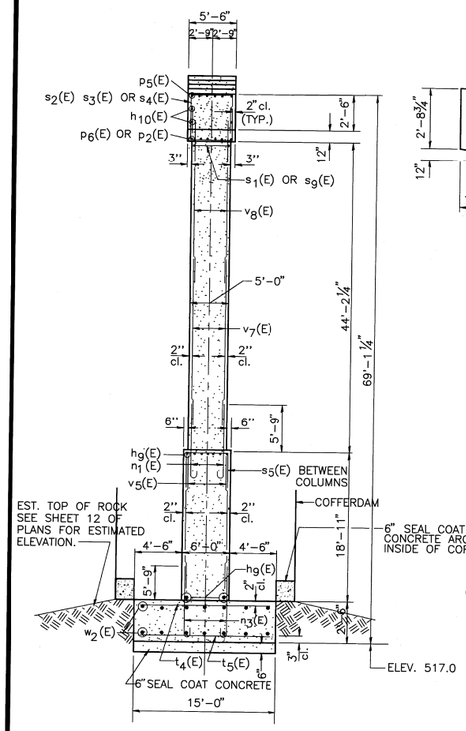

SOUTH END VIEW

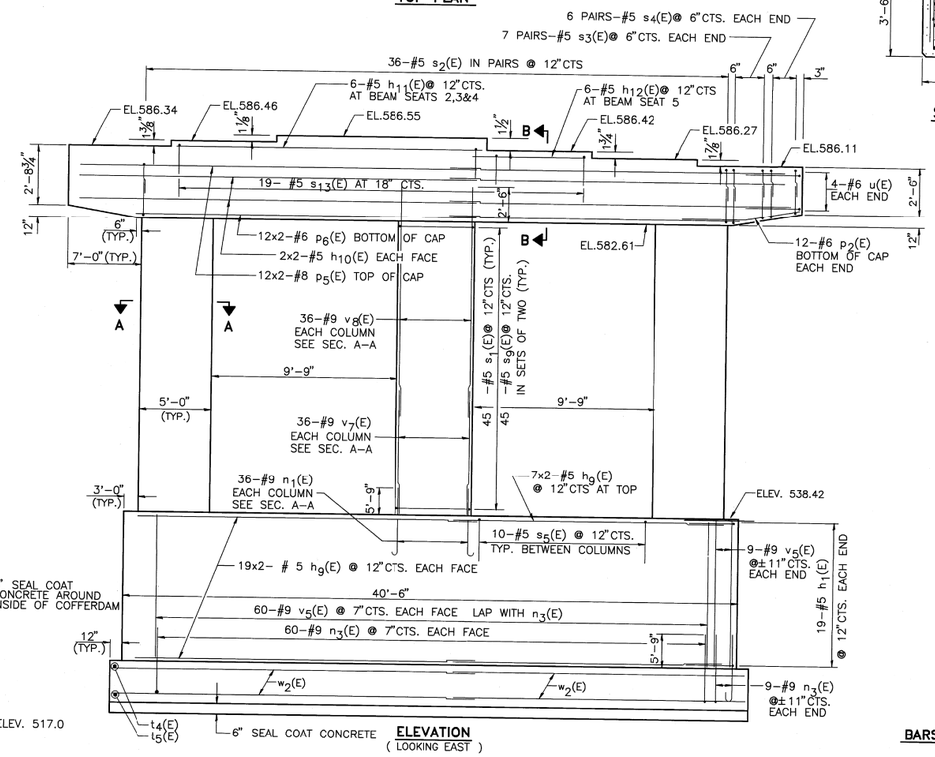

ELEVATION
(LOOKING EAST)

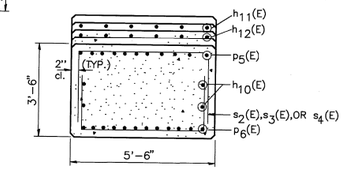

SEC. B-B

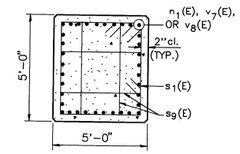

SEC. A-A

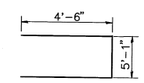

BAR u(E)

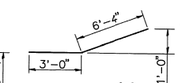

BAR p2(E)

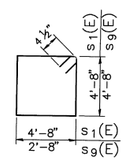

BARS s1(E) & s9(E)

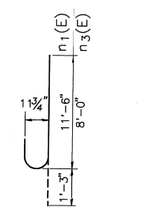

BARS n1(E) &n3(E)

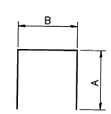

BAR s2(E), s3(E), s4(E), s5(E),& s13(E)

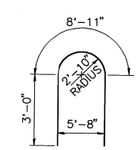

BAR h1(E)

BARS
A & B DIMENSIONS

Bar	A	B
s2(E)	2'-9"	5'-2"
s3(E)	2'-6"	5'-2"
s4(E)	2'-3"	5'-2"
s5(E)	3'-0"	5'-8"
s13(E)	2'-0"	5'-2"

GENERAL NOTES

SPACE REINFORCEMENT IN CAP TO MISS ANCHOR BOLTS.

POUR STEPS MONOLITHICALLY WITH CAP.

ALL EDGES SHALL HAVE STANDARD 3/4" CHAMFERS EXCEPT AS NOTED.

CONCRETE FOR THE PIER FOOTING SHALL BE POURED AGAINST ROCK. NO FORMING IS REQUIRED DURING CONSTRUCTION OF THE PIER FOOTING.

REINFORCEMENT BARS DESIGNATED (E) SHALL BE EPOXY COATED.

BARS INDICATED THUS 13x2-#5 ETC. INDICATES 13 LINES OF BARS WITH 2 LENGTHS PER LINE.

PIER FOOTING IS TO BE SET ENTIRELY IN ROCK WITH A MINIMUM ADDITIONAL EMBEDMENT OF 12" IN REASONABLY SOUND ROCK, WHICHEVER IS DEEPER UNDERCUT FOOTING ELEVATION 6" AND, IMMEDIATELY AFTER THE LAST LIFT OF EXCAVATION IS REMOVED POUR 6" OF SEAL COAT CONCRETE ON THE ROCK.

PRIOR TO REMOVING THE COFFERDAM, THE FOOTING SHALL BE BACKFILLED TO THE ORIGINAL BEDROCK SURFACE WITH LEAN CONCRETE. COST INCIDENTAL TO BACKFILLING.

FOR ANCHOR BOLT INSTALLATION DETAILS SEE SHEET 40 OF 47.

ESTIMATED TOP OF ROCK ELEVATIONS WERE AVERAGED FROM SOIL BORINGS ON EITHER SIDE OF THE PIER. THE LIMITS AND SLOPE OF THE WEST FACE OF THE ACTUAL EXCAVATION FROM ORIGINAL PIER CONSTRUCTION IS NOT KNOWN. IF THE FINAL FOOTING ELEVATIONS ARE CHANGED DUE TO FIELD CONDITIONS THE CONCRETE, REINFORCEMENT AND EXCAVATION QUANTITIES SHALL BE ADJUSTED AS REQUIRED BY THE ENGINEER. THESE ADJUSTED QUANTITIES REQUIRED BY THE ENGINEER AND FURNISHED BY THE CONTRACTOR WILL BE PAID FOR AT THE UNIT PRICE BID FOR THE WORK. THE ENGINEER IN ACCORDANCE WITH ARTICLE 502.03 OF THE STANDARD SPECIFICATIONS SHALL DETERMINE THE ELEVATION AT WHICH THE IN PLACE MATERIAL QUALIFIES AS ROCK EXCAVATION.

BILL OF MATERIAL

Bar	No.	Size	Length	Shape
h1(E)	38	# 5	14'-11"	
h9(E)	90	# 5	18'-9"	
h10(E)	8	# 5	25'-7"	
h11(E)	6	# 5	20'-6"	
h12(E)	6	# 5	6'-11"	
n1(E)	108	# 9	12'-9"	
n3(E)	138	# 9	9'-3"	
p2(E)	24	# 6	9'-4"	
p5(E)	24	# 8	27'-3"	
p6(E)	24	# 6	19'-0"	
s1(E)	135	# 5	19'-5"	
s2(E)	72	# 5	10'-8"	
s3(E)	28	# 5	10'-2"	
s4(E)	24	# 5	9'-8"	
s5(E)	20	# 5	11'-8"	
s9(E)	270	# 5	15'-5"	
s13(E)	19	# 5	9'-2"	
t4(E)	43	# 5	14'-8"	
t5(E)	57	# 7	14'-8"	
u(E)	8	# 6	14'-1"	
v5(E)	138	# 9	18'-9"	
v7(E)	108	# 9	27'-0"	
v8(E)	108	# 9	25'-8"	
w2(E)	60	# 5	22'-7"	
CONCRETE STRUCTURES			CU. YD.	382.6
REINFORCEMENT BARS EPOXY COATED			LBS.	55460
COFFERDAM EXCAVATION			CU. YD.	295
SEAL COAT CONCRETE			CU. YD.	16.4
ROCK EXCAVATION FOR STRUCTURES			CU. YD.	106
COFFERDAMS			EACH	1

MAX. SOIL PRESSURE
3.0 T.S.F.

MIN. BAR LAP

# 5	BARS	3'-0"
# 6	BARS	2'-7"
# 7	BARS	3'-5"
# 8	BARS	6'-4"
# 9	BARS	5'-9"

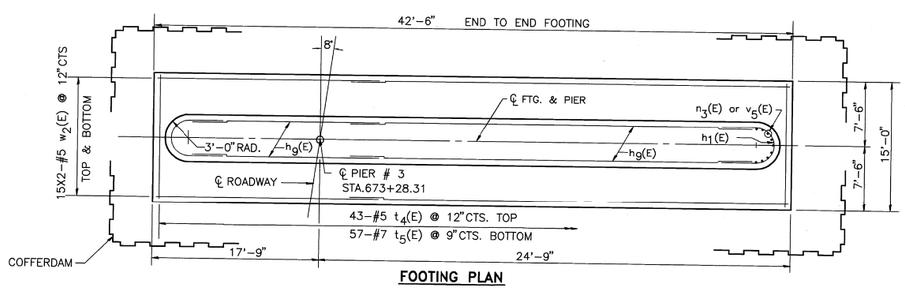

FOOTING PLAN

PIER # 3
F.A.I. ROUTE 80 SEC.(50-2)BR
LASALLE COUNTY
STR. NO.050-0220
STA. 672+19.43
(EASTBOUND STRUCTURE)

FOR INFORMATION ONLY

MODEL: Default
FILE NAME: \\QuigigProjects\2018\18L018 Various Structure IDOT D3 Farnsworth PTB 161-2 \Work Order 14 - I-80 Roadway and other\CADD\CADD Sheets\Existing Bridge Plans\D366H21-sht-Existing Bridge Plans 0228-0229 067.dgn

QUIGG ENGINEERING INC

USER NAME = mwilson	DESIGNED -	REVISED -	
	DRAWN -	REVISED -	
PLOT SCALE = 2.0000 ' / in.	CHECKED -	REVISED -	
PLOT DATE = 10/2/2019	DATE - 10/4/2019	REVISED -	

STATE OF ILLINOIS
DEPARTMENT OF TRANSPORTATION

EXISTING STRUCTURAL PLANS
STRUCTURE NO. 050-0220/0221

SCALE: SHEET 23 OF 42 SHEETS STA. TO STA.

F.A.I RTE.	SECTION	COUNTY	TOTAL SHEETS	SHEET NO.
80	50-2(HB-2)BDR(HB-1)BR(BR)BR-1	LASALLE	328	272
		CONTRACT NO. 66H21		
	ILLINOIS	FED. AID PROJECT		

F.A.I. ROUTE NO.	SEC.	COUNTY	TOTAL SHEETS	SHEET NO.
80	*	LASALLE	196	148
ILLINOIS PROJECT				

BR. SHEET 22 OF 47
* (50-2)HBR-1, HB-2, BR

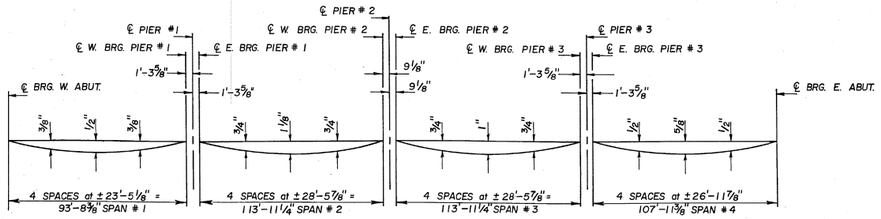

DEAD LOAD DEFLECTION DIAGRAM

(INCLUDES WEIGHT OF CONCRETE SLAB ONLY)

NOTE: THE ABOVE DEFLECTIONS ARE NOT TO BE USED IN THE FIELD IF THE ENGINEER IS WORKING FROM THE GRADE ELEVATIONS ADJUSTED FOR DEAD LOAD DEFLECTIONS AS SHOWN ON SHEETS 23,24, & 25 OF 47.

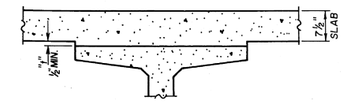

TO DETERMINE "t": AFTER ALL PRECAST PRESTRESSED BEAMS HAVE BEEN ERECTED, ELEVATIONS OF THE TOP FLANGES OF THE BEAMS SHALL BE TAKEN AT INTERVALS SHOWN ON THIS SHEET AND SHEETS 23,24,& 25 OF 47. THESE ELEVATIONS SUBTRACTED FROM THE "THEORETICAL GRADE ELEVATIONS ADJUSTED FOR DEAD LOAD DEFLECTIONS" MINUS SLAB THICKNESS, EQUALS THE FILLET HEIGHTS "t" ABOVE TOP FLANGES OF BEAMS.

FILLET HEIGHTS

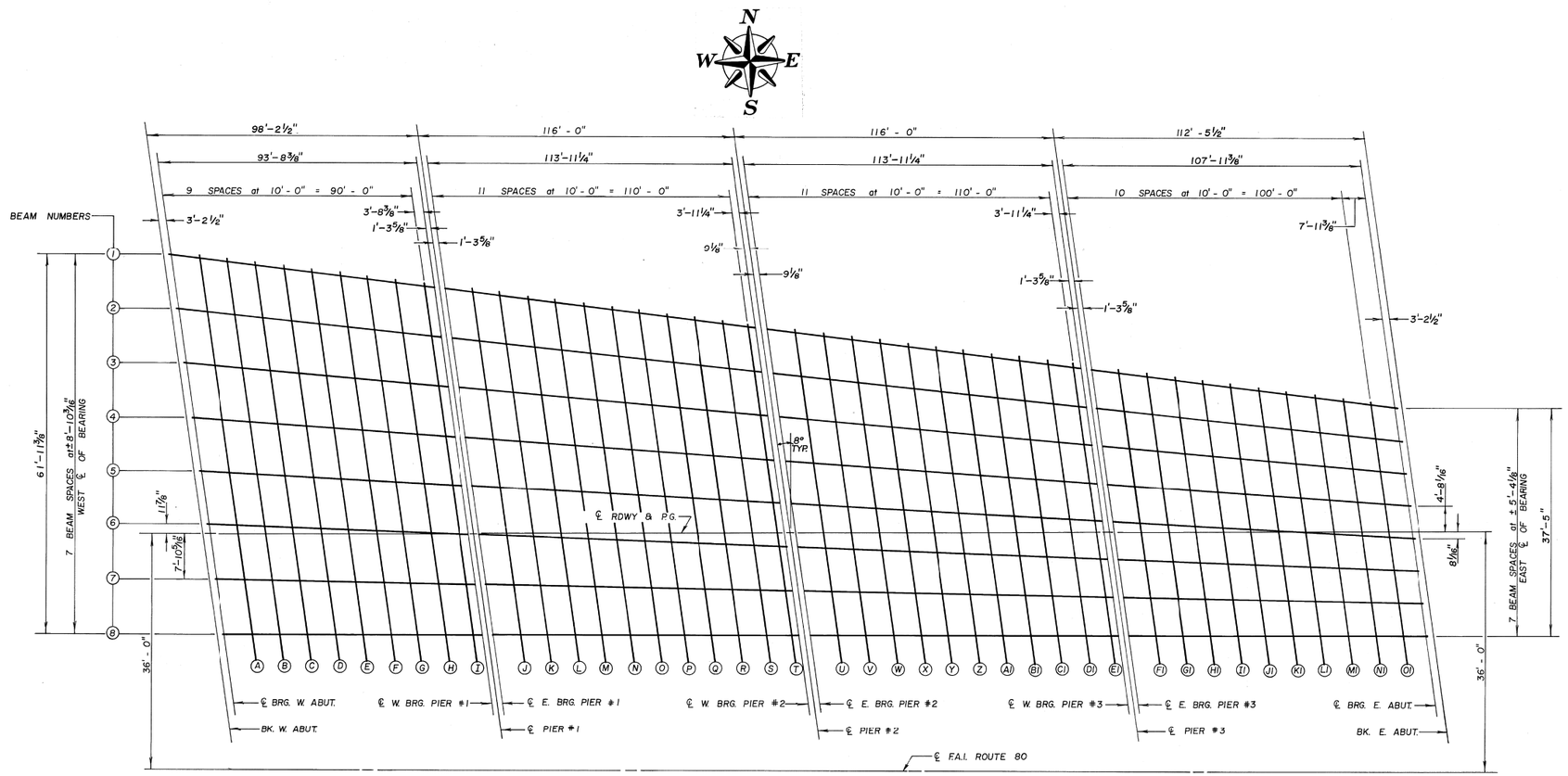

PLAN

TOP OF SLAB ELEVATION
FAI ROUTE 80 SEC (50-2) BR
LA SALLE COUNTY
STRUCTURE NO. 050-0221
STA. 672+09.32

(WESTBOUND STRUCTURE)

FOR INFORMATION ONLY

MODEL: Default
FILE NAME: \\QuiggProjects\2018\18\018 Various Structure IDOT D3 Farnsworth PTB 161-21\Work Order 14 - I-80 Roadway and other\CADD\CADD Sheets\Existing Bridge Plans\D366H21-cht-Existing Bridge Plans 0228-0229 068.dgn

QUIGG ENGINEERING INC

USER NAME = mwilson	DESIGNED -	REVISED -	
	DRAWN -	REVISED -	
PLOT SCALE = 2.0000 ' / in.	CHECKED -	REVISED -	
PLOT DATE = 10/2/2019	DATE - 10/4/2019	REVISED -	

STATE OF ILLINOIS
DEPARTMENT OF TRANSPORTATION

EXISTING STRUCTURAL PLANS
STRUCTURE NO. 050-0220/0221

SCALE: | SHEET 24 OF 42 SHEETS | STA. | TO STA.

F.A.I. RTE.	SECTION	COUNTY	TOTAL SHEETS	SHEET NO.
80	50-2(HB-2)BDR(HB-1)BR(BR)BR-1	LASALLE	328	273
		CONTRACT NO. 66H21		
	ILLINOIS	FED. AID PROJECT		

FAI ROUTE NO.	SEC	COUNTY	TOTAL SHEETS	SHEET NO
80	*	LASALLE	196	149

ILLINOIS PROJECT

BR. SHEET 23 OF 47

* (50-2)HBR-I, HB-2, BR

WESTBOUND BEAM #1

LOCATION	STATION	OFFSET	THEORETICAL GRADE ELEVATIONS	THEORETICAL GRADE ELEVATIONS ADJUSTED FOR DEAD LOAD DEFLECTION
BK. W. ABUT.	66981.627	45.419	601.677	601.677
CL BRG. W. ABUT.	66984.832	45.240	601.585	601.585
A	66994.832	44.682	601.297	601.316
B	67004.832	44.124	601.008	601.044
C	67014.832	43.566	600.720	600.768
D	67024.832	43.008	600.432	600.488
E	67034.832	42.450	600.143	600.200
F	67044.832	41.892	599.855	599.907
G	67054.832	41.334	599.566	599.608
H	67064.832	40.777	598.278	598.305
I	67074.832	40.219	598.990	598.999
CL W. BRG. PIER #1	67079.268	39.971	598.864	598.864
CL. BRG. PIER #1	67080.582	39.898	598.826	598.826
CL E. BRG. PIER #1	67081.897	39.824	598.789	598.789
J	67091.897	39.266	598.510	598.541
K	67101.897	38.708	598.237	598.297
L	67111.897	38.150	597.971	598.055
M	67121.897	37.592	597.711	597.813
N	67131.897	37.034	597.457	597.569
O	67141.897	36.476	597.211	597.325
P	67151.897	35.918	596.969	597.076
Q	67161.897	35.361	596.735	596.828
R	67171.897	34.803	596.506	596.578
S	67181.897	34.245	596.284	596.330
T	67191.897	33.687	596.069	596.085
CL W. BRG. PIER #2	67196.736	33.417	595.966	595.966
CL BRG. PIER #2	67197.499	33.375	595.950	595.950
CL E. BRG. PIER #2	67198.262	33.332	595.934	595.934
U	67208.262	32.774	595.729	595.757
V	67218.262	32.216	595.529	595.582
W	67228.262	31.658	595.337	595.412
X	67238.262	31.100	595.151	595.241
Y	67248.262	30.542	594.970	595.069
Z	67258.262	29.984	594.797	594.898
A1	67268.262	29.426	594.629	594.724
B1	67278.262	28.869	594.468	594.551
C1	67288.262	28.311	594.314	594.378
D1	67298.262	27.753	594.164	594.205
E1	67308.262	27.195	594.023	594.037
CL W. BRG. PIER #3	67313.101	26.925	593.957	593.957
CL BRG. PIER #3	67314.416	26.852	593.938	593.938
CL E. BRG. PIER #3	67315.730	26.778	593.921	593.921
F1	67325.730	26.220	593.789	593.810
G1	67335.730	25.662	593.665	593.705
H1	67345.730	25.104	593.547	593.602
I1	67355.730	24.546	593.434	593.500
J1	67365.730	23.988	593.328	593.399
K1	67375.730	23.430	593.228	593.299
L1	67385.730	22.872	593.135	593.200
M1	67395.730	22.315	593.049	593.102
N1	67405.730	22.757	592.968	592.939
O1	67415.730	21.199	592.894	592.913
CL BRG. E. ABUT.	67424.529	20.708	592.834	592.834
BK. E. ABUT.	67427.733	20.529	592.813	592.813

WESTBOUND BEAM #2

LOCATION	STATION	OFFSET	THEORETICAL GRADE ELEVATIONS	THEORETICAL GRADE ELEVATIONS ADJUSTED FOR DEAD LOAD DEFLECTION
BK. W. ABUT.	66982.871	36.543	601.825	601.825
CL BRG. W. ABUT.	66986.075	36.390	601.732	601.732
A	66996.075	35.911	601.442	601.461
B	67006.075	35.432	601.152	601.188
C	67016.075	34.954	600.862	600.910
D	67026.075	34.475	600.572	600.628
E	67036.075	33.996	600.282	600.339
F	67046.075	33.517	599.992	600.044
G	67056.075	33.039	599.702	599.744
H	67066.075	32.560	599.412	599.439
I	67076.075	32.081	599.122	599.131
CL W. BRG. PIER #1	67080.406	31.874	598.998	598.998
CL. BRG. PIER #1	67081.719	31.811	598.961	598.961
CL E. BRG. PIER #1	67083.032	31.748	598.924	598.924
J	67093.032	31.269	598.644	598.675
K	67103.032	30.790	598.370	598.430
L	67113.032	30.312	598.103	598.187
M	67123.032	29.833	597.842	597.944
N	67133.032	29.354	597.588	597.700
O	67143.032	28.875	597.340	597.454
P	67153.032	28.397	597.098	597.205
Q	67163.032	27.918	596.862	596.955
R	67173.032	27.439	596.633	596.705
S	67183.032	26.960	596.410	596.456
T	67193.032	26.482	596.193	596.209
CL W. BRG. PIER #2	67197.742	26.256	596.094	596.094
CL BRG. PIER #2	67198.505	26.220	596.077	596.077
CL E. BRG. PIER #2	67199.267	26.183	596.061	596.061
U	67209.267	25.704	595.855	595.883
V	67219.267	25.225	595.655	595.708
W	67229.267	24.747	595.461	595.536
X	67239.267	24.268	595.273	595.363
Y	67249.267	23.789	595.092	595.191
Z	67259.267	23.310	594.917	594.018
A1	67269.267	22.832	594.749	594.844
B1	67279.267	22.353	594.587	594.670
C1	67289.267	21.874	594.431	594.495
D1	67299.267	21.395	594.282	594.323
E1	67309.267	20.917	594.139	594.153
CL W. BRG. PIER #3	67313.977	20.692	594.073	594.073
CL BRG. PIER #3	67315.290	20.629	594.055	594.055
CL E. BRG. PIER #3	67316.604	20.566	594.037	594.037
F1	67326.604	20.087	593.905	593.926
G1	67336.604	19.608	593.779	593.819
H1	67346.604	19.130	593.660	593.715
I1	67356.604	18.651	593.546	593.612
J1	67366.604	18.172	593.439	593.510
K1	67376.604	17.693	593.339	593.410
L1	67386.604	17.215	593.245	593.310
M1	67396.604	16.736	593.157	593.210
N1	67406.604	16.257	593.075	593.113
O1	67416.604	15.778	593.000	593.019
CL BRG. E. ABUT.	67425.280	15.363	592.939	592.939
BK. E. ABUT.	67428.485	15.210	592.919	592.919

WESTBOUND BEAM #3

LOCATION	STATION	OFFSET	THEORETICAL GRADE ELEVATIONS	THEORETICAL GRADE ELEVATIONS ADJUSTED FOR DEAD LOAD DEFLECTION
BK. W. ABUT.	66984.115	27.668	601.973	601.973
CL BRG. W. ABUT.	66987.319	27.540	601.879	601.879
A	66997.319	27.141	601.587	601.606
B	67007.319	26.741	601.295	601.331
C	67017.319	26.342	601.003	601.051
D	67027.319	25.942	600.711	600.767
E	67037.319	25.543	600.420	600.477
F	67047.319	25.144	600.129	600.181
G	67057.319	24.744	599.837	599.879
H	67067.319	24.345	599.542	599.569
I	67077.319	23.945	599.255	599.264
CL W. BRG. PIER #1	67081.544	23.777	599.134	599.134
CL. BRG. PIER #1	67082.855	23.724	599.096	599.096
CL E. BRG. PIER #1	67084.167	23.660	599.060	599.060
J	67094.167	23.261	598.779	598.810
K	67104.167	22.861	598.504	598.564
L	67114.167	22.462	598.236	598.320
M	67124.167	22.062	597.974	598.076
N	67134.167	21.663	597.718	597.830
O	67144.167	21.264	597.469	597.583
P	67154.167	20.864	597.226	597.333
Q	67164.167	20.465	596.990	597.083
R	67174.167	20.065	596.759	596.831
S	67184.167	19.666	596.536	596.582
T	67194.167	19.267	596.318	596.324
CL W. BRG. PIER #2	67198.748	19.096	596.220	596.220
CL BRG. PIER #2	67199.510	19.065	596.204	596.204
CL E. BRG. PIER #2	67200.272	19.035	596.188	596.188
U	67210.272	18.636	595.980	596.008
V	67220.272	18.236	595.779	595.832
W	67230.272	17.837	595.585	595.660
X	67240.272	17.437	595.396	595.486
Y	67250.272	17.038	595.213	595.312
Z	67260.272	16.639	595.038	595.139
A1	67270.272	16.239	594.869	594.964
B1	67280.272	15.840	594.705	594.788
C1	67290.272	15.440	594.549	594.613
D1	67300.272	15.041	594.398	594.439
E1	67310.272	14.642	594.254	594.268
CL W. BRG. PIER #3	67314.853	14.458	594.190	594.190
CL BRG. PIER #3	67316.165	14.406	594.172	594.172
CL E. BRG. PIER #3	67317.477	14.354	594.154	594.154
F1	67327.477	13.955	594.021	594.042
G1	67337.477	13.555	593.894	593.934
H1	67347.477	13.156	593.773	593.828
I1	67357.477	12.756	593.659	593.725
J1	67367.477	12.357	593.551	593.622
K1	67377.477	11.958	593.449	593.520
L1	67387.477	11.558	593.351	593.416
M1	67397.477	11.159	593.260	593.313
N1	67407.477	10.759	593.175	593.213
O1	67417.477	10.360	593.097	593.116
CL BRG. E. ABUT.	67426.032	10.018	593.034	593.034
BK. E. ABUT.	67429.236	9.890	593.012	593.012

TOP OF SLAB ELEVATIONS
F.A.I. ROUTE 80 SEC. (50-2)BR
LASALLE COUNTY
STR. NO. 050-0221
STA. 672+09.32
(WESTBOUND STRUCTURE)

FOR INFORMATION ONLY

MODEL: Default
FILE NAME: \\QuiggProjects\2018\18L018 Various Structure IDOT 03 Farnsworth PTB 161-21\Work Order 14 - I-80 Roadway and other\CADD\CADD Sheets\Existing Bridge Plans\D366172-sht-Existing Bridge Plans 0228-0229 069.dgn

QUIGG ENGINEERING INC

USER NAME = mwilson	DESIGNED -	REVISED -	
	DRAWN -	REVISED -	
PLOT SCALE = 2.0000 ' / in.	CHECKED -	REVISED -	
PLOT DATE = 10/2/2019	DATE - 10/4/2019	REVISED -	

STATE OF ILLINOIS
DEPARTMENT OF TRANSPORTATION

EXISTING STRUCTURAL PLANS
STRUCTURE NO. 050-0220/0221

SCALE: | SHEET 25 OF 42 SHEETS | STA. TO STA.

F.A.I RTE.	SECTION	COUNTY	TOTAL SHEETS	SHEET NO.
80	50-2(HB-2)BDR(HB-1)BR(BR)BR-1	LASALLE	328	274
		CONTRACT NO. 66H21		
	ILLINOIS	FED. AID PROJECT		

WESTBOUND BEAM #4

LOCATION	STATION	OFFSET	THEORETICAL GRADE ELEVATIONS	THEORETICAL GRADE ELEVATIONS ADJUSTED FOR DEAD LOAD DEFLECTION
BK. W. ABUT.	66985.359	18.792	602.120	602.120
CL BRG. W. ABUT.	66988.563	18.690	602.026	602.026
A	66998.563	18.370	601.733	601.752
B	67008.563	18.050	601.439	601.475
C	67018.563	17.730	601.146	601.194
D	67028.563	17.410	600.853	600.909
E	67038.563	17.091	600.559	600.616
F	67048.563	16.771	600.266	600.318
G	67058.563	16.451	599.973	600.015
H	67068.563	16.131	599.680	599.707
I	67078.563	15.811	599.387	599.396
CL W. BRG. PIER #1	67082.681	15.679	599.269	599.269
CL. BRG. PIER #1	67083.992	15.637	599.232	599.232
CL E. BRG. PIER #1	67085.302	15.595	599.195	599.195
J	67095.302	15.275	598.913	598.944
K	67105.302	14.955	598.637	598.697
L	67115.302	14.635	598.368	598.452
M	67125.302	14.315	598.106	598.208
N	67135.302	13.996	597.849	597.961
O	67145.302	13.676	597.599	597.713
P	67155.302	13.356	597.354	597.461
Q	67165.302	13.036	597.117	597.210
R	67175.302	12.716	596.886	596.958
S	67185.302	12.396	596.661	596.707
T	67195.302	12.076	596.443	596.459
CL W. BRG. PIER #2	67199.755	11.934	596.347	596.347
CL BRG. PIER #2	67200.516	11.910	596.331	596.331
CL E. BRG. PIER #2	67201.276	11.886	596.314	596.314
U	67211.276	11.566	596.104	596.130
V	67221.276	11.246	595.900	595.953
W	67231.276	10.926	595.703	595.778
X	67241.276	10.606	595.512	595.602
Y	67251.276	10.287	595.327	595.426
Z	67261.276	9.967	595.148	595.249
A1	67271.276	9.647	594.976	595.071
B1	67281.276	9.327	594.810	594.893
C1	67291.276	9.007	594.651	594.715
D1	67301.276	8.687	594.497	594.538
E1	67311.276	8.367	594.351	594.365
CL W. BRG. PIER #3	67315.729	8.224	594.287	594.287
CL BRG. PIER #3	67317.039	8.183	594.269	594.269
CL E. BRG. PIER #3	67318.350	8.141	594.251	594.251
F1	67328.350	7.821	594.115	594.136
G1	67338.350	7.501	593.985	594.025
H1	67348.350	7.181	593.862	593.917
I1	67358.350	6.861	593.744	593.810
J1	67368.350	6.542	593.634	593.705
K1	67378.350	6.222	593.529	593.600
L1	67388.350	5.902	593.431	593.496
M1	67398.350	5.582	593.339	593.392
N1	67408.350	5.262	593.254	593.292
O1	67418.350	4.942	593.175	593.194
CL BRG. E. ABUT.	67426.783	4.672	593.112	593.112
BK. E. ABUT.	67429.987	4.569	593.091	593.091

WESTBOUND BEAM #5

LOCATION	STATION	OFFSET	THEORETICAL GRADE ELEVATIONS	THEORETICAL GRADE ELEVATIONS ADJUSTED FOR DEAD LOAD DEFLECTION
BK. W. ABUT.	66986.602	9.918	602.257	
CL BRG. W. ABUT.	66989.807	9.841	602.162	602.162
A	66999.807	9.601	601.866	601.885
B	67009.807	9.361	601.570	601.606
C	67019.807	9.120	601.273	601.321
D	67029.807	8.880	600.977	601.033
E	67039.807	8.640	600.681	600.738
F	67049.807	8.400	600.385	600.437
G	67059.807	8.160	600.088	600.130
H	67069.807	7.919	599.792	599.819
I	67079.807	7.679	599.498	599.507
CL W. BRG. PIER #1	67083.819	7.583	599.382	599.382
CL. BRG. PIER #1	67085.128	7.551	599.344	599.344
CL E. BRG. PIER #1	67086.437	7.520	599.305	599.305
J	67096.437	7.280	599.022	599.053
K	67106.437	7.040	598.744	598.804
L	67116.437	6.799	598.472	598.556
M	67126.437	6.559	598.208	598.310
N	67136.437	6.319	597.949	598.061
O	67146.437	6.079	597.697	597.811
P	67156.437	5.839	597.451	597.558
Q	67166.437	5.598	597.211	597.304
R	67176.437	5.358	596.978	597.050
S	67186.437	5.118	596.751	596.797
T	67196.437	4.878	596.530	596.546
CL W. BRG. PIER #2	67200.761	4.774	596.436	596.436
CL BRG. PIER #2	67201.521	4.756	596.421	596.421
CL E. BRG. PIER #2	67202.281	4.737	596.404	596.404
U	67212.281	4.497	596.194	596.220
V	67222.281	4.257	595.989	596.042
W	67232.281	4.016	595.792	595.867
X	67242.281	3.776	595.600	595.690
Y	67252.281	3.536	595.414	595.513
Z	67262.281	3.296	595.235	595.336
A1	67272.281	3.056	595.063	595.158
B1	67282.281	2.815	594.896	594.979
C1	67292.281	2.575	594.735	594.799
D1	67302.281	2.335	594.582	594.623
E1	67312.281	2.095	594.434	594.448
CL W. BRG. PIER #3	67316.605	1.991	594.372	594.372
CL BRG. PIER #3	67317.914	1.960	594.353	594.353
CL E. BRG. PIER #3	67319.223	1.929	594.335	594.335
F1	67329.223	1.689	594.199	594.220
G1	67339.223	1.449	594.069	594.109
H1	67349.223	1.208	593.945	594.000
I1	67359.223	0.968	593.826	593.892
J1	67369.223	0.728	593.715	593.786
K1	67379.223	0.488	593.610	593.681
L1	67389.223	0.248	593.511	593.576
M1	67399.223	0.007	593.417	593.470
N1	67409.223	0.233	593.324	593.362
O1	67419.223	0.473	593.237	593.256
CL BRG. E. ABUT.	67427.534	0.673	593.169	593.169
BK. E. ABUT.	67430.738	0.750	593.144	593.144

WESTBOUND BEAM #6

LOCATION	STATION	OFFSET	THEORETICAL GRADE ELEVATIONS	THEORETICAL GRADE ELEVATIONS ADJUSTED FOR DEAD LOAD DEFLECTION
BK. W. ABUT.	66987.846	1.042	602.359	602.359
CL BRG. W. ABUT.	66989.050	0.991	602.263	602.263
A	67001.050	0.831	601.985	602.004
B	67011.050	0.670	601.668	601.704
C	67021.050	0.510	601.370	601.416
D	67031.050	0.350	601.073	601.129
E	67041.050	0.189	600.775	600.832
F	67051.050	0.029	600.478	600.530
G	67061.050	0.131	600.176	600.218
H	67071.050	0.291	599.873	599.900
I	67081.050	0.452	599.574	599.583
CL W. BRG. PIER #1	67084.957	0.514	599.458	599.458
CL. BRG. PIER #1	67086.265	0.535	599.420	599.420
CL E. BRG. PIER #1	67087.572	0.556	599.381	599.381
J	67097.572	0.716	599.093	599.124
K	67107.572	1.877	598.809	598.869
L	67117.572	1.037	598.532	598.616
M	67127.572	1.197	598.261	598.363
N	67137.572	1.358	597.998	598.110
O	67147.572	1.518	597.739	597.853
P	67157.572	1.678	597.488	597.595
Q	67167.572	1.838	597.243	597.336
R	67177.572	1.999	597.004	597.076
S	67187.572	2.159	596.771	596.817
T	67197.572	2.319	596.545	596.561
CL W. BRG. PIER #2	67201.768	2.387	596.452	596.452
CL BRG. PIER #2	67202.527	2.399	596.436	596.436
CL E. BRG. PIER #2	67203.286	2.411	596.418	596.418
U	67213.286	2.571	596.202	596.230
V	67223.286	2.732	595.992	596.045
W	67233.286	2.892	595.789	595.864
X	67243.286	3.052	595.591	595.681
Y	67253.286	3.213	595.400	595.499
Z	67263.286	3.373	595.215	595.316
A1	67273.286	3.533	595.037	595.132
B1	67283.286	3.693	594.865	594.948
C1	67293.286	3.854	594.699	594.763
D1	67303.286	4.014	594.539	594.580
E1	67313.286	4.174	594.387	594.401
CL W. BRG. PIER #3	67317.481	4.242	594.324	594.324
CL BRG. PIER #3	67318.789	4.263	594.305	594.305
CL E. BRG. PIER #3	67320.096	4.284	594.286	594.286
F1	67330.096	4.444	594.144	594.165
G1	67340.096	4.605	594.007	594.047
H1	67350.096	4.765	593.878	593.933
I1	67360.096	4.925	593.754	593.820
J1	67370.096	5.086	593.637	593.708
K1	67380.096	5.246	593.526	593.597
L1	67390.096	5.406	593.422	593.487
M1	67400.096	5.566	593.323	593.376
N1	67410.096	5.727	593.232	593.270
O1	67420.096	5.887	593.145	593.164
CL BRG. E. ABUT.	67428.285	6.018	593.080	593.080
BK. E. ABUT.	67431.490	6.069	593.056	593.056

TOP OF SLAB ELEVATIONS
F.A.I. ROUTE 80 SEC. (50-2)BR
LASALLE COUNTY
STR. NO. 050-0221
STA. 672+09.32
(WESTBOUND STRUCTURE)

FOR INFORMATION ONLY

FAI ROUTE NO.	SEC	COUNTY	TOTAL SHEETS	SHEET NO
80	*	LASALLE	196	151
ILLINOIS PROJECT				

BR. SHEET 25 OF 47
* (50-2)HBR-1, HB-2, BR

WESTBOUND CENTERLINE ROADWAY & P.G.

LOCATION	STATION	OFFSET	THEORETICAL GRADE ELEVATIONS	THEORETICAL GRADE ELEVATIONS ADJUSTED FOR DEAD LOAD DEFLECTION
BK. W. ABUT.	66987.980	0.000	602.370	602.371
CL BRG. W. ABUT.	66991.188	0.000	602.274	602.274
A	67001.188	0.000	601.974	601.993
B	67011.188	0.000	601.674	601.710
C	67021.188	0.000	601.374	601.422
D	67031.188	0.000	601.074	601.130
E	67041.188	0.000	600.774	600.831
F	67051.188	0.000	600.474	600.526
G	67061.188	0.000	600.174	600.216
H	67071.188	0.000	599.874	599.901
I	67081.188	0.000	599.577	599.586
CL W. BRG. PIER #1	67084.886	0.000	599.468	599.469
CL. BRG. PIER #1	67086.188	0.000	599.430	599.431
CL E. BRG. PIER #1	67087.490	0.000	599.392	599.393
J	67097.490	0.000	599.105	599.137
K	67107.490	0.000	598.825	598.885
L	67117.490	0.000	598.550	598.635
M	67127.490	0.000	598.282	598.385
N	67137.490	0.000	598.020	598.133
O	67147.490	0.000	597.765	597.879
P	67157.490	0.000	597.516	597.623
Q	67167.490	0.000	597.273	597.367
R	67177.490	0.000	597.037	597.109
S	67187.490	0.000	596.806	596.853
T	67197.490	0.000	596.583	596.599
CL W. BRG. PIER #2	67201.428	0.000	596.496	596.497
CL BRG. PIER #2	67202.188	0.000	596.480	596.480
CL E. BRG. PIER #2	67202.948	0.000	596.463	596.464
U	67212.948	0.000	596.249	596.278
V	67222.948	0.000	596.041	596.095
W	67232.948	0.000	595.840	595.915
X	67242.948	0.000	595.645	595.735
Y	67252.948	0.000	595.456	595.556
Z	67262.948	0.000	595.274	595.375
A1	67272.948	0.000	595.098	595.193
B1	67282.948	0.000	594.928	595.110
C1	67292.948	0.000	594.764	594.828
D1	67302.948	0.000	594.607	594.649
E1	67312.948	0.000	594.456	594.472
CL W. BRG. PIER #3	67316.886	0.000	594.399	594.399
CL BRG. PIER #3	67318.188	0.000	594.380	594.380
CL E. BRG. PIER #3	67319.490	0.000	594.361	594.362
F1	67329.490	0.000	594.221	594.242
G1	67339.490	0.000	594.087	594.127
H1	67349.490	0.000	593.959	594.014
I1	67359.490	0.000	593.837	593.904
J1	67369.490	0.000	593.722	593.794
K1	67379.490	0.000	593.614	593.685
L1	67389.490	0.000	593.511	593.577
M1	67399.490	0.000	593.415	593.459
N1	67409.490	0.000	593.325	593.364
O1	67419.490	0.000	593.242	593.261
CL BRG. E. ABUT.	67427.438	0.000	593.180	593.180
BK. E. ABUT	67430.646	0.000	593.156	593.157

WESTBOUND BEAM #7

LOCATION	STATION	OFFSET	THEORETICAL GRADE ELEVATIONS	THEORETICAL GRADE ELEVATIONS ADJUSTED FOR DEAD LOAD DEFLECTION
BK. W. ABUT.	66989.090	7.833	602.215	602.215
CL BRG. W. ABUT.	66992.294	7.859	602.118	602.118
A	67002.294	7.939	601.817	601.836
B	67012.294	8.019	601.516	601.552
C	67022.294	8.100	601.214	601.262
D	67032.294	8.180	600.913	600.969
E	67042.294	8.260	600.612	600.669
F	67052.294	8.340	600.311	600.363
G	67062.294	8.421	600.009	600.051
H	67072.294	8.501	599.708	599.735
I	67082.294	8.581	599.411	599.420
CL W. BRG. PIER #1	67086.095	8.612	599.298	599.298
CL. BRG. PIER #1	67087.401	8.622	599.260	599.260
CL E. BRG. PIER #1	67088.707	8.633	599.223	599.223
J	67098.707	8.713	598.935	598.966
K	67108.707	8.793	598.654	598.714
L	67118.707	8.874	598.379	598.463
M	67128.707	8.954	598.110	598.212
N	67138.707	9.034	597.848	597.960
O	67148.707	9.114	597.593	597.707
P	67158.707	9.195	597.342	597.449
Q	67168.707	9.275	597.099	597.192
R	67178.707	9.355	596.863	596.935
S	67188.707	9.435	596.632	596.678
T	67198.707	9.516	596.407	596.423
CL W. BRG. PIER #2	67202.774	9.548	596.318	596.318
CL BRG. PIER #2	67203.532	9.554	596.302	596.302
CL E. BRG. PIER #2	67204.290	9.560	596.286	596.286
U	67214.290	9.640	596.070	596.098
V	67224.290	9.720	595.862	595.915
W	67234.290	9.801	595.661	595.736
X	67244.290	9.881	595.466	595.556
Y	67254.290	9.961	595.276	595.375
Z	67264.290	10.041	595.093	595.194
A1	67274.290	10.122	594.917	595.012
B1	67284.290	10.202	594.747	594.830
C1	67294.290	10.282	594.582	594.646
D1	67304.290	10.362	594.425	594.466
E1	67314.290	10.443	594.274	594.288
CL W. BRG. PIER #3	67318.357	10.475	594.214	594.214
CL BRG. PIER #3	67319.663	10.485	594.195	594.195
CL E. BRG. PIER #3	67320.969	10.496	594.176	594.176
F1	67330.969	10.576	594.036	594.057
G1	67340.969	10.656	593.901	593.941
H1	67350.969	10.737	593.773	593.828
I1	67360.969	10.817	593.652	593.718
J1	67370.969	10.897	593.536	593.607
K1	67380.969	10.977	593.427	593.498
L1	67390.969	11.058	593.324	593.389
M1	67400.969	11.138	593.228	593.281
N1	67410.969	11.218	593.138	593.176
O1	67420.969	11.298	593.054	593.073
CL BRG. E. ABUT.	67429.036	11.363	592.991	592.991
BK. E. ABUT.	67432.241	11.389	592.967	592.967

WESTBOUND BEAM #8

LOCATION	STATION	OFFSET	THEORETICAL GRADE ELEVATIONS	THEORETICAL GRADE ELEVATIONS ADJUSTED FOR DEAD LOAD DEFLECTION
BK. W. ABUT.	66990.333			602.014
CL BRG. W. ABUT.	66993.538	16.708	601.918	601.918
A	67003.538	16.708	601.618	601.637
B	67013.538	16.708	601.318	601.354
C	67023.538	16.708	601.018	601.066
D	67033.538	16.708	600.718	600.774
E	67043.538	16.708	600.647	600.704
F	67053.538	16.708	600.352	600.404
G	67063.538	16.708	599.818	599.860
H	67073.538	16.708	599.518	599.545
I	67083.538	16.708	599.222	599.231
CL W. BRG. PIER #1	67087.233	16.708	599.114	599.114
CL. BRG. PIER #1	67088.538	16.708	599.077	599.077
CL E. BRG. PIER #1	67089.842	16.708	599.039	599.039
J	67099.842	16.708	598.753	598.784
K	67109.842	16.708	598.474	598.534
L	67119.842	16.708	598.201	598.285
M	67129.842	16.708	597.934	598.036
N	67139.842	16.708	597.674	597.786
O	67149.842	16.708	597.420	597.534
P	67159.842	16.708	597.173	597.280
Q	67169.842	16.708	596.931	597.024
R	67179.842	16.708	596.696	596.768
S	67189.842	16.708	596.468	596.514
T	67199.842	16.708	596.245	596.261
CL W. BRG. PIER #2	67203.780	16.708	596.160	596.160
CL BRG. PIER #2	67204.538	16.708	596.143	596.143
CL E. BRG. PIER #2	67205.295	16.708	596.127	596.127
U	67215.295	16.708	595.914	595.940
V	67225.295	16.708	595.708	595.761
W	67235.295	16.708	595.508	595.583
X	67245.295	16.708	595.314	595.404
Y	67255.295	16.708	595.127	595.226
Z	67265.295	16.708	594.946	595.047
A1	67275.295	16.708	594.772	594.867
B1	67285.295	16.708	594.603	594.686
C1	67295.295	16.708	594.441	594.505
D1	67305.295	16.708	594.286	594.327
E1	67315.295	16.708	594.136	594.150
CL W. BRG. PIER #3	67319.233	16.708	594.079	594.079
CL BRG. PIER #3	67320.538	16.708	594.061	594.061
CL E. BRG. PIER #3	67321.842	16.708	594.042	594.042
F1	67331.842	16.708	593.903	593.924
G1	67341.842	16.708	593.770	593.810
H1	67351.842	16.708	593.644	593.699
I1	67361.842	16.708	593.524	593.590
J1	67371.842	16.708	593.411	593.482
K1	67381.842	16.708	593.303	593.374
L1	67391.842	16.708	593.203	593.268
M1	67401.842	16.708	593.108	593.161
N1	67411.842	16.708	593.020	593.058
O1	67421.842	16.708	592.930	592.957
CL BRG. E. ABUT.	67429.788	16.708	592.877	592.877
BK. E. ABUT.	67432.992		592.854	592.854

TOP OF SLAB ELEVATIONS
F.A.I. ROUTE 80 SEC. (50-2)BR
LASALLE COUNTY
STR. NO. 050-0221
STA. 672+09.32
(WESTBOUND STRUCTURE)

FOR INFORMATION ONLY

MODEL: Default
FILE NAME: \\QuiggProjects\2018\18L018 Various Structure IDOT D3 Farnsworth PTB 161-21\Work Order 14 - I-80 Roadway and other\CADD\CADD Sheets\Existing Bridge Plans\D366012-sht-Existing Bridge Plans 0228-0229-071.dgn

QUIGG ENGINEERING INC

USER NAME = mwilson	DESIGNED -	REVISED -
	DRAWN -	REVISED -
PLOT SCALE = 2.0000 ' / in.	CHECKED -	REVISED -
PLOT DATE = 10/2/2019	DATE - 10/4/2019	REVISED -

STATE OF ILLINOIS
DEPARTMENT OF TRANSPORTATION

EXISTING STRUCTURAL PLANS
STRUCTURE NO. 050-0220/0221

SCALE: | SHEET 27 OF 42 SHEETS | STA. | TO STA.

F.A.I RTE.	SECTION	COUNTY	TOTAL SHEETS	SHEET NO.
80	50-2(HB-2)BDR(HB-1)BR(BR)BR-1	LASALLE	328	276
		CONTRACT NO. 66H21		
	ILLINOIS	FED. AID PROJECT		

F.A.I. ROUTE NO.	SEC.	COUNTY	TOTAL SHEETS	SHEET NO.
80	*	LASALLE	196	152

ILLINOIS PROJECT

BR. SHEET 26 OF 47

* (50-2)HBR-I, HB-2, BR

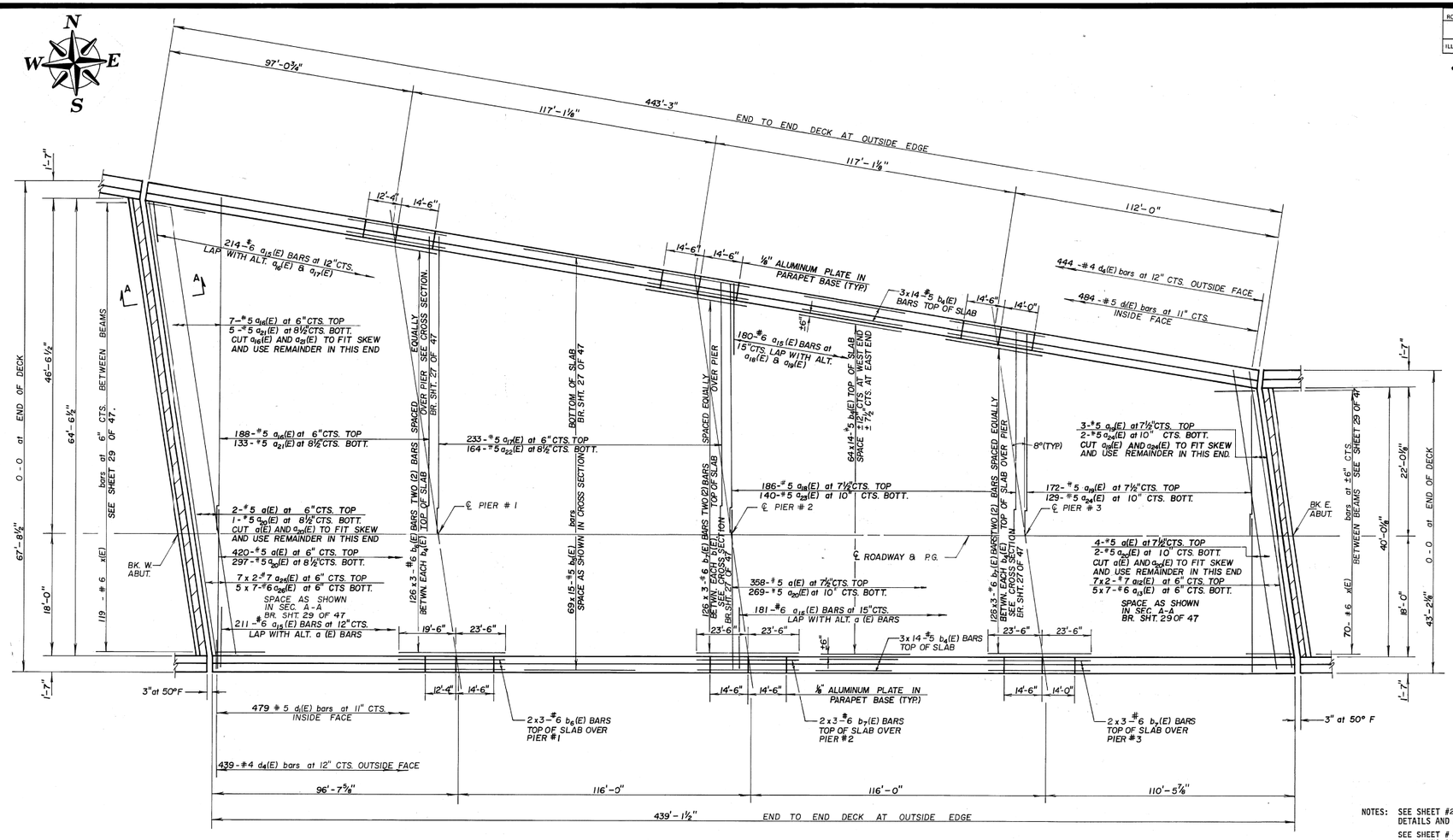

PLAN

NOTES:

SEE SHEET #27 & #28 OF 47 FOR SUPERSTRUCTURE DETAILS AND BILL OF MATERIAL.

SEE SHEET # 29 OF 47 FOR SECTIONS AT ABUTMENTS AND PIERS.

SEE SHEET #1 OF 47 FOR DRAINAGE SCRUPPER SPACING.

SEE SHEETS 28,42,& 43 OF 47 FOR DRAINAGE SCRUPPER DETAILS.

REINFORCEMENT BARS DESIGNATED (E) SHALL BE EPOXY COATED.

BARS INDICATED THUS 20 x 3 - #5 ETC. INDICATES 20 LINES OF BARS WITH 3 LENGTHS PER LINE.

CUT LONGITUDINAL REINFORCEMENT BARS TO CLEAR DRAINAGE SCUPPERS.

BAR LAPS

#5 BAR = 2'-2"
#6 BAR = 2'-7"
#7 BAR = 3'-5"

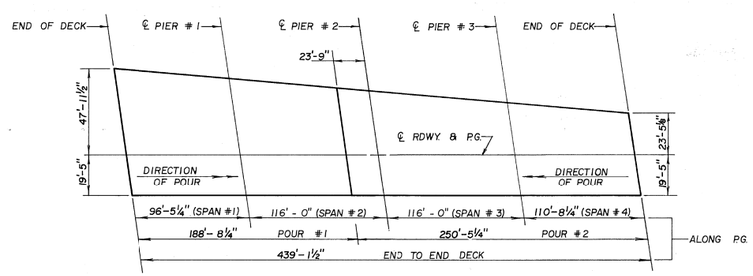

POURING SEQUENCE DETAIL

NOTES: WHEN THE DECK POUR IS STOPPED FOR THE DAY AT THE TRANSVERSE BONDED CONSTRUCTION JOINT IN THE DECK POURING SEQUENCE AS SHOWN, THE NEXT POUR SHALL NOT BE MADE UNTIL BOTH OF THE FOLLOWING REQUIREMENTS ARE MET:

1. AT LEAST 72 HOURS SHALL HAVE ELAPSED FROM THE END OF THE PREVIOUS POUR.
2. THE CONCRETE STRENGTH SHALL HAVE ATTAINED A MINIMUM MODULUS OF RUPTURE OF 650 P.S.I. OR A MINIMUM COMPRESSIVE STRENGTH OF 3500 P.S.I.

THE CONTRACTOR, AS AN ALTERNATIVE TO THE POURING SEQUENCE MAY POUR THE DECK SIMULTANEOUSLY FROM EACH END OF THE BRIDGE.

SUPERSTRUCTURE
FAI ROUTE 80 SEC(50-2)BR
LA SALLE COUNTY
STRUCTURE NO. 050-0221
STA. 672+09.32

(WESTBOUND STRUCTURE)

FOR INFORMATION ONLY

QUIGG ENGINEERING INC

USER NAME = mwilson	DESIGNED -	REVISED -
	DRAWN -	REVISED -
PLOT SCALE = 2.0000 ' / in.	CHECKED -	REVISED -
PLOT DATE = 10/2/2019	DATE - 10/4/2019	REVISED -

STATE OF ILLINOIS
DEPARTMENT OF TRANSPORTATION

EXISTING STRUCTURAL PLANS
STRUCTURE NO. 050-0220/0221

SCALE: | SHEET 28 OF 42 SHEETS | STA. | TO STA.

F.A.I RTE.	SECTION	COUNTY	TOTAL SHEETS	SHEET NO.
80	50-2(HB-2)BDR(HB-1)BR(BR)BR-1	LASALLE	328	277
		CONTRACT NO. 66H21		
	ILLINOIS	FED. AID PROJECT		

MODEL: Default
FILE NAME: \\QuiggProjects\2018\18L018 Various Structure IDOT D3 Farnsworth PTB 161-21\Work Order 14 - I-80 Roadway and other\CADD\CADD Sheets\Existing Bridge Plans\D366H21-cht-Existing Bridge Plans 0228-0229-072.dgn

F.A.I. ROUTE NO.	SEC.	COUNTY	TOTAL SHEETS	SHEET NO.
80	*	LASALLE	196	153

ILLINOIS PROJECT

BR. SHEET 27 OF 47
* (50-2)HBR-1, HB-2, BR

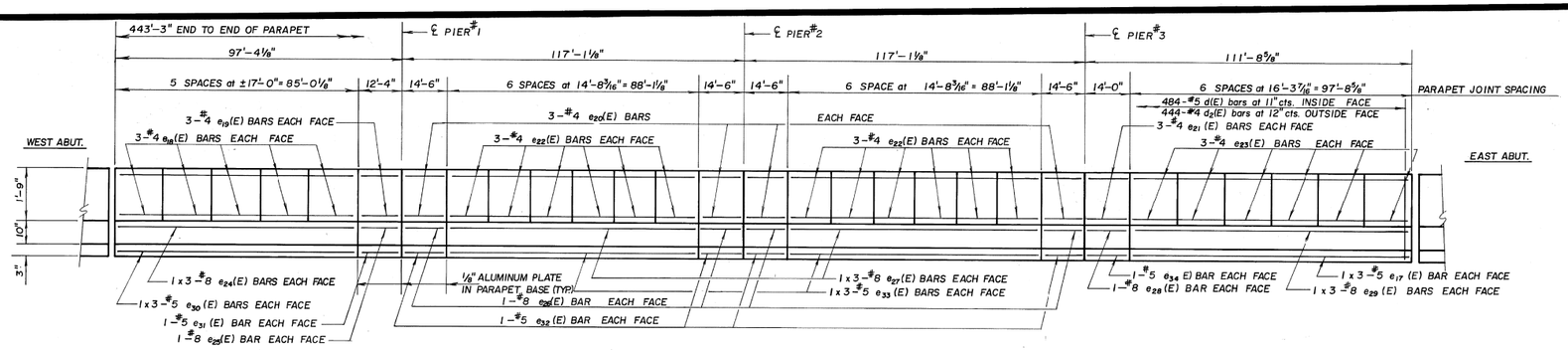

INSIDE ELEVATION OF NORTH PARAPET

(LOOKING NORTH)

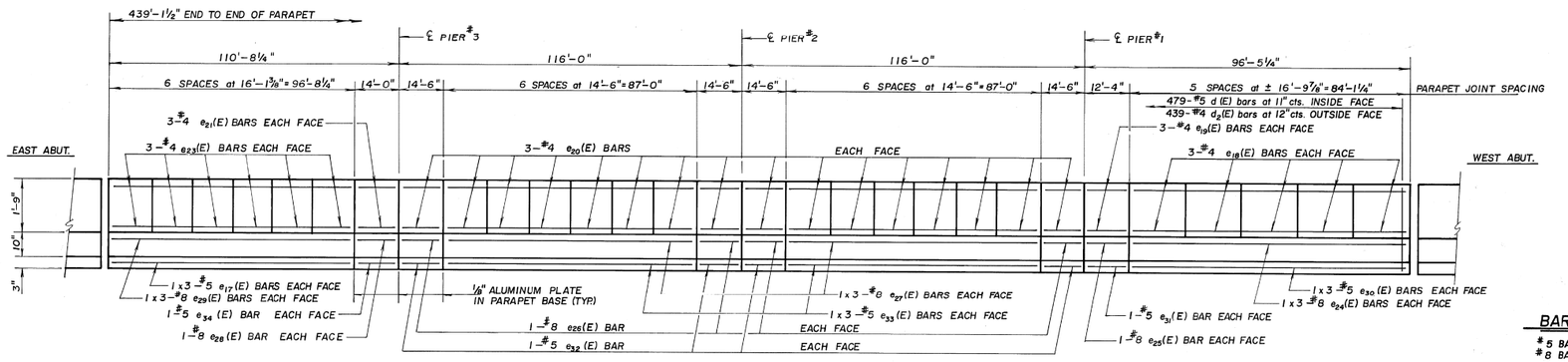

INSIDE ELEVATION OF SOUTH PARAPET

(LOOKING SOUTH)

BAR LAPS

#5 BAR = 2'-2"
#8 BAR = 4'-6"

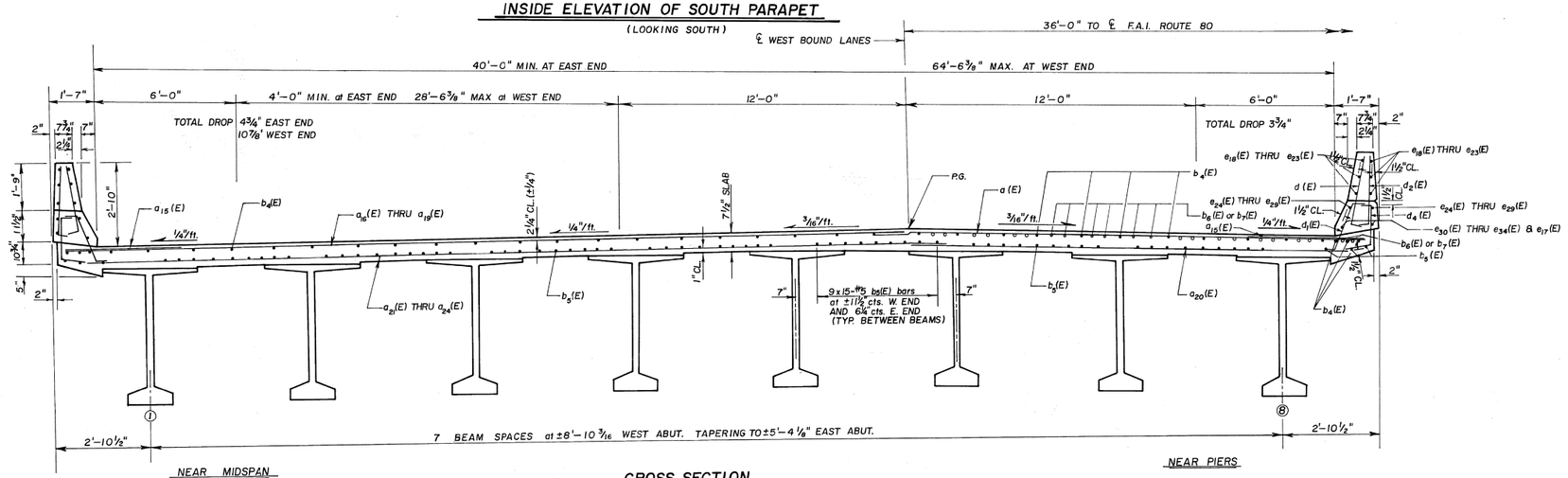

CROSS SECTION

(LOOKING EAST)

SUPERSTRUCTURE BILL OF MATERIAL

BAR	NO.	SIZE	LENGTH	SHAPE
a (E)	784	#5	20'-6"	
a12(E)	14	#7	23'-4"	
a13(E)	35	#6	4'-2"	
a14(E)	128	#5	2'-0"	
a15(E)	786	#6	4'-0"	
a16(E)	195	#5	49'-2"	
a17(E)	233	#5	43'-8"	
a18(E)	186	#5	37'-3"	
a19(E)	175	#5	30'-8"	
a20(E)	569	#5	18'-6"	
a21(E)	138	#5	51'-2"	
a22(E)	164	#5	45'-8"	
a23(E)	140	#5	39'-3"	
a24(E)	131	#5	32'-8"	
a25(E)	14	#7	35'-9"	
a26(E)	35	#6	7'-8"	
b4(E)	980	#5	33'-8"	
b5(E)	1035	#5	31'-6"	
b6(E)	390	#6	16'-0"	
b7(E)	780	#6	17'-4"	
d(E)	963	#5	3'-0"	L
d1(E)	963	#5	2'-7"	
d2(E)	883	#4	3'-0"	L
d4(E)	883	#4	2'-10"	
e17(E)	12	#5	33'-11"	
e18(E)	60	#4	16'-8"	
e19(E)	12	#4	12'-1"	
e20(E)	120	#4	14'-3"	
e21(E)	12	#4	13'-9"	
e22(E)	72	#4	14'-5"	
e23(E)	72	#4	15'-11"	
e24(E)	12	#8	31'-3"	
e25(E)	4	#8	12'-1"	
e26(E)	16	#8	14'-3"	
e27(E)	24	#8	32'-3"	
e28(E)	4	#8	13'-9"	
e29(E)	12	#8	35'-6"	
e30(E)	12	#5	29'-8"	
e31(E)	4	#5	12'-1"	
e32(E)	16	#5	14'-3"	
e33(E)	24	#5	30'-10"	
e34(E)	4	#5	13'-9"	
m2(E)	18	#8	6'-2"	
m6(E)	14	#6	4'-10"	
m7(E)	6	#8	4'-2"	
m8(E)	56	#4	7'-4"	
m9(E)	56	#4	5'-6"	
m10(E)	14	#6	5'-9"	
m11(E)	14	#6	3'-10"	
m12(E)	56	#4	6'-4"	
s7(E)	70	#4	15'-2"	
s8(E)	35	#4	15'-9"	
x(E)	189	#6	7'-5"	
CONCRETE SUPERSTRUCTURES		CU. YD.	900.4	
REINFORCEMENT BARS (EPOXY COATED)		LBS.	216040	

REINFORCEMENT BARS DESIGNATED (E) SHALL BE EPOXY COATED.

BARS INDICATED THUS 20x3-#5 ETC. INDICATES 20 LINES OF BARS WITH 3 LENGTHS PER LINE.

SUPERSTRUCTURE DETAILS
FAI ROUTE 80 SEC (50-2) BR
LA SALLE COUNTY
STRUCTURE NO. 050-0221
STA. 672+09.32

(WESTBOUND STRUCTURE)

FOR INFORMATION ONLY

MODEL: Default
FILE NAME: \\QuiggProjects\2018\18L018 Various Structure IDOT D3 Farnsworth PTB 161-21\Work Order 14 - I-80 Roadway and other\CADD\CADD Sheets\Existing Bridge Plans\0366V21-sht-Existing Bridge Plans 0228-0229 073.dgn

QUIGG ENGINEERING INC

USER NAME = mwilson	DESIGNED -	REVISED -	
	DRAWN -	REVISED -	
PLOT SCALE = 2.0000 ' / in.	CHECKED -	REVISED -	
PLOT DATE = 10/2/2019	DATE - 10/4/2019	REVISED -	

STATE OF ILLINOIS
DEPARTMENT OF TRANSPORTATION

EXISTING STRUCTURAL PLANS
STRUCTURE NO. 050-0220/0221

SCALE: | SHEET 29 OF 42 SHEETS | STA. | TO STA.

F.A.I RTE.	SECTION	COUNTY	TOTAL SHEETS	SHEET NO.
80	50-2(HB-2)BDR(HB-1)BR(BR)BR-1	LASALLE	328	278
		CONTRACT NO. 66H21		
	ILLINOIS	FED. AID PROJECT		

F.A.I. ROUTE NO.	SEC.	COUNTY	TOTAL SHEETS	SHEET NO.
80	*	LASALLE	196	154

ILLINOIS PROJECT

BR. SHEET 28 OF 47
* (50-2)HBR-I, HB-2, BR

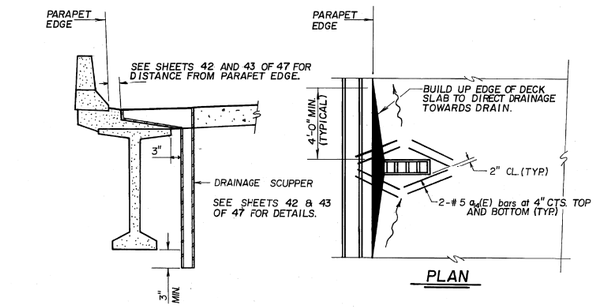

PLAN

SECTION AT DRAINAGE SCUPPER

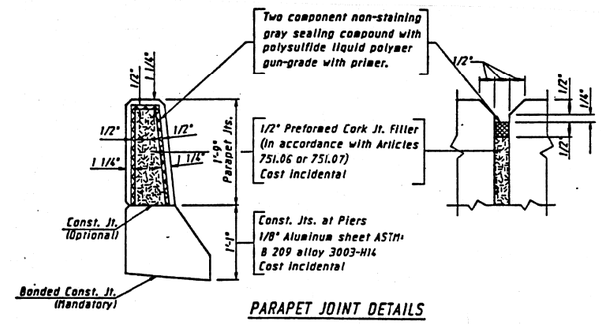

PARAPET JOINT DETAILS

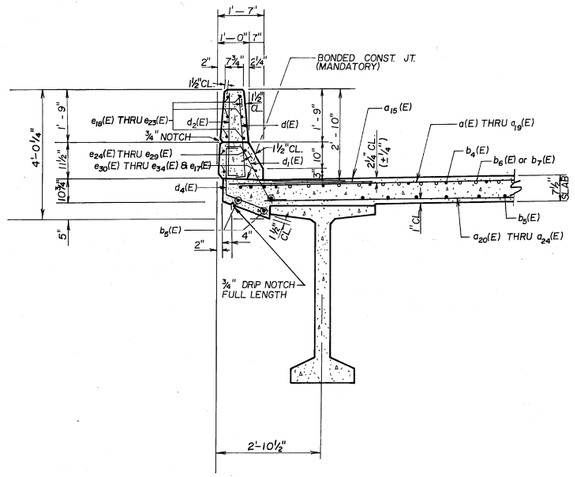

SECTION THRU PARAPET

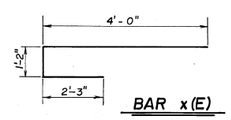

BAR x(E)

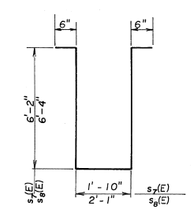

BAR s_7(E) & s_8(E)

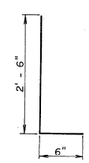

BARS d(E) & d_2(E)

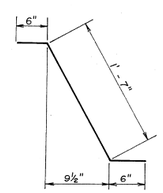

BAR d_1(E)

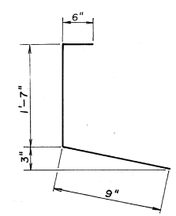

BAR d_4(E)

SUPERSTRUCTURE DETAILS
FAI ROUTE 80 SEC(50-2) BR
LA SALLE COUNTY
STRUCTURE NO. 050-0221
STA. 672+09.32

(WESTBOUND STRUCTURE)

FOR INFORMATION ONLY

MODEL: Default
FILE NAME: \QuiggProjects\2018\18L018 Various Structure IDOT D3 Farnsworth PTB 161-2\Work Order 14 - I-80 Roadway and other\CADD\CADD Sheets\Existing Bridge Plans\0366H21-sht-Existing Bridge Plans 0228-0229-074.dgn

QUIGG ENGINEERING INC

USER NAME = mwilson	DESIGNED -	REVISED -	
	DRAWN -	REVISED -	
PLOT SCALE = 2.0000 ' / in.	CHECKED -	REVISED -	
PLOT DATE = 10/2/2019	DATE - 10/4/2019	REVISED -	

STATE OF ILLINOIS
DEPARTMENT OF TRANSPORTATION

EXISTING STRUCTURAL PLANS
STRUCTURE NO. 050-0220/0221

SCALE: | SHEET 30 OF 42 SHEETS | STA. | TO STA.

F.A.I RTE.	SECTION	COUNTY	TOTAL SHEETS	SHEET NO.
80	50-2(HB-2)BDR(HB-1)BR(BR)BR-1	LASALLE	328	279

CONTRACT NO. 66H21

ILLINOIS | FED. AID PROJECT

F.A.I. ROUTE NO.	SEC	COUNTY	TOTAL SHEETS	SHEET NO.
80	*	LASALLE	196	155

ILLINOIS PROJECT

BR. SHEET 29 OF 47

* (50-2)HBR-1, HB-2, BR

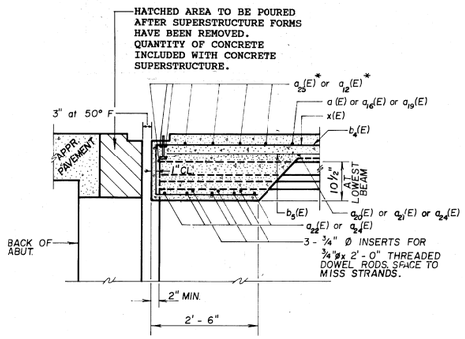

SEC A-A

(AT RIGHT ANGLE TO ℄ ABUTMENT)

*PLACE $a_{21}(E)$ OR $a_{23}(E)$ BARS IN BACK OF ANCHOR BOLT AS SHOWN IF REQUIRED TO MAINTAIN 1" CL. (+0 - ⅛"). ANCHOR BOLTS SHOULD BE TIED TO $a_{25}(E)$ & $a_{12}(E)$ BARS.

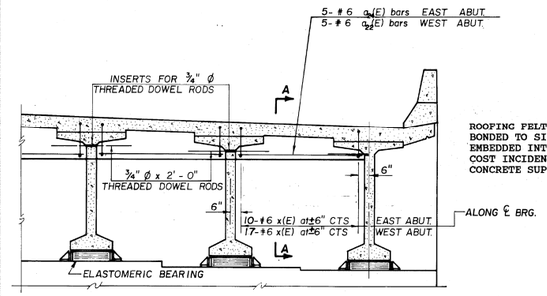

DIAPHRAGM AT ABUTMENTS

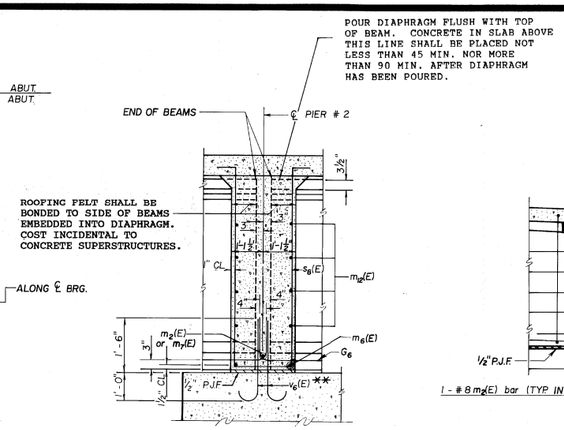

SEC C-C

(AT RIGHT ANGLE TO ℄ PIER #2)

SEE DETAIL "A" ON SHEET 32 OF 47.

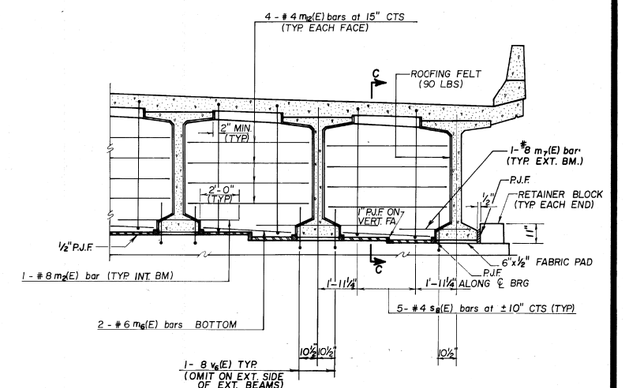

DIAPHRAGM AT PIER # 2

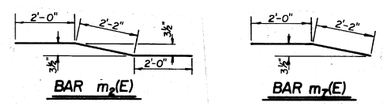

BAR $m_2(E)$

BAR $m_7(E)$

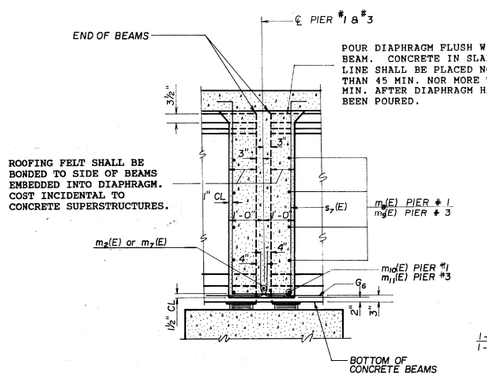

SEC B-B

(AT RIGHT ANGLE TO ℄ PIER #1 & #3)

SEE DETAIL "A" ON SHEETS 31, 32, AND 33 OF 47.

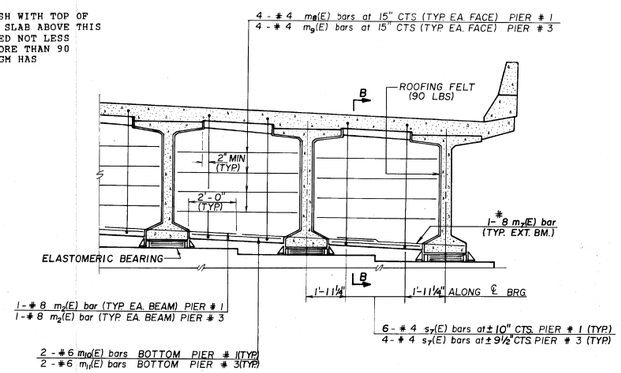

DIAPHRAGM AT PIERS # 1 & # 3

FORM BOTTOM OF DIAPHRAGMS TO CLEAR SIDE RETAINERS.

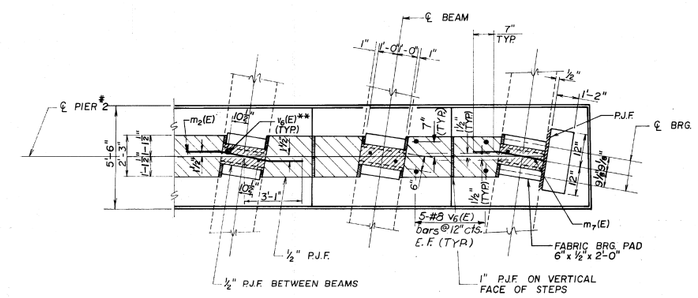

PARTIAL PLAN AT PIER # 2

NOTES: REINFORCEMENT BARS SHOWN ON THIS SHEET ARE INCLUDED IN BILL OF MATERIAL ON SHEET 27 OF 47.

CONCRETE IN DIAPHRAGMS IS INCLUDED WITH "CONCRETE SUPERSTRUCTURES" ON SHEET 27 OF 47.

FOR NEOPRENE EXPANSION JOINT DETAILS SEE SHEET 41 OF 47.

FOR DETAILS OF s (E), s (E), & x(E) BARS SEE SHEET 28 OF 47.

** BARS INCLUDED WITH BILL OF MATERIAL FOR PIER #2. SEE SHEET 38 OF 47.

DIAPHRAGM DETAILS
FAI ROUTE 80 SEC(50-2) BR
LA SALLE COUNTY
STRUCTURE NO. 050-0221
STA. 672+09.32

(WESTBOUND STRUCTURE)

FOR INFORMATION ONLY

MODEL: Default
FILE NAME: \\QuigigProjects\2018\18L018 Various Structure IDOT D3 Farnsworth PTB 161-2 I-80 Roadway and other\CADD\CADD Sheets\Existing Bridge Plans\D36H21-01-Existing Bridge Plans 0228-0229 075.dgn

QUIGG ENGINEERING INC

USER NAME = mwilson	DESIGNED -	REVISED -	
	DRAWN -	REVISED -	
PLOT SCALE = 2.0000 ' / in.	CHECKED -	REVISED -	
PLOT DATE = 10/2/2019	DATE - 10/4/2019	REVISED -	

STATE OF ILLINOIS
DEPARTMENT OF TRANSPORTATION

EXISTING STRUCTURAL PLANS
STRUCTURE NO. 050-0220/0221

SCALE: | SHEET 31 OF 42 SHEETS | STA. | TO STA.

F.A.I RTE.	SECTION	COUNTY	TOTAL SHEETS	SHEET NO.
80	50-2(HB-2)BDR(HB-1)BR(BR)BR-1	LASALLE	328	280
		CONTRACT NO. 66H21		
	ILLINOIS	FED. AID PROJECT		

F.A.I. ROUTE NO.	SEC	COUNTY	TOTAL SHEETS	SHEET NO.
80	*	LASALLE	196	156

ILLINOIS PROJECT

BR. SHEET 30 OF 47
• (50-2)HBR-I, HB-2, BR

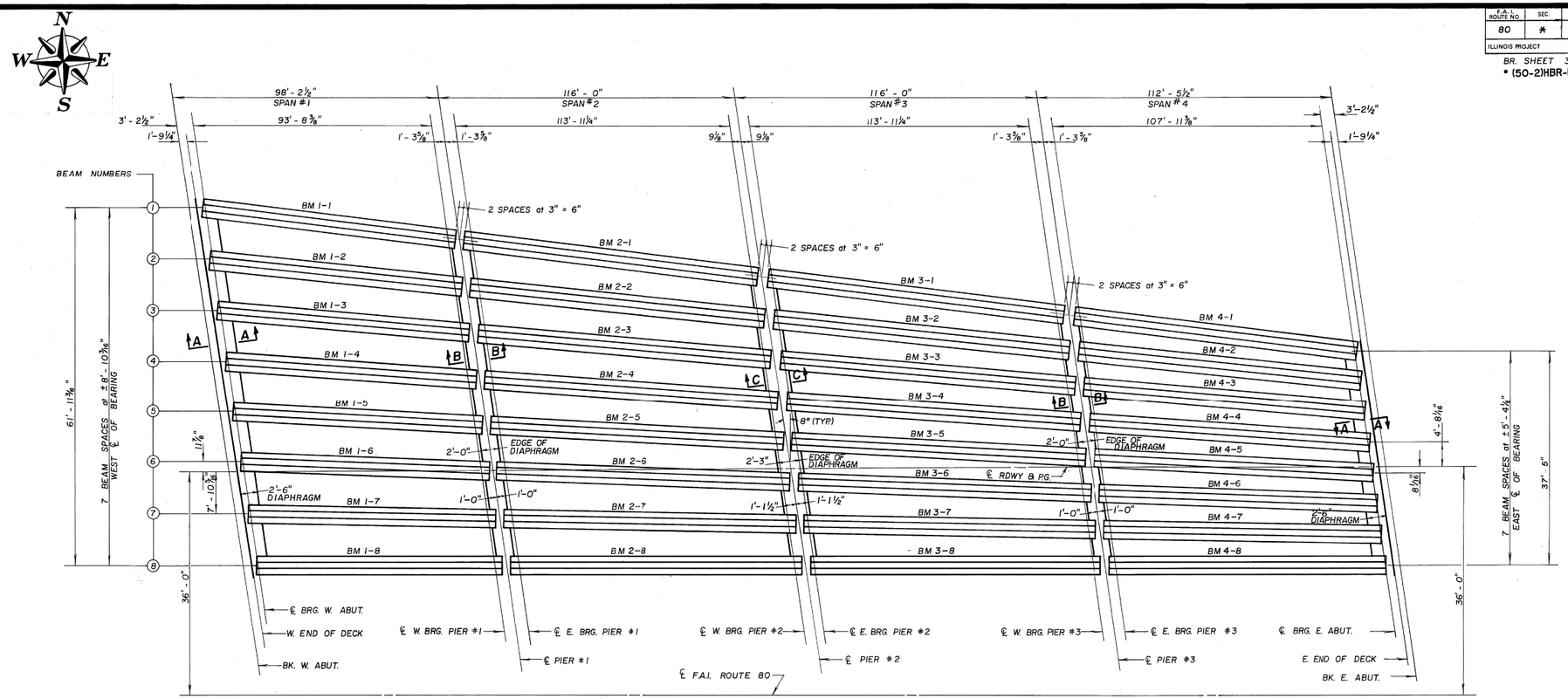

FRAMING PLAN

NOTE: BM 1-5 DENOTES SPAN #1 - BEAM #5.

SEE SHEETS 31, 32, & 33 OF 47 FOR BEAM LENGTHS.

FOR SECTIONS A-A, B-B, AND C-C SEE SHEET 29 OF 47.

FRAMING PLAN
FAI ROUTE 80 SEC (50-2) BR
LA SALLE COUNTY
STRUCTURE NO. 050-0221
STA. 672+09.32

(WESTBOUND STRUCTURE)

FOR INFORMATION ONLY

MODEL: Default
FILE NAME: \\QuiggProjects\2018\18L018 Various Structure IDOT D3 Farnsworth PTB 161-21\Work Order 14 - I-80 Roadway and other\CADD\CADD Sheets\Existing Bridge Plans\0366121-sht-Existing Bridge Plans 0228-0229-076.dgn

QUIGG ENGINEERING INC

USER NAME = mwilson	DESIGNED -	REVISED -	
	DRAWN -	REVISED -	
PLOT SCALE = 2.0000 ' / in.	CHECKED -	REVISED -	
PLOT DATE = 10/2/2019	DATE - 10/4/2019	REVISED -	

STATE OF ILLINOIS
DEPARTMENT OF TRANSPORTATION

EXISTING STRUCTURAL PLANS
STRUCTURE NO. 050-0220/0221

SCALE: | SHEET 32 OF 42 SHEETS | STA. | TO STA.

F.A.I RTE.	SECTION	COUNTY	TOTAL SHEETS	SHEET NO.
80	50-2(HB-2)BDR(HB-1)BR(BR)BR-1	LASALLE	328	281
		CONTRACT NO. 66H21		
	ILLINOIS	FED. AID PROJECT		

ROUTE NO.	SECTION	COUNTY	TOTAL SHEETS	SHEET NO.
F.A.I. 80	*	LASALLE	196	157

BR. SHEET NO. 31

SHEETS 47

* (50-2)HBR-1, HB-2, BR

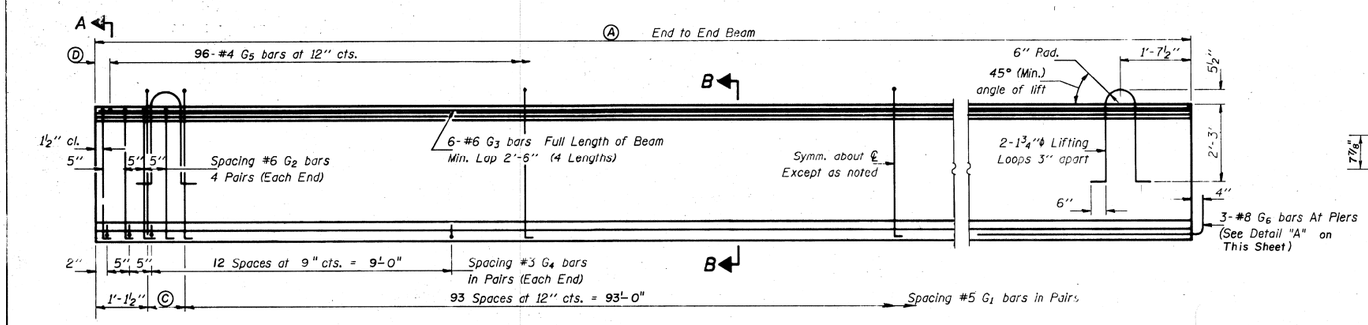

ELEVATION OF BEAM
(Showing Reinforcement & Dimensions)

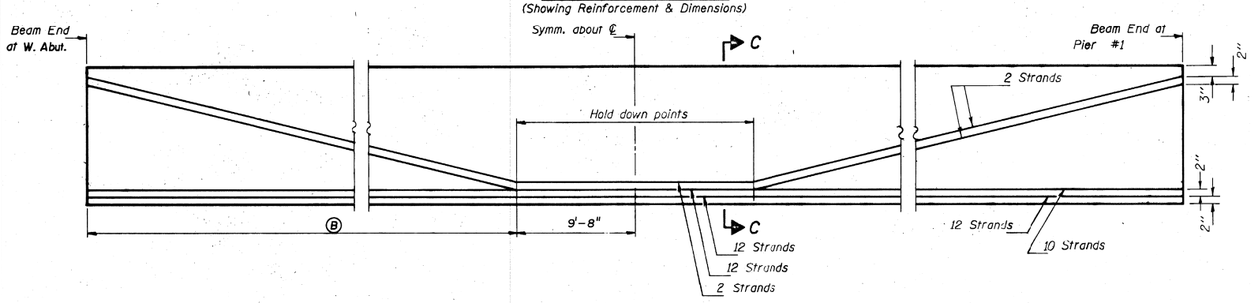

ELEVATION OF BEAM
(Showing Prestressing Steel)

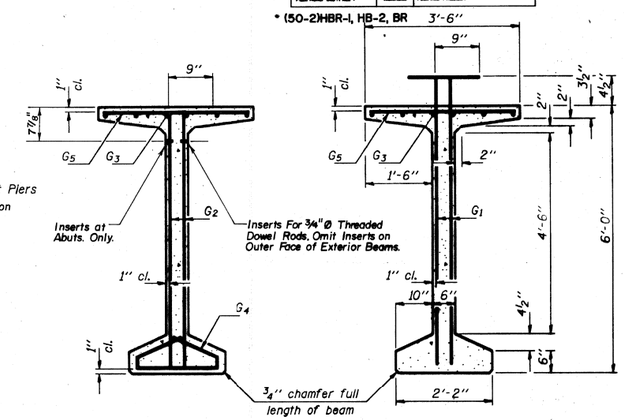

SECTION A-A

SECTION B-B

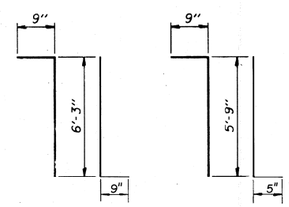

BAR G_1

BAR G_2

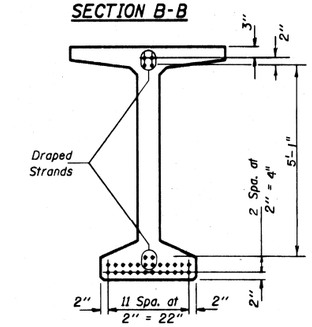

SECTION C-C

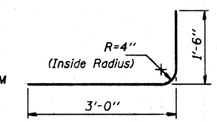

BAR G_6

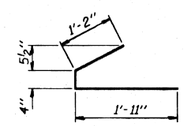

BAR G_4

*** BAR LIST

Bar	No.	Size	Length	Shape
G_1	192	#5	7'-9"	
G_2	16	#6	6'-11"	
G_3	24	#6	26'-0"	
G_4	60	#3	3'-5"	
G_5	96	#4	3'-3"	
G_6	3	#8	4'-6"	

*** For one beam only.

BILL OF MATERIAL

Item	Unit	Total
Furnishing and Erecting Precast Prestressed Concrete Bulb T-Beams, 72"	FOOT	769

NOTES

All inserts, threaded dowel rods for inserts, reinforcing and Prestressing Steel, and other items which are cast into the Precast Concrete Bulb T-Beams shall be included in the contract unit price per lineal foot of "Furnishing and Erecting Precast Prestressed Concrete Bulb T-Beams, 72."

Inserts for ¾"ϕ threaded dowel rods are to be double strut, coil type for interior T-Beams and single coil, flared loop type for exterior T-Beams.

Prestressing steel shall be non-galvanized high strength, low relaxation 7-wire strand, Grade 270.

The nominal diameter shall be ½" and the nominal cross-sectional area shall be 0.153 sq. in.

Non-prestressing steel shall conform to AASHTO designation M-31, M-42 or M-53 Grade 60.

Steel for lifting loops shall be non-deformed bars fy = 40,000 psi.

Required release strength, f'ci, shall be 5000 psi.

* See Framing Plan For Beam Locations

BEAM NO.*	Ⓐ	Ⓑ	Ⓒ	Ⓓ
1-1	96'-7"	38'-7 1/2"	8"	9 1/2"
1-2	96'-5 1/4"	38'-6 5/8"	7 1/8"	8 5/8"
1-3	96'-3 1/2"	38'-5 3/4"	6 1/4"	7 3/4"
1-4	96'-2"	38'-5"	5 1/2"	7"
1-5	96'-0 1/2"	38'-4 1/4"	4 3/4"	6 1/4"
1-6	95'-11"	38'-3 1/2"	4"	5 1/2"
1-7	95'-9 1/2"	38'-2 3/4"	3 1/4"	4 3/4"
1-8	95'-8 1/4"	38'-2 1/8"	2 5/8"	4 1/8"

NOTE: Beam No. 1-5 Denotes Span 1 Beam 5

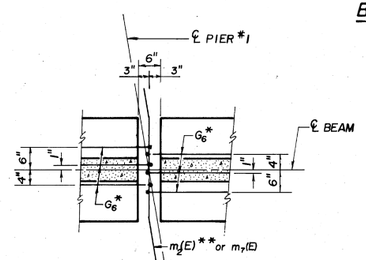

*TILT HOOK OF EXTERIOR BARS OF EXTERIOR BEAMS INWARD TO FIT WITHIN LIMITS OF CAST IN PLACE DIAPHRAGM.

**TIE m_2(E) AND m_7(E) BARS TO G_6 BARS WITH #9 WIRE TO PREVENT ANY MOVEMENT BETWEEN BARS.

DETAIL "A"

SEE SECTION B-B ON SHEET 29 OF 47 FOR ELEVATION VIEW OF DETAIL "A".

BEAM DETAILS - SPAN # 1
F.A.I. RT. 80 SEC. (50-2)BR
LASALLE COUNTY
STRUCTURE NO. 050-0221
STA. 672 + 09.32

(WESTBOUND STRUCTURE)

FOR INFORMATION ONLY

MODEL: Default
FILE NAME: \\Quigg\Projects\2018\18IL018 Various Structure IDOT D3 Farnsworth PTB 161-21\Work Order 14 - I-80 Roadway and other\CADD\CADD Sheets\Existing Bridge Plans 0228-0229 077.dgn

QUIGG ENGINEERING INC

USER NAME = mwilson	DESIGNED -	REVISED -	
	DRAWN -	REVISED -	
PLOT SCALE = 2.0000 ' / in.	CHECKED -	REVISED -	
PLOT DATE = 10/2/2019	DATE - 10/4/2019	REVISED -	

STATE OF ILLINOIS
DEPARTMENT OF TRANSPORTATION

EXISTING STRUCTURAL PLANS
STRUCTURE NO. 050-0220/0221

SCALE: | SHEET 33 OF 42 SHEETS | STA. | TO STA.

F.A.I RTE.	SECTION	COUNTY	TOTAL SHEETS	SHEET NO.
80	50-2(HB-2)BDR(HB-1)BR(BR)BR-1	LASALLE	328	282

CONTRACT NO. 66H21

ILLINOIS | FED. AID PROJECT

ROUTE NO.	SECTION	COUNTY	TOTAL SHEETS	SHEET NO.
F.A.I. 80	*	LASALLE	196	158
FED. ROAD DIST. NO. 7	ILLINOIS	FED. AID PROJECT-		

BR.
SHEET NO. 32
SHEETS 47

* (50-2)HBR-1, HB-2, BR

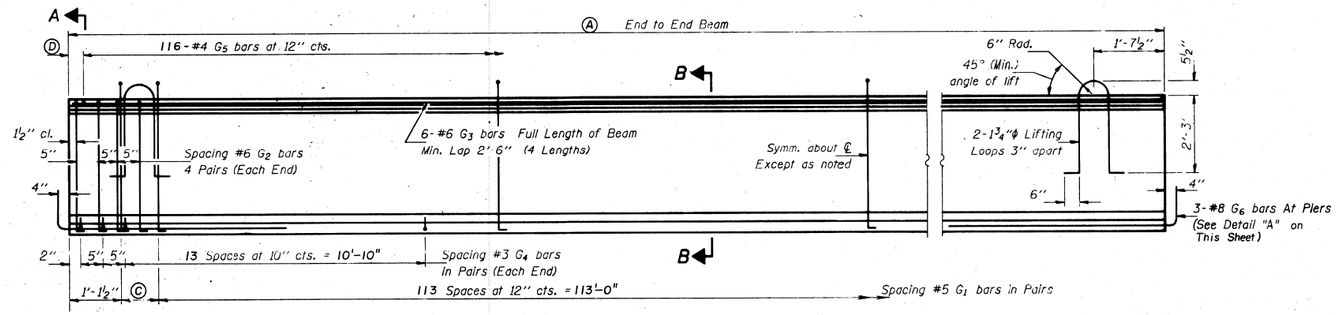

ELEVATION OF BEAM
(Showing Reinforcement & Dimensions)

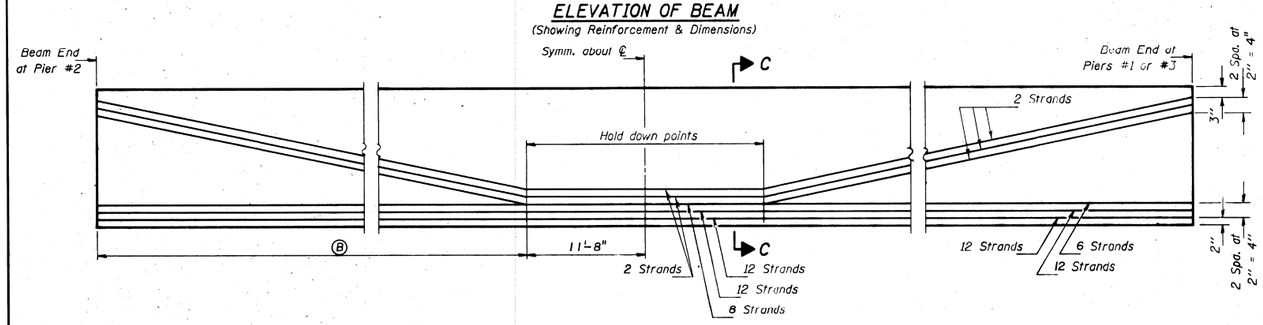

ELEVATION OF BEAM
(Showing Prestressing Steel)

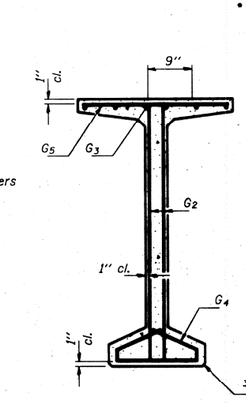

SECTION A-A

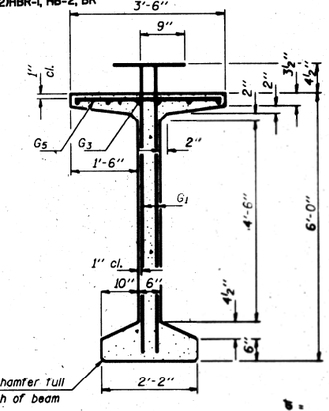

SECTION B-B

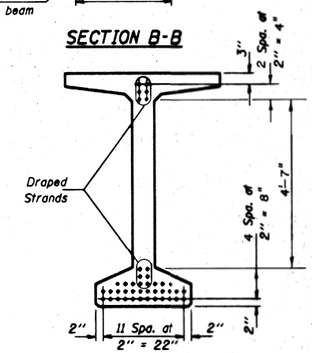

SECTION C-C

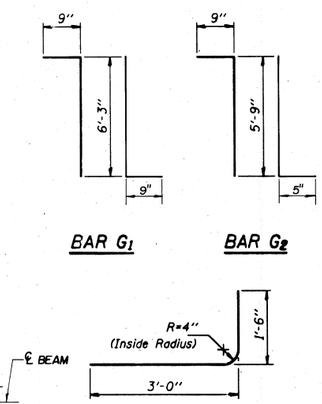

BAR G_1 BAR G_2 BAR G_6

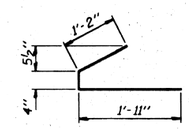

BAR G_4

NOTES

All inserts, threaded dowel rods for inserts, reinforcing and Prestressing Steel, and other items which are cast into the Precast Concrete Bulb T-Beams shall be included in the contract unit price per lineal foot of "Furnishing and Erecting Precast Prestressed Concrete Bulb T-Beams, 72."

Inserts for ¾"ϕ threaded dowel rods are to be double strut, coil type for interior T-Beams and single coil, flared loop type for exterior T-Beams.

Prestressing steel shall be non-galvanized high strength, low relaxation 7-wire strand, Grade 270.

The nominal diameter shall be ½" and the nominal cross-sectional area shall be 0.153 sq. in.

Non-prestressing steel shall conform to AASHTO designation M-31, M-42 or M-53 Grade 60.

Steel for lifting loops shall be non-deformed bars fy = 40,000 psi.

Required release strength, f'ci, shall be 5000 psi.

* See Framing Plan For Beam Locations

BEAM NO.*	Ⓐ	Ⓑ	Ⓒ	Ⓓ
2-1	116'-7 1/4"	46'-7 5/8"	8 1/8"	9 5/8"
2-2	116'-5"	46'-6 1/2"	7"	8 1/2"
2-3	116'-3"	46'-5 1/2"	6"	7 1/2"
2-4	116'-1"	46'-4 1/2"	5"	6 1/2"
2-5	115'-11 1/4"	46'-3 5/8"	4 1/8"	5 5/8"
2-6	115'-9 1/2"	46'-2 3/4"	3 1/4"	4 3/4"
2-7	115'-7 3/4"	46'-1 7/8"	2 3/8"	3 7/8"
2-8	115'-6"	46'-1"	1 1/2"	3"
3-1	116'-7 1/4"	46'-7 5/8"	8 1/8"	9 5/8"
3-2	116'-5"	46'-6 1/2"	7"	8 1/2"
3-3	116'-3"	46'-5 1/2"	6"	7 1/2"
3-4	116'-1"	46'-4 1/2"	5"	6 1/2"
3-5	115'-11 1/4"	46'-3 5/8"	4 1/8"	5 5/8"
3-6	115'-9 1/2"	46'-2 3/4"	3 1/4"	4 3/4"
3-7	115'-7 3/4"	46'-1 7/8"	2 3/8"	3 7/8"
3-8	115'-6"	46'-1"	1 1/2"	3"

NOTE: Beam No. 2-5 Denotes Span 2 Beam 5

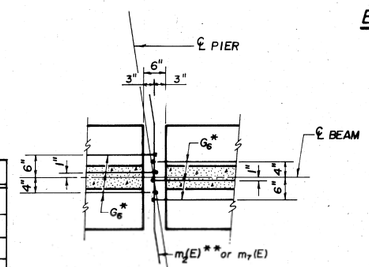

*TILT HOOK OF EXTERIOR BARS OF EXTERIOR BEAMS INWARD TO FIT WITHIN LIMITS OF CAST IN PLACE DIAPHRAGM.

**TIE $m_2(E)$ AND $m_7(E)$ BARS TO G_6 BARS WITH #9 WIRE TO PREVENT ANY MOVEMENT BETWEEN BARS.

DETAIL "A"

SEE SECTIONS B-B AND C-C ON SHEET 29 OF 47 FOR ELEVATION VIEWS OF DETAIL "A".

*** BAR LIST

Bar	No.	Size	Length	Shape
G_1	232	#5	7'-9"	L
G_2	16	#6	6'-11"	L
G_3	24	#6	31'-0"	—
G_4	64	#3	3'-5"	⌐
G_5	116	#4	3'-3"	—
G_6	6	#8	4'-6"	⊔

*** For one beam only.

BILL OF MATERIAL

Item	Unit	Total
Furnishing and Erecting Precast Prestressed Concrete Bulb T-Beams, 72"	FOOT	1856

BEAM DETAILS - SPANS #2 & #3
F.A.I. RT. 80 SEC. (50-2)BR
LASALLE COUNTY
STRUCTURE NO. 050-0221
STA. 672+09.32

(WESTBOUND STRUCTURE)

FOR INFORMATION ONLY

MODEL: Default
FILE NAME: \\Quigg\Projects\2018\18L018 Various Structure IDOT D3 Farnsworth PTB 161-21\Work Order 14 - I-80 Roadway and other\CADD\CADD Sheets\Existing Bridge Plans 0228-0229 078.dgn

QUIGG ENGINEERING INC

USER NAME = mwilson	DESIGNED -	REVISED -	
	DRAWN -	REVISED -	
PLOT SCALE = 2.0000 ' / in.	CHECKED -	REVISED -	
PLOT DATE = 10/2/2019	DATE - 10/4/2019	REVISED -	

STATE OF ILLINOIS
DEPARTMENT OF TRANSPORTATION

EXISTING STRUCTURAL PLANS
STRUCTURE NO. 050-0220/0221

SCALE: SHEET 34 OF 42 SHEETS STA. TO STA.

F.A.I RTE.	SECTION	COUNTY	TOTAL SHEETS	SHEET NO.
80	50-2(HB-2)BDR(HB-1)BR(BR)BR-1	LASALLE	328	283
		CONTRACT NO. 66H21		
		ILLINOIS	FED. AID PROJECT	

ROUTE NO.	SECTION	COUNTY	TOTAL SHEETS	PROJECT NO.
F.A.I. 80	*	LASALLE	196	159
FED. ROAD DIST. NO. 7		ILLINOIS	FED. AID PROJECT-	

BR. SHEET NO. 33

SHEETS 47

• (50-2)HBR-1, HB-2, BR

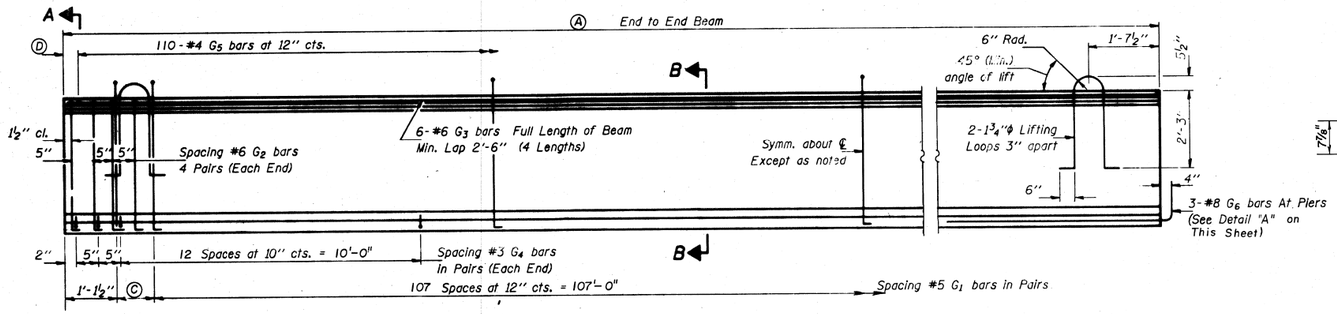

ELEVATION OF BEAM
(Showing Reinforcement & Dimensions)

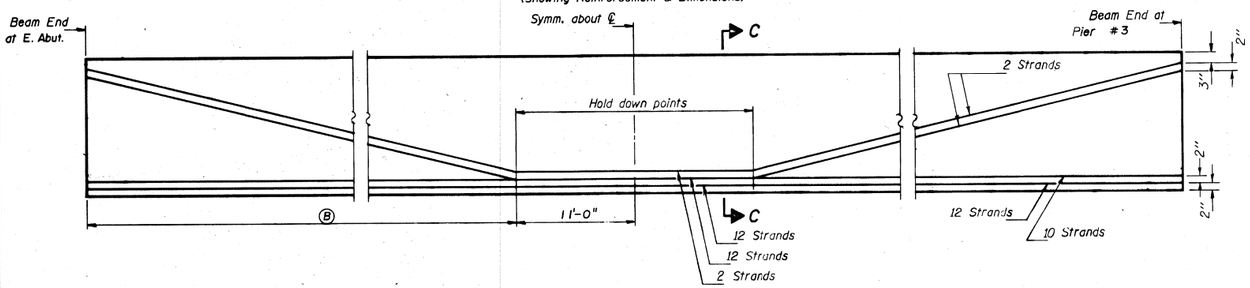

ELEVATION OF BEAM
(Showing Prestressing Steel)

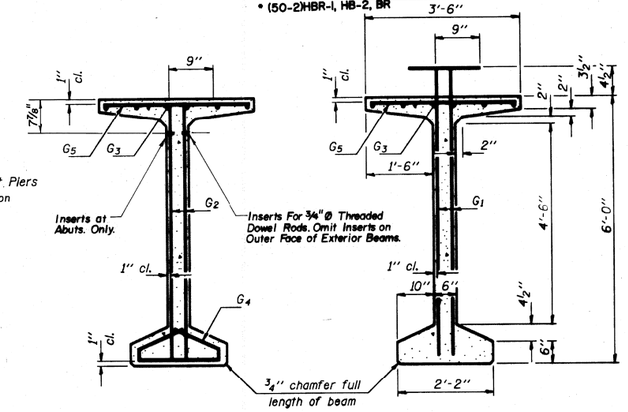

SECTION A-A

SECTION B-B

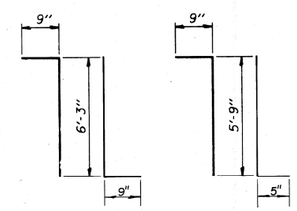

BAR G1

BAR G2

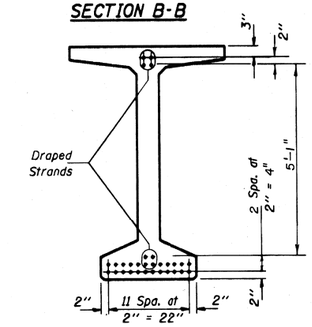

SECTION C-C

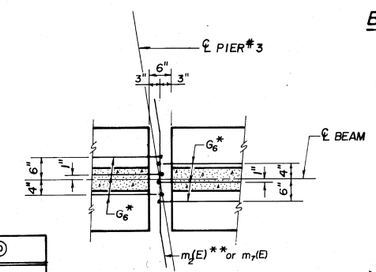

*TILT HOOK OF EXTERIOR BARS OF EXTERIOR BEAMS INWARD TO FIT WITHIN LIMITS OF CAST IN PLACE DIAPHRAGM.

**TIE m1(E) AND m7(E) BARS TO G6 BARS WITH #9 WIRE TO PREVENT ANY MOVEMENT BETWEEN BARS.

DETAIL "A"

SEE SECTION B-B ON SHEET 29 OF 47 FOR ELEVATION VIEW OF DETAIL "A".

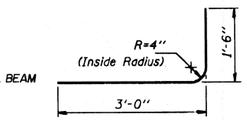

BAR G6

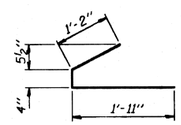

BAR G4

NOTES

All inserts, threaded dowel rods for inserts, reinforcing and Prestressing Steel, and other items which are cast into the Precast Concrete Bulb T-Beams shall be included in the contract unit price per lineal foot of "Furnishing and Erecting Precast Prestressed Concrete Bulb T-Beams, 72."

Inserts for ¾"φ threaded dowel rods are to be double strut, coil type for interior T-Beams and single coil, flared loop type for exterior T-Beams.

Prestressing steel shall be non-galvanized high strength, low relaxation 7-wire strand, Grade 270.

The nominal diameter shall be ½" and the nominal cross-sectional area shall be 0.153 sq. in.

Non-prestressing steel shall conform to AASHTO designation M-31, M-42 or M-53 Grade 60.

Steel for lifting loops shall be non-deformed bars fy = 40,000 psi.

Required release strength, f'ci, shall be 5000 psi.

* See Framing Plan For Beam Locations

BEAM NO.*	Ⓐ	Ⓑ	Ⓒ	Ⓓ
4-1	110'-11 3/4"	44'-5 7/8"	10 3/8"	11 7/8"
4-2	110'-9 3/4"	44'-4 7/8"	9 3/8"	10 7/8"
4-3	110'-7 3/4"	44'-3 7/8"	8 3/8"	9 7/8"
4-4	110'-5 3/4"	44'-2 7/8"	7 3/8"	8 7/8"
4-5	110'-4"	44'-2"	6 1/2"	8"
4-6	110'-2 1/2"	44'-1 1/4"	5 3/4"	7 1/4"
4-7	110'-0 3/4"	44'-0 3/8"	4 7/8"	6 3/8"
4-8	109'-11 1/4"	43'-11 5/8"	4 1/8"	5 5/8"

NOTE: Beam 4-5 Denotes Span 4 Beam 5.

*** BAR LIST

Bar	No.	Size	Length	Shape
G1	220	#5	7'-9"	⌐L
G2	16	#6	6'-11"	⌐L
G3	24	#6	29'-8"	—
G4	60	#3	3'-5"	⌐
G5	110	#4	3'-3"	—
G6	3	#8	4'-6"	⌐

*** For one beam only.

BILL OF MATERIAL

Item	Unit	Total
Furnishing and Erecting Precast Prestressed Concrete Bulb T-Beams, 72"	FOOT	884

BEAM DETAILS - SPAN #4
F.A.I. RT. 80 SEC. (50-2)BR
LASALLE COUNTY
STRUCTURE NO. 050-0221
STA. 672 + 09.32

(WESTBOUND STRUCTURE)

FOR INFORMATION ONLY

MODEL: Default
FILE NAME: \\QuigigProjects\2018\18L018 Various Structure IDOT D3 Farnsworth PTB 161-2\Work Order 14 - I-80 Roadway and other\CADD\CADD Sheets\Existing Bridge Plans 0228-0229-079.dgn

QUIGG ENGINEERING INC

USER NAME = mwilson	DESIGNED -	REVISED -
	DRAWN -	REVISED -
PLOT SCALE = 2.0000 ' / in.	CHECKED -	REVISED -
PLOT DATE = 10/2/2019	DATE - 10/4/2019	REVISED -

STATE OF ILLINOIS
DEPARTMENT OF TRANSPORTATION

EXISTING STRUCTURAL PLANS
STRUCTURE NO. 050-0220/0221

SCALE: SHEET 35 OF 42 SHEETS STA. TO STA.

F.A.I RTE.	SECTION	COUNTY	TOTAL SHEETS	SHEET NO.
80	50-2(HB-2)BDR(HB-1)BR(BR)BR-1	LASALLE	328	284
		CONTRACT NO. 66H21		
		ILLINOIS FED. AID PROJECT		

STATE OF ILLINOIS
DEPARTMENT OF TRANSPORTATION

ROUTE NO.	SECTION	COUNTY	TOTAL SHEETS	SHEET NO.
F.A.I. 80	*	LASALLE	196	160
FED. ROAD DIST. NO. 7	ILLINOIS	FED. AID PROJECT-		

SHEET NO. 34
SHEETS 47

* (50-2)HBR-1, HB-2, BR

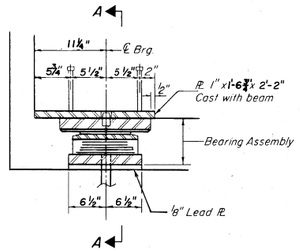

SECTION @ W. ABUT.
(LOOKING NORTH)

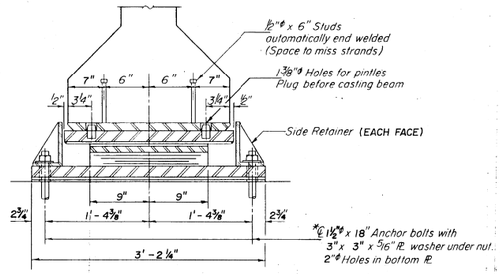

SECTION A-A

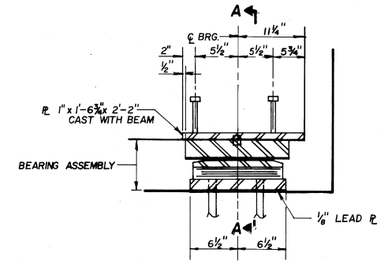

SECTION AT E. ABUT.
(LOOKING NORTH)

TYPE II TFE ELASTOMERIC EXP. BRG. AT ABUTMENTS

* NOTE: AFTER BEAMS HAVE BEEN ERECTED HOLES AT EXPANSION BEARINGS SHALL BE DRILLED AND ANCHOR BOLTS GROUTED IN PLACE. SEE SHEET 40 OF 47 FOR ANCHOR BOLT INSTALLATION.

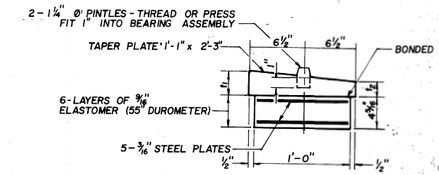

BEARING ASSEMBLY
NOTE: SHIM PLATES SHALL NOT BE PLACED UNDER BEARING ASSEMBLY
(LOOKING NORTH)

ELASTOMERIC BEARING, TYPE I
TAPERED PLATE THICKNESS

LOCATION	t_1	t_2
WEST BEARING PIER 1	4¼"	3⅞"
EAST BEARING PIER 1	3⅝"	3"
WEST BEARING PIER 3	3⅞"	3⅜"
EAST BEARING PIER 3	3⅛"	3"

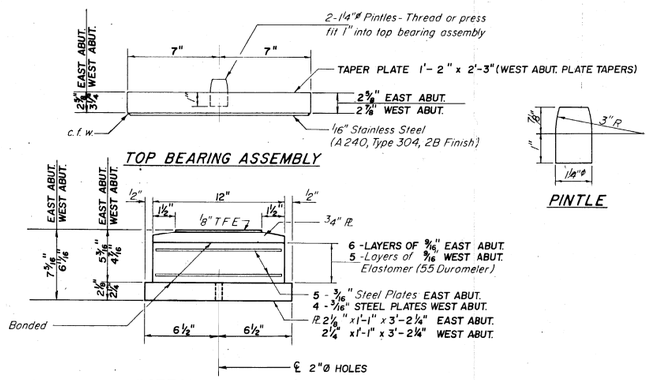

Note: The ⅛" TFE sheet shall be bonded directly to the top steel plate with a two-component, medium viscosity epoxy resin, conforming to the requirements of the Federal Specification MMM-A-134, Type I. The bond agent shall be applied on the full area of the contact surfaces.

Bonding of ⅛" TFE sheet during vulcanizing process will be permitted provided the process and method of adjusting assembly height is approved by the Engineer.

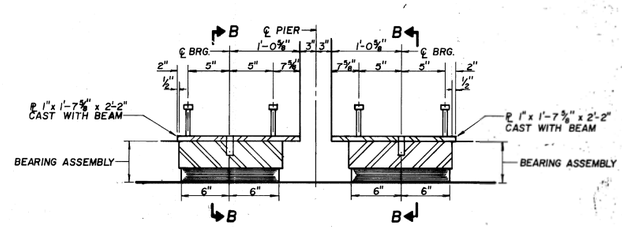

SECTION AT PIER
(LOOKING NORTH)

TYPE I ELASTOMERIC EXP. BRG. AT PIERS #1 & #3

* NOTE: AFTER BEAMS HAVE BEEN ERECTED HOLES AT EXPANSION BEARINGS SHALL BE DRILLED AND ANCHOR BOLTS GROUTED IN PLACE. SEE SHEET 40 OF 47 FOR ANCHOR BOLT INSTALLATION.

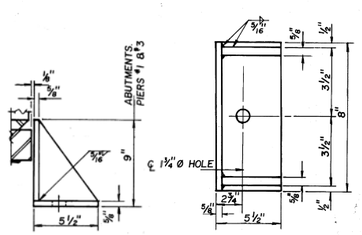

SIDE RETAINER
EQUIVALENT ROLLED ANGLE WITH STIFFENERS WILL BE ALLOWED IN LIEU OF WELDED PLATES.

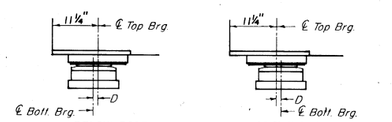

SETTING ANCHOR BOLTS AT EXP. BRG.
D = ⅛" per each 100' of expansion for every 15° temp. change from the normal temp. of 50°F.

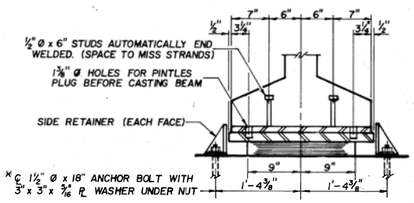

SECTION B-B

BILL OF MATERIAL

	Item	Unit	Total
	Elastomeric Bearing Assembly, Type I	Each	32
	Elastomeric Bearing Assembly, Type II	Each	16
**	Furnishing and Erecting Structural Steel	Lbs.	3637

** INCLUDES SIDE RETAINERS AND ANCHORS BOLTS ONLY.

BEARING DETAILS
FAI ROUTE 80 SEC.(50-2) BR
LASALLE COUNTY
STRUCTURE NO. 050-0221
STA. 672+09.32

(WESTBOUND STRUCTURE)

FOR INFORMATION ONLY

MODEL: Default
FILE NAME: \\QuiggProjects2018\18\018 Various Structure IDOT D3 Farnsworth PTB 161-21\Work Order 14 - I-80 Roadway and other\CADD\CADD Sheets\Existing Bridge Plans\0366121-int-Existing Bridge Plans 0228-0229 088.dgn

QUIGG ENGINEERING INC

USER NAME = mwilson	DESIGNED -	REVISED -	
	DRAWN -	REVISED -	
PLOT SCALE = 2.0000 ' / in.	CHECKED -	REVISED -	
PLOT DATE = 10/2/2019	DATE - 10/4/2019	REVISED -	

STATE OF ILLINOIS
DEPARTMENT OF TRANSPORTATION

EXISTING STRUCTURAL PLANS
STRUCTURE NO. 050-0220/0221

SCALE: | SHEET 36 OF 42 SHEETS | STA. | TO STA.

F.A.I RTE.	SECTION	COUNTY	TOTAL SHEETS	SHEET NO.
80	50-2(HB-2)BDR(HB-1)BR(BR)BR-1	LASALLE	328	285
		CONTRACT NO. 66H21		
		ILLINOIS	FED. AID PROJECT	

FAI ROUTE NO.	SEC	COUNTY	TOTAL SHEETS	SHEET NO
80	*	LASALLE	196	161
ILLINOIS PROJECT				

BR. SHEET 35 OF 47
* (50-2)HBR-I, HB-2, BR

END POST SHALL BE POURED AFTER BRIDGE PARAPET IS IN PLACE. FORM TOP SURFACE TO MATCH PARAPET GRADE. QUANTITY INCLUDED WITH CONCRETE SUPERSTRUCTURE.

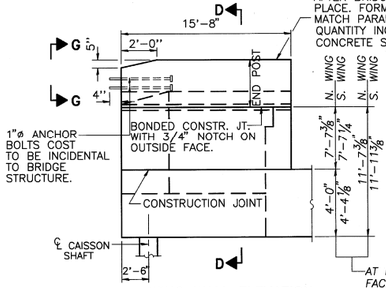

WING WALL ELEVATION

FOUNDATION DATA

TYPE: CAISSON SHAFTS 36"ø
CAPACITY: 112 TONS
MIN. LENGTH: 35 FEET
NO. REQUIRED: 9

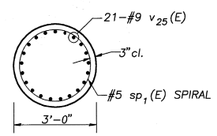

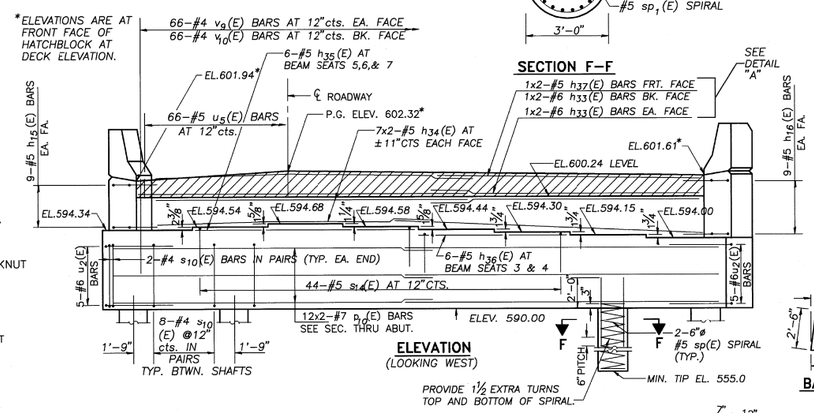

ELEVATION
(LOOKING WEST)

SEE DETAIL "A"

SECTION F-F
1x2-#5 h_{37}(E) BARS FRT. FACE
1x2-#6 h_{33}(E) BARS BK. FACE
1x2-#6 h_{33}(E) BARS EA. FACE

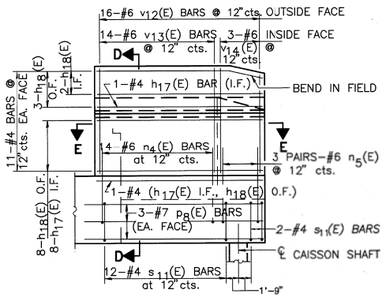

WING WALL ELEVATION
REINFORCEMENT

GENERAL NOTES

THE FOUNDATIONS DRILLED "CAISSON SHAFTS" ARE ASSUMED TO EXTEND TO ELEVATION 555.0. BELOW THIS ELEVATION THE SPECIAL PROVISIONS FOR "CAISSON SHAFTS" APPLY. ABOVE THIS ELEVATION "STANDARD SPECIFICATIONS FOR STRUCTURAL CONCRETE" APPLY. PERMANENT STEEL CASING IF USED WILL NOT BE PERMITTED ABOVE THE EXISTING GROUND SURFACE ELEVATIONS. COST OF "STEEL CASING" IS INCIDENTAL TO "CAISSON SHAFTS 36".
TIP ELEVATIONS MAY VARY DEPENDING ON FIELD CONDITIONS. QUANTITIES AND DETAILING ARE FOR THE ESTIMATED TIP ELEVATION. IF THE FINAL TIP ELEVATIONS ARE CHANGED DUE TO FIELD CONDITIONS, THE CAISSON SHAFT AND REINFORCEMENT SHALL BE ADJUSTED AS REQUIRED BY THE ENGINEER. THESE ADDITIONAL QUANTITIES REQUIRED BY THE ENGINEER AND FURNISHED BY THE CONTRACTOR WILL BE PAID FOR AT THE UNIT PRICE BID FOR THE WORK.
THE EXISTING WEST ABUTMENT FOOTING IS AT ELEVATION +/- 570.0. SHALE WAS EXCAVATED FOR CONSTRUCTION OF THAT ABUTMENT AND IT IS NOT KNOWN HOW FAR WEST THE EXCAVATION EXTENDS OR AT WHAT SLOPE THE WEST WALL OF THE EXCAVATION WAS MADE TO. FOR THIS REASON DRILLED SHAFTS AT THE NEW ABUTMENT LOCATION MAY PARALLEL THE WEST WALL OF THE EXCAVATION. THE HORIZONTAL DISTANCE BETWEEN THE DRILLED SHAFTS AND THE WEST WALL OF THE EXCAVATION IS NOT KNOWN. THE OLD EXCAVATION PROBABLY WAS BACK-FILLED WITH SAND-SEE LOG OF BORING NO. 8 (DRILLED 8-11-92).

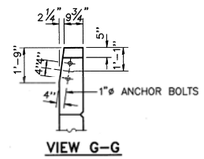

VIEW G-G

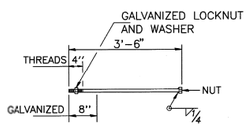

1"ø ANCHOR BOLT

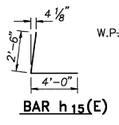

BAR h_{15}(E)

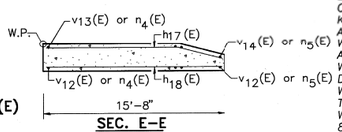

SEC. E-E

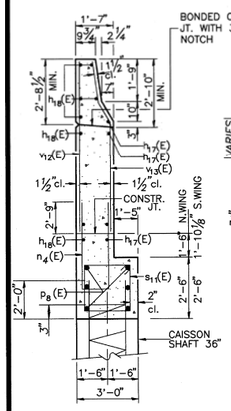

SEC. D-D

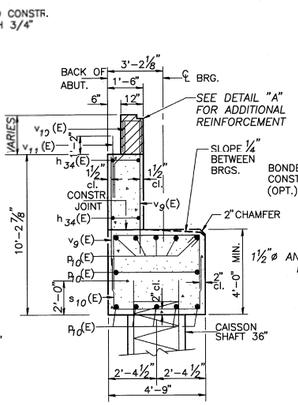

SEC. THRU ABUT.
(AT RIGHT ANGLES)

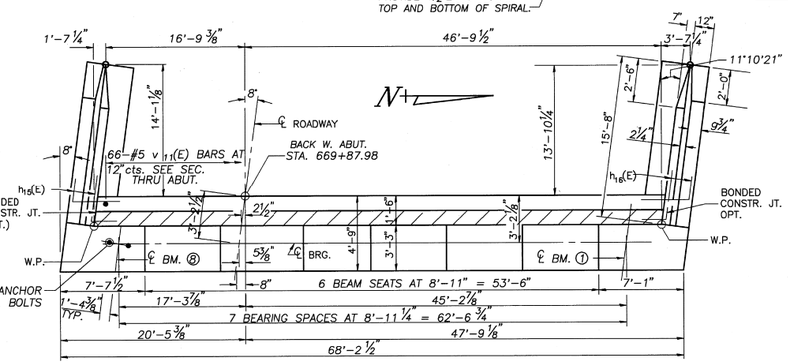

TOP VIEW

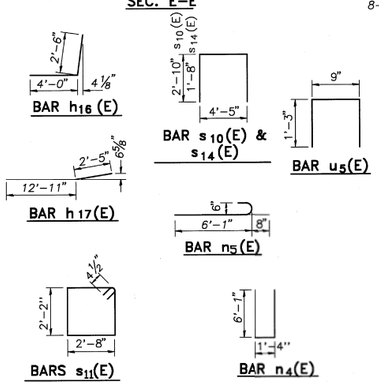

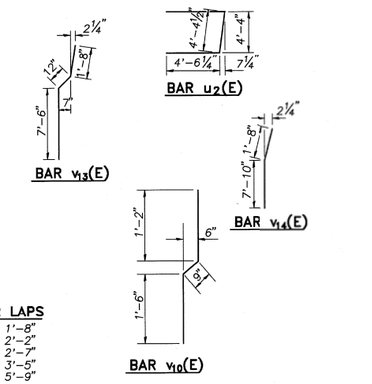

BILL OF MATERIAL

BAR	NO.	SIZE	LENGTH	SHAPE
h_{15}(E)	18	#5	6'-6"	
h_{16}(E)	18	#5	6'-6"	
h_{17}(E)	20	#4	15'-4"	
h_{18}(E)	28	#4	15'-4"	
h_{33}(E)	6	#6	33'-10"	
h_{34}(E)	28	#5	33'-8"	
h_{35}(E)	6	#5	26'-9"	
h_{36}(E)	6	#5	17'-10"	
h_{37}(E)	2	#5	33'-10"	
n_4(E)	28	#5	13'-6"	
n_5(E)	12	#5	6'-9"	
p_8(E)	12	#7	18'-4"	
p_{10}(E)	24	#7	35'-8"	
s_{10}(E)	104	#4	10'-1"	
s_{11}(E)	28	#4	10'-5"	
s_{14}(E)	44	#5	7'-9"	
*sp_1(E)	9	#5	35'-3"	
u_2(E)	10	#6	13'-5"	
u_5(E)	66	#5	3'-3"	
v_9(E)	132	#4	9'-3"	
v_{10}(E)	66	#4	3'-5"	
v_{11}(E)	66	#5	2'-8"	
v_{12}(E)	32	#6	10'-2"	
v_{13}(E)	28	#6	10'-2"	
v_{14}(E)	6	#6	9'-6"	
v_{25}(E)	189	#9	37'-0"	
CONCRETE STRUCTURES			CU. YD.	101.0
STRUCTURE EXCAVATION			CU. YD.	106
REINFORCEMENT BARS (EPOXY COATED)			** LBS.	39040
CAISSON SHAFTS 35"			CU. FT.	2225
ROCK EXCAVATION FOR STRUCTURES			CU. YD.	69

* LENGTH IS HEIGHT OF SPIRALS
** WEIGHT INCLUDES SPACERS FOR SPIRALS

NOTES

ALL EDGES SHALL HAVE STANDARD 3/4" CHAMFER EXCEPT AS SHOWN.

SPACE REINFORCEMENT IN CAP TO MISS ANCHOR BOLTS.

POUR STEPS MONOLITHICALLY WITH CAP.

HATCHED AREA TO BE POURED AFTER SUPERSTRUCTURE FORMS HAVE BEEN REMOVED. QUANTITY OF CONCRETE INCLUDED WITH "CONCRETE SUPERSTRUCTURE" ON SHEET # 27 OF 47

REINFORCEMENT BARS DESIGNATED (E) SHALL BE EPOXY COATED.

BARS INDICATED THUS 13x2-#5 ETC. INDICATES 13 LINES OF BARS WITH 2 LENGTHS PER LINE.

FOR ANCHOR BOLT INSTALLATION DETAILS SEE SHEET # 40 OF 47

MINIMUM SPIRAL LAP = 1-1/2 TURNS.

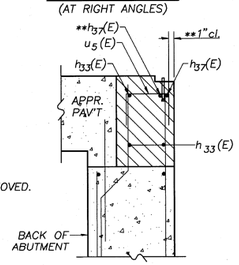

DETAIL "A"

**PLACE h_{37}(E) BAR IN BACK OF ANCHOR BOLT AS SHOWN IF REQUIRED TO MAINTAIN 1"cl. ANCHOR BOLTS SHOULD BE TIED TO h_{37}(E) BARS.

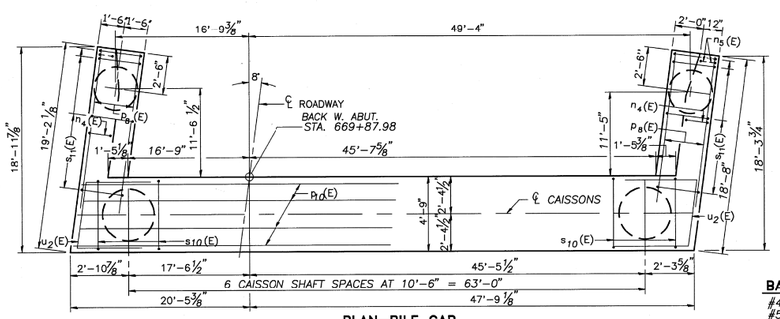

PLAN-PILE CAP

BAR LAPS

#4	1'-8"
#5	2'-2"
#6	2'-7"
#7	3'-5"
#9	5'-9"

WEST ABUTMENT
F.A.I. ROUTE 80 SEC.(50-2)BR
LASALLE COUNTY
STRUCTURE NO. 050-0221
STA. 672 + 09.32
(WESTBOUND STRUCTURE)

FOR INFORMATION ONLY

MODEL: Default
FILE NAME: \\QuigpProjects\2018\18L018 Various Structure IDOT D3 Farnsworth PTB 161-2 I1\Work Order 14 - I-80 Roadway and other\CADD\CADD Sheets\Existing Bridge Plans\0366V2-cht-Existing Bridge Plans 0228-0229-081.dgn

QUIGG ENGINEERING INC

USER NAME = mwilson	DESIGNED -	REVISED -
	DRAWN -	REVISED -
PLOT SCALE = 2.0000 ' / in.	CHECKED -	REVISED -
PLOT DATE = 10/2/2019	DATE - 10/4/2019	REVISED -

STATE OF ILLINOIS
DEPARTMENT OF TRANSPORTATION

EXISTING STRUCTURAL PLANS
STRUCTURE NO. 050-0220/0221

SCALE: | SHEET 37 OF 42 SHEETS | STA. | TO STA.

F.A.I RTE.	SECTION	COUNTY	TOTAL SHEETS	SHEET NO.
80	50-2(HB-2)BDR(HB-1)BR(BR)BR-1	LASALLE	328	286
		CONTRACT NO. 66H21		
	ILLINOIS	FED. AID PROJECT		

FAI ROUTE NO.	SEC	COUNTY	TOTAL SHEETS	SHEET NO
80	*	LASALLE	196	162

ILLINOIS PROJECT * (50-2)HBR-I, HB-2, BR
BR. SHEET 36 OF 47

END POST SHALL BE POURED AFTER BRIDGE PARAPET IS IN PLACE. FORM TOP SURFACE TO MATCH PARAPET GRADE. QUANTITY INCLUDED WITH CONCRETE SUPERSTRUCTURE.

BONDED CONSTR. JT. WITH 3/4" NOTCH ON OUTSIDE FACE.

CONSTRUCTION JOINT

* ELEVATIONS ARE AT FRONT FACE OF HATCH-BLOCK AT DECK ELEVATION.

WING WALL ELEVATION

PILE ENCASEMENT DETAIL

WELDED WIRE FABRIC 6x6-W4.0 x W4.0 WEIGHING 58# 1100 SQ. FT. THE COST OF EXCAVATION, CLASS SI CONCRETE ENCASEMENT AND REINFORCEMENT IS INCIDENTAL TO THE COST OF FURNISHING PILES. FORMS FOR ENCASEMENT MAY BE OMITTED WHEN SOIL CONDITIONS WILL PERMIT.

SECTION K-K

SEC. THRU ABUT.
(AT RIGHT ANGLES)

** PLACE h_{38}(E) BAR IN BACK OF ANCHOR BOLT AS SHOWN IF REQUIRED TO MAINTAIN 1" cl. ANCHOR BOLTS SHOULD BE TIED TO h_{38}(E) BARS.

SEC. H-H
(THRU COUNTERFORT)

DETAIL "A"

PILE DATA
TYPE: STEEL PILE HP 10x42
CAPACITY: DRIVEN TO REFUSAL
EST. LENGTH: 56 FEET
NO. REQUIRED: 10

ELEVATION
(LOOKING EAST)

TOP VIEW

PLAN FOOTING

NOTES:

SPACE REINFORCEMENT IN CAPS TO MISS ANCHOR BOLTS.

POUR STEPS MONOLITHICALLY WITH CAP.

REINFORCEMENT BARS DESIGNATED (E) SHALL BE EPOXY COATED.

BARS INDICATED THUS 13x2 - #5 ETC. INDICATES 13 LINES OF BAR WITH 2 LENGTHS PER LINE.

HATCHED AREA TO BE POURED AFTER SUPERSTRUCTURE FORMS HAVE BEEN REMOVED. QUANTITY OF CONCRETE INCLUDED WITH CONCRETE SUPERSTRUCTURE ON SHEET #27 OF 47.

ALL EDGES SHALL HAVE STANDARD 3/4" CHAMFER EXCEPT AS SHOWN.

FOR ANCHOR BOLT INSTALLATION DETAILS SEE SHEET #40 OF 47.

WING WALL ELEVATION
REINFORCEMENT

SEC. I-I

DETAIL "B"

BAR h_{23}(E)

BAR h_{22}(E)

BAR u_4(E)

BAR u_3(E)

BAR u_2(E)

BAR h_{28}(E), & h_{30}(E)

BAR n_6(E)

BAR v_{20}(E)

BAR v_{21}(E)

BAR s_{12}(E) & s_{14}(E)

BAR v_{18}(E)

BAR v_{22}(E)

BAR v_{23}(E)

BAR LAPS

#4	1'-8"
#5	2'-2"
#6	2'-7"
#7	3'-5"
#9	5'-9"

ABUTMENT
BILL OF MATERIAL

BAR	NO.	SIZE	LENGTH	SHAPE
h_{22}(E)	18	#5	2'-2"	
h_{23}(E)	18	#5	2'-2"	
h_{27}(E)	10	#4	24'-8"	
h_{28}(E)	2	#4	24' 8"	
h_{29}(E)	38	#5	24'-8"	
h_{30}(E)	38	#5	24'-8"	
h_{38}(E)	24	#6	22'-10"	
h_{39}(E)	28	#5	22'-8"	
h_{40}(E)	6	#6	21'-6"	
h_{41}(E)	6	#5	16'-3"	
h_{42}(E)	2	#5	21'-6"	
n_6(E)	130	#7	8'-4"	
p_9(E)	10	#7	23'-4"	
s_{12}(E)	88	#4	15'-3"	
s_{14}(E)	11	#4	7'-9"	
t_6(E)	116	#6	8'-2"	
t_7(E)	116	#6	7'-8"	
u_2(E)	14	#6	13'-5"	
u_3(E)	90	#6	10'-10"	
u_4(E)	41	#5	2'-9"	
v_{11}(E)	41	#5	2'-8"	
v_{17}(E)	82	#4	9'-3"	
v_{18}(E)	41	#4	3'-5"	
v_{19}(E)	56	#6	14'-6"	
v_{20}(E)	66	#6	14'-10"	
v_{21}(E)	8	#6	14'-5"	
v_{22}(E)	12	#9	12'-2"	
v_{23}(E)	12	#9	12'-0"	
v_{24}(E)	24	#6	11'-0"	
w_5(E)	36	#5	24'-11"	
w_4(E)	32	#5	26'-6"	
CONCRETE STRUCTURES		CU. YD.	201.6	
STRUCTURE EXCAVATION		CU. YD.	266	
REINFORCEMENT BARS (EPOXY COATED)		LBS.	19110	
FURN. STEEL PILE HP10x42		FT.	560	
DRIVING STEEL PILES		FT.	560	

WEST BOUND STRUCTURE
EAST ABUTMENT
F.A.I. ROUTE 80 SEC.(50-2)BR
LASALLE COUNTY
STRUCTURE NO. 050-0221
STA. 672 + 09.32

FOR INFORMATION ONLY

QUIGG ENGINEERING INC

USER NAME = mwilson	DESIGNED -	REVISED -	
	DRAWN -	REVISED -	
PLOT SCALE = 2.0000 ' / in.	CHECKED -	REVISED -	
PLOT DATE = 10/2/2019	DATE - 10/4/2019	REVISED -	

STATE OF ILLINOIS
DEPARTMENT OF TRANSPORTATION

EXISTING STRUCTURAL PLANS
STRUCTURE NO. 050-0220/0221

SCALE: | SHEET 38 OF 42 SHEETS | STA. | TO STA.

F.A.I RTE.	SECTION	COUNTY	TOTAL SHEETS	SHEET NO.
80	50-2(HB-2)BDR(HB-1)BR(BR)BR-1	LASALLE	328	287
		CONTRACT NO. 66H21		
		ILLINOIS	FED. AID PROJECT	

MODEL: Default
FILE NAME: \\Quigg\Projects\2018\18L018 Various Structure IDOT D3 Farnsworth PTB 161-21\Work Order 14 - I-80 Roadway and other\CADD\CADD Sheets\Existing Bridge Plans\D366121-cht-Existing Bridge Plans 0228-0229 082.dgn

FAI ROUTE NO.	SEC	COUNTY	TOTAL SHEETS	SHEET NO
80	*	LASALLE	196	163
ILLINOIS PROJECT				

BR. SHEET 37 OF 47
* (50-2)HBR-I, HB-2, BR

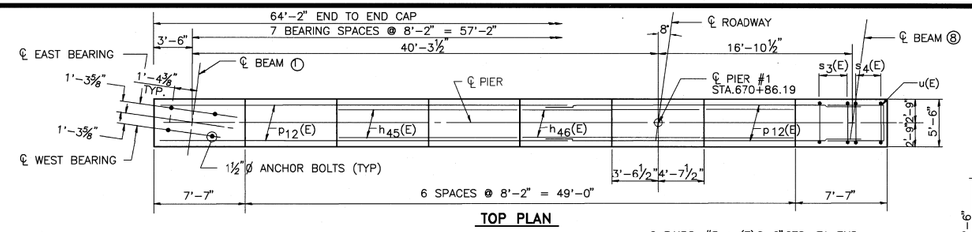

TOP PLAN

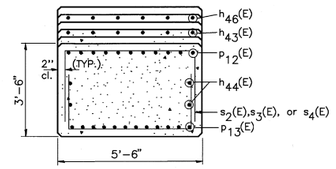

SEC. B-B

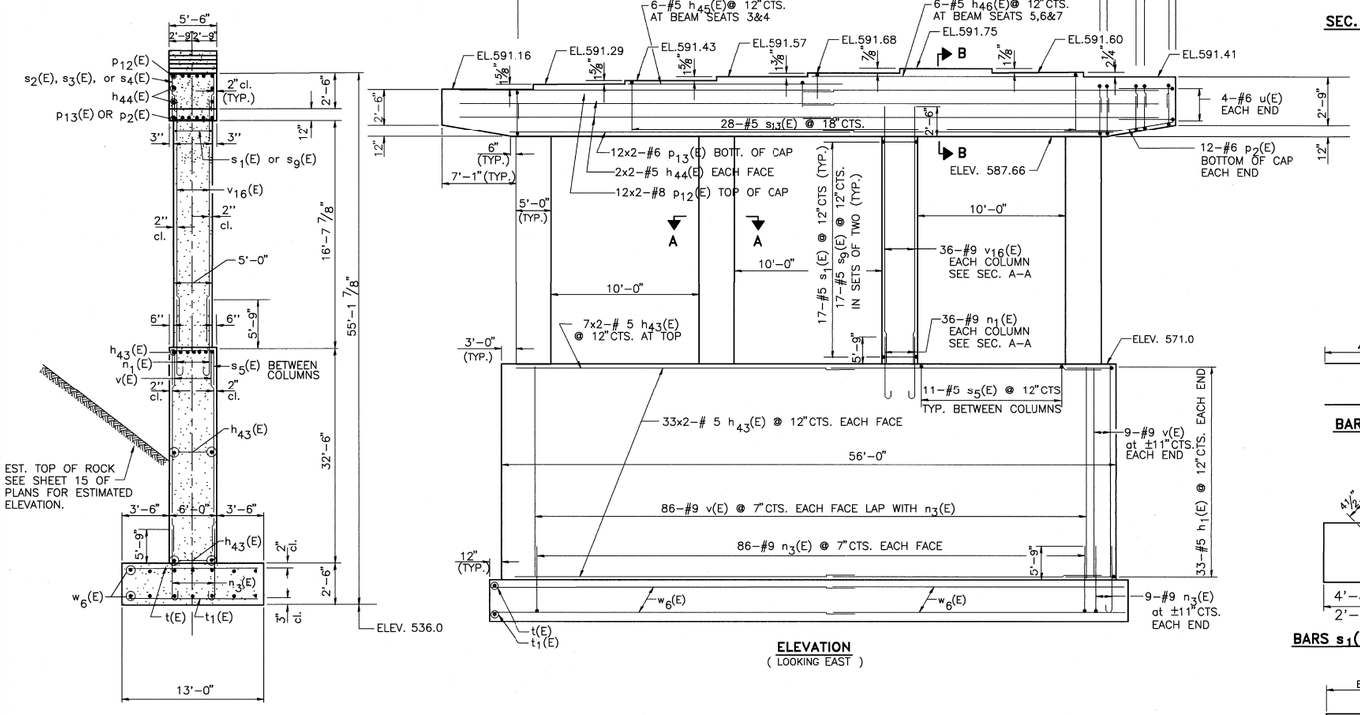

ELEVATION
(LOOKING EAST)

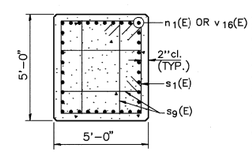

SEC. A-A

NORTH END VIEW

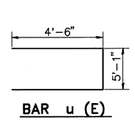

BAR u (E)

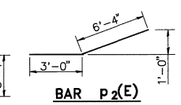

BAR p2(E)

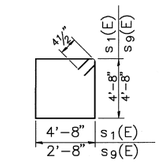

BARS s1(E)& s9(E)

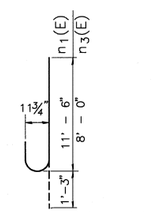

BARS n1(E)& n3(E)

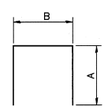

BARS s2(E), s3(E), s4(E), s5(E), & s13(E)

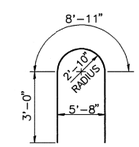

BAR h1(E)

BARS
A & B DIMENSIONS

Bar	A	B
s2(E)	2'-9"	5'-2"
s3(E)	2'-6"	5'-2"
s4(E)	2'-3"	5'-2"
s5(E)	3'-0"	5'-8"
s13(E)	2'-0"	5'-2"

MAX. SOIL PRESSURE
3.2 T.S.F.

MIN. BAR LAP

#5	BARS	3'-0"
#6	BARS	2'-7"
#7	BARS	3'-5"
#8	BARS	6'-4"
#9	BARS	5'-9"

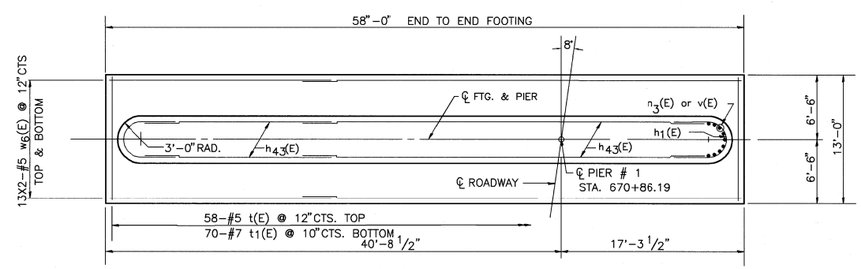

FOOTING PLAN

GENERAL NOTES

SPACE REINFORCEMENT IN CAP TO MISS ANCHOR BOLTS.

POUR STEPS MONOLITHICALLY WITH CAP.

ALL EDGES SHALL HAVE STANDARD ¾" CHAMFERS EXCEPT AS NOTED.

CONCRETE FOR THE PIER FOOTING SHALL BE POURED AGAINST ROCK. NO FORMING IS REQUIRED DURING CONSTRUCTION OF THE PIER FOOTING.

REINFORCEMENT BARS DESIGNATED (E) SHALL BE EPOXY COATED.

BARS INDICATED THUS 13x2-#5 ETC. INDICATES 13 LINES OF BARS WITH 2 LENGTHS PER LINE.

PIER FOOTING IS TO BE SET ENTIRELY IN ROCK WITH A MINIMUM ADDITIONAL EMBEDMENT OF 12" IN REASONABLY SOUND ROCK, WHICHEVER IS DEEPER.

FOR ANCHOR BOLT INSTALLATION DETAILS, SEE SHEET #40 OF 47.

ESTIMATED TOP OF ROCK ELEVATIONS WERE AVERAGED FROM SOIL BORINGS ON EITHER SIDE OF THE PIER. THE LIMITS AND SLOPE OF THE WEST FACE OF THE ACTUAL EXCAVATION FROM ORIGINAL PIER CONSTRUCTION IS NOT KNOWN. IF THE FINAL FOOTING ELEVATIONS ARE CHANGED DUE TO FIELD CONDITIONS THE CONCRETE, REINFORCEMENT, AND EXCAVATION QUANTITIES SHALL BE ADJUSTED AS REQUIRED BY THE ENGINEER. THESE ADJUSTED QUANTITIES REQUIRED BY THE ENGINEER AND FURNISHED BY THE CONTRACTOR WILL BE PAID FOR AT THE UNIT PRICE BID FOR THE WORK. THE ENGINEER IN ACCORDANCE WITH ARTICLE 502.03 OF THE STANDARD SPECIFICATIONS SHALL DETERMINE THE ELEVATION AT WHICH THE IN PLACE MATERIAL QUALIFIES AS ROCK ELEVATION.

BILL OF MATERIAL

Bar	No.	Size	Length	Shape
h1(E)	66	# 5	14'-11"	
h43(E)	146	# 5	26'-6"	
h44(E)	8	# 5	33'-5"	
h45(E)	6	# 5	16'-4"	
h46(E)	6	# 5	24'-6"	
n1(E)	144	# 9	12'-9"	
n3(E)	190	# 9	9'-3"	
p2(E)	24	# 6	9'-4"	
p12(E)	24	# 8	35'-1"	
p13(E)	24	# 6	26'-9"	
s1(E)	68	# 5	19'-5"	
s2(E)	104	# 5	10'-8"	
s3(E)	24	# 5	10'-2"	
s4(E)	24	# 5	9'-8"	
s5(E)	33	# 5	11'-8"	
s9(E)	136	# 5	15'-5"	
s13(E)	28	# 5	9'-2"	
t(E)	58	# 5	12'-8"	
t1(E)	70	# 7	12'-8"	
u(E)	8	# 6	14'-1"	
v(E)	190	# 9	32'-4"	
v16(E)	144	# 9	19'-2"	
w6(E)	52	# 5	30'-4"	

CONCRETE STRUCTURES	CU. YD.	575.4
REINFORCEMENT BARS EPOXY COATED	LBS.	55460
BRACED EXCAVATION	CU. YD.	625
ROCK EXCAVATION FOR STRUCTURES	CU. YD.	503

PIER # 1
F.A.I. ROUTE 80 SEC.(50-2)BR
LASALLE COUNTY
STR. NO.050-0221
STA. 672+09.32
(WESTBOUND STRUCTURE)

FOR INFORMATION ONLY

MODEL: Default
FILE NAME: \\QuiggProjects2018\018 Various Structure IDOT D3 Farnsworth PTB 161-21\Work Order 14 - I-80 Roadway and other\CADD\CADD Sheets\Existing Bridge Plans\0366H21-sht-Existing Bridge Plans 0228-0229 083.dgn

QUIGG ENGINEERING INC

USER NAME = mwilson	DESIGNED -	REVISED -	
	DRAWN -	REVISED -	
PLOT SCALE = 2.0000 ' / in.	CHECKED -	REVISED -	
PLOT DATE = 10/2/2019	DATE - 10/4/2019	REVISED -	

STATE OF ILLINOIS
DEPARTMENT OF TRANSPORTATION

EXISTING STRUCTURAL PLANS
STRUCTURE NO. 050-0220/0221

SCALE: | SHEET 39 OF 42 SHEETS | STA. | TO STA.

F.A.I RTE.	SECTION	COUNTY	TOTAL SHEETS	SHEET NO.
80	50-2(HB-2)BDR(HB-1)BR(BR)BR-1	LASALLE	328	288
		CONTRACT NO. 66H21		
		ILLINOIS	FED. AID PROJECT	

FAI ROUTE NO.	SEC	COUNTY	TOTAL SHEETS	SHEET NO
80	*	LASALLE	196	164
ILLINOIS PROJECT				

• (50-2)HBR-I, HB-2, BR BR. SHEET 38 OF 47

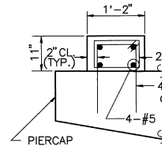

DETAIL "A"

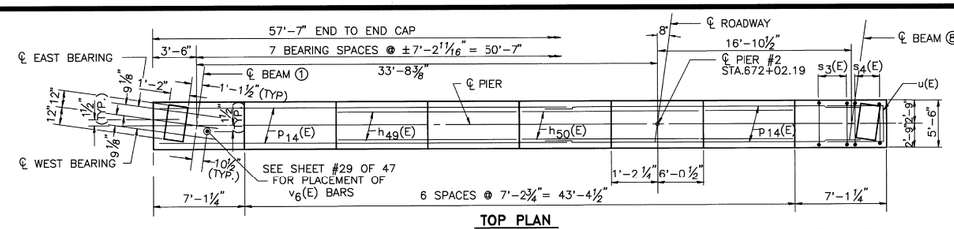

TOP PLAN

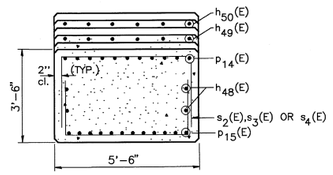

SEC. B-B

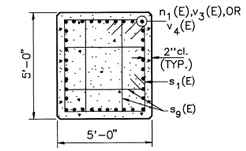

SEC. A-A

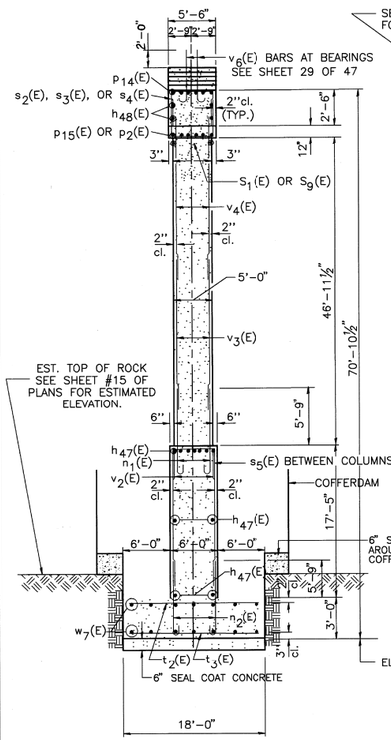

NORTH END VIEW

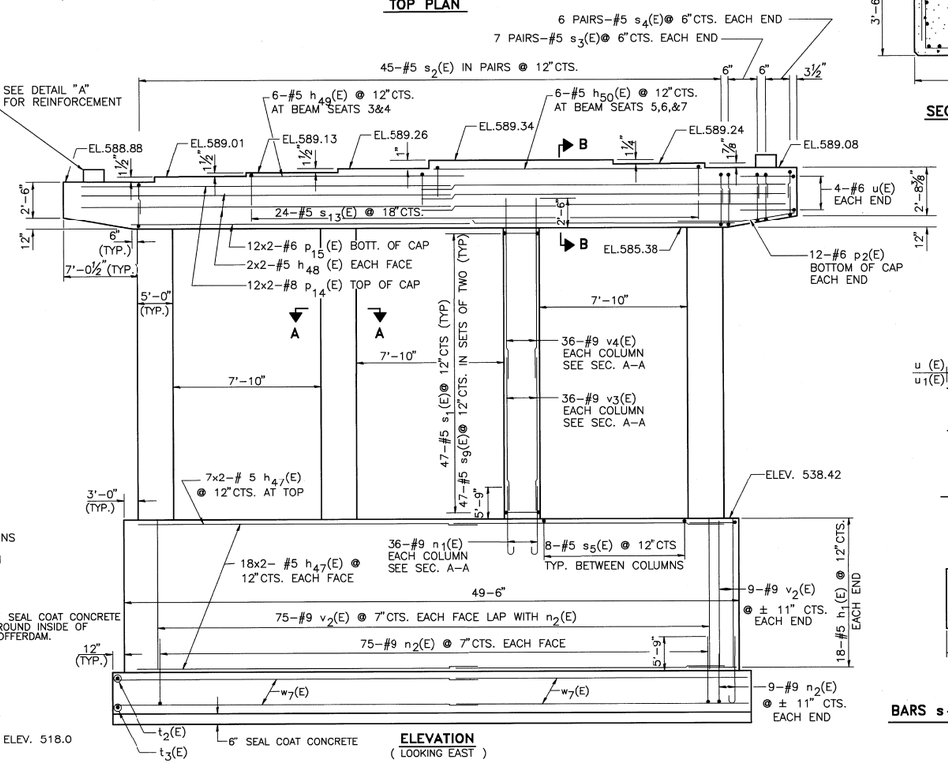

ELEVATION
(LOOKING EAST)

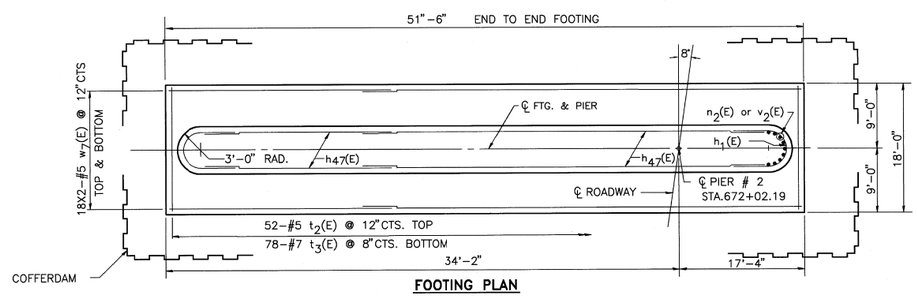

FOOTING PLAN

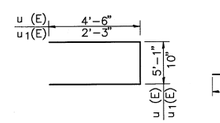

BARS u (E) & u1(E)

BAR p2(E)

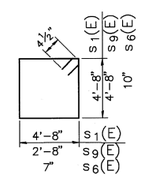

BARS s1(E) ,s6(E) & s9(E)

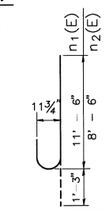

BARS n1(E) & n2(E)

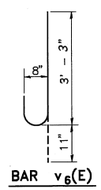

BAR v6(E)

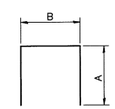

BARS s2(E), s3(E), s4(E), s5(E) & s13(E)

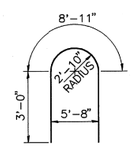

BAR h1(E)

BARS A & B DIMENSIONS

Bar	A	B
s2(E)	2'-9"	5'-2"
s3(E)	2'-6"	5'-2"
s4(E)	2'-3"	5'-2"
s5(E)	3'-0"	5'-8"
s13(E)	2'-0"	5'-2"

MAX. SOIL PRESSURE
2.5 T.S.F.

MIN. BAR LAP

#5	BARS	3'-0"
#6	BARS	2'-7"
#7	BARS	3'-5"
#8	BARS	6'-4"
#9	BARS	5'-9"

GENERAL NOTES

SPACE REINFORCEMENT IN CAP TO MISS ANCHOR BOLTS.

POUR STEPS MONOLITHICALLY WITH CAP.

ALL EDGES SHALL HAVE STANDARD 3/4" CHAMFERS EXCEPT AS NOTED.

CONCRETE FOR THE PIER FOOTING SHALL BE POURED AGAINST ROCK. NO FORMING IS REQUIRED DURING CONSTRUCTION OF THE PIER FOOTING.

REINFORCEMENT BARS DESIGNATED (E) SHALL BE EPOXY COATED.

BARS INDICATED THUS 13x2-#5 ETC. INDICATES 13 LINES OF BARS WITH 2 LENGTHS PER LINE.

PIER FOOTING IS TO BE SET ENTIRELY IN ROCK WITH A MINIMUM ADDITIONAL EMBEDMENT OF 12" IN REASONABLY SOUND ROCK, WHICHEVER IS DEEPER UNDERCUT FOOTING ELEVATION 6" AND, IMMEDIATELY AFTER THE LAST LIFT OF EXCAVATION IS REMOVED POUR 6" OF SEAL COAT CONCRETE ON THE ROCK.

PRIOR TO REMOVING THE COFFERDAM, THE FOOTING SHALL BE BACKFILLED TO THE ORIGINAL BEDROCK SURFACE WITH LEAN CONCRETE. COST INCIDENTAL TO BACKFILLING.

ESTIMATED TOP OF ROCK ELEVATIONS WERE AVERAGED FROM SOIL BORINGS ON EITHER SIDE OF THE PIER. THE LIMITS AND SLOPE OF THE WEST FACE OF THE ACTUAL EXCAVATION FROM ORIGINAL PIER CONSTRUCTION IS NOT KNOWN. IF THE FINAL FOOTING ELEVATIONS ARE CHANGED DUE TO FIELD CONDITIONS THE CONCRETE, REINFORCEMENT AND EXCAVATION QUANTITIES SHALL BE ADJUSTED AS REQUIRED BY THE ENGINEER. THESE ADJUSTED QUANTITIES REQUIRED BY THE ENGINEER AND FURNISHED BY THE CONTRACTOR WILL BE PAID FOR AT THE UNIT PRICE BID FOR THE WORK. THE ENGINEER IN ACCORDANCE WITH ARTICLE 502.03 OF THE STANDARD SPECIFICATIONS SHALL DETERMINE THE ELEVATION AT WHICH THE IN PLACE MATERIAL QUALIFIES AS ROCK EXCAVATION.

BILL OF MATERIAL

Bar	No.	Size	Length	Shape
h1(E)	36	# 5	14'-11"	
h47(E)	86	# 5	23'-3"	
h48(E)	8	# 5	30'-2"	
h49(E)	6	# 5	14'-4"	
h50(E)	6	# 5	21'-4"	
h51(E)	8	# 5	1'-8"	
n1(E)	144	# 9	12'-9"	
n2(E)	168	# 9	9'-9"	
p2(E)	24	# 6	9'-4"	
p14(E)	24	# 8	31'-10"	
p15(E)	24	# 6	23'-6"	
s1(E)	188	# 5	19'-5"	
s2(E)	90	# 5	10'-8"	
s3(E)	28	# 5	10'-2"	
s4(E)	24	# 5	9'-8"	
s5(E)	24	# 5	11'-8"	
s6(E)	4	# 4	3'-7"	
s9(E)	376	# 5	15'-5"	
s13(E)	24	# 5	9'-2"	
t2(E)	52	# 5	17'-8"	
t3(E)	78	# 7	17'-8"	
u (E)	8	# 6	14'-1"	
u1(E)	8	# 5	5'-4"	
v2(E)	168	# 9	17'-3"	
v3(E)	144	# 9	28'-0"	
v4(E)	144	# 9	27'-3"	
v6(E)	84	# 8	4'-2"	
w7(E)	72	# 5	27'-1"	
CONCRETE STRUCTURES			CU. YD.	506.7
REINFORCEMENT BARS EPOXY COATED			LBS.	73950
COFFERDAM EXCAVATION			CU. YD.	45
ROCK EXCAVATION FOR STRUCTURES			CU. YD.	120
COFFERDAMS			EACH	1
SEAL COAT CONCRETE			CU. YD.	22.6

PIER # 2
F.A.I. ROUTE 80 SEC.(50-2)BR
LASALLE COUNTY
STR. NO. 050-0221
STA. 672+09.32
(WESTBOUND STRUCTURE)

FOR INFORMATION ONLY

MODEL: Default
FILE NAME: \\QuiggProjects\2018\IL018 Various Structure IDOT D3 Farnsworth PTB 161-2\Work Order 14 - I-80 Roadway and other\CADD\CADD Sheets\Existing Bridge Plans 0228-0229 084.dgn

QUIGG ENGINEERING INC

USER NAME = mwilson	DESIGNED -	REVISED -	
	DRAWN -	REVISED -	
PLOT SCALE = 2.0000 ' / in.	CHECKED -	REVISED -	
PLOT DATE = 10/2/2019	DATE - 10/4/2019	REVISED -	

STATE OF ILLINOIS
DEPARTMENT OF TRANSPORTATION

EXISTING STRUCTURAL PLANS
STRUCTURE NO. 050-0220/0221

SCALE: SHEET 40 OF 42 SHEETS STA. TO STA.

F.A.I RTE.	SECTION	COUNTY	TOTAL SHEETS	SHEET NO.
80	50-2(HB-2)BDR(HB-1)BR(BR)BR-1	LASALLE	328	289
		CONTRACT NO. 66H21		
		ILLINOIS FED. AID PROJECT		

FAI ROUTE NO.	SEC	COUNTY	TOTAL SHEETS	SHEET NO
80	*	LASALLE	196	165
ILLINOIS PROJECT				

* (50-2)HBR-I, HB-2, BR

BR. SHEET 39 OF 47

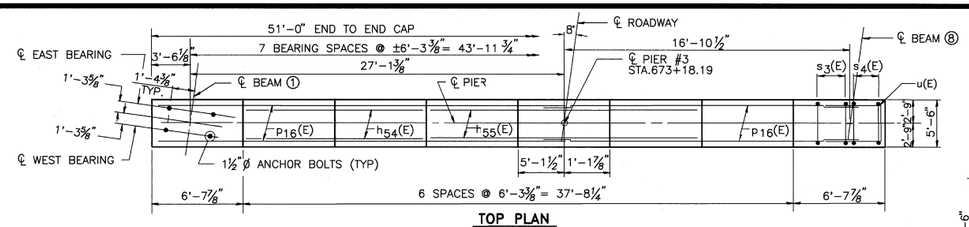

TOP PLAN

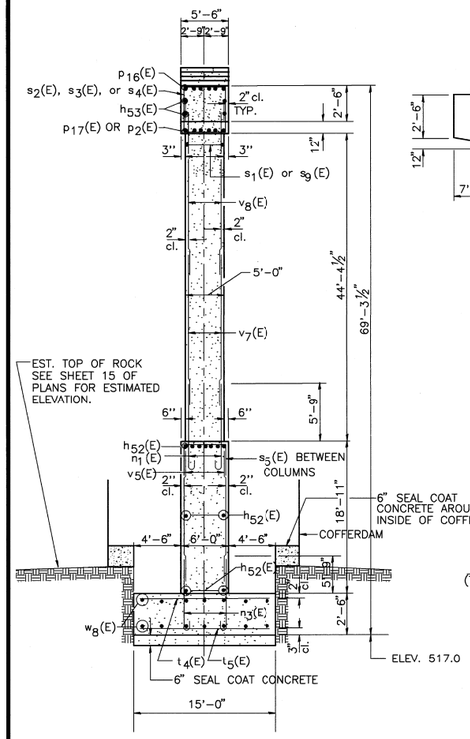

NORTH END VIEW

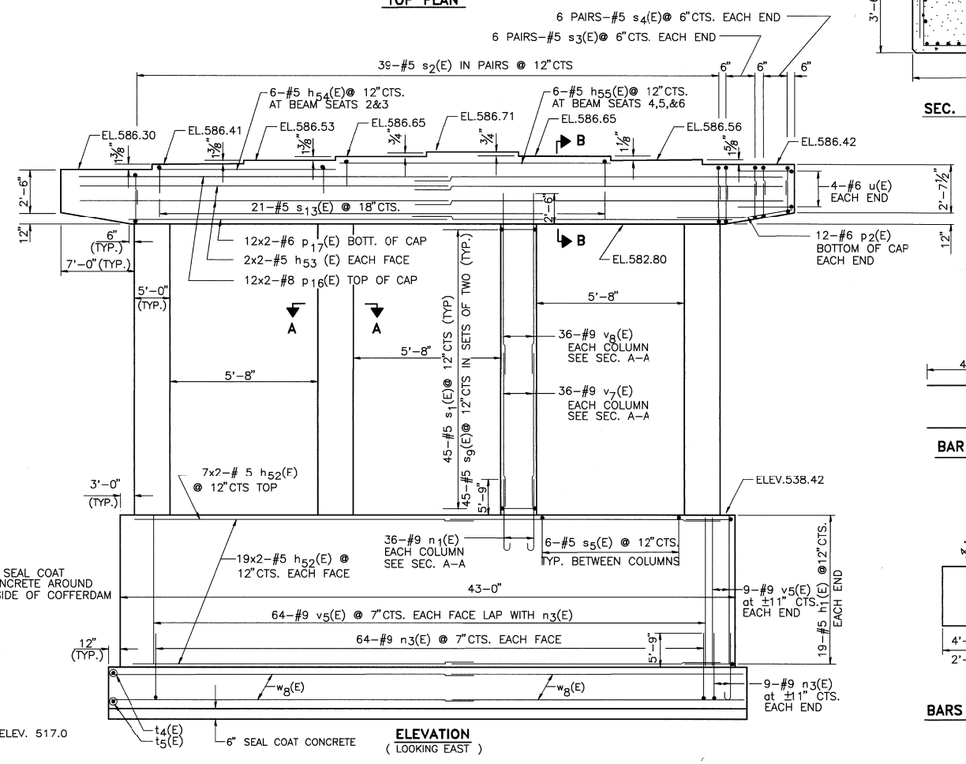

ELEVATION
(LOOKING EAST)

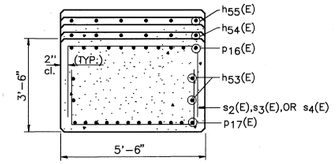

SEC. B-B

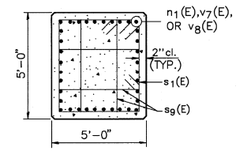

SEC. A-A

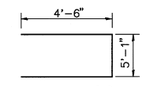

BAR u (E)

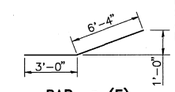

BAR p2(E)

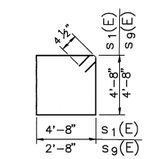

BARS s1(E)& s9(E)

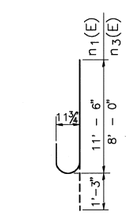

BARS n1(E)&n3(E)

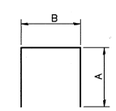

BARS s2(E), s3(E), s4(E), s5(E), & s13(E)

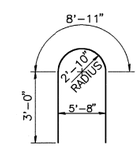

BAR h1(E)

BARS

A & B DIMENSIONS

Bar	A	B
s2(E)	2'-9"	5'-2"
s3(E)	2'-6"	5'-2"
s4(E)	2'-3"	5'-2"
s5(E)	3'-0"	5'-8"
s13(E)	2'-0"	5'-2"

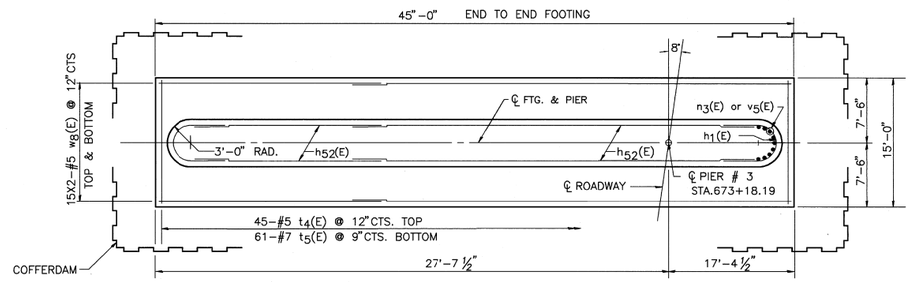

FOOTING PLAN

MAX. SOIL PRESSURE

3.0 T.S.F.

MIN. BAR LAP

#5	BARS	3'-0"
#6	BARS	2'-7"
#7	BARS	3'-5"
#8	BARS	6'-4"
#9	BARS	5'-9"

GENERAL NOTES

SPACE REINFORCEMENT IN CAP TO MISS ANCHOR BOLTS.

POUR STEPS MONOLITHICALLY WITH CAP.

ALL EDGES SHALL HAVE STANDARD 3/4" CHAMFERS EXCEPT AS NOTED.

CONCRETE FOR THE PIER FOOTING SHALL BE POURED AGAINST ROCK. NO FORMING IS REQUIRED DURING CONSTRUCTION OF THE PIER FOOTING.

REINFORCEMENT BARS DESIGNATED (E) SHALL BE EPOXY COATED.

BARS INDICATED THUS 13x2-#5 ETC. INDICATES 13 LINES OF BARS WITH 2 LENGTHS PER LINE.

PIER FOOTING IS TO BE SET ENTIRELY IN ROCK WITH A MINIMUM ADDITIONAL EMBEDMENT OF 12" IN REASONABLY SOUND ROCK, WHICHEVER IS DEEPER. UNDERCUT FOOTING ELEVATION 6" AND IMMEDIATELY AFTER THE LAST LIFT OF EXCAVATION IS REMOVED POUR 6" OF SEAL COAT CONCRETE ON THE ROCK.

PRIOR TO REMOVING THE COFFERDAM, THE FOOTING SHALL BE BACKFILLED TO THE ORIGINAL BEDROCK SURFACE WITH LEAN CONCRETE. COST INCIDENTAL TO BACKFILLING.

FOR ANCHOR BOLT INSTALLATION DETAILS, SEE SHEET #40 OF 47.

ESTIMATED TOP OF ROCK ELEVATIONS WERE AVERAGED FROM SOIL BORINGS ON EITHER SIDE OF THE PIER. THE LIMITS AND SLOPE OF THE WEST FACE OF THE ACTUAL EXCAVATION FROM ORIGINAL PIER CONSTRUCTION IS NOT KNOWN. IF THE FINAL FOOTING ELEVATIONS ARE CHANGED DUE TO FIELD CONDITIONS THE CONCRETE, REINFORCEMENT, AND EXCAVATION QUANTITIES SHALL BE ADJUSTED AS REQUIRED BY THE ENGINEER. THESE ADJUSTED QUANTITIES REQUIRED BY THE ENGINEER AND FURNISHED BY THE CONTRACTOR WILL BE PAID FOR AT THE UNIT PRICE BID TOR THE WORK. THE ENGINEER IN ACCORDANCE WITH ARTICLE 502.03 OF THE STANDARD SPECIFICATIONS SHALL DETERMINE THE ELEVATION AT WHICH THE IN PLACE MATERIAL QUALIFIES AS ROCK ELEVATION.

BILL OF MATERIAL

Bar	No.	Size	Length	Shape
h1(E)	38	# 5	14'-1"	
h52(E)	90	# 5	20'-0"	
h53(E)	8	# 5	26'-10"	
h54(E)	6	# 5	12'-6"	
h55(E)	6	# 5	18'-9"	
n1(E)	144	# 9	12'-9"	
n3(E)	146	# 9	9'-3"	
p2(E)	24	# 6	9'-4"	
p16(E)	24	# 8	28'-6"	
p17(E)	24	# 6	20'-4"	
s1(E)	180	# 5	19'-5"	
s2(E)	78	# 5	10'-8"	
s3(E)	24	# 5	10'-2"	
s4(E)	24	# 5	9'-8"	
s5(E)	18	# 5	11'-8"	
s9(E)	360	# 5	15'-5"	
s13(E)	21	# 5	9'-2"	
t4(E)	45	# 5	14'-8"	
t5(E)	61	# 7	14'-8"	
u (E)	8	# 6	14'-1"	
v5(E)	146	# 9	18'-9"	
v7(E)	144	# 9	27'-0"	
v8(E)	144	# 9	25'-8"	
w8(E)	60	# 5	23'-10"	
CONCRETE STRUCTURES			CU. YD.	439.6
REINFORCEMENT BARS EPOXY COATED			LBS.	67110
COFFERDAM EXCAVATION			CU. YD.	241
ROCK EXCAVATION FOR STRUCTURES			CU. YD.	163
COFFERDAMS			EACH	1
SEAL COAT CONCRETE			CU. YD.	17.2

PIER # 3
F.A.I. ROUTE 80 SEC.(50-2)BR
LASALLE COUNTY
STR. NO. 050-0221
STA. 672+09.32
(WESTBOUND STRUCTURE)

FOR INFORMATION ONLY

MODEL: Default
FILE NAME: \\QuiggProjects\2018\18L018 Various Structure IDOT D3 Farnsworth PTB 161-2\Work Order 14 - I-80 Roadway and other\CADD\CADD Sheets\Existing Bridge Plans\D3661H21-sht-Existing Bridge Plans 0228-0229 085.dgn

QUIGG ENGINEERING INC

USER NAME = mwilson	DESIGNED -	REVISED -	
	DRAWN -	REVISED -	
PLOT SCALE = 2.0000 ' / in.	CHECKED -	REVISED -	
PLOT DATE = 10/2/2019	DATE - 10/4/2019	REVISED -	

STATE OF ILLINOIS
DEPARTMENT OF TRANSPORTATION

EXISTING STRUCTURAL PLANS
STRUCTURE NO. 050-0220/0221

SCALE: | SHEET 41 OF 42 SHEETS | STA. | TO STA.

F.A.I RTE.	SECTION	COUNTY	TOTAL SHEETS	SHEET NO.
80	50-2(HB-2)BDR(HB-1)BR(BR)BR-1	LASALLE	328	290
		CONTRACT NO. 66H21		
		ILLINOIS	FED. AID PROJECT	

F.A.I. ROUTE NO.	SEC	COUNTY	TOTAL SHEETS	SHEET NO.
80	*	LASALLE	196	166
ILLINOIS PROJECT				

BR SHEET 40 OF 47
* (50-2)HBR-1, HB-2, BR

"D	E	H	K	"d"
1"	1 1/8"	13/16"	1 3/4"	1/4"
1 1/2"	1 5/8"	1 5/16"	2 1/8"	1/2"
2"	2 1/8"	1 13/16"	2 7/8"	1/2"
2 1/2"	2 5/8"	2 5/16"	3 3/8"	1"

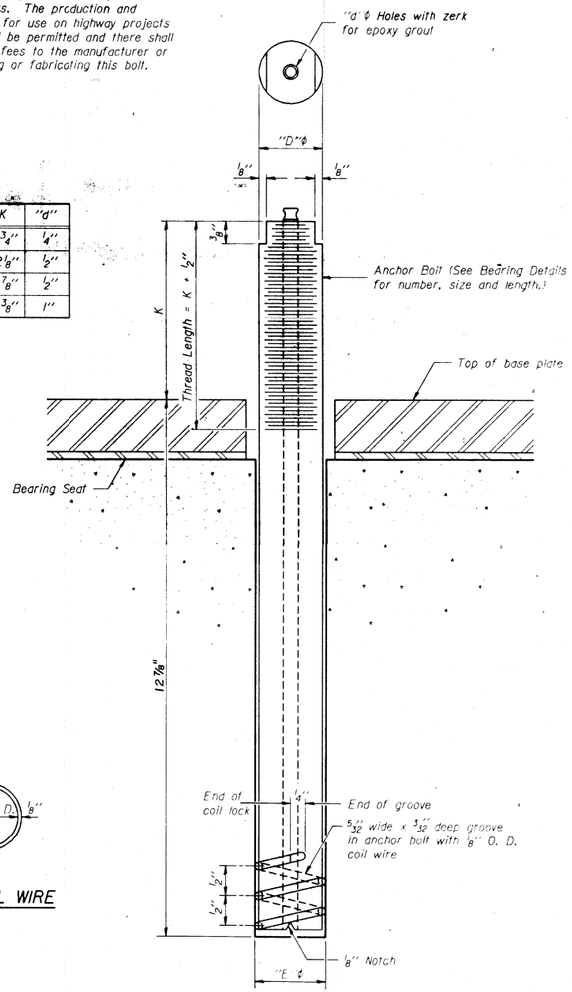

ILLINOIS COIL-LOCK ANCHOR BOLT

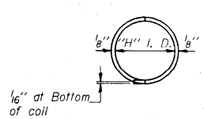

PLAN-COIL WIRE

MATERIALS FOR ILLINOIS COIL-LOCK ANCHOR BOLT

The anchor bolt shall be fabricated from cold drawn or hot finished seamless carbon steel mechanical tubing conforming to ASTM A519, Grade 1026 and supplied with hexagonal nuts and cut washers.

The coil wire shall be made of any suitable soft steel wire.

The finished anchor bolt shall be cleaned of rust and other foreign materials and wrapped or packaged to prevent contamination until they are installed.

The epoxy grout shall be a two-component, epoxy resin bonding system comforming to ASTM C881, Type I, Grade I and of a Class suitable for the temperature at installation.

INSTALLATION PROCEDURE for the ILLINOIS COIL-LOCK ANCHOR BOLT

1. With the coil wire in place, the bolt shall be inserted into the hole and turned clockwise to a snug fit in the hole. Nut and washer shall be placed on the bolt. The nut shall be tensioned until the steel base plates are held securely to the concrete bearing seat.
2. Epoxy grout shall be pumped through the zerk fitting with a pressure gun. Pumping shall continue until the epoxy overflows the hole around the bolt shank. After pumping is discontinued, excess epoxy shall be immediately wiped off.

ALTERNATE ANCHOR BOLTS

The Contractor may use, at his option, the capsule or the adhesive cartridge type anchor rods that have been previously tested and given a prior approval by the Department. The Contractor shall install these anchor rods in pre-drilled holes in accordance with the manufacturer's recommendations and procedures.

The capsule or the adhesive cartridge type anchor rods shall be a two part system composed of:

1. A threaded rod stud with nut and washer conforming to ASTM A307.
2. A sealed glass capsule or a sealed glass adhesive cartridge containing premeasured amounts of the adhesive chemical.

GENERAL NOTES

Holes in the masonry for anchor bolts shall be drilled through the base plates to the diameter and depth shown or in accordance with the manufacturer's recommendation after beams or girders have been erected and adjusted.

Prior to setting the bolts, the holes shall be dry and all dust and loose particles shall be removed by the use of compressed air or vacuuming.

The anchor bolts, furnished and installed and including the epoxy grout or capsules shall not be paid for separately but shall be included in the unit bid price for "Furnishing and Erecting Structural Steel".

ANCHOR BOLT DETAILS
FOR BEARINGS

F.A.I ROUTE 80 SEC.(50-2)BR
LA SALLE COUNTY
STRUCTURE NUMBER 050-0220 E.B.
050-0221 W.B.

FOR INFORMATION ONLY

MODEL: Default
FILE NAME: \\Quigg\Projects\2018\18L018 Various Structure IDOT D3 Farnsworth PTB 161-21\Work Order 14 - I-80 Roadway and other\CADD\CADD Sheets\Existing Bridge Plans\0366H21-Int-Existing Bridge Plans 0228-0229-086.dgn

QUIGG ENGINEERING INC

USER NAME = mwilson	DESIGNED -	REVISED -	
	DRAWN -	REVISED -	
PLOT SCALE = 2.0000 ' / in.	CHECKED -	REVISED -	
PLOT DATE = 10/2/2019	DATE - 10/4/2019	REVISED -	

STATE OF ILLINOIS
DEPARTMENT OF TRANSPORTATION

EXISTING STRUCTURAL PLANS
STRUCTURE NO. 050-0220/0221

SCALE: | SHEET 42 OF 42 SHEETS | STA. | TO STA.

F.A.I RTE.	SECTION	COUNTY	TOTAL SHEETS	SHEET NO.
80	50-2(HB-2)BDR(HB-1)BR(BR)BR-1	LASALLE	328	291
		CONTRACT NO. 66H21		
	ILLINOIS	FED. AID PROJECT		

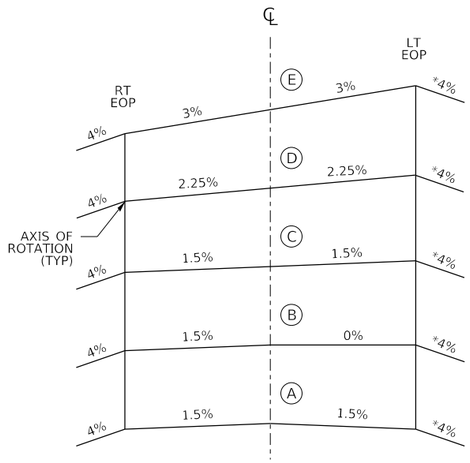

CROSS SECTIONS
SUPERELEVATION DEVELOPMENT

FOR CURVE AT 621+46.64

* MAXIMUM ROLLOVER SHALL BE 8%
FILL GUTTER PAN IF NECESSARY TO
MEET THIS MAXIMUM ROLLOVER REQUIREMENT.

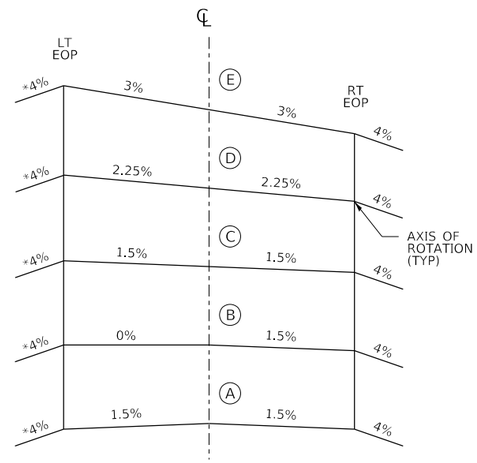

CROSS SECTIONS
SUPERELEVATION DEVELOPMENT

FOR CURVE AT STA 627+26.19 BK=
STA 627+28.88 AH

* MAXIMUM ROLLOVER SHALL BE 8%
FILL GUTTER PAN IF NECESSARY TO
MEET THIS MAXIMUM ROLLOVER REQUIREMENT.

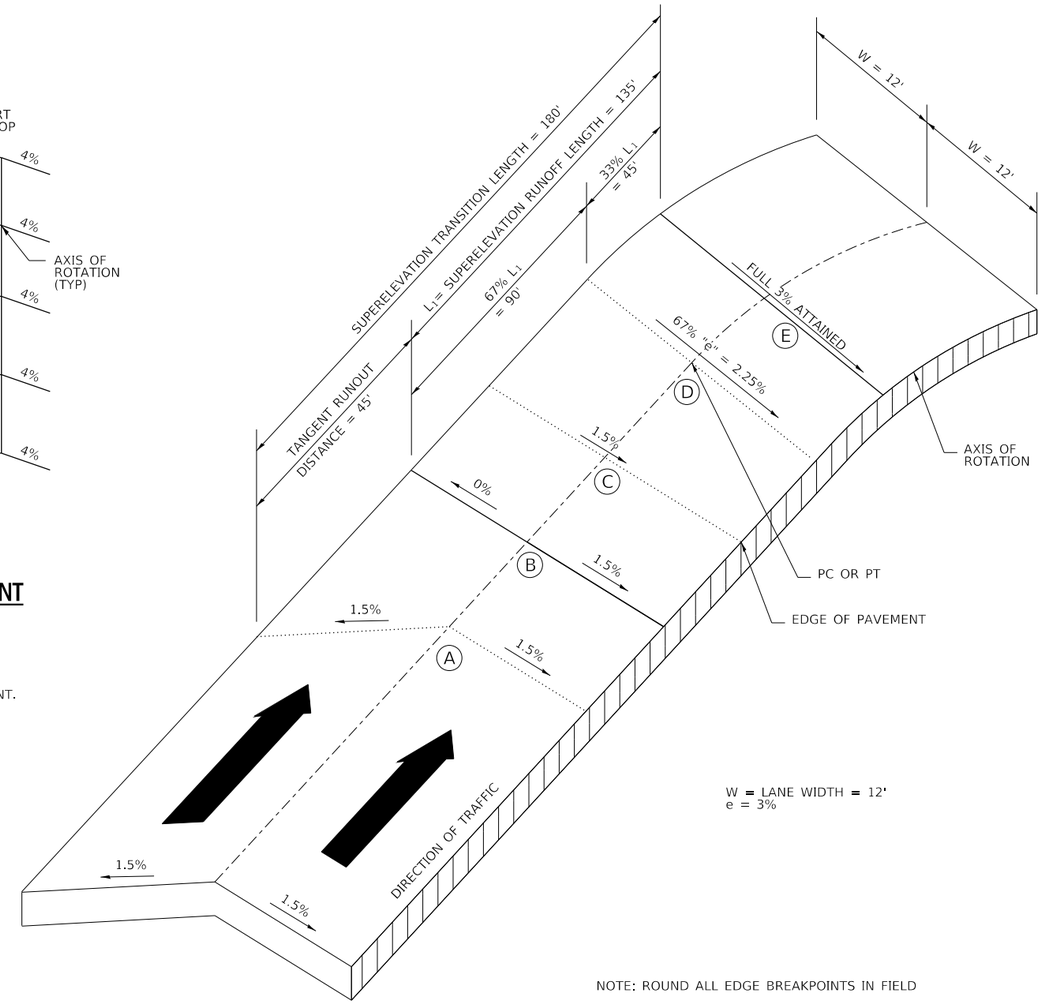

W = LANE WIDTH = 12'
e = 3%

NOTE: ROUND ALL EDGE BREAKPOINTS IN FIELD

SUPERELEVATION TRANSITION

SUPERELEVATION TRANSITION POINTS					
LOCATION	A	B	C	D	E
EB DEPARTURE - CURVE 621+46.64	622+81.64	622+36.64	621+91.64	621+46.64	621+01.64
EB APPROACH - CURVE 627+26.19 BK= 627+28.88 AH	624+25.05	624+70.05	625+15.05	625+60.05	626+05.05
WB DEPARTURE - CURVE 627+26.19 BK= 627+28.88 AH	624+98.20	625+43.20	625+88.20	626+33.20	626+78.20

* TRANSITION POINTS FOR CURVE AT 627+26.19 ADJUSTED TO PROVIDE FULL SUPERELEVATION OF THE STRUCTURES AND APPROACH PAVEMENT

MODEL: Default
FILE NAME: S:\2018\18L018 Various Structure IDOT D3 Farnsworth PTB 161-21\Work Order 14 - I-80 Roadway and other\CADD\CADD Sheets\D366H21-sht-Detail -SE Transitions.dgn

QUIGG ENGINEERING INC

USER NAME = smaxwell	DESIGNED - TNS	REVISED -	
	DRAWN - TNS	REVISED -	
PLOT SCALE = 100.0000 ' / in.	CHECKED - MCV	REVISED -	
PLOT DATE = 10/2/2019	DATE - 10/4/2019	REVISED -	

STATE OF ILLINOIS
DEPARTMENT OF TRANSPORTATION

SUPERELEVATION TRANSITION DETAIL

SCALE: SHEET 1 OF 1 SHEETS STA. TO STA.

F.A.I RTE.	SECTION	COUNTY	TOTAL SHEETS	SHEET NO.
80	50-2(HB-2)BDR(HB-1)BR(BR)BR-1	LASALLE	328	292
		CONTRACT NO. 66H21		
	ILLINOIS	FED. AID PROJECT		

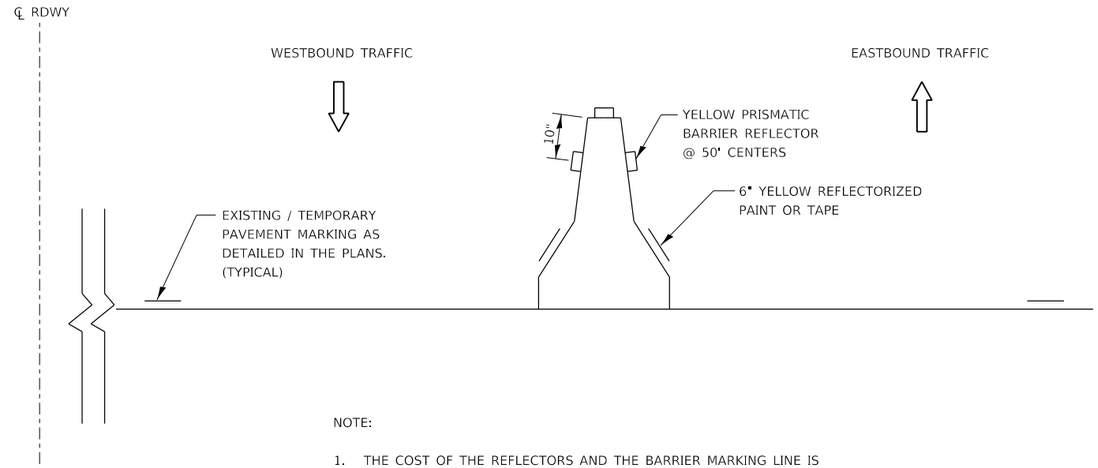

NOTE:

1. THE COST OF THE REFLECTORS AND THE BARRIER MARKING LINE IS INCLUDED IN THE COST OF THE TEMPORARY CONCRETE BARRIER.

TRAFFIC CONTROL DETAIL
FOR TEMPORARY CONCRETE BARRIER

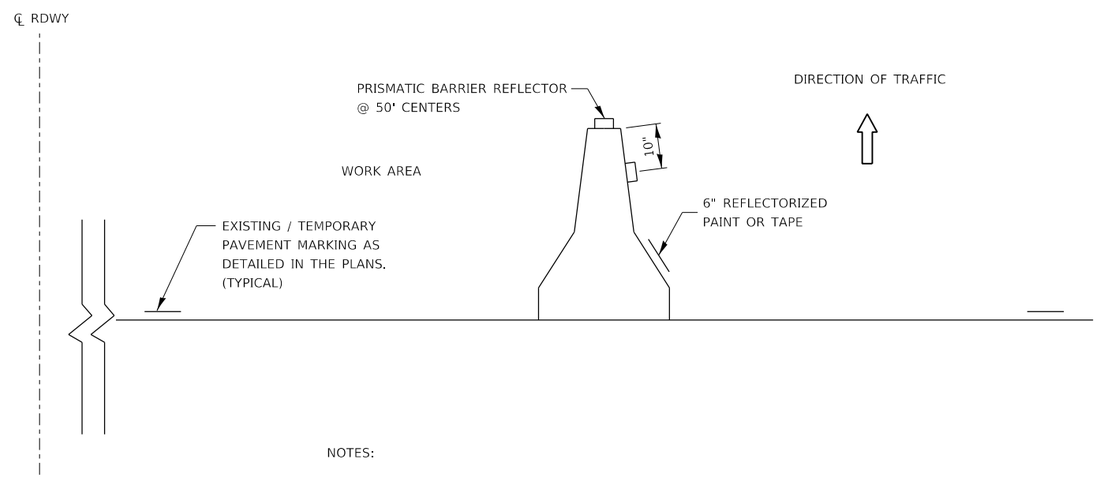

NOTES:

1. THE COLOR OF THE REFLECTORS AND BARRIER MARKING LINE WILL VARY WITH STAGING AND SHALL MATCH THE EXISTING LINE IN THE WORK AREA.

2. THE COST OF THE REFLECTORS AND THE BARRIER MARKING LINE IS INCLUDED IN THE COST OF THE TEMPORARY CONCRETE BARRIER.

TRAFFIC CONTROL DETAIL
FOR TEMPORARY CONCRETE BARRIER

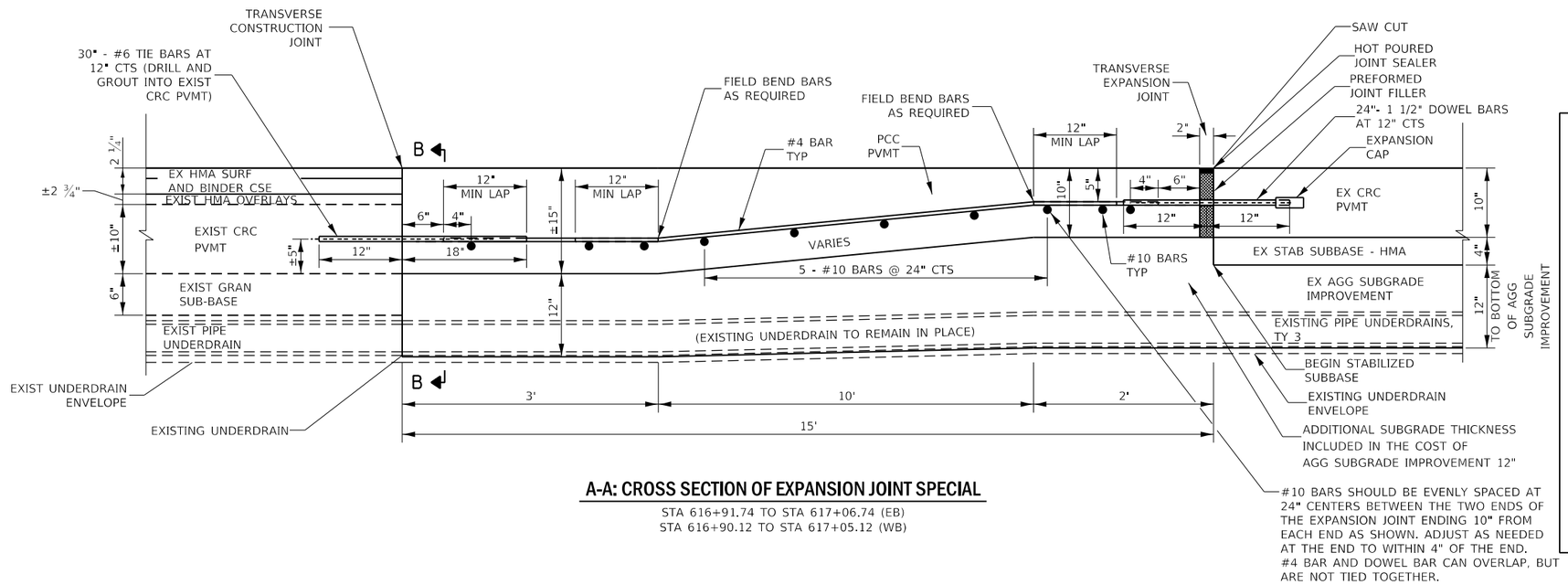

#10 BARS SHOULD BE EVENLY SPACED AT 24" CENTERS BETWEEN THE TWO ENDS OF THE EXPANSION JOINT ENDING 10" FROM EACH END AS SHOWN. ADJUST AS NEEDED AT THE END TO WITHIN 4" OF THE END. #4 BAR AND DOWEL BAR CAN OVERLAP, BUT ARE NOT TIED TOGETHER.

A-A: CROSS SECTION OF EXPANSION JOINT SPECIAL

STA 616+91.74 TO STA 617+06.74 (EB)
STA 616+90.12 TO STA 617+05.12 (WB)

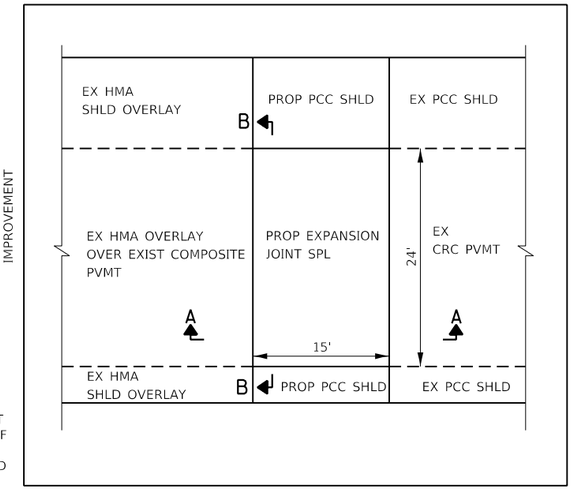

TYPICAL PLAN VIEW OF EXPANSION JOINT SPECIAL (NOT TO SCALE)

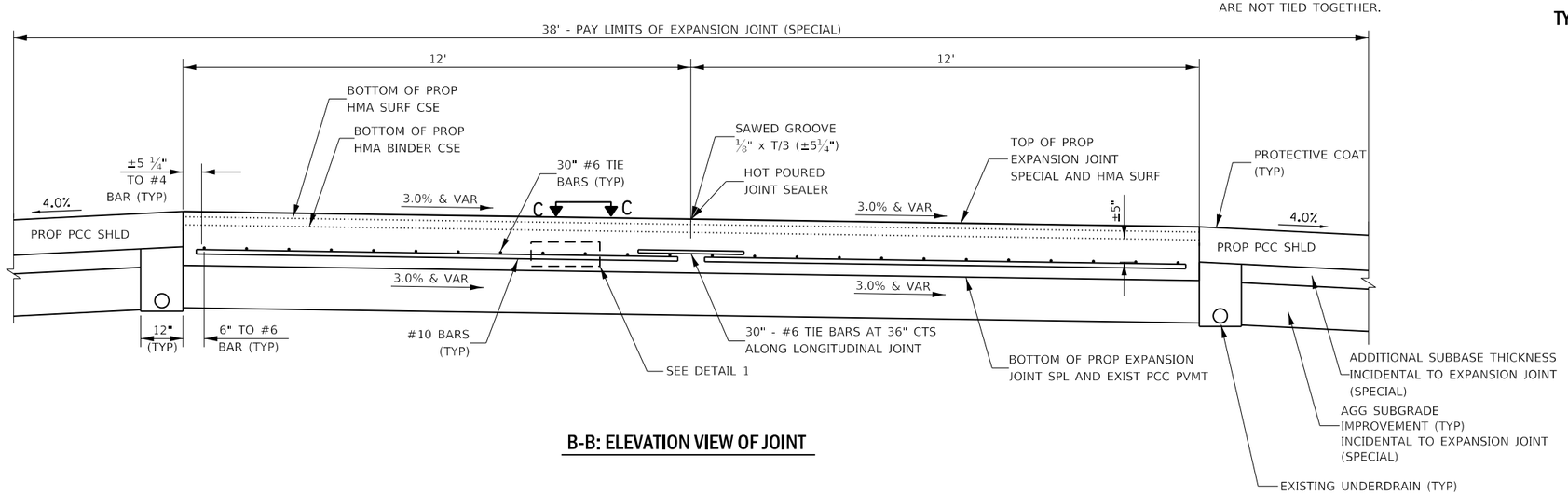

B-B: ELEVATION VIEW OF JOINT

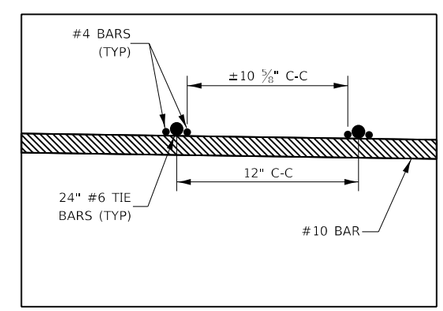

DETAIL 1: BAR SPACING DETAILS

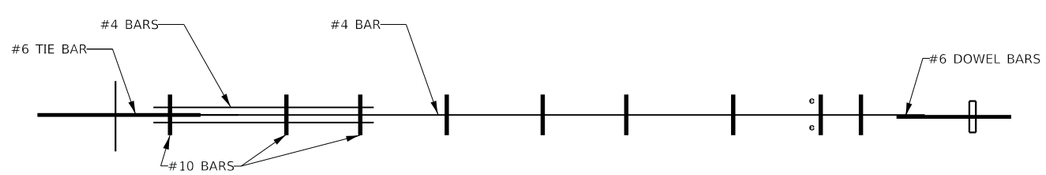

C-C: PLAN VIEW

NOTES:

1. ALL BARS SHALL BE EPOXY COATED.
2. COST OF SAW CUTTING, PAVEMENT REMOVAL, SHOULDER REMOVAL, PROPOSED AGG SUBGRADE IMPROVEMENT, SUBBASE, AND PCC CONCRETE SHOULDER SHALL NOT BE PAID FOR SEPARATELY, BUT INCLUDED IN THE COST OF EXPANSION JOINT (SPECIAL).

MODEL: Default
FILE NAME: S:\2018\18IL018 Various Structure IDOT D3 Farnsworth PTB 161-21\Work Order 14 - I-80 Roadway and other\CADD\CADD Sheets\D366H21-sht-detail-expansion_joint.dgn

QUIGG ENGINEERING INC

USER NAME = smaxwell	DESIGNED - TNS	REVISED -	
	DRAWN - TNS	REVISED -	
PLOT SCALE = 100.0000 ' / in.	CHECKED - MCV	REVISED -	
PLOT DATE = 10/2/2019	DATE - 10/4/2019	REVISED -	

STATE OF ILLINOIS
DEPARTMENT OF TRANSPORTATION

EXPANSION JOINT (SPECIAL) DETAILS

SCALE: | SHEET 1 OF 1 SHEETS | STA. TO STA.

F.A.I RTE.	SECTION	COUNTY	TOTAL SHEETS	SHEET NO.
80	50-2(HB-2)BDR(HB-1)BR(BR)BR-1	LASALLE	328	294

CONTRACT NO. 66H21

ILLINOIS | FED. AID PROJECT

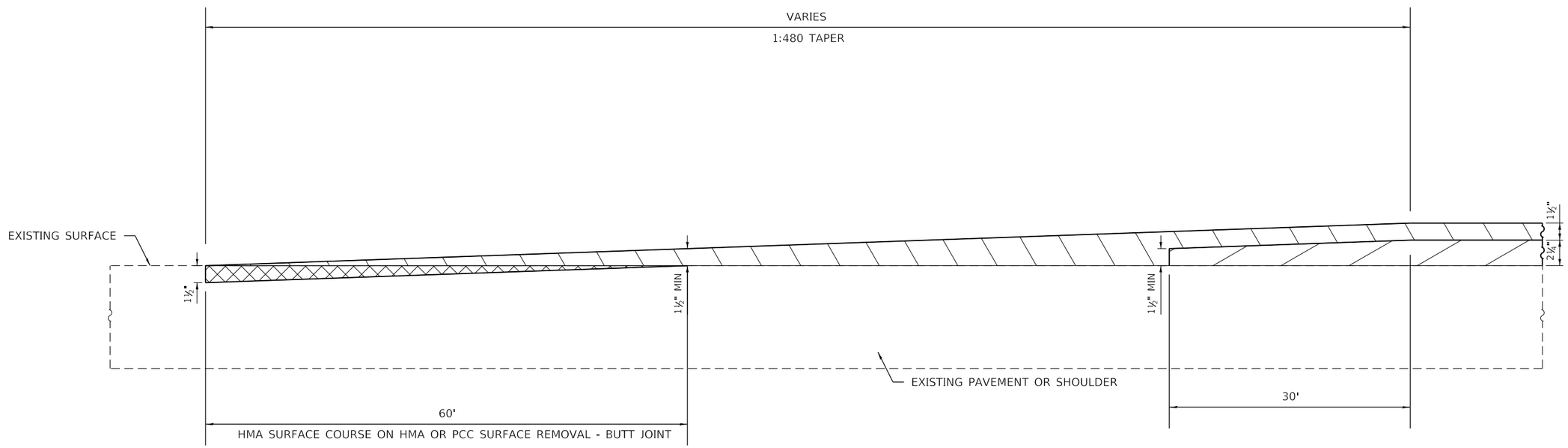

LEGEND

- HMA OR PCC SURFACE REMOVAL - BUTT JOINT
- POLYMERIZED SURFACE COURSE, MIX E, N90 *
- POLYMERIZED HOT-MIX ASPHALT BINDER COURSE, IL 19.0, N90 *

* PCC SURFACE REMOVAL - BUTT JOINT LOCATIONS WITH HMA SHOULDERS
- EB OUTSIDE SHOULDER STA 614+83.55 TO STA 615+43.76
- WB OUTSIDE SHOULDER STA 614+52.64 TO STA 615+21.63

MODEL: Default
FILE NAME: $:\0218\18L018 Various Structure IDOT D3 Farnsworth PTB 161-21\Work Order 14 - I-80 Roadway and other\CADD\CADD Sheets\0366H21-jft-detail-40609-18.dgn

QUIGG ENGINEERING INC

USER NAME = smaxwell	DESIGNED - TNS	REVISED -	
	DRAWN - TNS	REVISED -	
PLOT SCALE = 10.0000 ' / in.	CHECKED - MCV	REVISED -	
PLOT DATE = 10/2/2019	DATE - 10/4/2019	REVISED -	

STATE OF ILLINOIS
DEPARTMENT OF TRANSPORTATION

HMA / PCC SURFACE REMOVAL
BUTT JOINT

SCALE: | SHEET 1 OF 1 SHEETS | STA. TO STA.

F.A.I RTE.	SECTION	COUNTY	TOTAL SHEETS	SHEET NO.
80	50-2(HB-2)BDR(HB-1)BR(BR)BR-1	LASALLE	328	295
		CONTRACT NO. 66H21		
		ILLINOIS	FED. AID PROJECT	

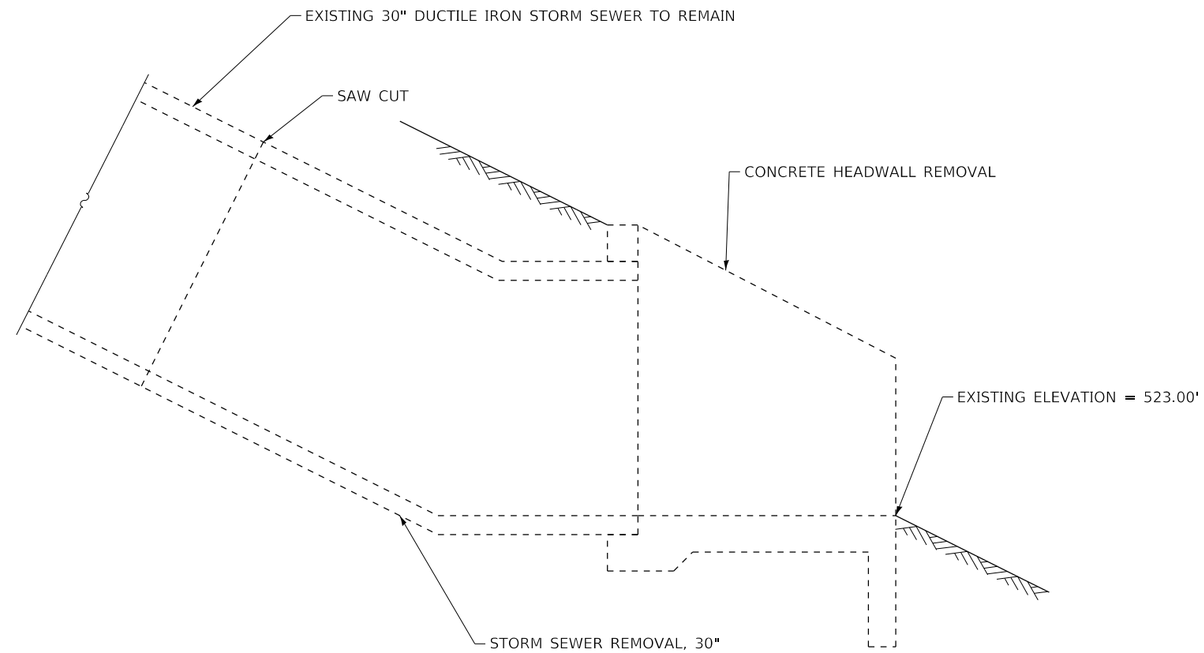

REMOVAL DETAIL

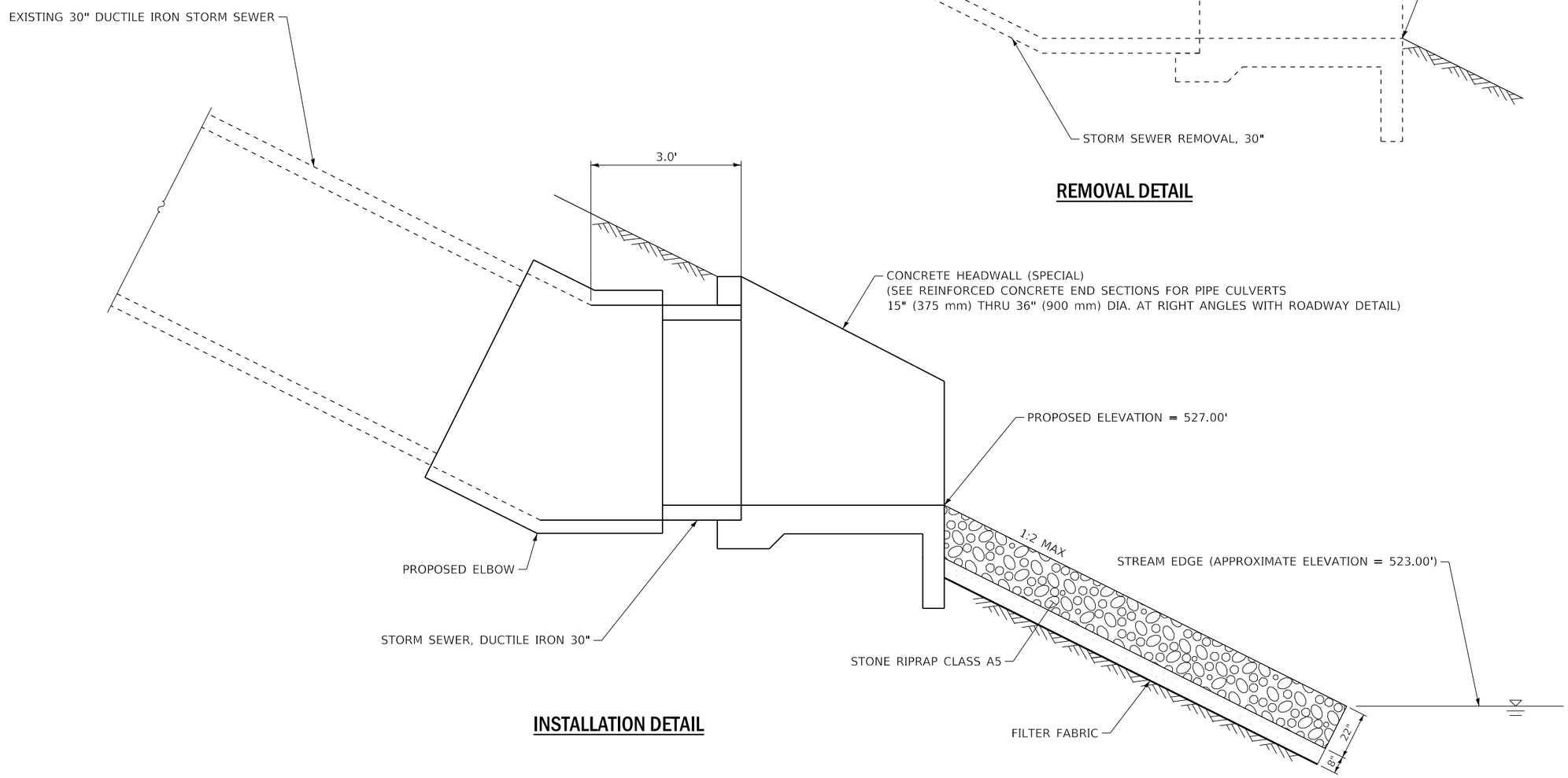

INSTALLATION DETAIL

MODEL: Default
FILE NAME: S:\2018\18L018 Various Structure IDOT D3 Farnsworth PTB 16-21\Work Order 14 - I-80 Roadway and other\CADD\CADD Sheets\D36H21-sht-detail-Headwall Replacement.dgn

QUIGG ENGINEERING INC

USER NAME = smaxwell	DESIGNED - JB	REVISED -	
	DRAWN - JB	REVISED -	
PLOT SCALE = 100.0000 ' / in.	CHECKED - MCV	REVISED -	
PLOT DATE = 10/2/2019	DATE - 10/4/2019	REVISED -	

STATE OF ILLINOIS
DEPARTMENT OF TRANSPORTATION

HEADWALL REPLACEMENT DETAIL

SCALE: SHEET 1 OF 1 SHEETS STA. TO STA.

F.A.I RTE.	SECTION	COUNTY	TOTAL SHEETS	SHEET NO.
80	50-2(HB-2)BDR(HB-1)BR(BR)BR-1	LASALLE	328	296
		CONTRACT NO. 66H21		
		ILLINOIS	FED. AID PROJECT	

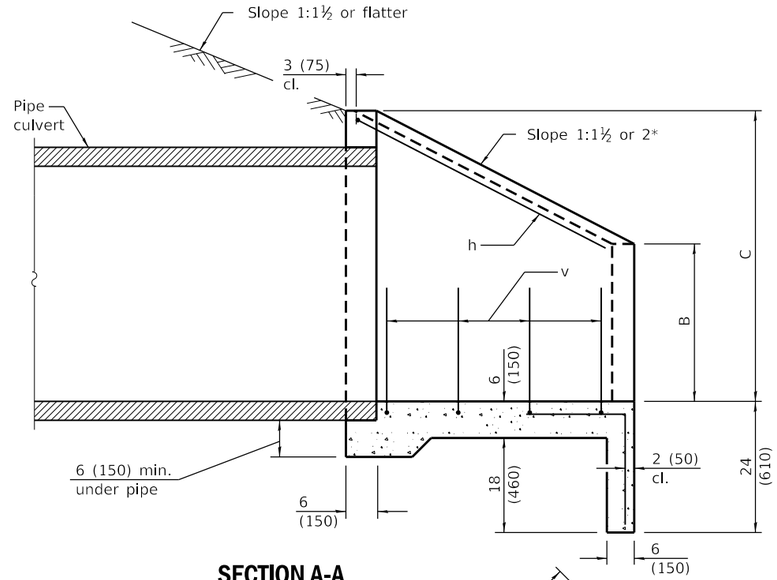

SECTION A-A

DIMENSIONS OF BARS-h to h9

Bar	a	b
h	22 (560)	29½ (750)
h_1	22 (560)	38½ (980)
h_2	25 (640)	29½ (750)
h_3	25 (640)	38½ (980)
h_4	33 (840)	39 (990)
h_5	33 (840)	4'-1½" (1.26 m)
h_6	39 (990)	3'-10½" (1.18 m)
h_7	39 (990)	4'-10½" (1.50 m)
h_8	3'-11" (1.19 m)	4'-8" (1.42 m)
h_9	3'-11" (1.19 m)	5'-9½" (1.77 m)

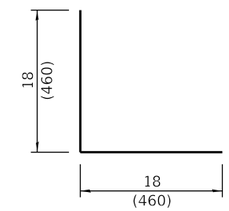

BAR v

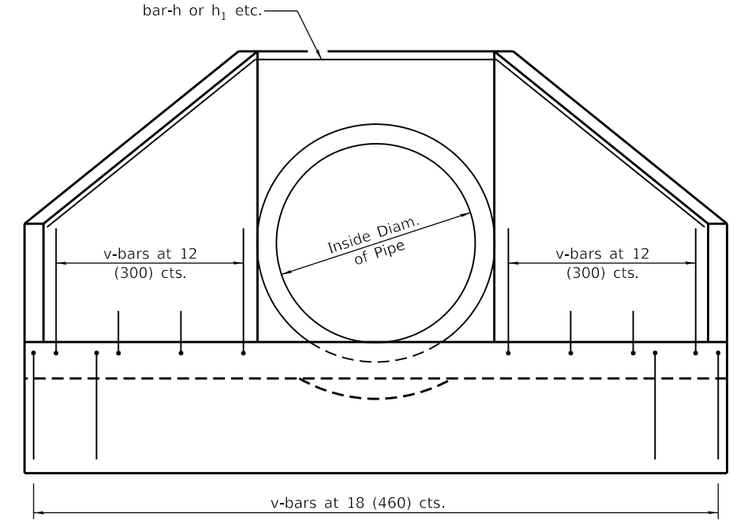

END VIEW

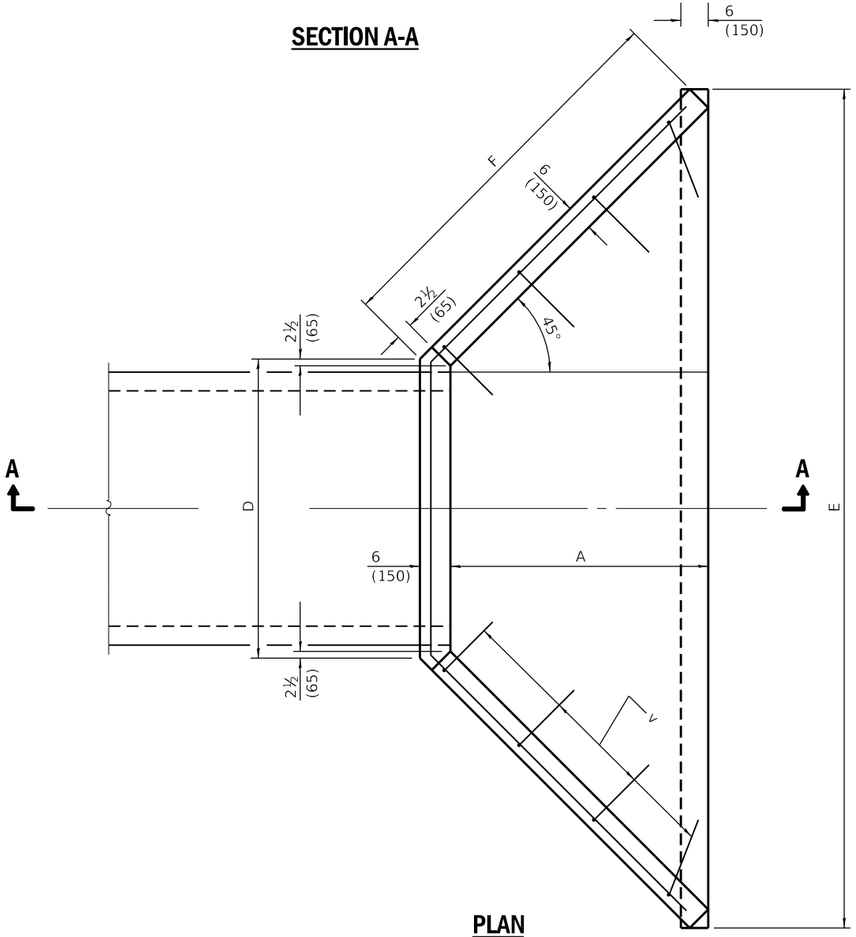

PLAN

DIMENSIONS AND QUANTITIES

Design No.	Nominal Inside Dia. of Pipe	Slope of Wing Walls	Dimensions A	B	C	D	E	F	Concrete 2 End Secs. cu. yds. (m^3)	Reinforcement Bars - No. 4 (No. 13) h-Bars Bar	h-Bars Length	v-Bars No.	Total Wt. 2 End Secs. lbs. (kg)
D15-1½ (D375-1½)	15 (375)	1:1½	19 (485)	10 (260)	23 (590)	24 (610)	5'-5½" (1.67 m)	29½ (750)	0.9 (0.7)	h	6'-9" (2.06 m)	16	40 (18.1)
D15-2 (D375-2)	15 (375)	1:2	26 (660)	10 (260)	23 (590)	24 (610)	6'-7½" (2.02 m)	3'-3¼" (1 m)	1.2 (0.9)	h_1	8'-3" (2.52 m)	22	60 (27.2)
D18-1½ (D450-1½)	18 (450)	1:1½	19 (485)	13 (330)	26 (660)	27 (690)	5'-8½" (1.75 m)	29½ (750)	1.3 (1.0)	h_2	7'-0" (2.14 m)	16	40 (18.1)
D18-2 (D450-2)	18 (450)	1:2	26 (660)	13 (330)	26 (660)	27 (690)	6'-10½" (2.11 m)	3'-3¼" (1 m)	1.3 (1.0)	h_3	8'-6" (2.6 m)	22	60 (27.2)
D24-1½ (D600-1½)	24 (600)	1:1½	25 (640)	16 (410)	33 (840)	35 (890)	7'-4½" (2.26 m)	38 (970)	1.5 (1.1)	h_4	9'-3" (2.82 m)	22	60 (27.2)
D24-2 (D600-2)	24 (600)	1:2	34 (865)	16 (410)	33 (840)	35 (890)	8'-10½" (2.72 m)	4'-2½" (1.29 m)	2.0 (1.5)	h_5	11'-0" (3.24 m)	28	70 (31.8)
D30-1½ (D750-1½)	30 (750)	1:1½	30 (770)	19 (480)	39 (990)	3'-5" (1.05 m)	8'-8½" (2.68 m)	3'-9" (1.15 m)	2.0 (1.5)	h_6	11'-0" (3.39 m)	28	70 (31.8)
D30-2 (D750-2)	30 (750)	1:2	3'-4" (1.01 m)	19 (480)	39 (990)	3'-5" (1.05 m)	10'-4½" (3.17 m)	4'-11" (1.5 m)	2.6 (2.0)	h_7	13'-0" (3.99 m)	34	80 (36.3)
D36-1½ (D900-1½)	36 (900)	1:1½	36 (915)	22 (560)	3'-10" (1.17 m)	4'-1" (1.25 m)	10'-4½" (3.17 m)	4'-5½" (1.36 m)	2.6 (2.0)	h_8	13'-3" (4.03 m)	30	80 (36.3)
D36-2 (D900-2)	36 (900)	1:2	4'-0" (1.22 m)	22 (560)	3'-10" (1.17 m)	4'-1" (1.25 m)	12'-4½" (3.78 m)	5'-10½" (1.79 m)	3.5 (2.7)	h_9	15'-6" (4.73 m)	40	100 (45.4)

* If embankment slope above headwall is flatter than 1:2, provide wings for 1:2 slope.

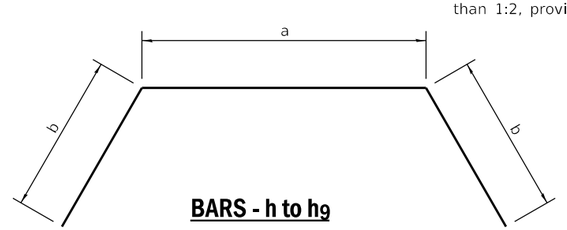

BARS - h to h9

Bend in field
one required in each headwall

GENERAL NOTES

All slope ratios are expressed as units of vertical displacement to units of horizontal displacement (V:H).

All dimensions are in inches (millimeters) unless otherwise shown.

MODEL: Default
FILE NAME: S:\2018\18L018 Various Structure IDOT D3 Farnsworth PTB 161-21\Work Order 14 - I-80 Roadway and other\CADD\CADD Sheets\D366H21-sht-detail-542-14.dgn

USER NAME = smaxwell	DESIGNED -	REVISED -	
	DRAWN -	REVISED -	
PLOT SCALE = 100.0000 ' / in.	CHECKED -	REVISED -	
PLOT DATE = 10/2/2019	DATE - 10/4/2019	REVISED -	

STATE OF ILLINOIS
DEPARTMENT OF TRANSPORTATION

REINFORCED CONCRETE END SECTIONS FOR PIPE CULVERTS
15" (375 mm) THRU 36" (900 mm) DIA. AT RIGHT ANGLES WITH ROADWAY

SCALE: | SHEET 1 OF 1 SHEETS | STA. TO STA.

F.A.I RTE.	SECTION	COUNTY	TOTAL SHEETS	SHEET NO.
80	50-2(HB-2)BDR(HB-1)BR(BR)BR-1	LASALLE	328	297

CONTRACT NO. 66H21
ILLINOIS | FED. AID PROJECT

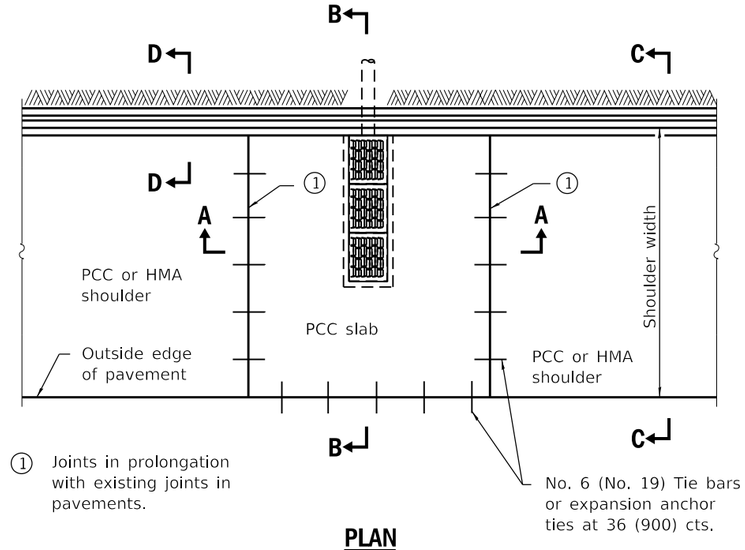

PLAN

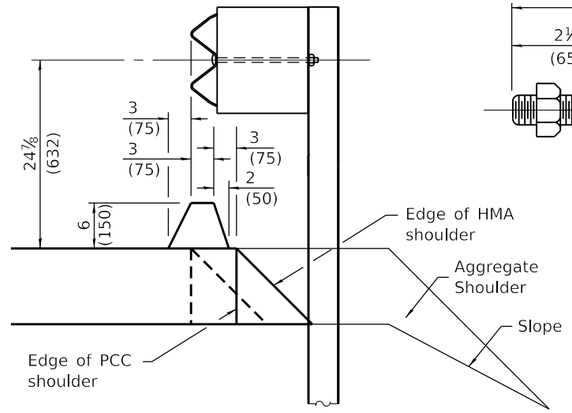

DETAIL B

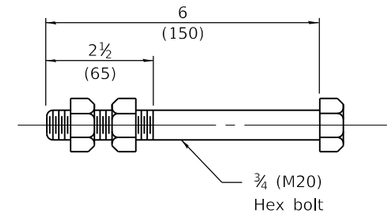

ANCHOR BOLT

(Used to tie pipe to concrete collar)

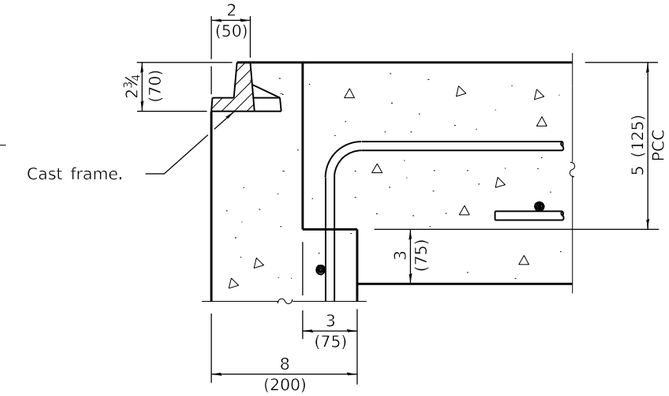

DETAIL A

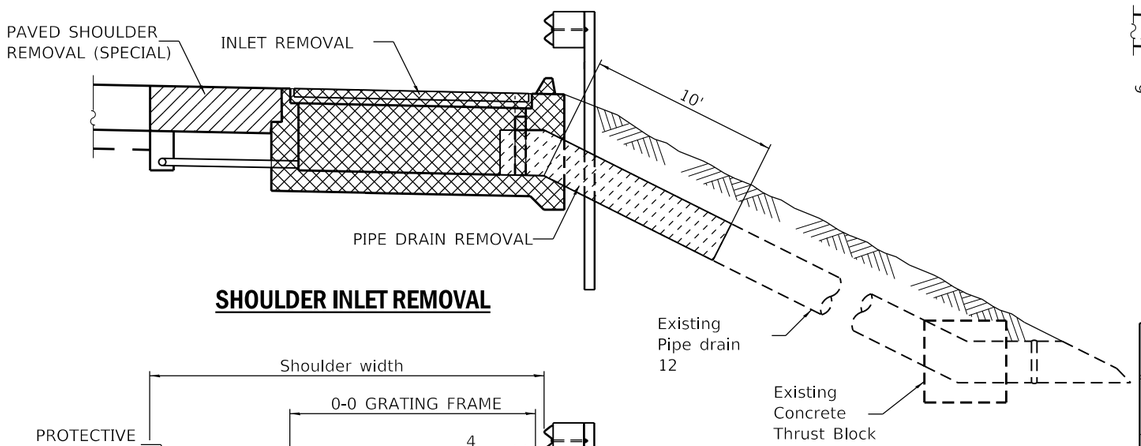

SHOULDER INLET REMOVAL

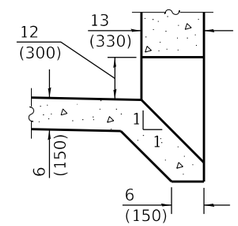

BOX OUTLET WHEN PRECAST

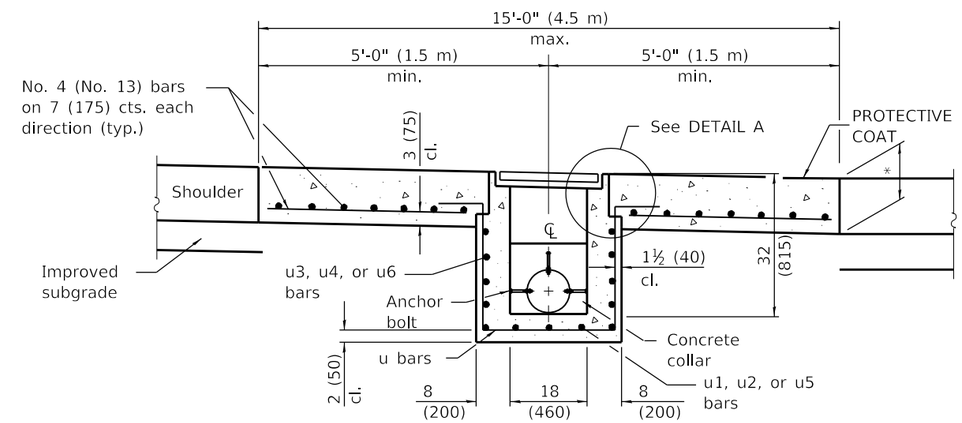

SEC. A-A

* PCC slab thickness same as adjacent shoulder.

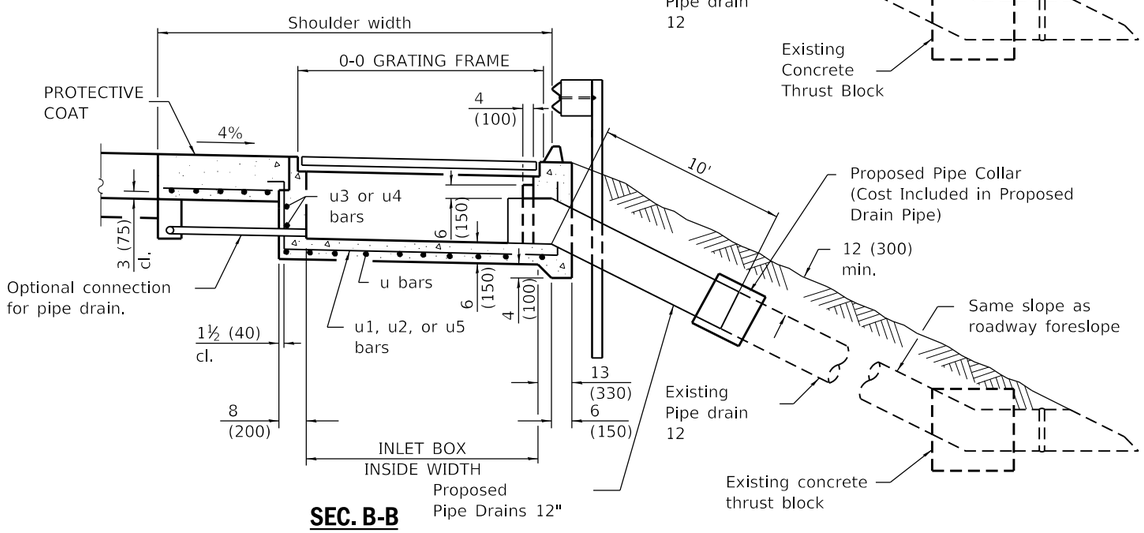

SEC. B-B

INLET TYPE	SHOULDER WIDTH	O-O GRATING FRAME	INLET BOX INSIDE WIDTH	INLET BOX INSIDE LENGTH
Type E	8' (2.4 m)	4'-4" (1.325 m)	3'-11" (1.195 m)	18 (460)
Type F	10' (3.0 m)	6'-5" (1.960 m)	6'-0" (1.830 m)	18 (460)
Type G	5' (1.5 m) or less	27 (690)	22 (560)	18 (460)

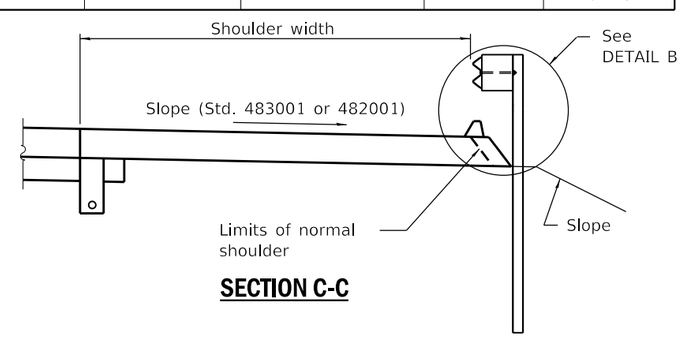

SECTION C-C

GENERAL NOTES

See Standard 420001 for joint details not shown.

See Standard 630001 for details of guardrail not shown.

All exposed edges of the inlet, except the upper perimeter, shall be beveled ¾ (20).

For placement of drainage elements on existing construction with existing rigid pavement, substitute expansion anchor ties for tie bars. For nonrigid pavements or monolithic construction of PCC slab and shoulder, omit tie bars.

All dimensions are in inches (millimeters) unless otherwise shown.

MODEL: Default
FILE NAME: S:\2018\18L018 Various Structure IDOT D3 Farnsworth PTB 161-21\Work Order 14 - I-80 Roadway and other\CADD\CADD Sheets\D366H21-sht-detail-661000-1-08.dgn

QUIGG ENGINEERING INC

USER NAME = smaxwell	DESIGNED - TNS	REVISED -	
	DRAWN - TNS	REVISED -	
PLOT SCALE = 0:2.0000 ':" / in.	CHECKED - MCV	REVISED -	
PLOT DATE = 10/2/2019	DATE - 10/4/2019	REVISED -	

STATE OF ILLINOIS
DEPARTMENT OF TRANSPORTATION

SHOULDER INLET WITH CURB DETAIL

SCALE: | SHEET 1 OF 2 SHEETS | STA. TO STA.

F.A.I RTE.	SECTION	COUNTY	TOTAL SHEETS	SHEET NO.
80	50-2(HB-2)BDR(HB-1)BR(BR)BR-1	LASALLE	328	298

CONTRACT NO. 66H21

ILLINOIS | FED. AID PROJECT

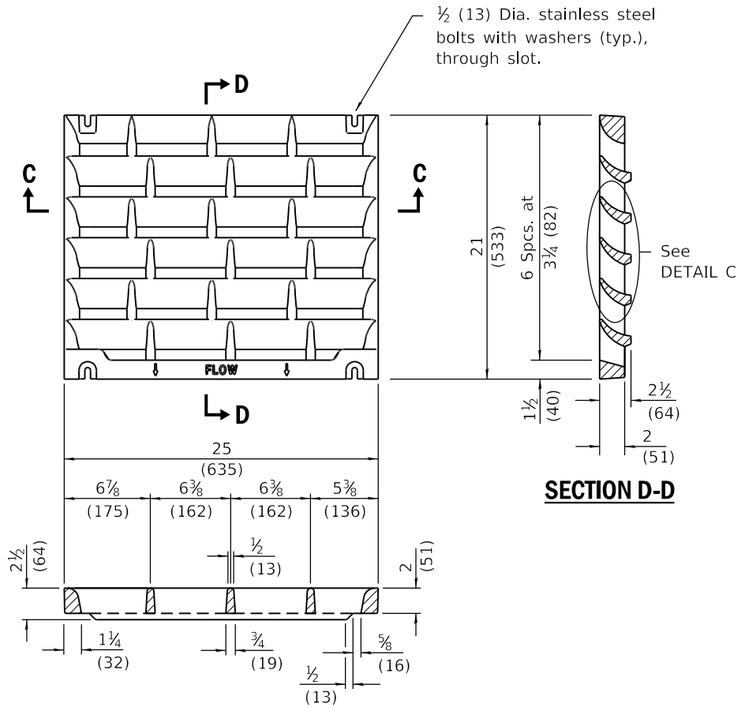

SECTION D-D

SECTION C-C

DETAIL OF CAST GRATE

Type G requires 1 grate
Type E requires 2 grates
Type F requires 3 grates

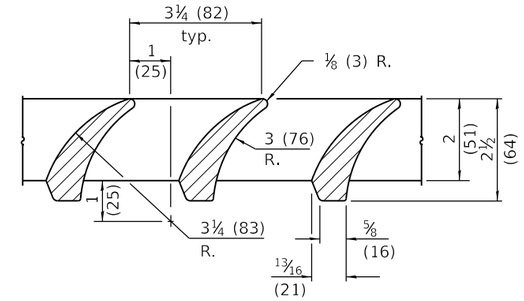

DETAIL C

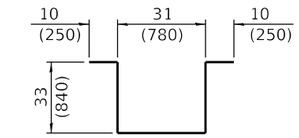

BAR u

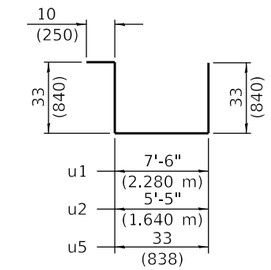

BARS u1, u2, & u5

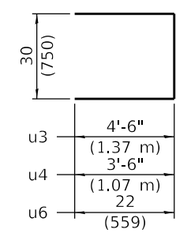

BARS u3, u4 & u6

INLET BOX

REQUIRED MATERIAL			
TYPE F			
Bar	Qty.	Size	Length
u	8	No. 4 (No.13)	9'-9" (2.96 m)
u1	3	No. 4 (No.13)	13'-10" (4.21 m)
u3	6	No. 4 (No.13)	11'-6" (3.49 m)
Concrete		cu. yds. (m^3)	1.7 (1.3)
Reinf. bars		lbs. (kg)	126 (57.2)
Grating		sq. ft. (m^2)	10.9 (1.02)
TYPE E			
Bar	Qty.	Size	Length
u	6	No. 4 (No.13)	9'-9" (2.96 m)
u2	3	No. 4 (No.13)	11'-9" (3.57 m)
u4	6	No. 4 (No.13)	9'-6" (2.89 m)
Concrete		cu. yds. (m^3)	1.3 (1.0)
Reinf. bars		lbs. (kg)	101 (45.8)
Grating		sq. ft. (m^2)	7.3 (0.68)
TYPE G			
Bar	Qty.	Size	Length
u	4	No. 4 (No.13)	9'-9" (2.69 m)
u5	3	No. 4 (No.13)	9'-1" (2.78 m)
u6	4	No. 4 (No.13)	6'-2" (1.87 m)
Concrete		cu. yds. (m^3)	0.5 (0.4)
Reinf. bars		lbs. (kg)	55 (25.0)
Grating		sq. ft. (m^2)	3.6 (0.34)

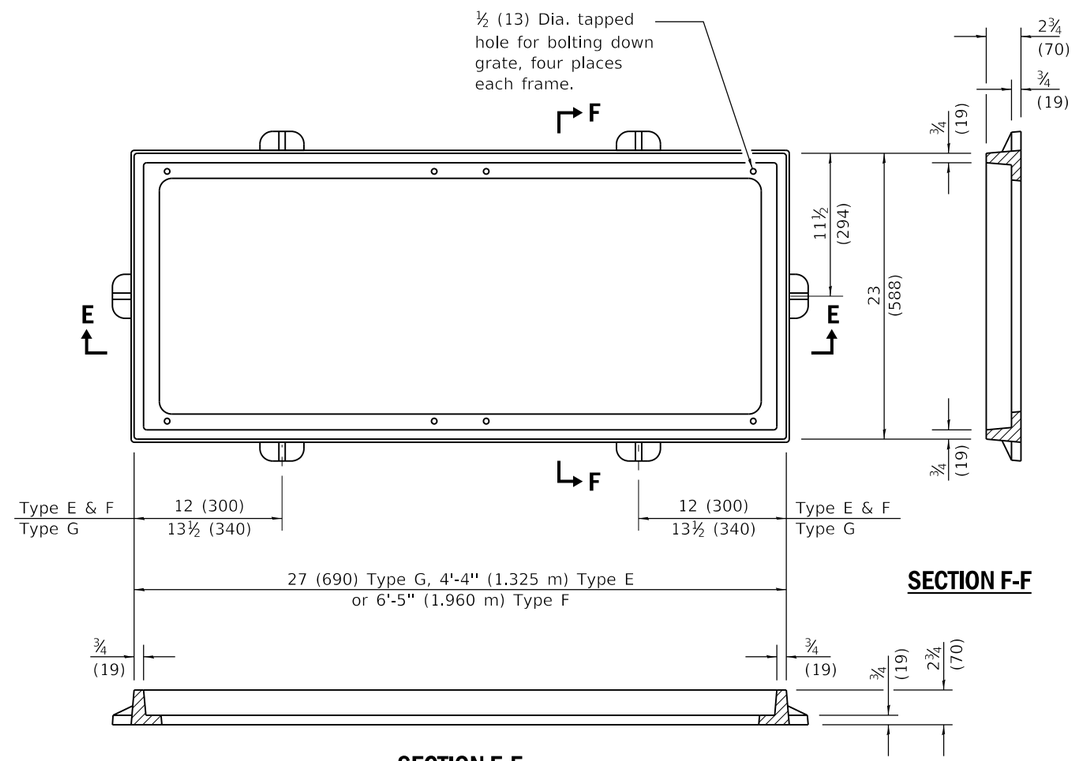

SECTION F-F

SECTION E-E

DETAIL OF CAST FRAME

(Type E shown)

MODEL: Default
FILE NAME: S:\2018\18L018 Various Structure IDOT D3 Farnsworth PTB 161-21\Work Order 14 - I-80 Roadway and other\CADD\CADD Sheets\D366H21-sht-detail-61000-I-08.dgn

QUIGG ENGINEERING INC

USER NAME = smaxwell	DESIGNED - TNS	REVISED -	
	DRAWN - TNS	REVISED -	
PLOT SCALE = 0:2.0000 ':" / in.	CHECKED - MCV	REVISED -	
PLOT DATE = 10/2/2019	DATE - 10/4/2019	REVISED -	

STATE OF ILLINOIS
DEPARTMENT OF TRANSPORTATION

SHOULDER INLET WITH CURB
DETAIL

SCALE: | SHEET 2 OF 2 SHEETS | STA. | TO STA.

F.A.I RTE.	SECTION	COUNTY	TOTAL SHEETS	SHEET NO.
80	50-2(HB-2)BDR(HB-1)BR(BR)BR-1	LASALLE	328	299

CONTRACT NO. 66H21

ILLINOIS | FED. AID PROJECT

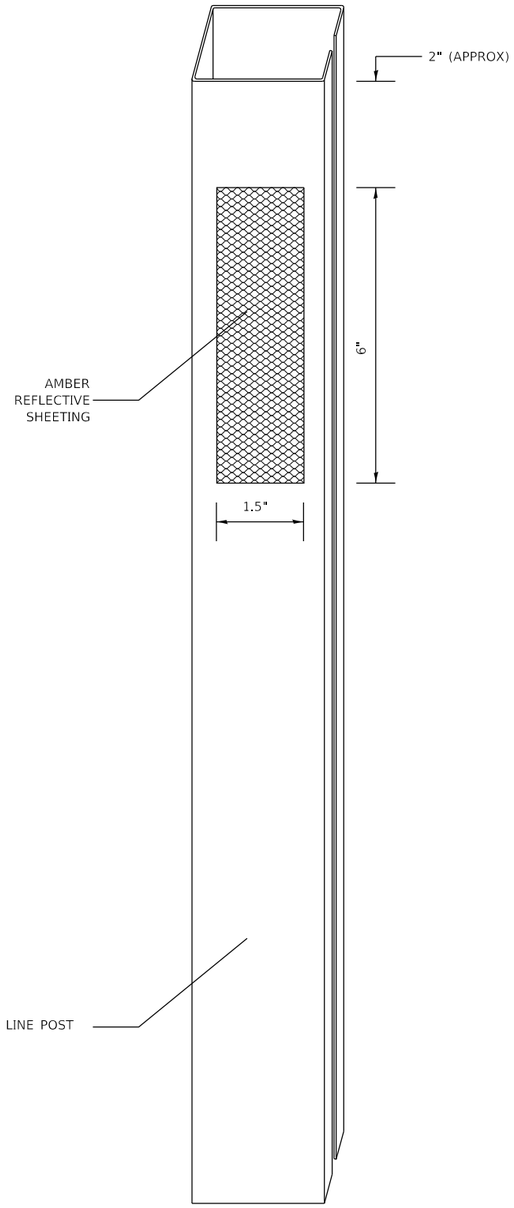

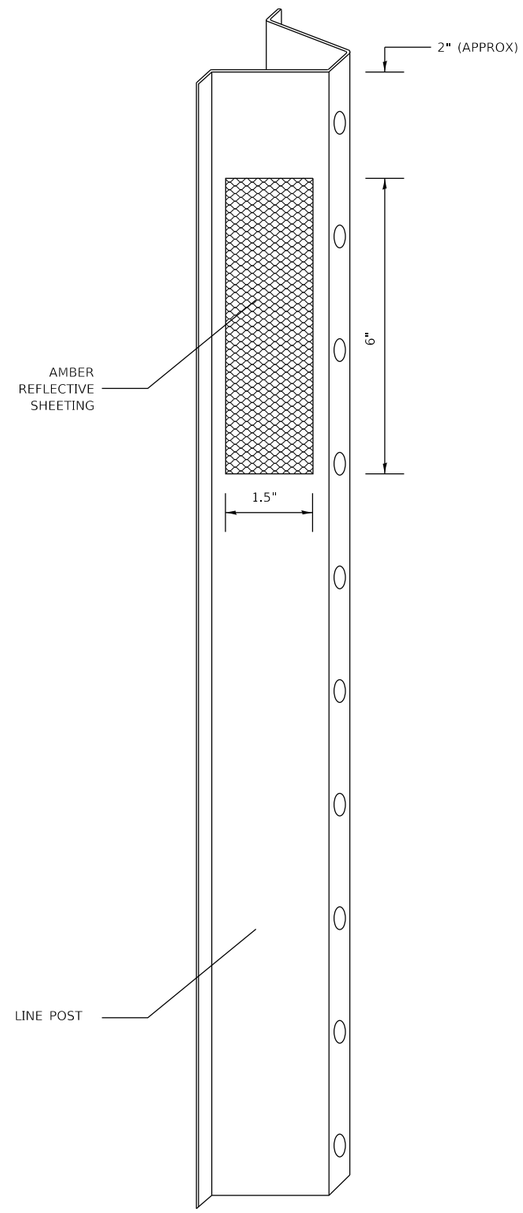

NOTES:

THE REFLECTIVE SHEETING SHALL BE INSTALLED AS DESCRIBED IN THE PLANS AND SPECIAL PROVISIONS.

THE REFLECTIVE SHEETING SHALL BE FACING ONCOMING TRAFFIC.

MODEL: Default
FILE NAME: pw:\\planroom.dot.illinois.gov:PWIDOT\Documents\IDOT Offices\District 3\Projects\D366H21\CADData\CADsheets\Consultant Sheets\D366H21-sht-detail-cable guard marker.dgn

USER NAME = corcoranlm	DESIGNED -	REVISED -	
	DRAWN -	REVISED -	
PLOT SCALE = 100.0000 ' / in.	CHECKED -	REVISED -	
PLOT DATE = 10/18/2019	DATE - 10/4/2019	REVISED -	

STATE OF ILLINOIS
DEPARTMENT OF TRANSPORTATION

HIGH TENSION CABLE MEDIAN BARRIER REFLECTORS
DETAIL

SCALE: | SHEET 1 OF 1 SHEETS | STA. TO STA.

F.A.I RTE.	SECTION	COUNTY	TOTAL SHEETS	SHEET NO.
80	50-2(HB-2)BDR(HB-1)BR(BR)BR-1	LASALLE	328	300

CONTRACT NO. 66H21

ILLINOIS | FED. AID PROJECT