STATE OF ILLINOIS
DEPARTMENT OF TRANSPORTATION

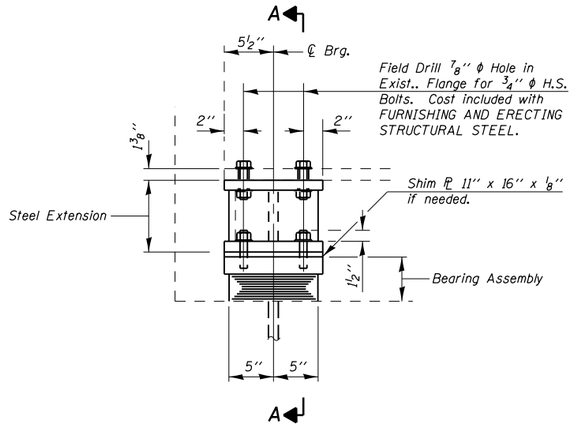

ELEVATION AT ABUT.

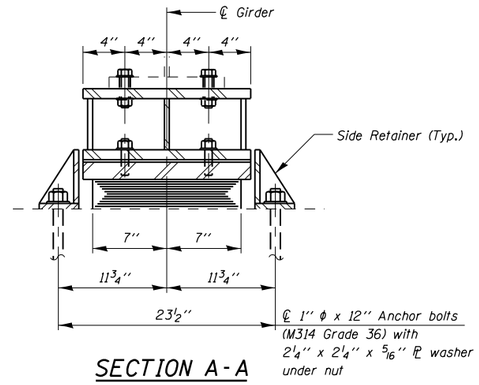

SECTION A-A

TYPE I ELASTOMERIC EXP. BRG.

Notes:

Anchor bolts shall be ASTM F1554 all-thread (or an Engineer-approved alternate material) of the grade(s) and diameter(s) specified. The corresponding specified grade of ASTM A307 anchor bolts may be used in lieu of ASTM F1554.

Drilled and set anchor bolts shall be installed according to Article 521.06 of the Standard Specifications.

Side retainers and other steel members required for the elastomeric bearing assembly shall be included in the cost of Elastomeric Bearing Assembly, Type I.

The minimum jack capacity requred is 60 Tons.

Existing cross frame removal and reinstallation may be required to facilitate drilling holes, cost to be included with JACK AND REMOVE EXISTING BEARINGS.

Prior to ordering any material, the Contractor shall verify in the field all bearing height and shim thickness dimensions.

Two ⅛ in. adjusting shims shall be provided for each bearing in addition to all other plates or shims and placed as shown on bearing details.

New steel extensions, connection bolts, Fill ℙ's and Shim ℙ's are included in FURNISHING AND ERECTING STRUCTURAL STEEL.

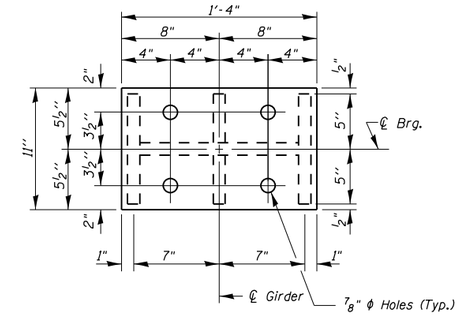

PLAN-TOP & BOTTOM PLATE

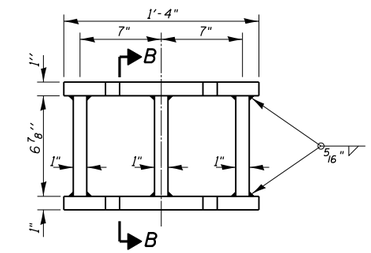

STEEL EXTENSION DETAIL

Girder Reactions

R DL	35 Kips
R SDL	8 Kips
R LL	52 Kips
R Imp.	12 Kips
R (Total)	107 Kips

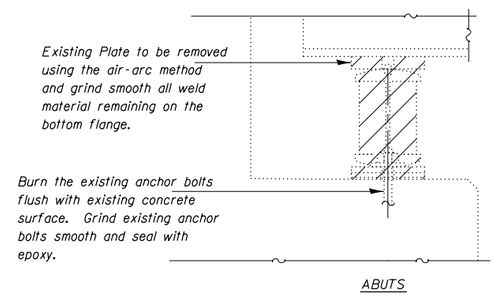

EXISTING BEARING REMOVAL DETAIL

Cost is included with Jack and Remove Existing Bearings

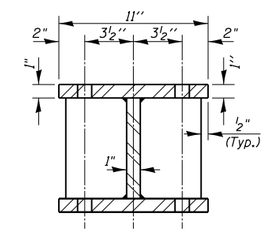

SECTION B-B

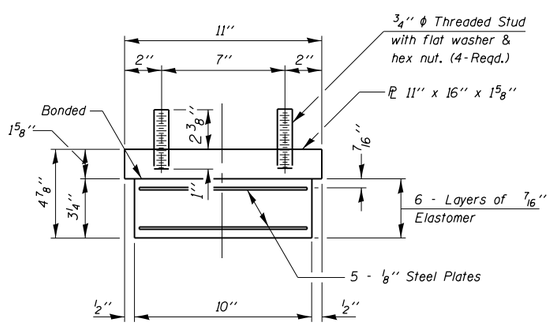

BEARING ASSEMBLY

Note:
Shim plates shall not be placed under Bearing Assembly.

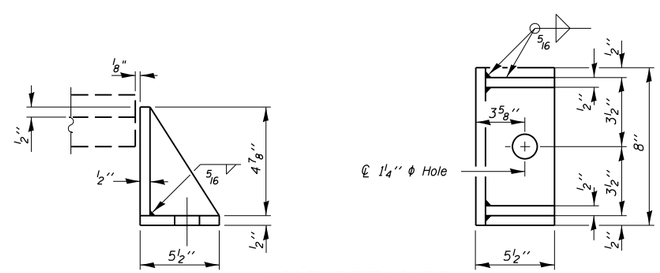

SIDE RETAINER

Equivalent rolled angle with stiffeners will be allowed in lieu of welded plates.

BILL OF MATERIAL

Item	Unit	Total
Elastomeric Bearing Assembly Type I	Each	24
Anchor Bolts, 1"	Each	48
Jack and Remove Existing Bearings	Each	24

BEARING DETAILS
STRUCTURE NO. 064-0029

FILE NAME = c:\pw_work\pwidot\adamsam\d0253203\064-0029-sht.dgn	USER NAME = $USER$	DESIGNED -	REVISED -	STATE OF ILLINOIS DEPARTMENT OF TRANSPORTATION	BEARING DETAILS	F.A.I. RTE.	SECTION	COUNTY	TOTAL SHEETS / SHEET NO.
	PLOT SCALE = 8.0000 ' / in.	DRAWN -	REVISED -			24	•	MASSAC	16 / 11
	PLOT DATE = 10/15/2013	CHECKED -	REVISED -					CONTRACT NO. 78249	
$MODELNAME$		DATE -	REVISED -		SCALE: SHEET OF SHEETS STA. TO STA.		ILLINOIS	FED. AID PROJECT	

• D9 CM BRIDGE REPAIR 2014-1