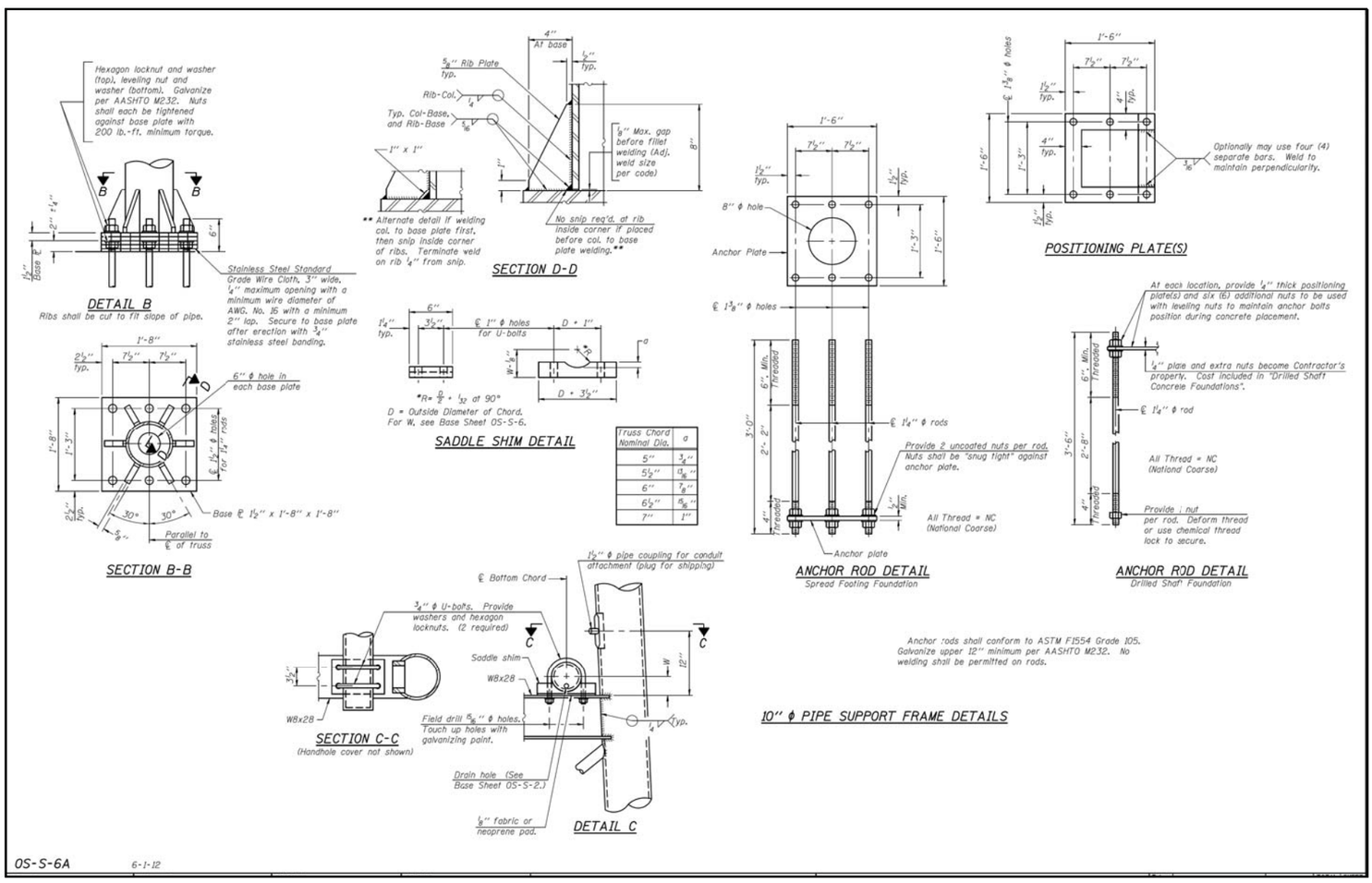

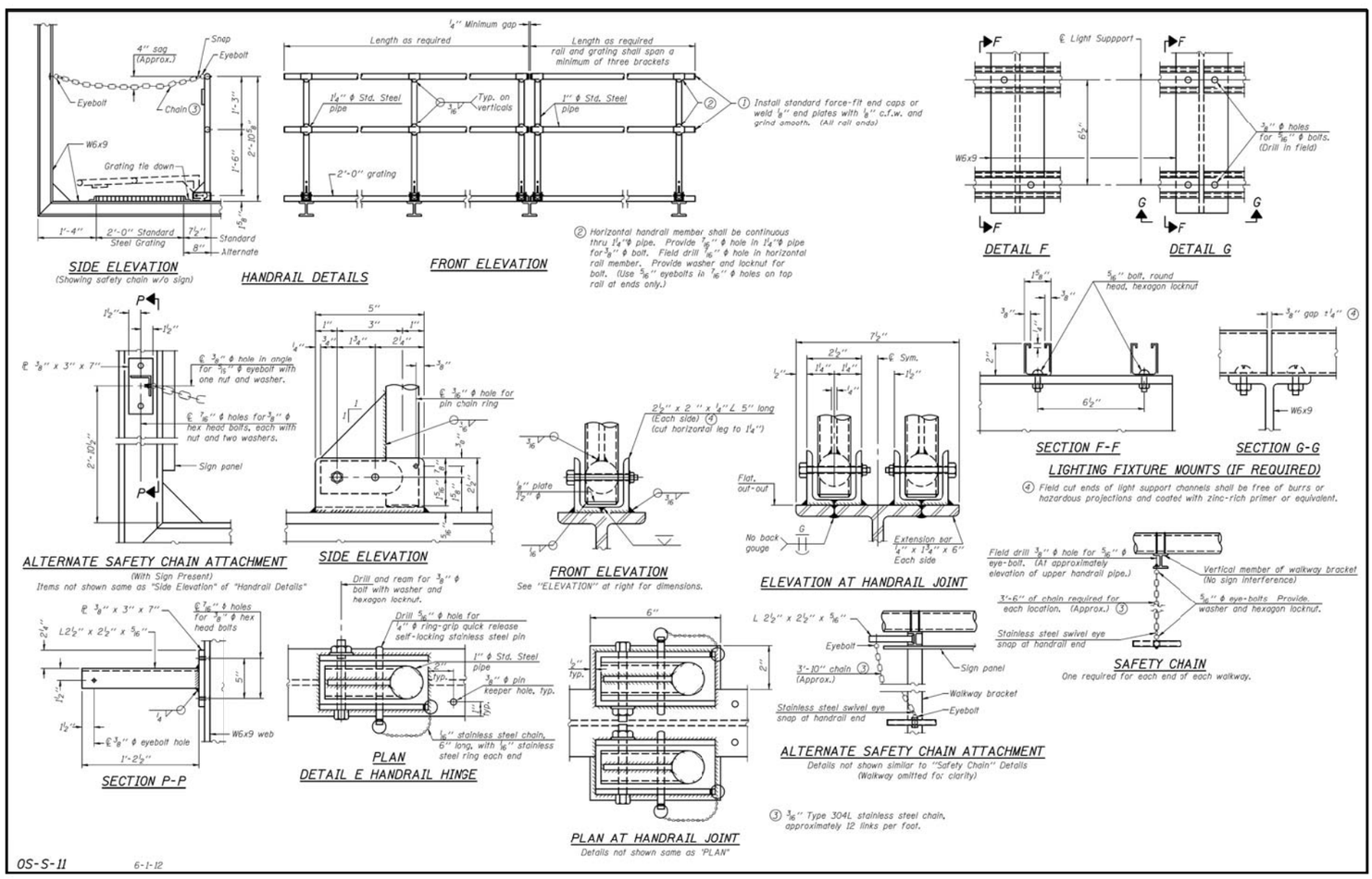

OVERHEAD SIGN STRUCTURE DETAILS – STEEL

FILE NAME = H:\6513 IDOT D8 Ver\6513.09 WO 9 I-2550\Overlay\Revised\CADD\Sheets\D876F10-sht-misc.dgn
USER NAME = kschwier.john
PLOT SCALE = 10.0000 ' / in.
PLOT DATE = 9/24/2013
DESIGNED - KJS
DRAWN - KOJ/KJS
CHECKED - SAR
DATE - 7/19/13
REVISED -
REVISED -
REVISED -
REVISED -

STATE OF ILLINOIS
DEPARTMENT OF TRANSPORTATION

OVERHEAD SIGN STRUCTURE REPAIR DETAILS

SCALE: SHEET 3 OF 3 SHEETS STA. TO STA.

F.A.I. RTE.	SECTION	COUNTY	TOTAL SHEETS	SHEET NO.
255	60-(8,9)RS-1	MADISON	206	107

CONTRACT NO. 76F10

ILLINOIS FED. AID PROJECT