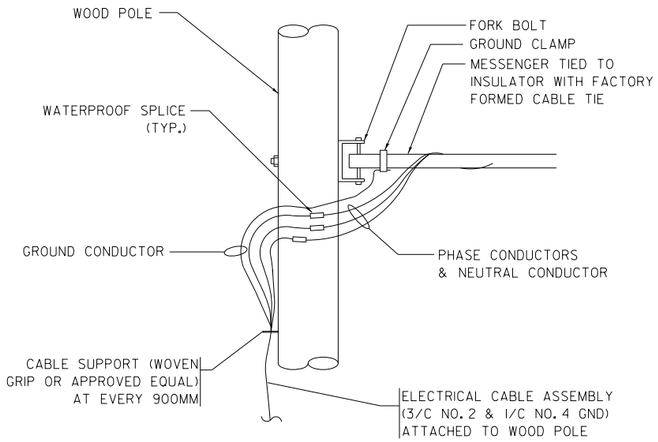

AERIAL CABLE CONNECTION DETAIL

N.T.S.

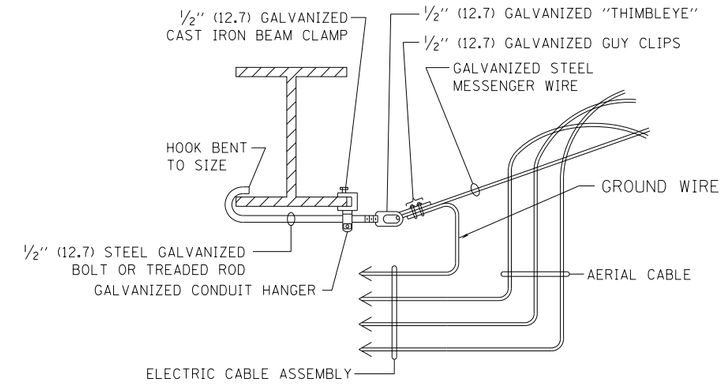

AERIAL CABLE ATTACHED TO STRUCTURE

NOT TO SCALE

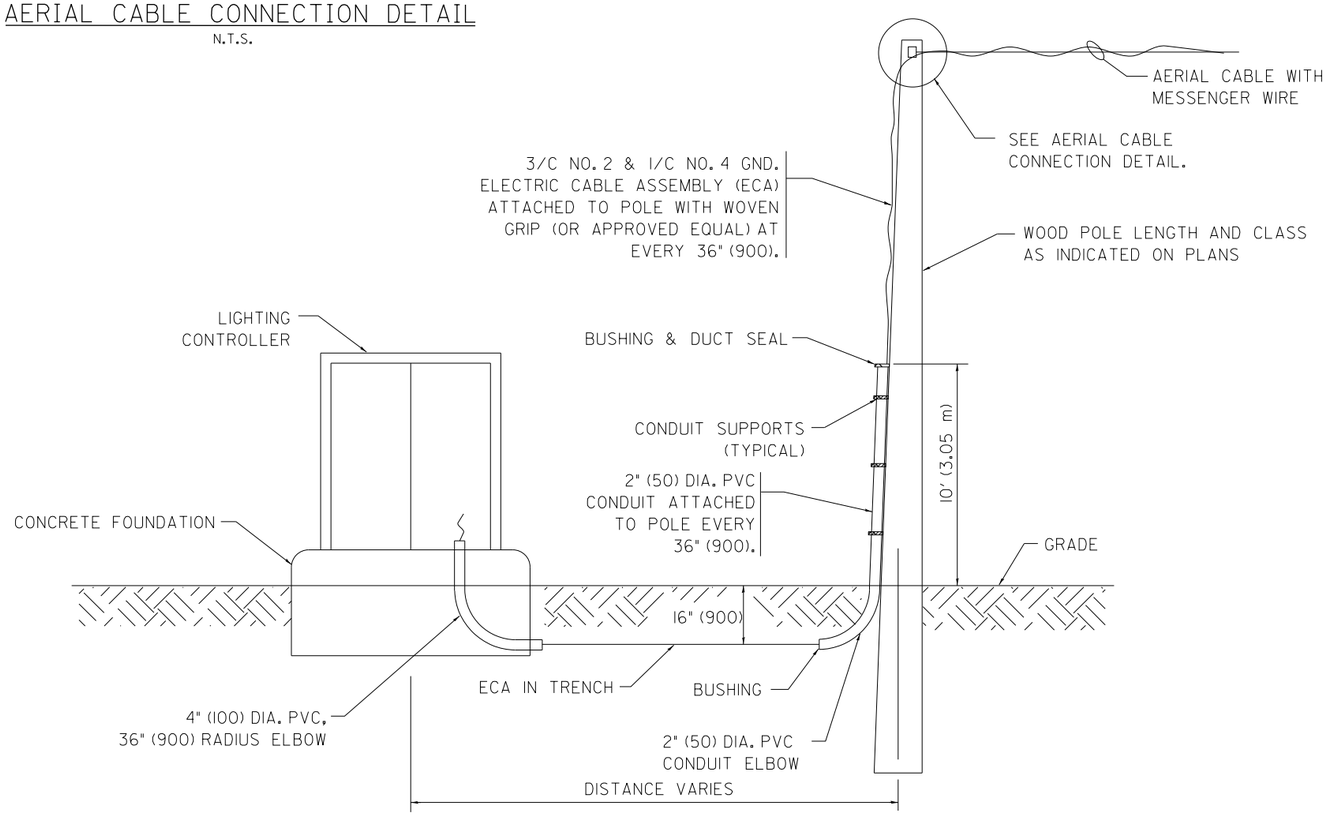

WOOD POLE TO LIGHTING CONTROLLER WIRING CONNECTION DETAIL

N.T.S.

NOTES:

1. ALL DIMENSIONS IN INCHES (MILLIMETERS) UNLESS OTHERWISE INDICATED.
2. SEE PROPOSED LIGHTING PLAN FOR CONDUIT, CABLE AND ROUTING.
3. THE CONTRACTOR SHALL PROVIDE INTERMEDIATE SUPPORTS TO MAINTAIN MINIMUM CLEARANCES. REFER TO AERIAL AERIAL CABLE ATTACHED TO STRUCTURE DETAIL.
4. COST OF SPLICES AND MOUNTING HARDWARE SHALL BE INCLUDED IN THE UNIT PRICE FOR AERIAL CABLE.