| ROUTE NO. | SECTION | COUNTY | TOTAL SHEETS | SHEET NO. |
|---|---|---|---|---|
| F.A.U. 8959 | 05-00016-03-BR | MADISON | 129 | 63 |
| FED. ROAD DIST. NO. 7 | | ILLINOIS | FED. AID PROJECT- | |

SHEET NO. 12
30 SHEETS

Contract # 97351

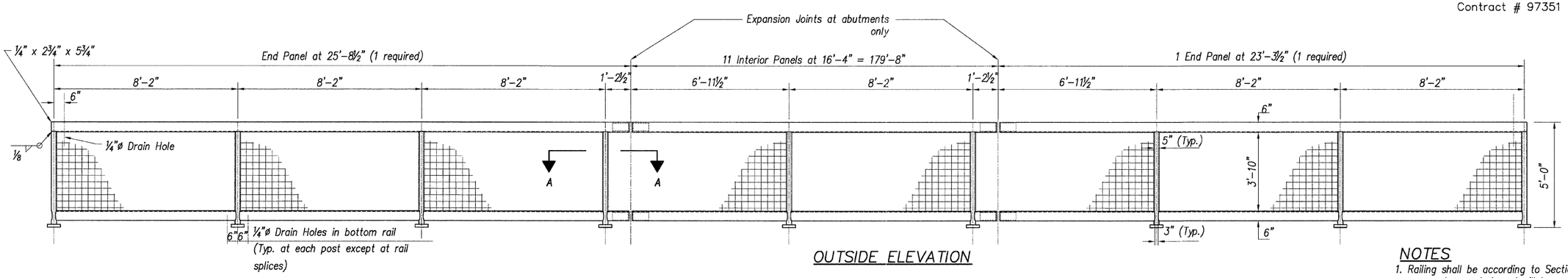


OUTSIDE ELEVATION

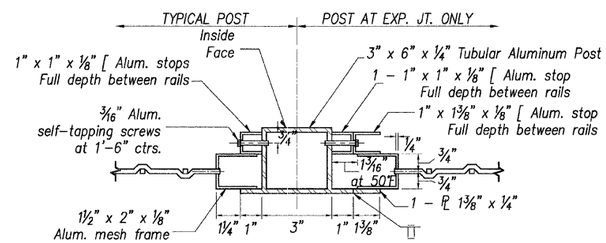


SECTION A-A

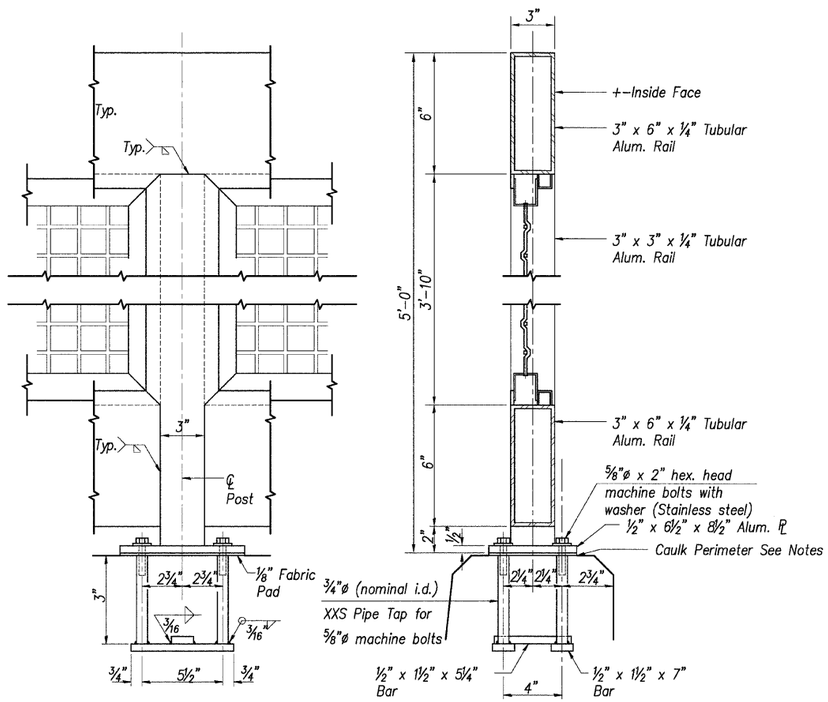


POST DETAILS

In lieu of the cast-in-place anchor device shown, the Contractor has the option of drilling and setting ⅝"ø anchor rods according to Article 509.06 of the Standard Specifications.
Embedment shall be according to the manufacturer's specifications.

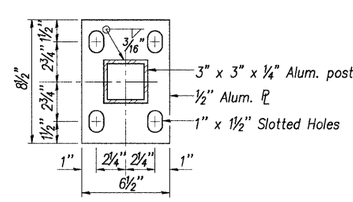


BASE ℙ

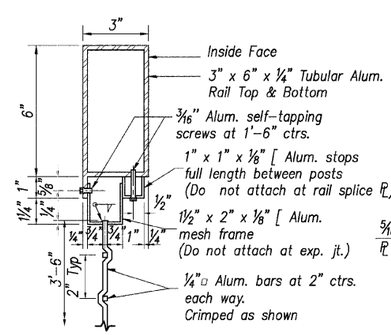


SECTION THRU RAIL

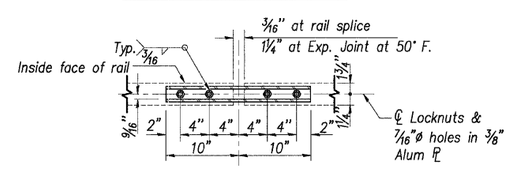


PLAN--BOTT. SPLICE ℙ

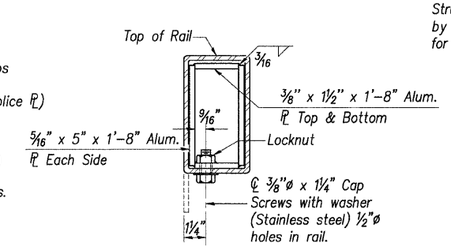


RAIL SPLICE

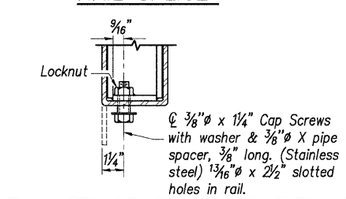


RAIL SPLICE CONN. AT EXP. JT.

## NOTES

1. Railing shall be according to Section 509 of the Standard Specifications, except as noted, and will be paid for at the Contract Unit Price per foot for "Pedestrian Rail (Special)".
2. Stainless steel machine bolts or cap screws shall be in accordance with Article 1006.31(a) of the Standard Specification.
3. All joints in rail shall be spliced per detail.
4. Provide 1 - ⅛" and 2 - 1/16" aluminum shims for 25% of the posts. Rail element shall be parallel to grade - high spots shall be ground and low spots shimmed.
5. Seal perimeter of post base plate to parapet with two component non-staining gray sealing compound with polysulfide liquid polymers, gun grade with primer.
   Fabric bearing pad shall be same dimensions as base plate.
6. Aluminum alloy post shall conform to ASTM: B221 alloy 6063-T6 with min. yield 24.6 ksi min. tensile 30.5 ksi and elongation of 10% in 2".
7. Aluminum alloy rail and channel shall conform to ASTM: B221 alloy 6063-T52 or alloy 6063-T6.
8. Aluminum bar for fence mesh shall conform to ASTM:B211 alloy 6061-T94, or ASTM: B221 alloy 6063-T52.
9. Aluminum plate shall conform to ASTM: B209 alloy 6061-T6 with min. yield 34.8ksi min. tensile 37.7ksi and elongation of 10% in 2".
10. The exposed surfaces of the aluminum pedestrian rail shall be cleaned and given a washcoat pretreatment in accordance with the Steel Structure Painting Council's Specification SSPC-SP1 & SSPC-PT3 followed by a field coat of the waterbourne acrylic top coat paint only specified for structural steel.

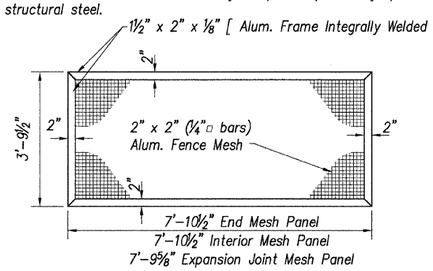


MESH PANEL

End Mesh Panel - 5 Req'd
Interior Mesh Panel - 21 Req'd
Expansion Joint Mesh Panel - 2 Req'd

## BILL OF MATERIAL

| Item | Unit | Total |
|---|---|---|
| Pedestrian Rail | Foot | 229 |

| | |
|---|---|
| DESIGNED | T.M.M. |
| CHECKED | C.M.W. |
| DRAWN | B.D.M./S.H.K. |
| CHECKED | C.M.W. |


Hoelscher Engineering, P.C.
11 Executive Drive Suite 12
Fairview Heights, Illinois 62208
(618)624-8610 FAX: (618)624-8611


| REVISIONS | |
|---|---|
| NAME | DATE |
| | |

ILLINOIS DEPARTMENT OF TRANSPORTATION
PEDESTRIAN RAILING DETAILS
WEST CORBIN STREET OVER F.A.P. 310 (IL-255)
F.A.U. 8959 SECTION 05-00016-03-BR
MADISON COUNTY
STATION 36+23.37
STRUCTURE NO. 060-6851