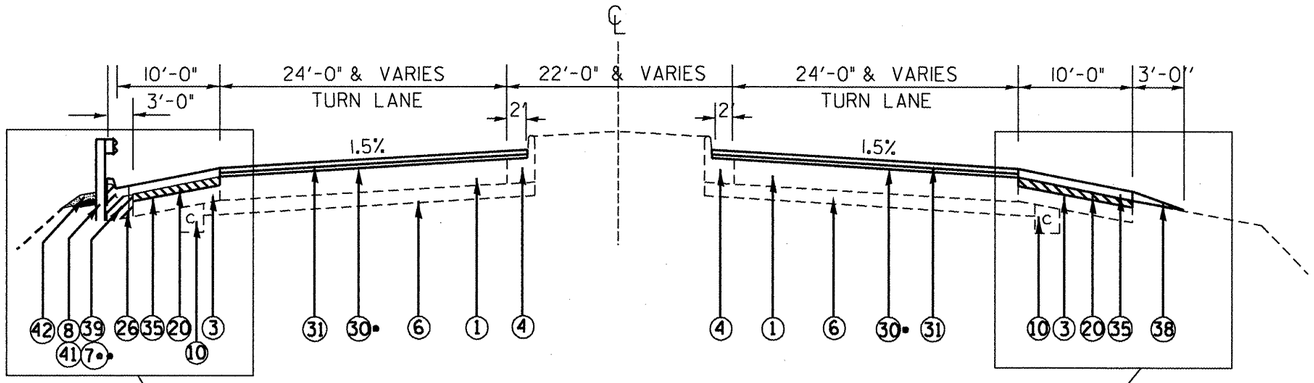

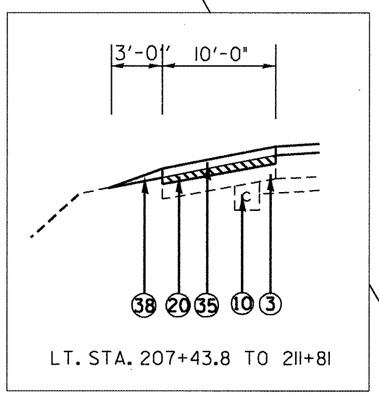

LT. STA. 207+43.8 TO 211+81

* HMA BINDER CSE (VAR)
Sta. 196+40 to 201+50
See pages 95-96 for details

** Bituminous curb removal shall be included in the contract unit price for PAVED SHOULDER REMOVAL and no extra compensation will be allowed.

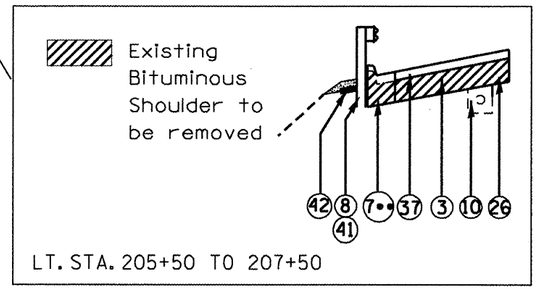

LT. STA. 205+50 TO 207+50

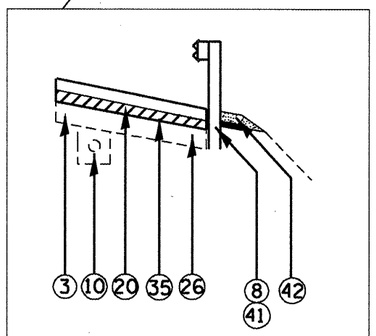

RT. STA. 205+21 TO 206+96

AIRPORT ROAD
STA. 196+00 TO 214+26

LEGEND

1 EXISTING PCC PAVEMENT 10"
2 EXISTING HOT-MIX ASPHALT OVERLAY
3 EXISTING HOT-MIX ASPHALT SHOULDER 10"
4 EXISTING CURB AND GUTTER
5 EXISTING PCC ABSE COURSE 8"
6 EXISTING STABILIZED SUB BASE 4" (BAM)
7 EXISTING BITUMINOUS CURB
8 EXISTING STEEL PLATE BEAM GUARDRAIL
9 EXISTING PCC MEDIAN

20 PROPOSED HOT-MIX ASPHALT SURFACE REMOVAL, 2"
21 PROPOSED HOT-MIX ASPHALT SURFACE REMOVAL, VAR.
22 PROPOSED MEDIAN REMOVAL
23 PROPOSED PAVEMENT REMOVAL
24 PROPOSED CURB AND GUTTER REMOVAL
25 PROPOSED CURB REMOVAL
26 PROPOSED PAVED SHOULDER REMOVAL
27 PROPOSED PAVED DITCH (SPECIAL)
28 PROPSOED PCC BASE COURSE 10"
29 PROPOSED HOT-MIX ASPHALT BINDER COURSE IL-19.0, N50, VAR.
30 PROPOSED POLYMERIZED LEVELING BINDER (MACHINE METHOD), IL-4.75, N50, 3/4"
31 PROPOSED POLYMERIZED HOT-MIX ASPHALT SURFACE COURSE, MIX "D", N50, 1 3/4"
32 PROPOSED POLYMERIZED HOT-MIX ASPHALT SURFACE COURSE, MIX "D", N50, 2"
33 PROPOSED POLYMERIZED HOT-MIX ASPHALT SURFACE COURSE, MIX "D", N50, VAR.
34 PROPOSED HOT-MIX ASPHALT SHOULDERS 2"
35 PROPOSED HOT-MIX ASPHALT SHOULDERS 4.5"
36 PROPOSED HOT-MIX ASPHALT SHOULDERS VAR
37 PROPOSED HOT-MIX ASPHALT SHOULDERS 10"
38 PROPOSED AGGREGATE SHOULDERS, TYPE B
39 PROPOSED COMBINATION CONCRETE CURB AND GUTTER B-6.24
40 PROPOSED CONCRETE GUTTER, TYPE A (MODIFIED)
41 PROPOSED STEEL PLATE BEAM GUARDRAIL, TYPE A
42 PROPOSED GUARDRAIL AGGREGATE EROSION CONTROL