HEUER AND ASSOCIATES
Consulting Engineers
2315 Enterprise Drive - Suite 102 Westchester, IL 60154-5811 708-492-1000

F.A.U. RTE.	SECTION	COUNTY	TOTAL SHEETS	SHEET No.
1004	08-00079-01-FP	COOK	46	46
STA.		TO STA.		
FED. ROAD DIST. NO. 1	ILLINOIS	FED. AID PROJECT		

CONTRACT No. 63007

PLAN		BY	DATE
NOTE BOOK NO.	SURVEYED / PLOTTED / ALIGNMENT CHECKED / RT. OF WAY CHECKED / CADD FILE NAME		

PROFILE		BY	DATE
NOTE BOOK NO.	SURVEYED / PLOTTED / GRADES CHECKED / CADD FILE NAME STRUCTURE NOTATIONS CHKD		

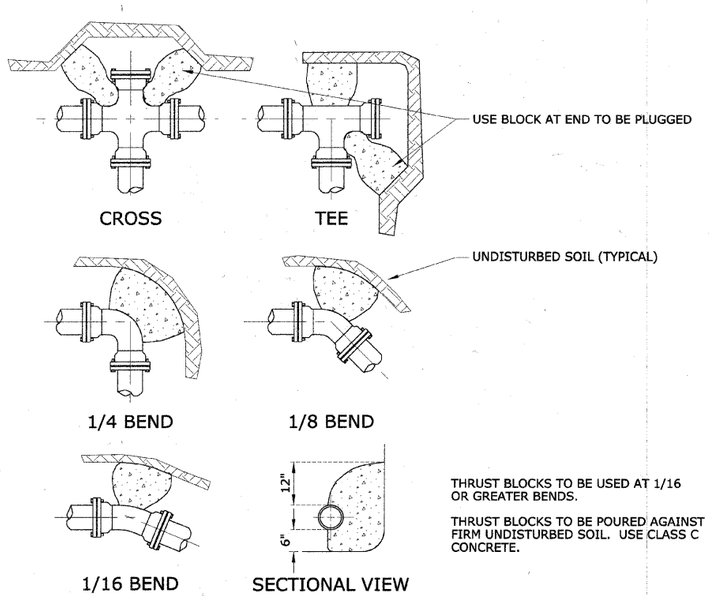

THRUST BLOCKS TO BE USED AT 1/16 OR GREATER BENDS.

THRUST BLOCKS TO BE POURED AGAINST FIRM UNDISTURBED SOIL. USE CLASS C CONCRETE.

THRUST BLOCK DETAIL

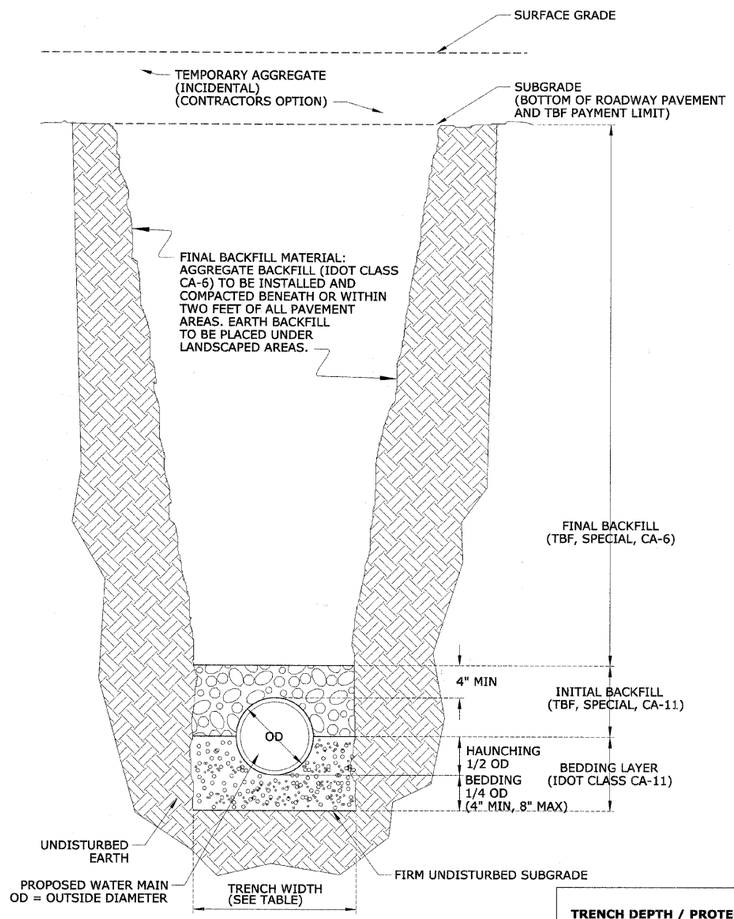

WATER TRENCH DETAIL

TRENCH DEPTH / PROTECTION	MAXIMUM PAYMENT WIDTH OF TRENCH
5 FT AND LESS, W/O PROTECTION	OD + 18"
5 FT AND LESS, W/ PROTECTION	OD + 36"
GREATER THAN 5 FT	OD + 36"

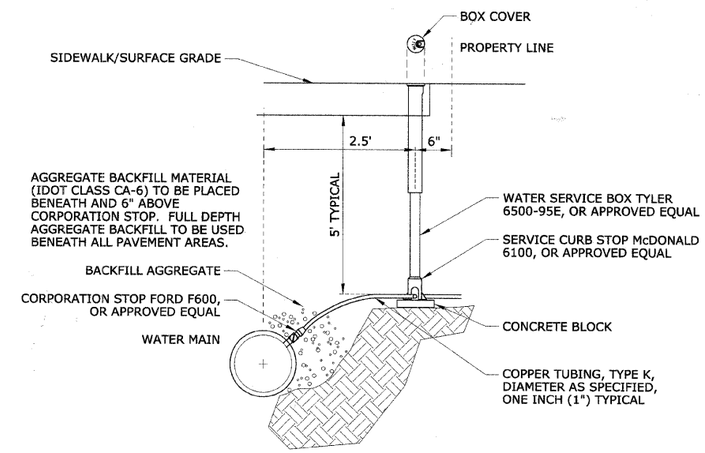

WATER SERVICE DETAIL

REVISIONS NAME	DATE

ILLINOIS DEPARTMENT OF TRANSPORTATION

BLUFF AVENUE IMPROVEMENTS STAGE 1

CONSTRUCTION DETAILS - SPECIAL

SCALE: NTS
DATE 07/18/2008

DRAWN BY H&A
CHECKED BY PFH