STATE OF ILLINOIS
DEPARTMENT OF PUBLIC WORKS & BUILDINGS
DIVISION OF HIGHWAYS

ROUTE No.	SEC.	COUNTY	TOTAL SHEETS	SHEET No.
F.A.I. 74	90-15 VB	TAZEWELL	23	8
FED. ROAD DIST. No. 7	ILLINOIS			

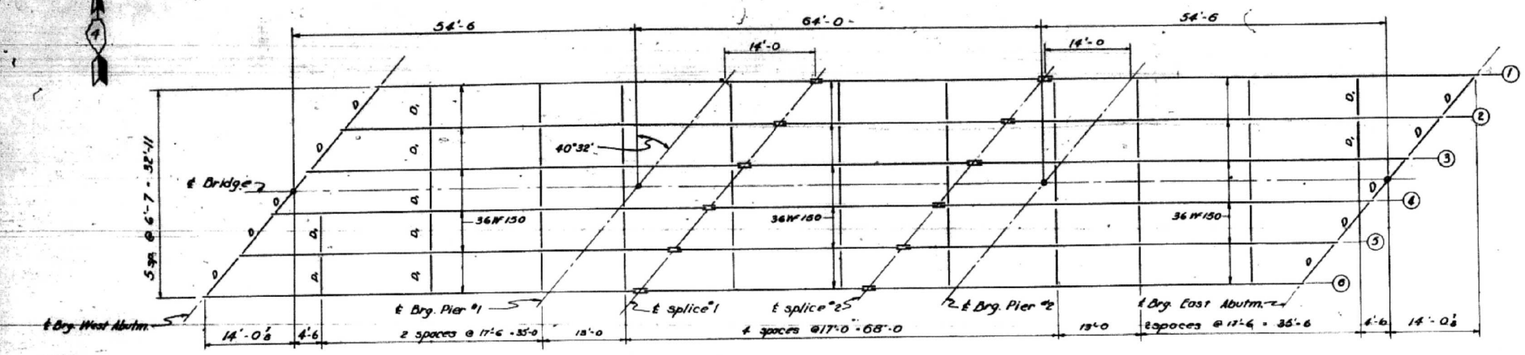

PLAN OF STRUCTURAL STEEL

NOTE:
All interior diaphrams are mark D1
All end diaphrams are mark D

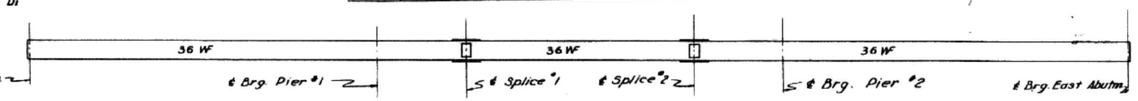

BEAM ELEVATION

℄ Bdg.	West Abut.	No. Struc. 1'-7 13/16
		So. Struc. 1'-7 11/16
	East Abut.	No. Struc. 1'-8 1/4
		So. Struc. 1'-8 1/16

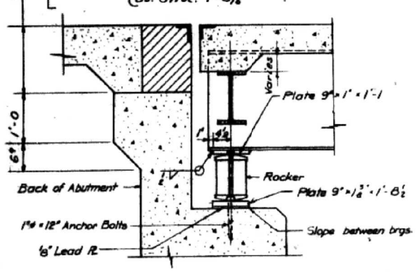

SECTION AT ABUTMENT

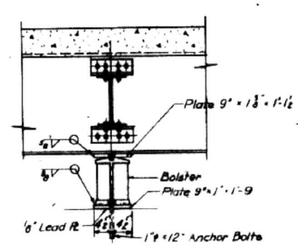

PIER 1

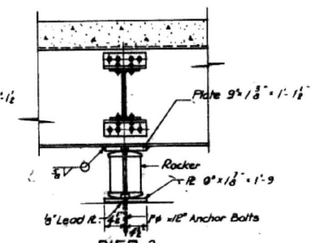

PIER 2

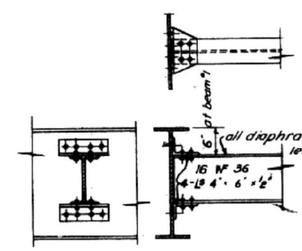

DIAPHRAGM D1

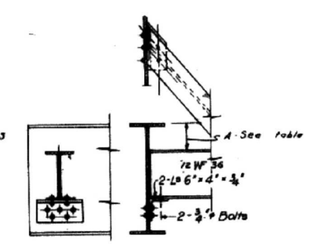

DIAPHRAGM D

A - DIMENSIONS	North Structure		South Structure	
	West Abut.	East Abut.	West Abut.	East Abut.
Beam #1	3"	3"	3"	3"
Beam #2	4 5/8	4 13/16	4 7/16	4 13/16
Beam #3	5 1/16	5 5/8	5 3/8	6 1/16
Beam #4	5 5/8	7 1/2	6 3/8	7 1/4
Beam #5	6 5/8	7 9/16	6	7 9/16
Beam #6	5 3/8	7 3/8	5 1/16	6 3/8

ELEVATIONS - TOPS OF BEAMS

NORTH STRUCTURE				
Beam	℄ Brg. West Abut.	℄ Splice 1	℄ Splice 2	℄ Brg. East Abut.
1	738.47	737.75	737.35	736.55
2	738.60	737.90	737.50	736.71
3	738.72	738.03	737.64	736.86
4	738.77	738.08	737.70	736.93
5	738.75	738.07	737.69	736.93
6	738.71	738.04	737.67	736.92

SOUTH STRUCTURE				
Beam	℄ Brg. West Abut.	℄ Splice 1	℄ Splice 2	℄ Brg. East Abut.
1	738.92	738.30	737.95	737.24
2	739.05	738.45	738.09	737.39
3	739.16	738.55	738.22	737.53
4	739.20	738.60	738.27	737.59
5	739.17	738.58	738.26	737.59
6	739.12	738.55	738.22	737.56

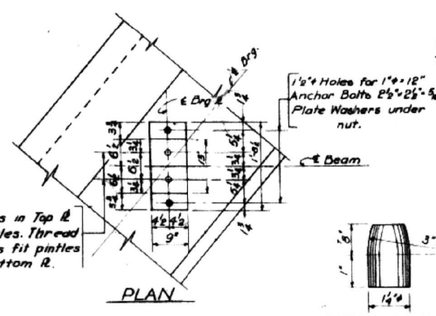

PLAN

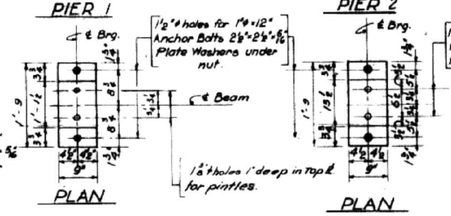

PLAN

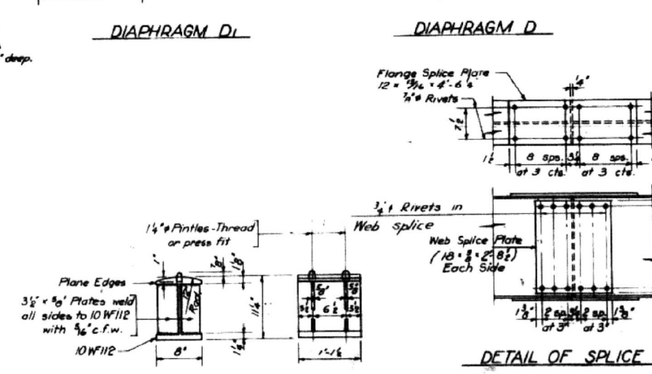

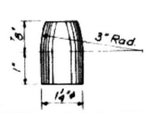

DETAIL OF PINTLE

DETAIL OF BEARING AT ABUTMENTS & PIER 2

DETAIL OF BEARING AT PIER 1

DETAIL OF SPLICE

NOTE: All holes to be reamed with all parts assembled to grade and all parts match marked. All rivets 7/8" ϕ holes 1/16" except as noted.

DESIGNED	E. L
CHECKED	R. R.
DRAWN	S.F. Mularz / H.C. Graff
CHECKED	M. B.

EXAMINED
ENGINEER OF BRIDGES AND TRAFFIC STRUCTURES
PASSED
ENGINEER OF DESIGN
APPROVED
CHIEF HIGHWAY ENGINEER

FOR INFORMATION ONLY

STRUCTURAL STEEL DETAILS
F.A.I. RT. 74 - SECTION 90-15 VB
F.A.I. RT. 74 OVER A.T. & S.F. RR
STATION 644 + 27.11
TAZEWELL COUNTY

WARREN AND VAN PRAAG, INC.
CONSULTING ENGINEERS - DECATUR, ILLINOIS

4 OF 8

MODEL: Default
FILE NAME: P:\2019\190388\WO6 I-74 Bridge PSEs\4 CADD - DWG\4.4 Struc\0900021-0022\0900021-0022-68F54-020 Existing Structural Steel Details.dgn

TWM ENGINEERING GEOSPATIAL SERVICES
TWM, INC.
WWW.TWM-INC.COM
IL DESIGN FIRM LICENSE NO: 184-001220

USER NAME = ckoltveit	DESIGNED - NP	REVISED -	
	CHECKED - ALN	REVISED -	
PLOT SCALE = 0:2.0000 ':" / in.	DRAWN - NP	REVISED -	
PLOT DATE = 12/1/2020	CHECKED - ALN	REVISED -	

STATE OF ILLINOIS
DEPARTMENT OF TRANSPORTATION

EXISTING STRUCTURAL STEEL DETAILS
SN 090-0021 & 090-0022
SHEET 20 OF 30 SHEETS

F.A.I. RTE.	SECTION	COUNTY	TOTAL SHEETS	SHEET NO.
74	90-15(HB(1-4);VB;B)BP,BJR,BRR	TAZEWELL	192	101
		CONTRACT NO. 68F54		
	ILLINOIS	FED. AID PROJECT		

ROUTE NO.	SECTION	COUNTY	TOTAL SHEETS	SHEET NO.
F.A.I. 74	90 (15VB-1) I-1	TAZEWELL	101	64
FED. ROAD DIST. NO. 7	ILLINOIS	FED. AID PROJECT-		

SHEET NO. 10
22 SHEETS

STATE OF ILLINOIS
DEPARTMENT OF TRANSPORTATION

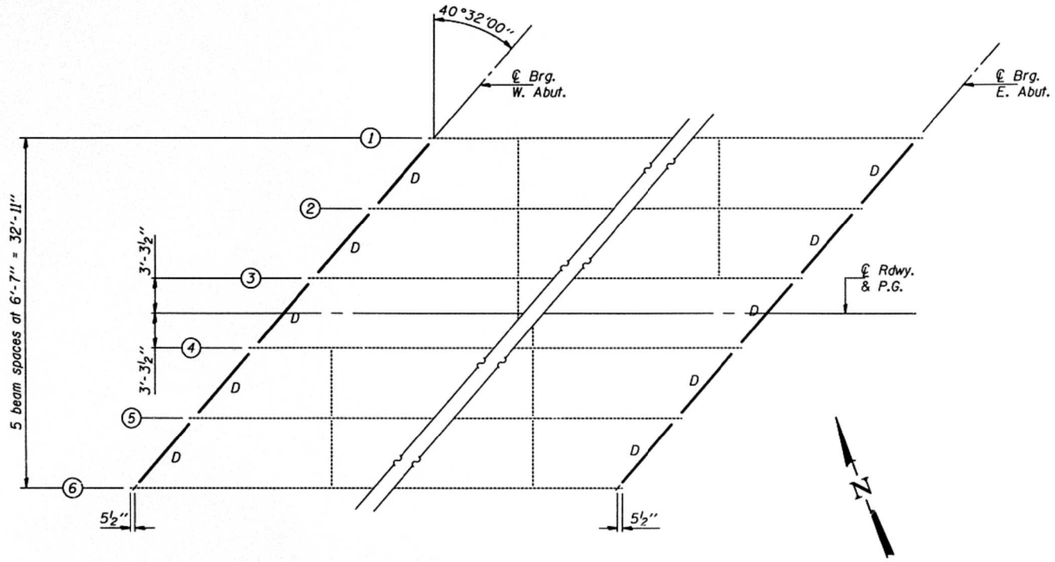

PARTIAL FRAMING PLAN

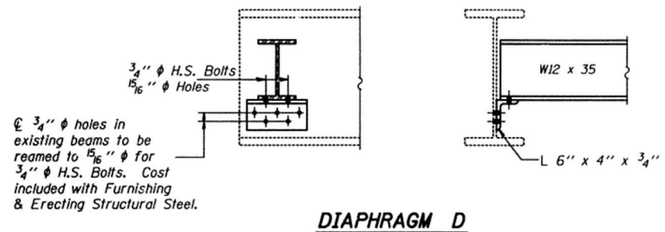

DIAPHRAGM D
20 Required

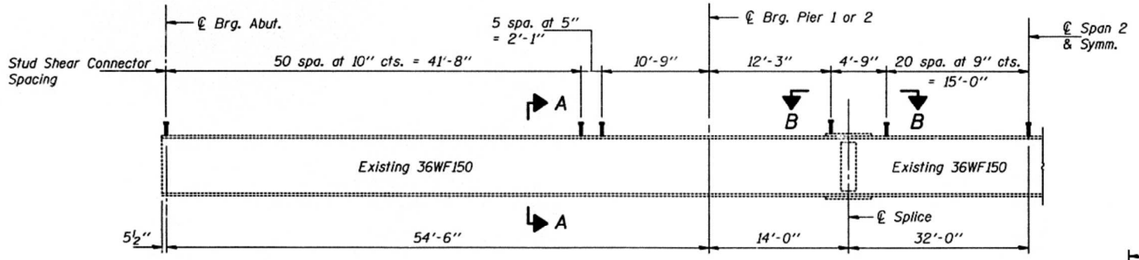

BEAM ELEVATION

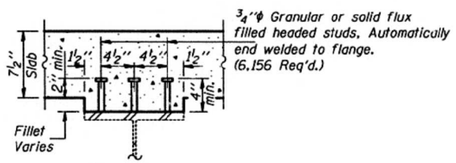

SECTION A-A

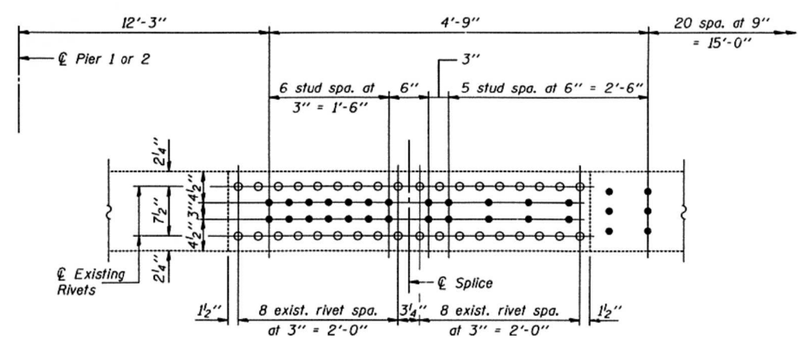

VIEW B-B

Notes:
See sheet 11 of 22 for Interior Beam Moment and Reaction Tables.
New ¾" ϕ H.S. Bolts in 15/16" ϕ holes shall be used for all diaphragm connections. Two hardened washers shall be required at diaphragm connections.
Existing end diaphragms, angles, bolts and rivets to be removed as indicated. Cost included with Structural Steel Removal.
Cost of field drilling or reaming of holes is included with Furnishing and Erecting Structural Steel.

DESIGNED	Nicholas J. Sovell
CHECKED	Chad Fuesting
DRAWN	Michael R. Gillette
CHECKED	C.J.F. N.J.S.

January 26, 2000
EXAMINED Thomas J. Domagalski
ENGINEER OF BRIDGE DESIGN
PASSED Ralph E. Anderson
ENGINEER OF BRIDGES AND STRUCTURES

FOR INFORMATION ONLY

STRUCTURAL STEEL DETAILS
F.A.I. RTE. 74 - SEC. 90(15VB-1)I-1
TAZEWELL COUNTY
STATION 644+27.11

ROUTE NO.	SECTION	COUNTY	TOTAL SHEETS	SHEET NO.
F.A.I. 74	90 (15VB-1) I-1	TAZEWELL	101	65
FED. ROAD DIST. NO. 7	ILLINOIS	FED. AID PROJECT-		

SHEET NO. 11
22 SHEETS

STATE OF ILLINOIS
DEPARTMENT OF TRANSPORTATION

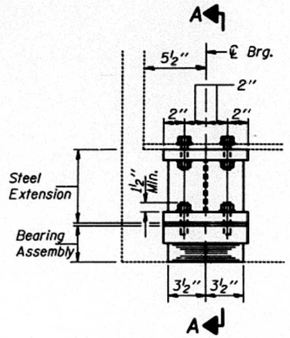

ELEVATION AT WEST ABUT.

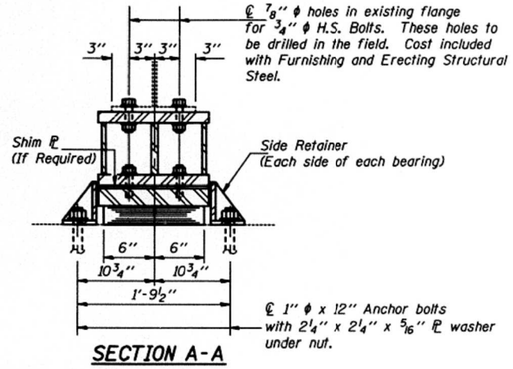

SECTION A-A

TYPE I ELASTOMERIC EXP. BRG.

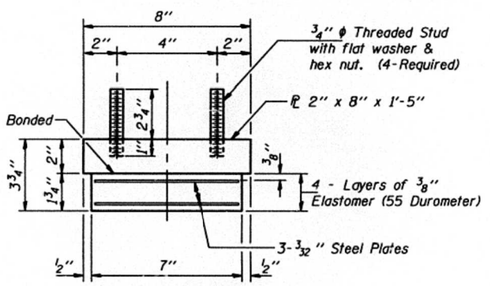

BEARING ASSEMBLY

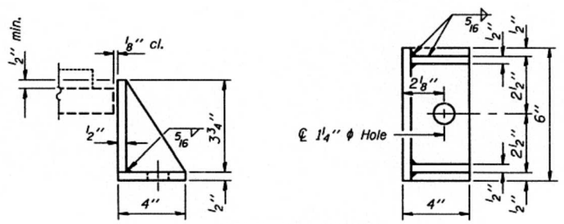

SIDE RETAINER

Equivalent rolled angle with stiffeners will be allowed in lieu of welded plates. Weight included with Furnishing and Erecting Structural Steel.

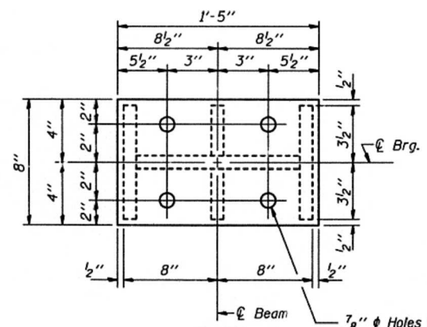

PLAN

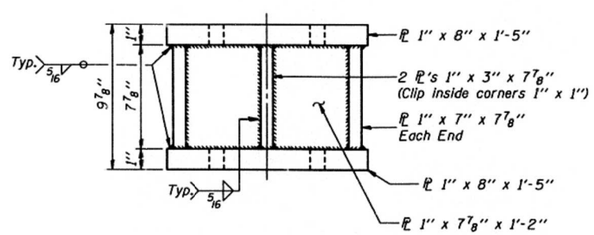

STEEL EXTENSION AT WEST ABUT.

INTERIOR BEAM MOMENT TABLE				
		0.4 Sp. 1	Pier	0.5 Span 2
Is	(in⁴)	9040	9040	9040
Ic (n)	(in⁴)	22352	—	22352
Ic (3n)	(in⁴)	16354	—	16354
Ss	(in³)	504	504	504
Sc (n)	(in³)	717	—	717
Sc (3n)	(in³)	647	—	647
Z	(in³)	—	581	—
D	(k/ft.)	0.81	1.10	0.81
MD	('k)	175	365	130
sD	(k/ft.)	0.29	—	0.29
MsD	('k)	70	—	67
ML	('k)	362	202	370
M (Imp)	('k)	101	55	98
S_3[ML+M(Imp)]	('k)	772	428	780
Ma	('k)	1322	1031	1270
Mu	('k)	2780	1598	2780
fsD non-comp	(k.s.i.)	4.2	8.7	3.1
fsD (comp)	(k.s.i.)	1.3	—	1.2
fsS_3(L+Imp)	(k.s.i.)	12.9	10.2	13.1
fs (Overload)	(k.s.i.)	18.4	18.9	17.4
fs (Total)	(k.s.i.)	—	—	—
VR	(k)	44.0	—	46.0

INTERIOR BEAM REACTION TABLE			
		Abut.	Pier
RD	(k)	23.2	71.7
RL	(k)	34.6	41.3
Imp.	(k)	9.6	11.5
R (Total)	(k)	67.4	124.5

Is and Ss are the moment of inertia and section modulus of the steel section used in computing fs (Total & Overload).

Ic(n) and Sc(n) are the moment of inertia and section modulus of the composite section used in computing stresses due to Live Load.

Ic(3n) and Sc(3n) are the moment of inertia and section modulus of the composite section used in computing stresses due to superimposed dead loads. (see AASHTO 10.38)

VR is the maximum Live Load + Impact shear range in span.

Z is the plastic section modulus used to determine the fully plastic moments in the non-composite areas.

Ma (Applied Moment)=1.3[MD + MsD + S_3(ML + M(Imp))].

The Plastic Moment capacity (Mu) is computed according to AASHTO 10.48.1 and 10.50.1.1.

fs (Overload) is the sum of the stresses due to MD + MsD + S_3(ML + M(Imp)).

fs (Total) (Non-compact section) is the sum of the stresses due to 1.3[MD + MsD + S_3(ML + M(Imp))].

FOR INFORMATION ONLY

Notes:

For anchor bolt installation details see sheet 13 of 22.
Shim plates shall not be placed under Bearing Assembly.
For Jack and Remove Existing Bearing Procedure, see sheet 12 of 22.
New steel extensions, side retainers, connection bolts, fill plates, shim plates and anchor bolts are included with Furnishing and Erecting Structural Steel.

BILL OF MATERIAL

Item	Unit	Total
Jack and Remove Existing Bearings	Each	12
Elastomeric Bearing Assembly, Type I	Each	12

DESIGNED	Nicholas J. Sovell
CHECKED	Chad Fuesting
DRAWN	Michael R. Gillette
CHECKED	C.J.F. N.J.S.

January 26, 2000
EXAMINED Thomas J. Domagalski
ENGINEER OF BRIDGE DESIGN
PASSED Ralph E. Anderson
ENGINEER OF BRIDGES AND STRUCTURES

WEST ABUT. BEARING DETAILS
F.A.I. RTE. 74 - SEC. 90(15VB-1)I-1
TAZEWELL COUNTY
STATION 644+27.11

MODEL: Default
FILE NAME: P:\2019\190388\WO6 I-74 Bridge PSEs\4 CADD - DWG\4.4 Struc\0900021-0022\0900021-0022-68F54-022 Existing Structural Steel Details.dgn

TWM ENGINEERING GEOSPATIAL SERVICES
TWM, INC.
WWW.TWM-INC.COM
IL DESIGN FIRM LICENSE NO: 184-001220

USER NAME = ckoltveit	DESIGNED - NP	REVISED -	
	CHECKED - ALN	REVISED -	
PLOT SCALE = 0:2.0000 ':" / in.	DRAWN - NP	REVISED -	
PLOT DATE = 12/1/2020	CHECKED - ALN	REVISED -	

STATE OF ILLINOIS
DEPARTMENT OF TRANSPORTATION

EXISTING BEARING DETAILS
SN 090-0021 & 090-0022
SHEET 22 OF 30 SHEETS

F.A.I. RTE.	SECTION	COUNTY	TOTAL SHEETS	SHEET NO.
74	90-15[HB(1-4);VB;B]BP,BJR,BRR	TAZEWELL	192	103
		CONTRACT NO. 68F54		
		ILLINOIS	FED. AID PROJECT	

STATE OF ILLINOIS
DEPARTMENT OF TRANSPORTATION

ROUTE NO.	SECTION	COUNTY	TOTAL SHEETS	SHEET NO.
F.A.I. 74	90 (15VB-1) I-1	TAZEWELL	101	66
FED. ROAD DIST. NO. 7	ILLINOIS	FED. AID PROJECT-		

SHEET NO. 12
22 SHEETS

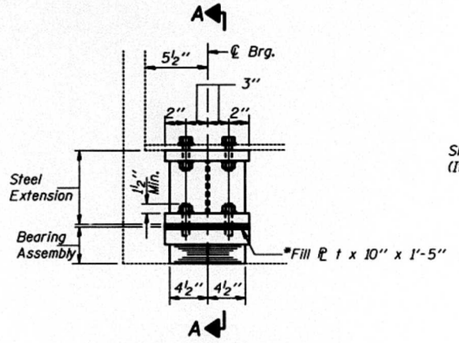

ELEVATION AT EAST ABUT.

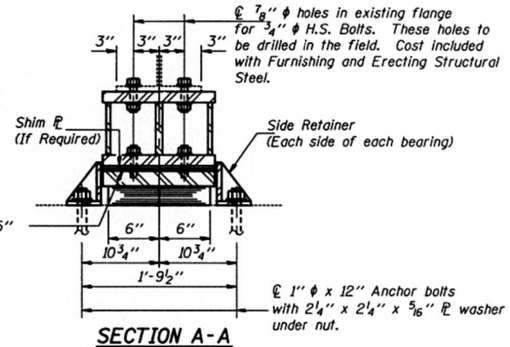

SECTION A-A

TYPE I ELASTOMERIC EXP. BRG.

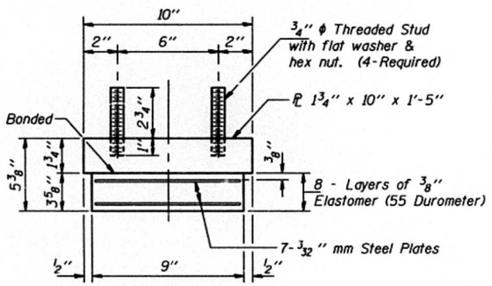

BEARING ASSEMBLY

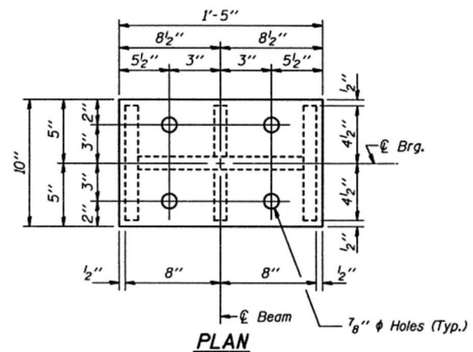

PLAN

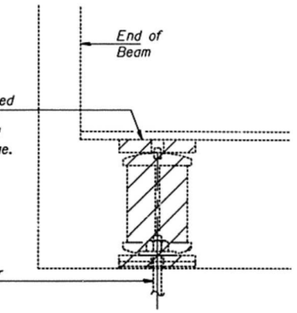

JACK AND REMOVE EXISTING BEARING PROCEDURE

1. The Contractor shall submit for approval by the Engineer, plans for lifting existing beams and installing new bearings prior to commencing any related work. This work shall be done after existing concrete deck is removed and prior to pouring of the new concrete deck. The maximum dead load reaction per beam (weight of steel only) is 4.0^k. Minimum jack capacity = 8.0^k.

2. Prior to ordering any material, the Contractor shall verify steel extension and shim plate thicknesses required at each bearing.

3. The bottom flange of the existing beam shall be cleaned as specified for Structural Steel.

4. The new bearings and steel extensions shall be in place and the jacks shall be lowered before the new concrete deck is poured.

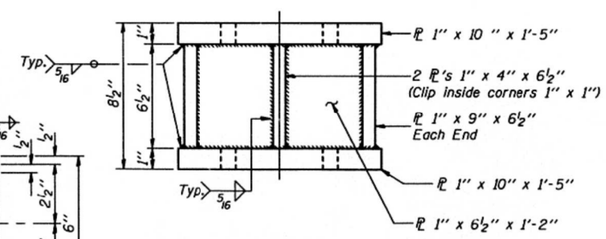

STEEL EXTENSION AT EAST ABUT.

*FILL PLATE THICKNESS (t)

BEAM	EB	WB
1	¼"	—
2	½"	¼"
3	¼"	¼"
4	½"	¼"
5	⅜"	½"
6	¼"	¼"

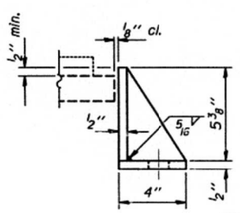

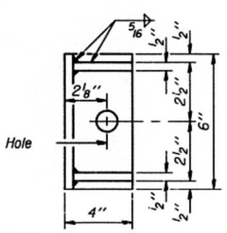

SIDE RETAINER

Equivalent rolled angle with stiffeners will be allowed in lieu of welded plates. Weight included with Furnishing and Erecting Structural Steel.

BILL OF MATERIAL

Item	Unit	Total
Jack and Remove Existing Bearings	Each	12
Elastomeric Bearing Assembly, Type I	Each	12

Notes:

For anchor bolt installation details see sheet 13 of 22.
Shim plates shall not be placed under Bearing Assembly.
New steel extensions, side retainers, connection bolts, fill plates, shim plates and anchor bolts are included with Furnishing and Erecting Structural Steel.

DESIGNED	Nicholas J. Sovell	January 26, 2000
CHECKED	Chad Fuesting	EXAMINED Thomas J. Domagalski, ENGINEER OF BRIDGE DESIGN
DRAWN	Michael R. Gillette	PASSED Ralph E. Anderson, ENGINEER OF BRIDGES AND STRUCTURES
CHECKED	C.J.F. N.J.S.	

EAST ABUT. BEARING DETAILS
F.A.I. RTE. 74 - SEC. 90(15VB-1)I-1
TAZEWELL COUNTY
STATION 644+27.11

Notes: Hatched area to be poured after superstructure forms have been removed. Quantity of concrete for hatched area is included with Concrete Superstructure on sheet 7 of 22.
Reinforcement bars designated (E) shall be epoxy coated.
For anchor bolt installation details see sheet 13 of 22.
For concrete removal details see sheet 14 of 22.
Work this sheet with sheets 16 and 17 of 22.

STATE OF ILLINOIS
DEPARTMENT OF TRANSPORTATION

ROUTE NO.	SECTION	COUNTY	TOTAL SHEETS	SHEET NO.
F.A.I. 74	90 (15VB-1) I-1	TAZEWELL	101	69
FED. ROAD DIST. NO. 7	ILLINOIS	FED. AID PROJECT-		

SHEET NO. 15
22 SHEETS

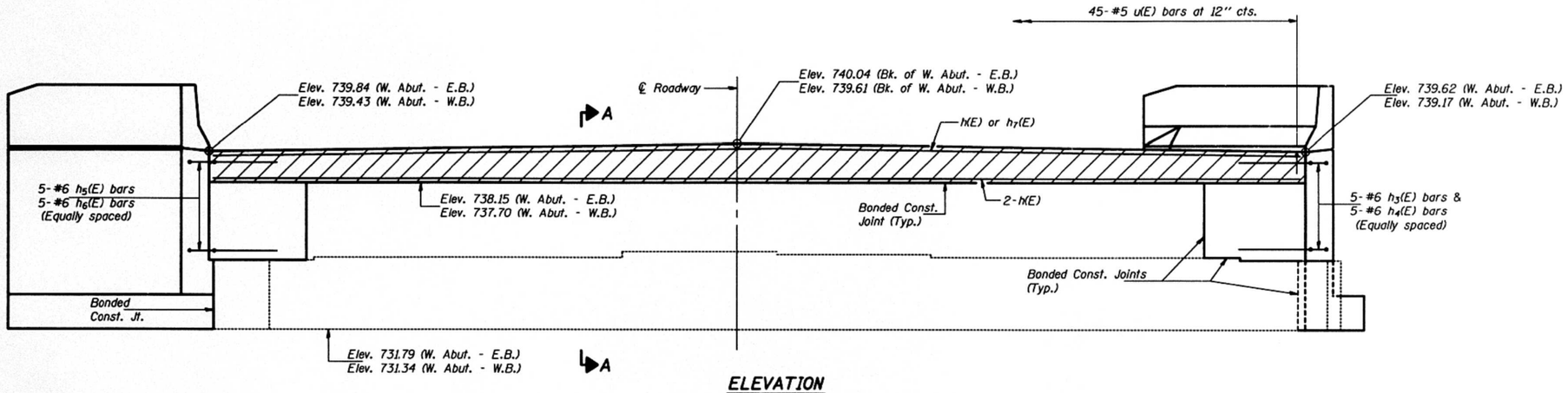

ELEVATION
(Looking West)

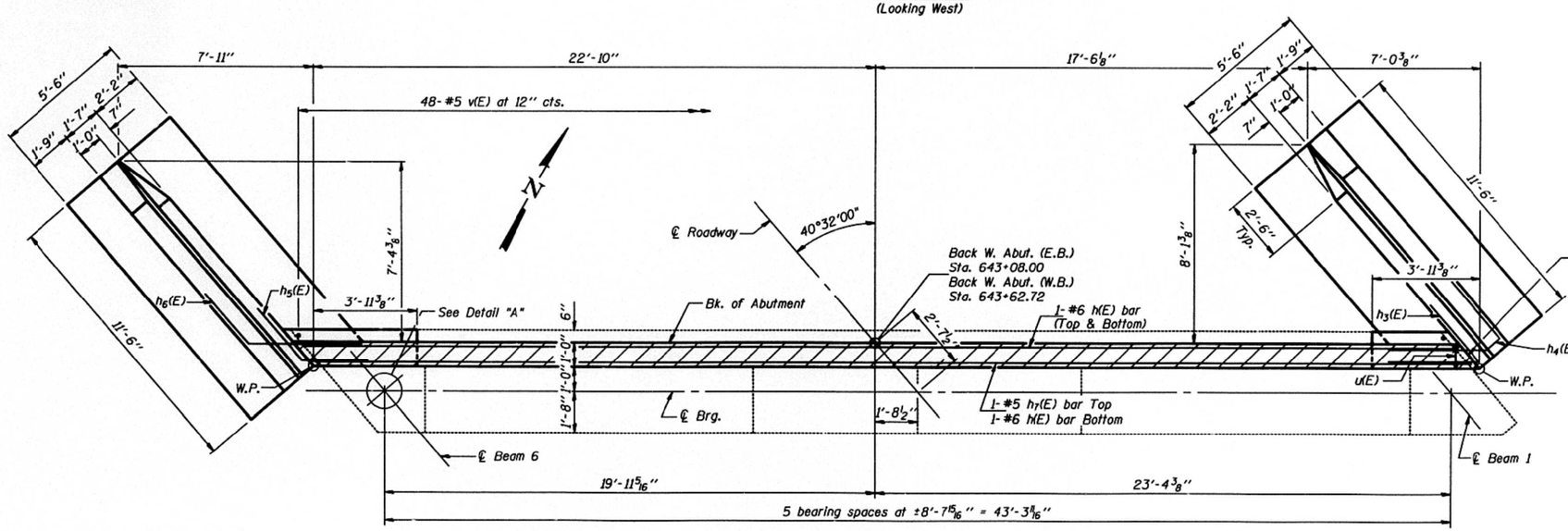

TOP VIEW

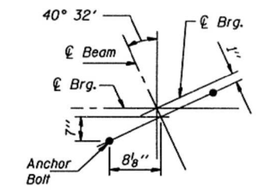

DETAIL "A"

DESIGNED	Nicholas J. Sovell
CHECKED	Chad Fuesting
DRAWN	Michael R. Gillette
CHECKED	C.J.F. N.J.S.

January 26, 2000
EXAMINED Thomas J. Domagalski
ENGINEER OF BRIDGE DESIGN
PASSED Robert F. Anderson
ENGINEER OF BRIDGES AND STRUCTURES

FOR INFORMATION ONLY

WEST ABUTMENTS
F.A.I. RTE. 74 - SEC. 90(15VB-1)I-1
TAZEWELL COUNTY
STATION 644+27.11

MODEL: Default
FILE NAME: P:\2019\1903BBWO6 I-74 Bridge PSE\v4 CADD - DWG\4.4 Struc\0900021-0022\0900021-0022-68F54-024 Existing Abutment.dgn

TWM ENGINEERING GEOSPATIAL SERVICES
TWM, INC.
WWW.TWM-INC.COM
IL DESIGN FIRM LICENSE NO: 184-001220

USER NAME = ckoltveit	DESIGNED - NP	REVISED -	
	CHECKED - ALN	REVISED -	
PLOT SCALE = 0:2.0000 ':' / in.	DRAWN - NP	REVISED -	
PLOT DATE = 12/1/2020	CHECKED - ALN	REVISED -	

STATE OF ILLINOIS
DEPARTMENT OF TRANSPORTATION

EXISTING ABUTMENT
SN 090–0021 & 090–0022
SHEET 24 OF 30 SHEETS

F.A.I. RTE.	SECTION	COUNTY	TOTAL SHEETS	SHEET NO.
74	90-15[HB(1-4);VB;B]BP,BJR,BRR	TAZEWELL	192	105
		CONTRACT NO. 68F54		
		ILLINOIS	FED. AID PROJECT	

STATE OF ILLINOIS
DEPARTMENT OF TRANSPORTATION

ROUTE NO.	SECTION	COUNTY	TOTAL SHEETS	SHEET NO.
F.A.I. 74	90 (15VB-1) I-1	TAZEWELL	101	70
FED. ROAD DIST. NO. 7	ILLINOIS	FED. AID PROJECT-		

SHEET NO. 16
22 SHEETS

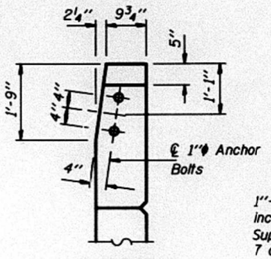

VIEW D-D
(W.S. Bridge Only)

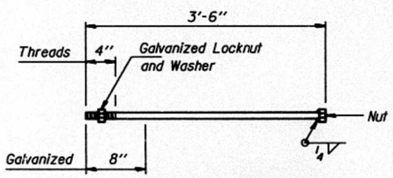

1" ϕ ANCHOR BOLT

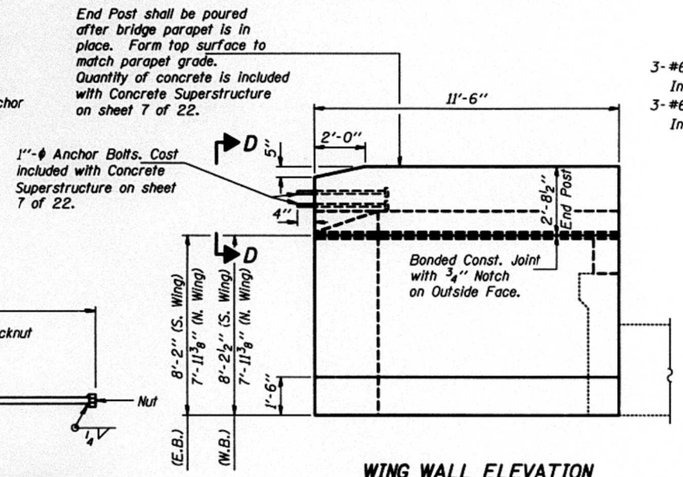

WING WALL ELEVATION

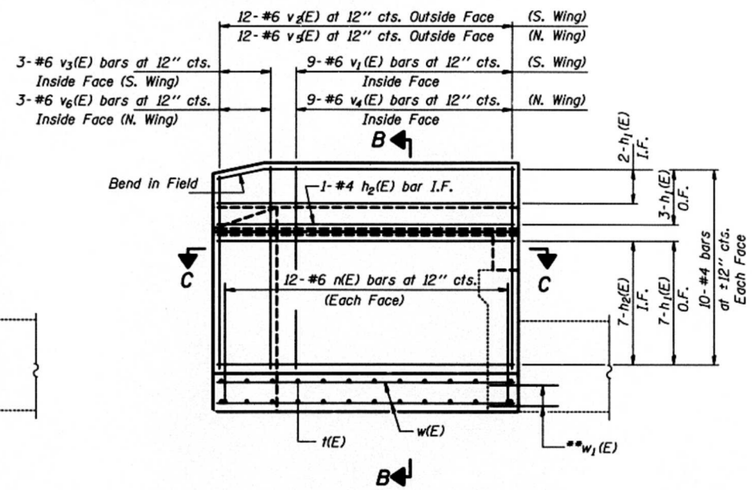

WING WALL ELEVATION
Reinforcement

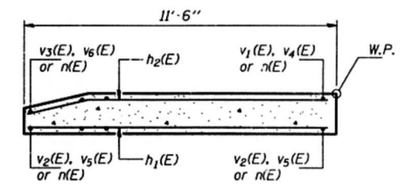

SECTION C-C

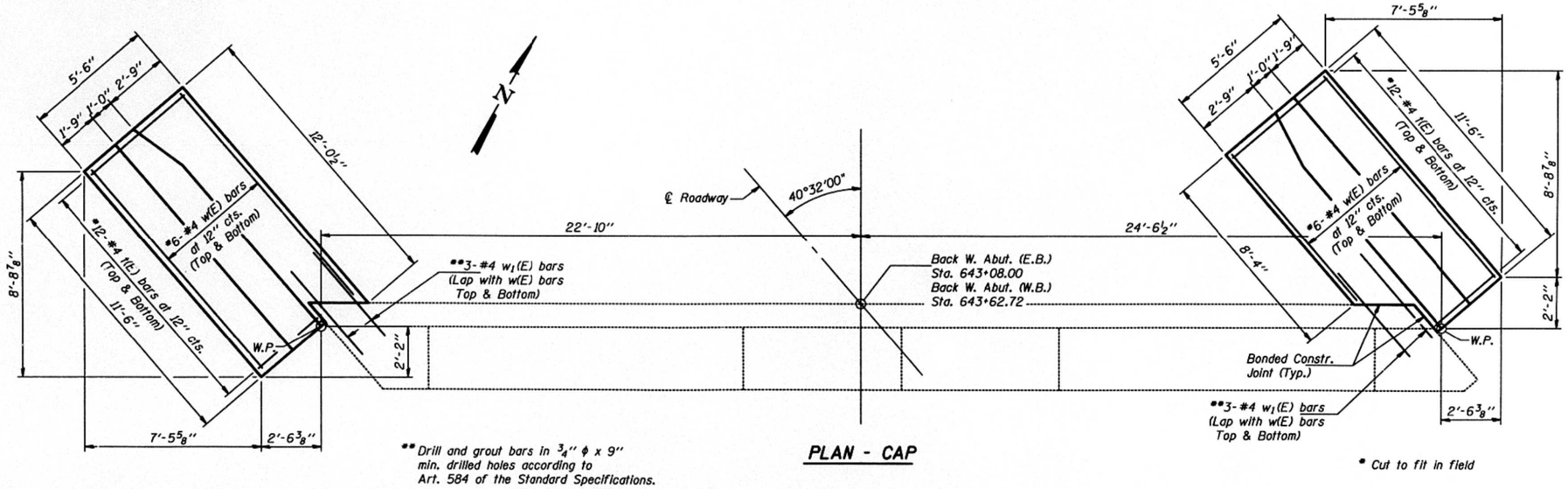

** Drill and grout bars in ¾" ϕ x 9" min. drilled holes according to Art. 584 of the Standard Specifications.

PLAN - CAP

* Cut to fit in field

DESIGNED	Nicholas J. Sovell
CHECKED	Chad Fuesting
DRAWN	Michael R. Gillette
CHECKED	C.J.F. N.J.S.

January 26, 2000
EXAMINED Thomas J. Domagalski
ENGINEER OF BRIDGE DESIGN
PASSED Ralph E. Anderson
ENGINEER OF BRIDGES AND STRUCTURES

FOR INFORMATION ONLY

WEST ABUTMENTS
F.A.I. RTE. 74 - SEC. 90(15VB-1)I-1
TAZEWELL COUNTY
STATION 644+27.11

MODEL: Default
FILE NAME: P:\2019\19038\WO6 I-74 Bridge PSE\4 CADD - DWG\4.4 Struc\0900021-0022\0900021-0022-68F54-025_Existing Abutment.dgn

TWM ENGINEERING GEOSPATIAL SERVICES
TWM, INC.
WWW.TWM-INC.COM
IL DESIGN FIRM LICENSE NO: 184-001220

USER NAME = ckoltveit	DESIGNED - NP	REVISED -	
	CHECKED - ALN	REVISED -	
PLOT SCALE = 0:2.0000 ':' / in.	DRAWN - NP	REVISED -	
PLOT DATE = 12/1/2020	CHECKED - ALN	REVISED -	

STATE OF ILLINOIS
DEPARTMENT OF TRANSPORTATION

EXISTING ABUTMENT
SN 090-0021 & 090-0022
SHEET 25 OF 30 SHEETS

F.A.I. RTE.	SECTION	COUNTY	TOTAL SHEETS	SHEET NO.
74	90-15[HB(1-4);VB;B]BP,BJR,BRR	TAZEWELL	192	106
		CONTRACT NO. 68F54		
		ILLINOIS	FED. AID PROJECT	

STATE OF ILLINOIS
DEPARTMENT OF TRANSPORTATION

ROUTE NO.	SECTION	COUNTY	TOTAL SHEETS	SHEET NO.
F.A.I. 74	90 (15VB-1) I-1	TAZEWELL	101	71
FED. ROAD DIST. NO. 7	ILLINOIS	FED. AID PROJECT-		

SHEET NO. 17
22 SHEETS

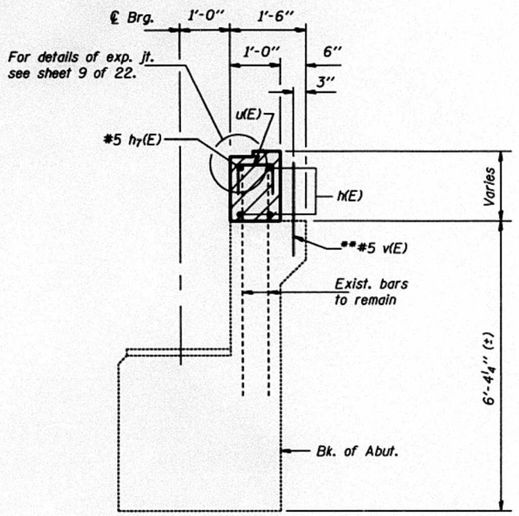

SECTION A-A
(Dimensions at Rt. L's)

** Drill & grout bars in 7/8" ϕ x 6" drilled holes according to Article 584 of the Standard Specifications.

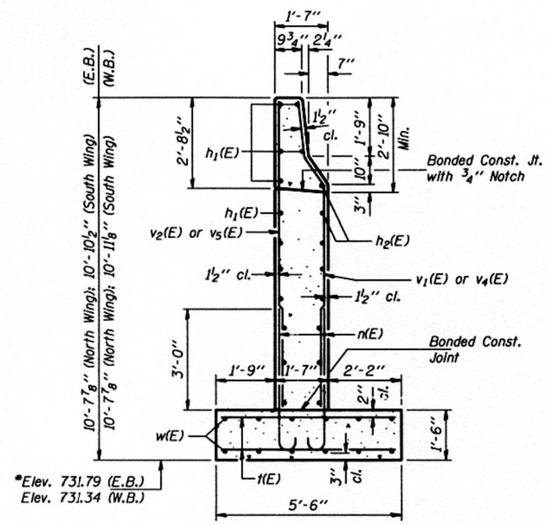

*Elev. 731.79 (E.B.)
Elev. 731.34 (W.B.)

*Match existing bottom of footing elevation.

SECTION B-B

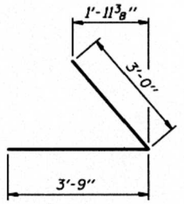

BAR h3(E)

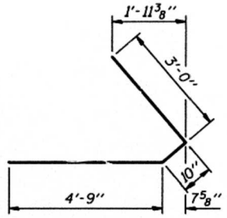

BAR h4(E)

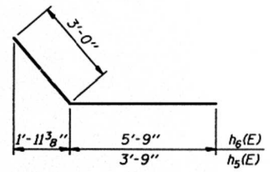

BARS h5(E) & h6(E)

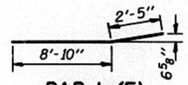

BAR h2(E)

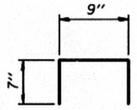

BAR u(E)

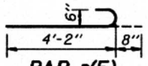

BAR n(E)

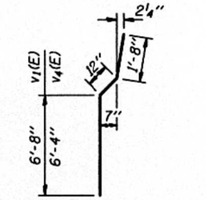

BARS v1(E) & v4(E)

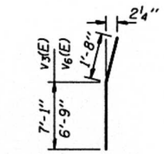

BARS v3(E) & v6(E)

WEST ABUTMENTS BILL OF MATERIAL

Bar	No.	Size	Length	Shape
h(E)	6	#6	47'-1"	
h1(E)	48	#4	11'-3"	
h2(E)	32	#4	11'-3"	
h3(E)	10	#6	6'-9"	
h4(E)	10	#6	8'-7"	
h5(E)	10	#6	6'-9"	
h6(E)	10	#6	8'-9"	
h7(E)	2	#5	47'-1"	
n(E)	96	#6	4'-10"	
t(E)	96	#4	5'-3"	
u(E)	90	#5	1'-11"	
v(E)	96	#5	1'-10"	
v1(E)	18	#6	9'-4"	
v2(E)	24	#6	9'-2"	
v3(E)	6	#6	8'-9"	
v4(E)	18	#6	9'-0"	
v5(E)	24	#6	8'-10"	
v6(E)	6	#6	8'-5"	
w(E)	48	#4	11'-3"	
w1(E)	24	#4	2'-2"	
Structure Excavation			Cu. Yd.	100.7
Concrete Structures			Cu. Yd.	32.9
Reinforcement Bars, Epoxy Coated			Pound	4680
Bridge Seat Sealer			Sq. Ft.	247

Reinforcement bars designated (E) shall be epoxy coated.
Maximum footing pressure under wingwall = 1.6 KSF.
All edges shall have ¾" chamfer except as noted.

DESIGNED	Nicholas J. Sovell
CHECKED	Chad Fuesting
DRAWN	Michael R. Gillette
CHECKED	C.J.F. N.J.S.

January 26, 2000
EXAMINED Thomas J. Domagalski
ENGINEER OF BRIDGE DESIGN
PASSED Ralph E. Anderson
ENGINEER OF BRIDGES AND STRUCTURES

FOR INFORMATION ONLY

WEST ABUTMENTS
F.A.I. RTE. 74 - SEC. 90(15VB-1)I-1
TAZEWELL COUNTY
STATION 644+27.11

MODEL: Default
FILE NAME: P:\2019\190388\W06 I-74 Bridge PSE\v4 CADD - DWG\4.4 Struc\0900021-0022\0900021-0022-68F54-026 Existing Abutment.dgn

TWM ENGINEERING GEOSPATIAL SERVICES
TWM, INC.
WWW.TWM-INC.COM
IL DESIGN FIRM LICENSE NO: 184-001220

USER NAME = ckoltveit	DESIGNED - NP	REVISED -	
	CHECKED - ALN	REVISED -	
PLOT SCALE = 0:2.0000 ':" / in.	DRAWN - NP	REVISED -	
PLOT DATE = 12/1/2020	CHECKED - ALN	REVISED -	

STATE OF ILLINOIS
DEPARTMENT OF TRANSPORTATION

EXISTING ABUTMENT
SN 090-0021 & 090-0022
SHEET 26 OF 30 SHEETS

F.A.I. RTE.	SECTION	COUNTY	TOTAL SHEETS	SHEET NO.
74	90-15[HB(1-4);VB;B]BP,BJR,BRR	TAZEWELL	192	107
		CONTRACT NO. 68F54		
		ILLINOIS	FED. AID PROJECT	

Notes: Hatched area to be poured after superstructure forms have been removed. Quantity of concrete for hatched area is included with Concrete Superstructure on sheet 7 of 22.
Reinforcement bars designated (E) shall be epoxy coated.
For anchor bolt installation details see sheet 13 of 22.
For concrete removal details see sheet 14 of 22.
Work this sheet with sheets 19 and 20 of 22.

STATE OF ILLINOIS
DEPARTMENT OF TRANSPORTATION

ROUTE NO.	SECTION	COUNTY	TOTAL SHEETS	SHEET NO.
F.A.I. 74	90 (15VB-1) I-1	TAZEWELL	101	72
FED. ROAD DIST. NO. 7	ILLINOIS	FED. AID PROJECT-		

SHEET NO. 18
22 SHEETS

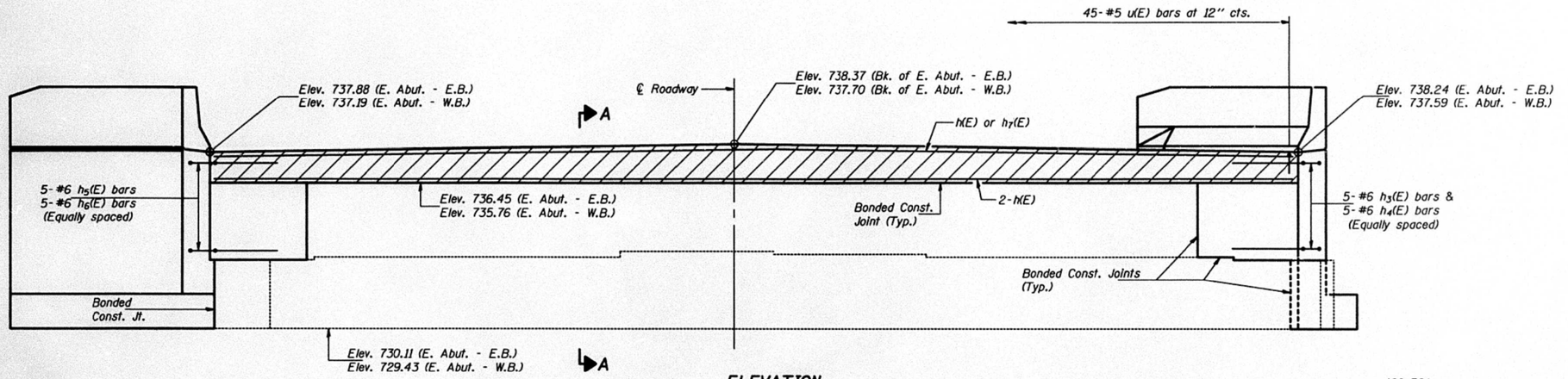

ELEVATION
(Looking West)

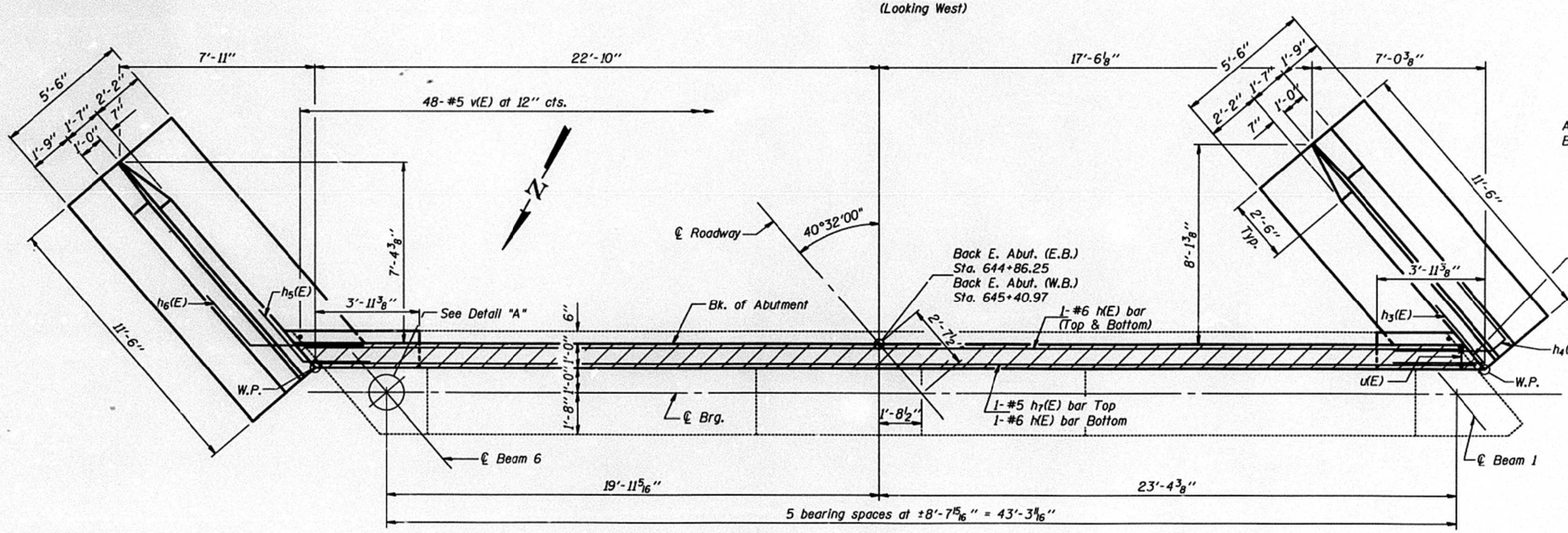

TOP VIEW

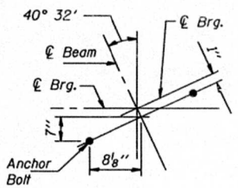

DETAIL "A"

DESIGNED	Nicholas J. Sovell
CHECKED	Chad Fuesting
DRAWN	Michael R. Gillette
CHECKED	C.J.F. N.J.S.

January 26, 2000
EXAMINED Thomas J. Domagalski
ENGINEER OF BRIDGE DESIGN
PASSED Ralph E. Anderson
ENGINEER OF BRIDGES AND STRUCTURES

FOR INFORMATION ONLY

EAST ABUTMENTS
F.A.I. RTE. 74 - SEC. 90(15VB-1)I-1
TAZEWELL COUNTY
STATION 644+27.11

MODEL: Default
FILE NAME: P:\2019\190388\WG6 I-74 Bridge PSES4 CADD - DWG\4.4 Struct\0900021-0022\0900021-0022-68F54-027 Existing Abutment.dgn

TWM ENGINEERING GEOSPATIAL SERVICES
TWM, INC.
WWW.TWM-INC.COM
IL DESIGN FIRM LICENSE NO: 184-001220

USER NAME = ckoltveit	DESIGNED - NP	REVISED -	
	CHECKED - ALN	REVISED -	
PLOT SCALE = 0:2.0000 ':' / in.	DRAWN - NP	REVISED -	
PLOT DATE = 12/1/2020	CHECKED - ALN	REVISED -	

STATE OF ILLINOIS
DEPARTMENT OF TRANSPORTATION

EXISTING ABUTMENT
SN 090-0021 & 090-0022
SHEET 27 OF 30 SHEETS

F.A.I. RTE.	SECTION	COUNTY	TOTAL SHEETS	SHEET NO.
74	90-15[HB(1-4);VB;B]BP,BJR,BRR	TAZEWELL	192	108
		CONTRACT NO. 68F54		
		ILLINOIS	FED. AID PROJECT	

STATE OF ILLINOIS
DEPARTMENT OF TRANSPORTATION

ROUTE NO.	SECTION	COUNTY	TOTAL SHEETS	SHEET NO.
F.A.I. 74	90 (15VB-1) I-1	TAZEWELL	101	73
FED. ROAD DIST. NO. 7		ILLINOIS	FED. AID PROJECT-	

SHEET NO. 19
22 SHEETS

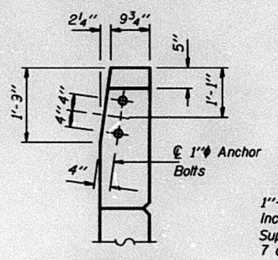

VIEW D-D
(E.B. Bridge Only)

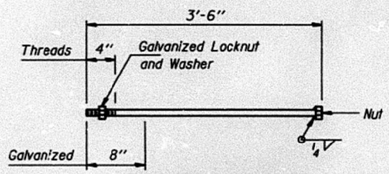

1" ϕ ANCHOR BOLT

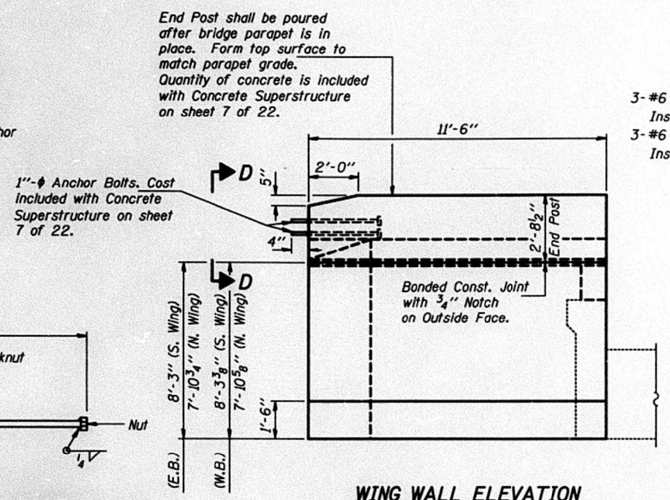

WING WALL ELEVATION

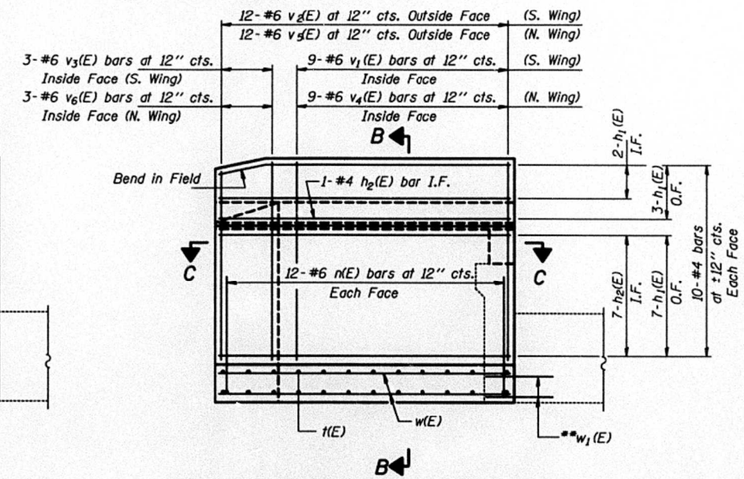

WING WALL ELEVATION
Reinforcement

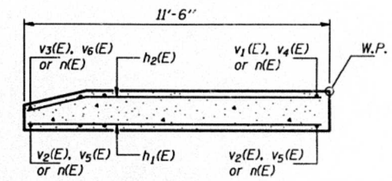

SECTION C-C

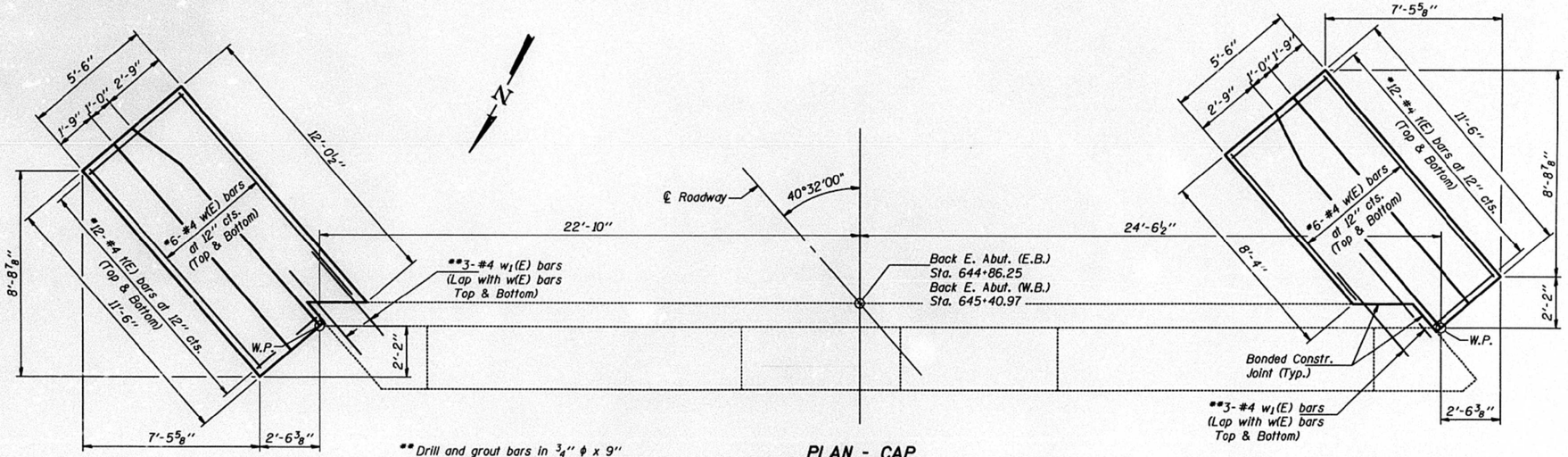

** Drill and grout bars in ¾" ϕ x 9" min. drilled holes according to Art. 584 of the Standard Specifications.

PLAN - CAP

* Cut to fit in field

DESIGNED	Nicholas J. Sovell
CHECKED	Chad Fuesting
DRAWN	Michael R. Gillette
CHECKED	C.J.F. N.J.S.

January 26, 2000
EXAMINED Thomas J. Domagalski
ENGINEER OF BRIDGE DESIGN
PASSED Ralph E. Anderson
ENGINEER OF BRIDGES AND STRUCTURES

FOR INFORMATION ONLY

EAST ABUTMENTS
F.A.I. RTE. 74 - SEC. 90(15VB-1)I-1
TAZEWELL COUNTY
STATION 644+27.11

MODEL: Default
FILE NAME: P:\2019\1903BBWO6 I-74 Bridge PSE\v4 CADD - DWG\4.4 Struc\0900021-0022\0900021-0022-68F54-028_Existing Abutment.dgn

TWM ENGINEERING GEOSPATIAL SERVICES
TWM, INC.
WWW.TWM-INC.COM
IL DESIGN FIRM LICENSE NO: 184-001220

USER NAME = ckoltveit	DESIGNED - NP	REVISED -	
	CHECKED - ALN	REVISED -	
PLOT SCALE = 0:2.0000 ':' / in.	DRAWN - NP	REVISED -	
PLOT DATE = 12/1/2020	CHECKED - ALN	REVISED -	

STATE OF ILLINOIS
DEPARTMENT OF TRANSPORTATION

EXISTING ABUTMENT
SN 090-0021 & 090-0022
SHEET 28 OF 30 SHEETS

F.A.I. RTE.	SECTION	COUNTY	TOTAL SHEETS	SHEET NO.
74	90-15[HB(1-4);VB;B]BP,BJR,BRR	TAZEWELL	192	109
		CONTRACT NO. 68F54		
		ILLINOIS	FED. AID PROJECT	

ROUTE NO.	SECTION	COUNTY	TOTAL SHEETS	SHEET NO.
F.A.I. 74	90 (15VB-1) I-1	TAZEWELL	101	74
FED. ROAD DIST. NO. 7		ILLINOIS	FED. AID PROJECT-	

SHEET NO. 20
22 SHEETS

STATE OF ILLINOIS
DEPARTMENT OF TRANSPORTATION

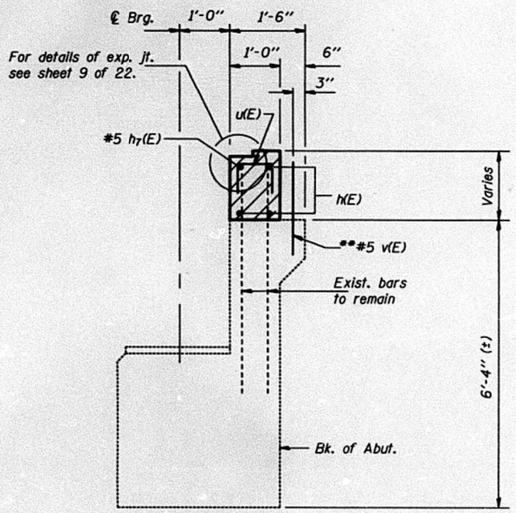

SECTION A-A
(Dimensions at Rt. L's)

** Drill & grout bars in 7/8" ϕ x 6" drilled holes according to Article 584 of the Standard Specifications.

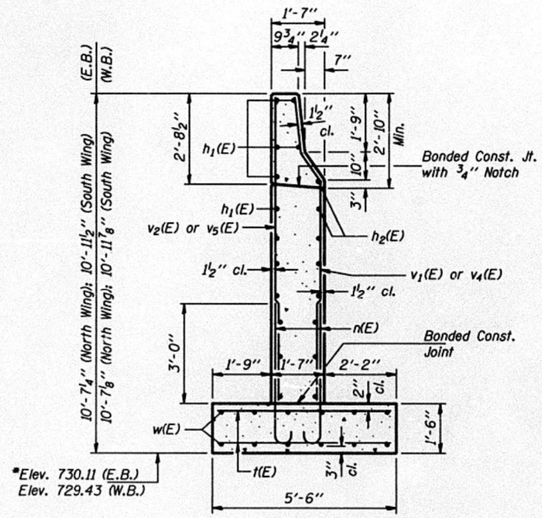

SECTION B-B

*Match existing bottom of footing elevation.

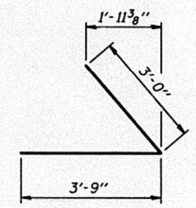

BAR h3(E)

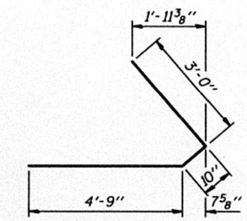

BAR h4(E)

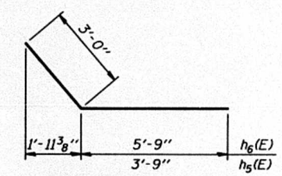

BARS h5(E) & h6(E)

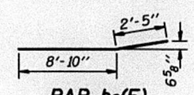

BAR h2(E)

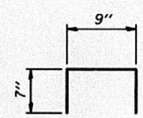

BAR u(E)

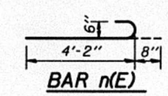

BAR n(E)

EAST ABUTMENTS BILL OF MATERIAL

Bar	No.	Size	Length	Shape
h(E)	6	#6	47'-1"	
h1(E)	48	#4	11'-3"	
h2(E)	32	#4	11'-3"	
h3(E)	10	#6	6'-9"	
h4(E)	10	#6	8'-7"	
h5(E)	10	#6	6'-9"	
h6(E)	10	#6	8'-9"	
h7(E)	2	#5	47'-1"	
n(E)	96	#6	4'-10"	
t(E)	96	#4	5'-3"	
u(E)	90	#5	1'-11"	
v(E)	96	#5	1'-10"	
v1(E)	18	#6	9'-4"	
v2(E)	24	#6	9'-2"	
v3(E)	6	#6	8'-9"	
v4(E)	18	#6	9'-0"	
v5(E)	24	#6	8'-10"	
v6(E)	6	#6	8'-5"	
w(E)	48	#4	11'-3"	
w1(E)	24	#4	2'-2"	
Structure Excavation			Cu. Yd.	100.7
Concrete Structures			Cu. Yd.	32.9
Reinforcement Bars, Epoxy Coated			Pound	4680
Bridge Seat Sealer			Sq. Ft.	247

Reinforcement bars designated (E) shall be epoxy coated.
Maximum footing pressure under wingwall = 1.6 KSF.
All edges shall have 3/4" chamfer except as noted.

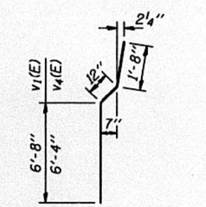

BARS v1(E) & v4(E)

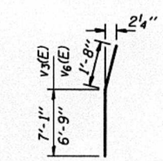

BARS v3(E) & v6(E)

DESIGNED	Nicholas J. Sovell
CHECKED	Chad Fuesting
DRAWN	Michael R. Gillette
CHECKED	C.J.F. N.J.S.

January 26, 2000
EXAMINED Thomas J. Domagalski
ENGINEER OF BRIDGE DESIGN
PASSED Robert F. Anderson
ENGINEER OF BRIDGES AND STRUCTURES

FOR INFORMATION ONLY

EAST ABUTMENTS
F.A.I. RTE. 74 - SEC. 90(15VB-1)I-1
TAZEWELL COUNTY
STATION 644+27.11

MODEL: Default
FILE NAME: P:\2019\190388\W06 I-74 Bridge PSEs\4 CADD - DWG\4.4 Struc\0900021-0022\0900021-0022-68F54-029 Existing Abutment.dgn

TWM ENGINEERING GEOSPATIAL SERVICES
TWM, INC.
WWW.TWM-INC.COM
IL DESIGN FIRM LICENSE NO: 184-001220

USER NAME = ckoltveit	DESIGNED - NP	REVISED -	
	CHECKED - ALN	REVISED -	
PLOT SCALE = 0:2.0000 ':" / in.	DRAWN - NP	REVISED -	
PLOT DATE = 12/1/2020	CHECKED - ALN	REVISED -	

STATE OF ILLINOIS
DEPARTMENT OF TRANSPORTATION

EXISTING ABUTMENT
SN 090-0021 & 090-0022
SHEET 29 OF 30 SHEETS

F.A.I. RTE.	SECTION	COUNTY	TOTAL SHEETS	SHEET NO.
74	90-15(HB(1-4);VB;B)BP,BJR,BRR	TAZEWELL	192	110
		CONTRACT NO. 68F54		
	ILLINOIS	FED. AID PROJECT		

STATE OF ILLINOIS
DEPARTMENT OF PUBLIC WORKS & BUILDINGS
DIVISION OF HIGHWAYS

ROUTE No.	SEC.	COUNTY	TOTAL SHEETS	SHEET NO.
F.A.I-74	90-15 VB	TAZEWELL	23	7
FED. ROAD DIST. No. 7	ILLINOIS			

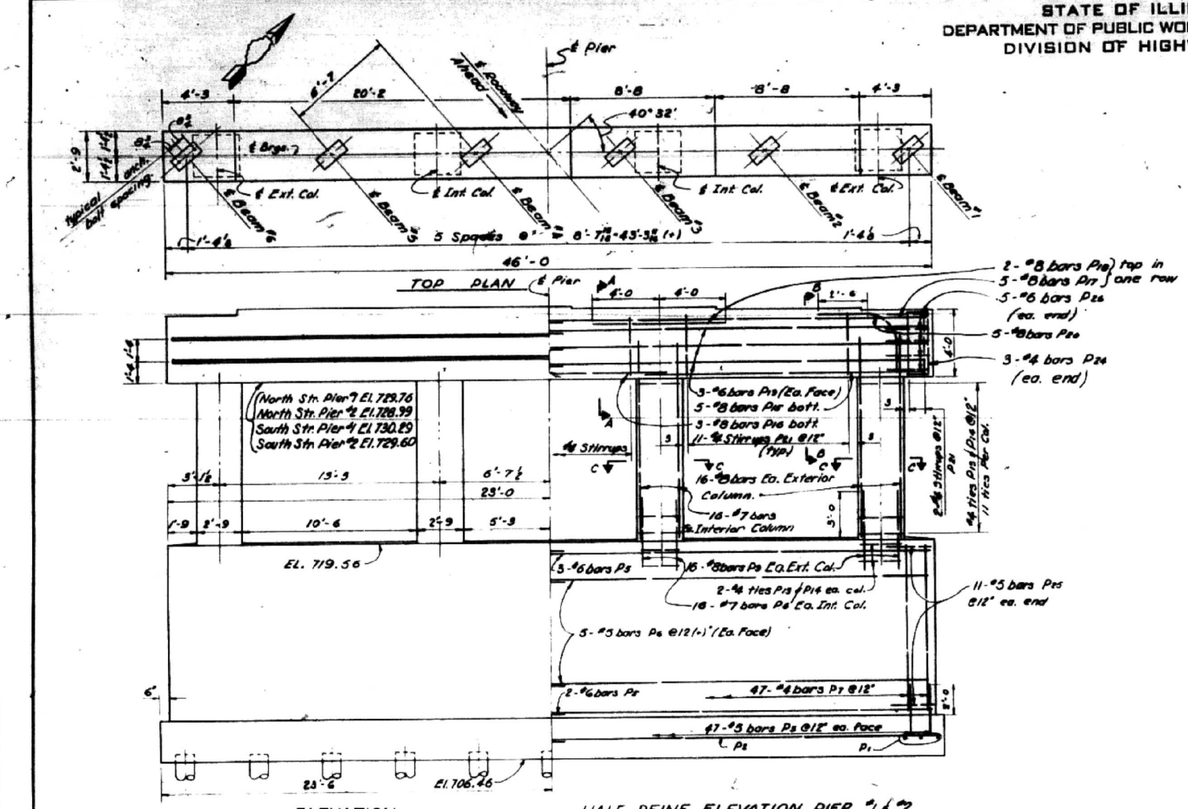

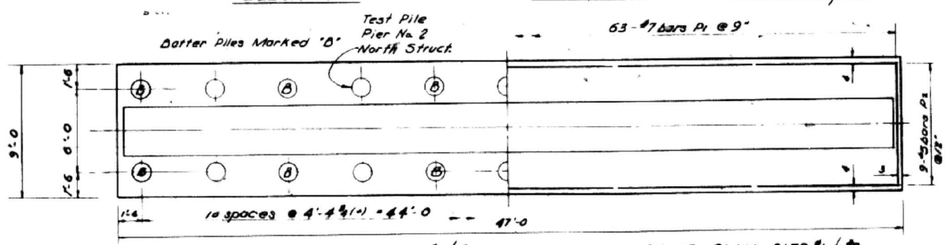

HALF PILE PLAN PIER #1 & #2

HALF REINF. PLAN PIER #1 & #2

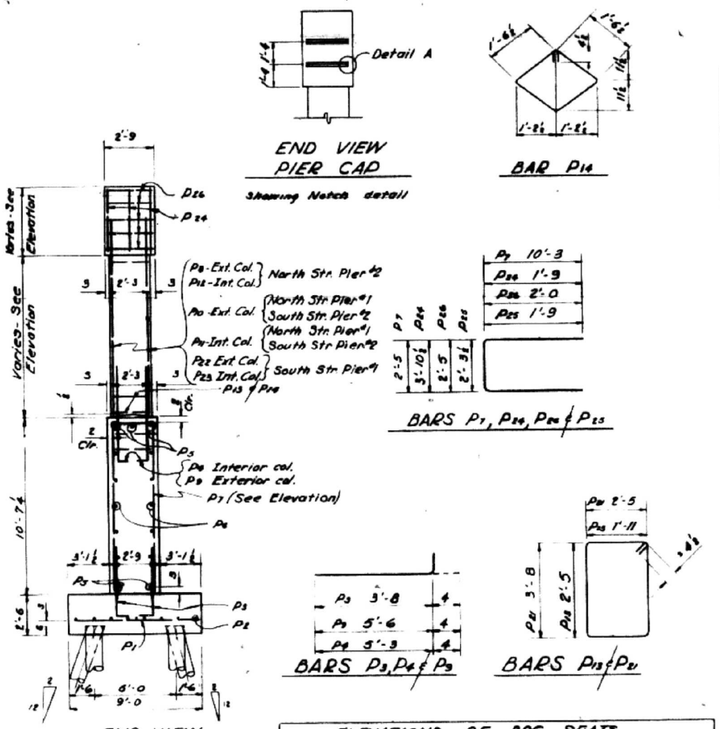

BILL OF MATERIAL - 4 PIERS				
Bar	No.	Size	Length	Shape
P1	252	#7	8'-6	
P2	72	#5	24'-3	
P3	376	#5	6'-0	
P4	128	#7	5'-7	
P5	40	#6	28'-10	
P6	80	#5	23'-8	
P7	188	#6	28'-11	
P8	32	#8	12'-0	
P9	128	#8	3'-10	
P10	64	#8	12'-9	
P11	64	#7	12'-9	
P12	32	#7	12'-0	
P13	208	#4	3'-8	
P14	208	#4	6'-11	
P15	40	#8	18'-9	
P16	12	#8	14'-4	
P17	40	#8	26'-0	
P18	16	#8	8'-0	
P19	48	#8	23'-10	
P20	40	#8	7'-5	
P21	148	#4	12'-11	
P22	32	#8	19'-2	
P23	32	#7	19'-2	
P24	24	#4	7'-4½	
P25	40	#6	6'-5	
P26	88	#5	5'-9½	
Class X Concrete			Cu. Yds.	472.0
Reinforcement Bars			Lbs.	57400
Class A Excavation			Cu. Yds.	1001
Concrete Piles			Lin. ft.	5306
Test Piles			Ea.	1

ELEVATIONS OF BRG. SEATS				
beam	Pier #1 north structure	Pier #2 north structure	Pier #1 south structure	Pier #2 south structure
1	733.76	732.99	734.29	733.60
2	733.91	733.14	734.42	733.75
3	734.03	733.28	734.54	733.88
4	734.09	733.35	734.59	733.93
5	734.07	733.34	734.57	733.92
6	734.04	733.32	734.55	733.89

PILE DATA

type	concrete
Capacity	30 tons
Est. length	38'-0
No. Req'd. (4 piers)*	88

* includes one test pile in Pier 2 (North Structure)

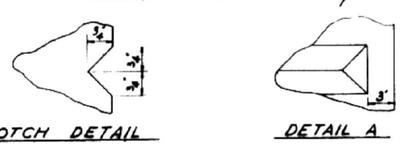

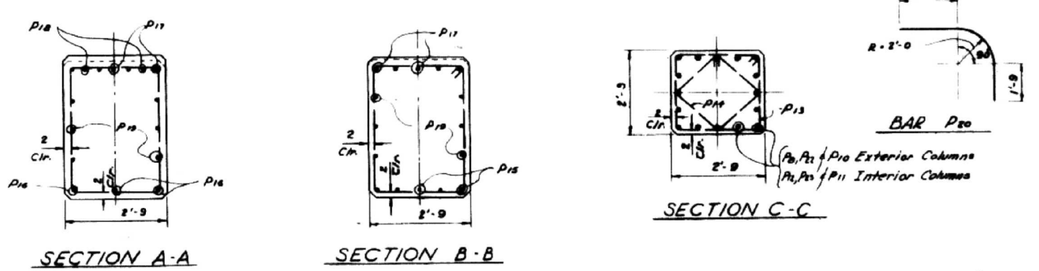

DESIGNED	E.L.
CHECKED	M.B.
DRAWN	H.C. GRAFF.
CHECKED	M.B.

EXAMINED
DIRECTOR OF DESIGN AND TRAFFIC STRUCTURE
PASSED
ENGINEER OF BRIDGES
APPROVED
CHIEF ENGINEER

FOR INFORMATION ONLY

PIERS
F.A.I. RT. 74 - SECTION 90-15 VB
F.A.I. RT. 74 OVER A.T. & S.F. RR
STA. 644+27.11
TAZEWELL COUNTY

WARREN AND VAN PRAAG, INC.
CONSULTING ENGINEERS - DECATUR, ILLINOIS

3 OF 8

MODEL: Default
FILE NAME: P:\2019\190388\WO6 I-74 Bridge PSEs\4 CADD - DWG\4.4 Struc\0900021-0022\0900021-0022-68F54-030 Existing Pier.dgn

TWM ENGINEERING GEOSPATIAL SERVICES
TWM, INC.
WWW.TWM-INC.COM
IL DESIGN FIRM LICENSE NO: 184-001220

USER NAME = ckoltveit	DESIGNED - NP	REVISED -	
	CHECKED - ALN	REVISED -	
PLOT SCALE = 0:2.0000 ':" / in.	DRAWN - NP	REVISED -	
PLOT DATE = 12/1/2020	CHECKED - ALN	REVISED -	

STATE OF ILLINOIS
DEPARTMENT OF TRANSPORTATION

EXISTING PIER
SN 090-0021 & 090-0022
SHEET 30 OF 30 SHEETS

F.A.I. RTE.	SECTION	COUNTY	TOTAL SHEETS	SHEET NO.
74	90-15(HB(1-4);VB;B)BP,BJR,BRR	TAZEWELL	192	111
		CONTRACT NO. 68F54		
	ILLINOIS	FED. AID PROJECT		

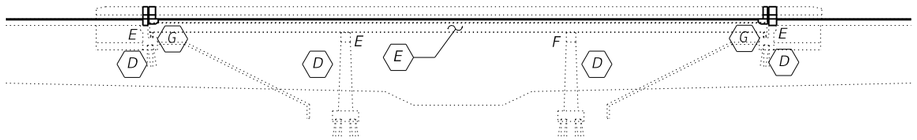

ELEVATION

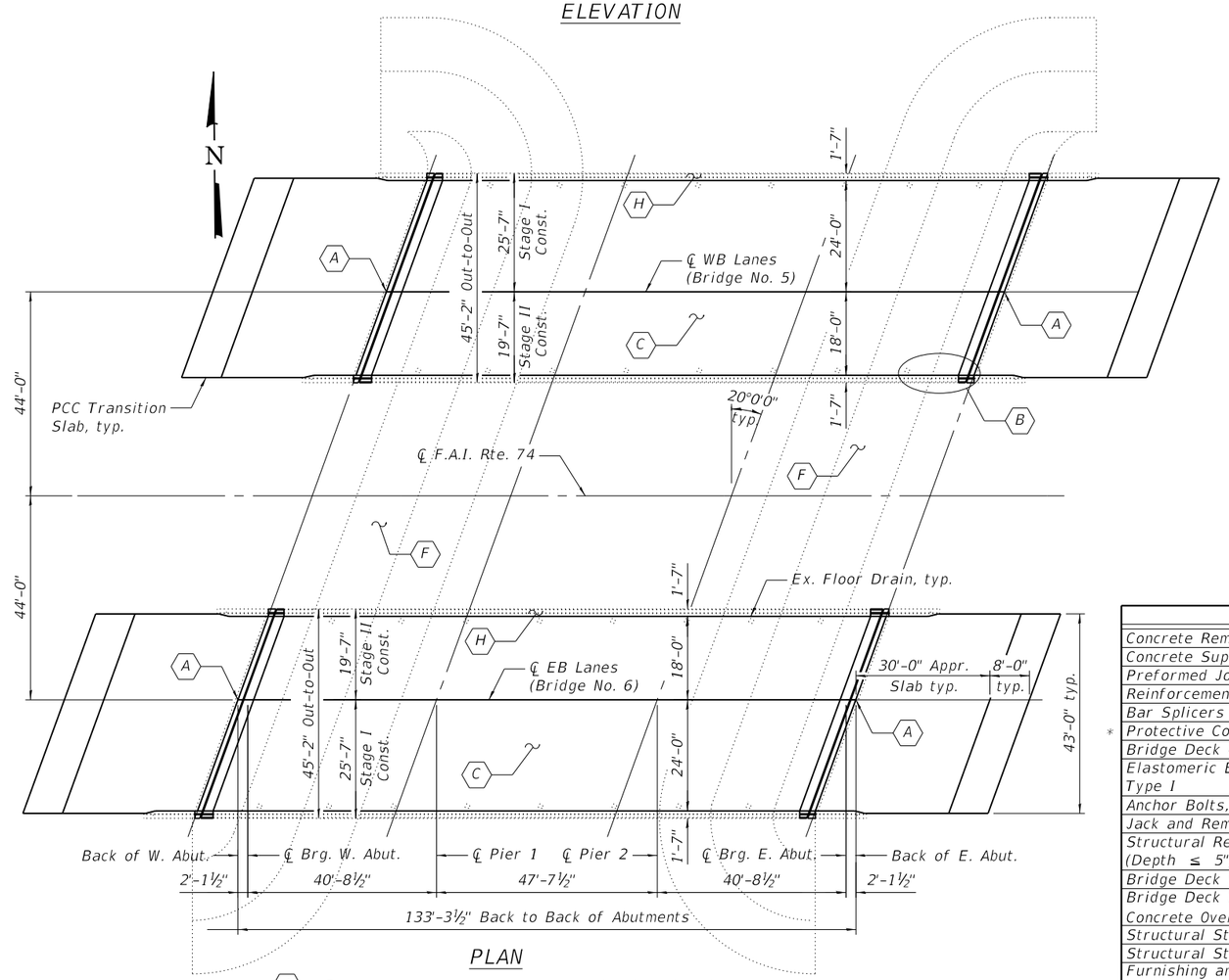

PLAN

(A) – Remove and replace expansion joints at abutments

(B) – Beam End Repair

(C) – ¾" Bridge Deck Scarification & 2¼" Microsilica Overlay on bridge deck, approach slab, and transition pavement

(D) – Concrete repair of abutments & piers

(E) – Clean and paint all structural steel and bearings

(F) – Slopewall Repairs

(G) – Remove & replace bearings at abutments

(H) – Apply Protective Coat (Special) to the top and inside surfaces of the parapets

INDEX OF SHEETS

LICENSED STRUCTURAL ENGINEER
ANGELA L. NEMSKY
081-005503
STATE OF ILLINOIS

Angela L. Nemsky
12/01/2020
EXPIRES 11/30/2022

TOTAL BILL OF MATERIAL

	ITEM	UNIT	SUPER	SUB	TOTAL
	Concrete Removal	Cu. Yd.	26.2		26.2
	Concrete Superstructure	Cu. Yd.	28.8		28.8
	Preformed Joint Strip Seal	Foot	187		187
	Reinforcement Bars, Epoxy Coated	Pound	3000		3000
	Bar Splicers	Each	48		48
*	Protective Coat	Sq. Yd.	1789		1789
	Bridge Deck Grooving	Sq. Yd.	1700		1700
	Elastomeric Bearing Assembly, Type I	Each		36	36
	Anchor Bolts, 1"	Each		72	72
	Jack and Remove Existing Bearings	Each		36	36
	Structural Repair of Concrete (Depth ≤ 5")	Sq. Ft.		63.2	63.2
	Bridge Deck Scarification, ¾"	Sq. Yd.	1908		1908
	Bridge Deck Microsilica Concrete Overlay, 2¼"	Sq. Yd.	1908		1908
	Structural Steel Removal	Pound	240		240
	Structural Steel Repair	Pound	140		140
	Furnishing and Erecting Structural Steel	Pound	240	1000	1240
	Slope Wall Removal	Sq. Yd.		134	134
	Slope Wall, 6"	Sq. Yd.		134	134
	Containment and Disposal of Lead Paint Cleaning Residues No. 5	L. Sum	1		1
	Containment and Disposal of Lead Paint Cleaning Residues No. 6	L. Sum	1		1
	Cleaning and Painting Steel Bridge No. 5	L. Sum	1		1
	Cleaning and Painting Steel Bridge No. 6	L. Sum	1		1
**	Protective Coat (Special)	Sq. Yd.	444		444
	Surface Filler (Special)	Gallon	7		7

* Apply to new concrete and overlay only. (Bridge & Appr. Slab)
** Apply to parapets only. (Bridge & Appr. Slab)

GENERAL NOTES

All structural steel shall conform to AASHTO Classification M-270 Gr. 36, unless otherwise noted.

All new fasteners shall be high strength bolts. Holes shall be 13/16" dia. for ¾" dia. bolts, unless otherwise noted.

Plan dimensions and details relative to existing plans are subject to nominal construction variations. The Contractor shall field verify existing dimensions and details affecting new construction and make necessary approved adjustments prior to construction or ordering of materials. Such variations shall not be cause for additional compensation for a change in scope of work, however, the Contractor will be paid for the quantity actually furnished at the unit price bid for the work.

Reinforcement bars designated (E) shall be epoxy coated.

Prior to pouring new concrete, all heavy or loose rust, loose mill scale, and other loose or potentially detrimental foreign material shall be removed from the surfaces in contact with concrete. Tightly adhered paint may remain unless otherwise noted. Removal shall be accomplished by methods that will not damage the steel and the cost will be included in the pay item covering removal of existing concrete.

Existing reinforcement bars extending into the removal area shall be cleaned, straightened, and incorporated into the new construction. Any reinforcement bars that are damaged during concrete removal shall be replaced with an approved bar splicer or anchorage system. Cost included with Concrete Removal.

Joint openings shall be adjusted according to Article 520.04 of the Std. Specs. when the deck is poured at an ambient temperature other than 50° F.

The existing structural steel coating contains lead. The Contractor shall take appropriate precautions to deal with the presence of lead on this project.

Cleaning and painting of the existing structural steel shall be as specified in the special provision for "Cleaning and Painting Existing Steel Structures". All beams, bearings, and other structural steel shall be cleaned per Near White Blast Cleaning (SSPC-SP10). The exterior surfaces and bottom of the bottom flange of the fascia beams shall be cleaned per Commercial Grade Power Tool Cleaning (SSPC-SP15).

The designated areas cleaned per Near White Blast Cleaning (SSPC-SP10) and per Commercial Grade Power Tool Cleaning (SSPC-SP15) shall be painted according to the requirements of paint system 1 – OZ/E/U. The color of the final finish coat for all interior steel surfaces shall be Gray (Munsell No. 5B 7/1). The color of the final finish coat for the exterior and bottom flange of the fascia beams shall be Interstate Green (Munsell No. 7.5G 4/8).

Air monitors are not required at this site. See special provision for "Containment and Disposal of Lead Paint Cleaning Residues".

SSPC QP1 and SSPC QP2 Certification is required for this Contract.

Care shall be taken not to damage rubber bearing or joint components during blasting and cleaning operations. Any damage to these components shall be repaired at the contractor's expense.

Existing structural steel that will be in contact with new structural steel shall be cleaned and painted prior to erection as required by the Special Provision "Cleaning and Painting Contact Surface Areas of Existing Steel Structures".

The Inorganic Zinc Rich Primer / Acrylic / Acrylic Paint System shall be used for shop and field painting of new structural steel except where otherwise noted. The color of the final finish coat for all interior steel surfaces shall be Gray, Munsell No. 5B 7/1. The color of the final finish coat for the exterior and bottom flange of the fascia beams shall be Interstate Green (Munsell No. 7.5G 4/8). Cost included with Structural Steel Repair.

MODEL: Default
FILE NAME: P:\2019\190388\W06-F74 Bridge PSE\v4 CADD - DWG\4.4 Struc\09000023-0024\0900023_0024-68F54-001_General Plan and Elevation.dgn

TWM ENGINEERING GEOSPATIAL SERVICES	TWM, INC. WWW.TWM-INC.COM	USER NAME = ckoltveit	DESIGNED - CDK	REVISED -	STATE OF ILLINOIS DEPARTMENT OF TRANSPORTATION
			CHECKED - ALN	REVISED -	
	IL DESIGN FIRM LICENSE NO: 184-001220	PLOT SCALE = 0:2.0000 ':" / in.	DRAWN - CDK	REVISED -	
		PLOT DATE = 12/1/2020	CHECKED - ALN	REVISED -	

GENERAL PLAN & ELEVATION
SN 090–0023 & SN 090–0024
SHEET 1 OF 33 SHEETS

F.A.I. RTE.	SECTION	COUNTY	TOTAL SHEETS	SHEET NO.
74	90-15[HB(1-4);VB:B]BP,BJR,BRR	TAZEWELL	192	112
		CONTRACT NO. 68F54		
		ILLINOIS	FED. AID PROJECT	

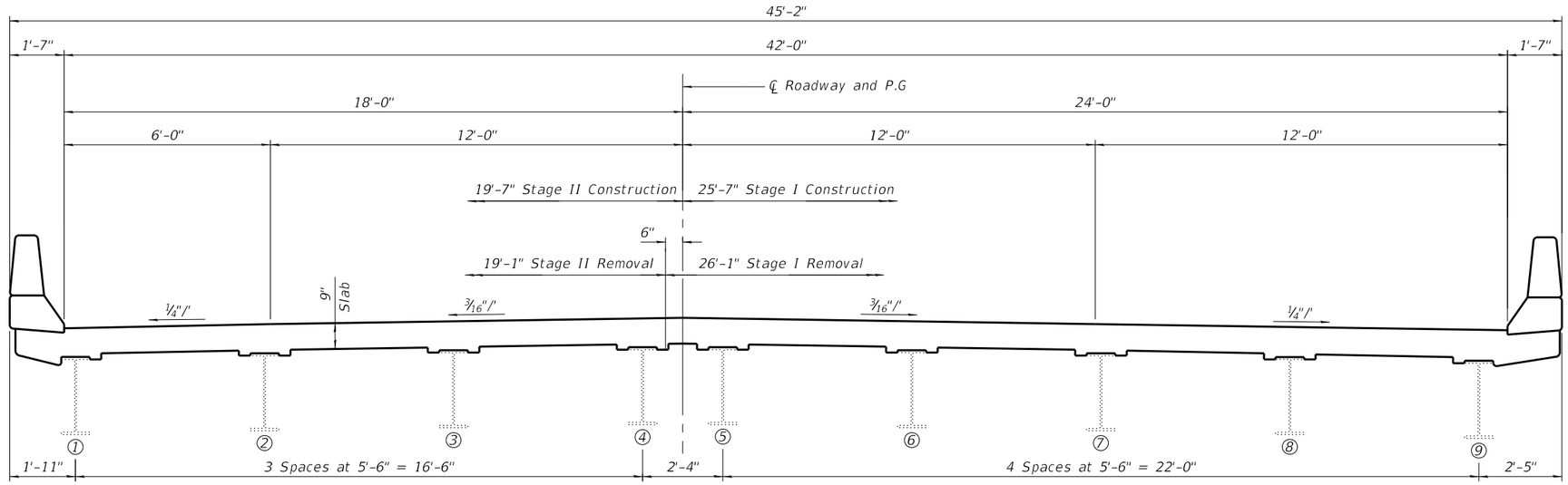

CROSS SECTION AT ABUTMENT

(Looking East – E. Bound Lanes S.N. 090-0023)
(Looking West – W. Bound Lanes S.N. 090-0024)

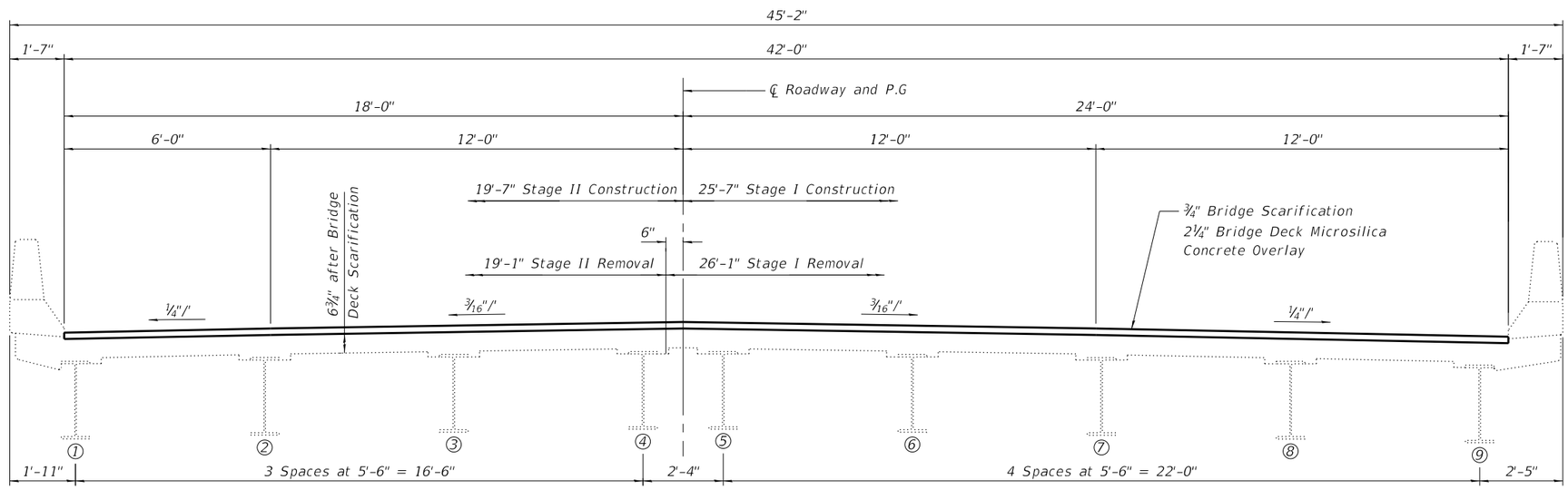

CROSS SECTION AT MIDSPAN

(Looking East – E. Bound Lanes S.N. 090-0023)
(Looking West – W. Bound Lanes S.N. 090-0024)

MODEL: Default
FILE NAME: P:\2019\190338\WO6 I-74 Bridge PSEs\4 CADD - DWG\4.4 Struc\0900023-0024\0900023-0024-68F54-002 Cross Section 0023 and 0024.dgn

TWM ENGINEERING & GEOSPATIAL SERVICES	TWM, INC. WWW.TWM-INC.COM IL DESIGN FIRM LICENSE NO: 184-001220	USER NAME = ckoltveit	DESIGNED - DRA	REVISED -	STATE OF ILLINOIS DEPARTMENT OF TRANSPORTATION	BRIDGE CROSS SECTIONS SN. 090–0023 AND SN. 090–0024	F.A.I. RTE.	SECTION	COUNTY	TOTAL SHEETS	SHEET NO.
			CHECKED - CDK	REVISED -			74	90-15[HB(1-4);VB;B]BP,BJR,BRR	TAZEWELL	192	113
		PLOT SCALE = 0:2.0000 ':" / in.	DRAWN - DRA	REVISED -					CONTRACT NO. 68F54		
		PLOT DATE = 12/1/2020	CHECKED - CDK	REVISED -		SHEET 2 OF 33 SHEETS		ILLINOIS	FED. AID PROJECT		

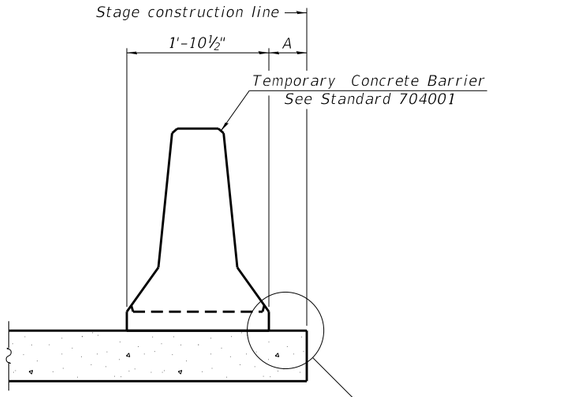

When "A" is 3'-1" or less, the temporary concrete barrier shall be restrained to the new slab according to Detail I, II or III. No restraint is required when "A" is greater than 3'-1".

NEW SLAB OR NEW DECK BEAM

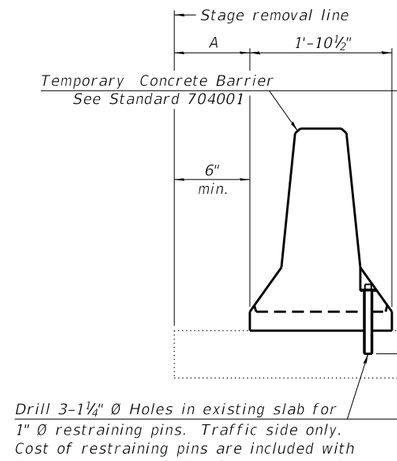

Drill 3-1¼" Ø Holes in existing slab for 1" Ø restraining pins. Traffic side only. Cost of restraining pins are included with Temporary Concrete Barrier. No restraint is required when "A" is greater than 3'-1".

EXISTING SLAB

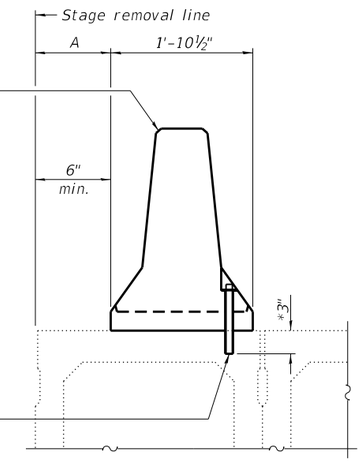

* When hot-mix asphalt wearng surface is present, embedment shall be 3" plus the wearing surface depth.

EXISTING DECK BEAM

SECTIONS THRU SLAB OR DECK BEAM

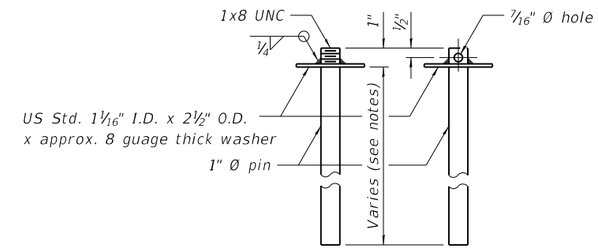

RESTRAINING PIN

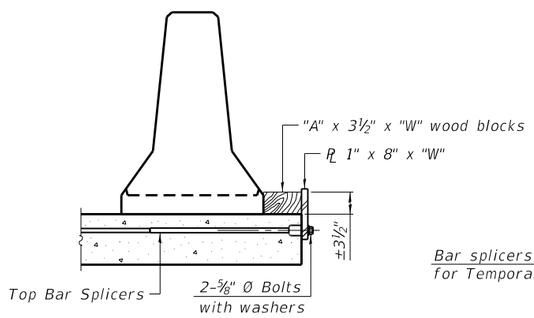

DETAIL I

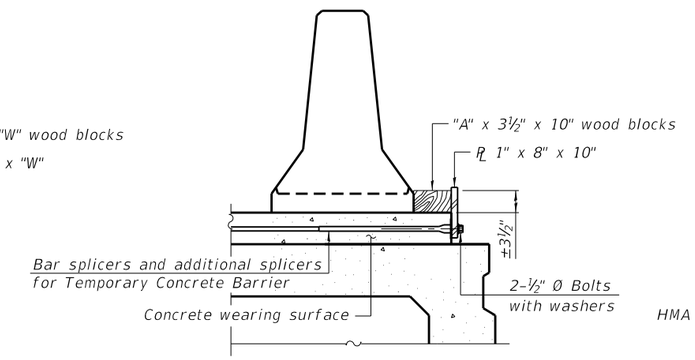

DETAIL II

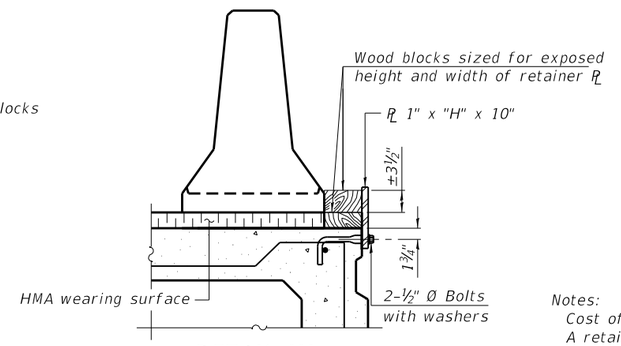

DETAIL III

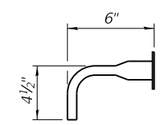

BAR SPLICER FOR #4 BAR - DETAIL III

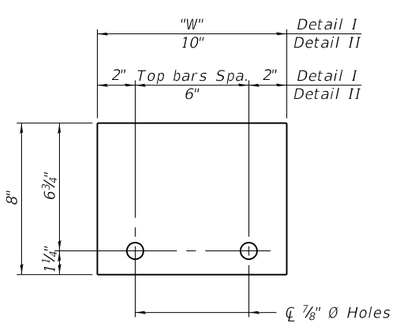

STEEL RETAINER PL 1" x 8" x "W"

(Detail I and II)

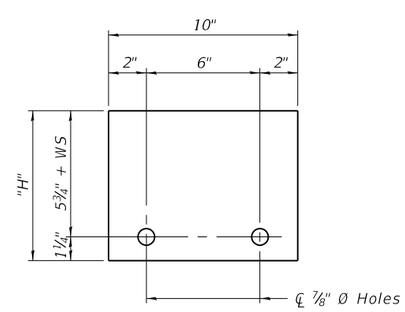

STEEL RETAINER PL 1" x "H" x 10"

(Detail III)

Notes:

Cost of retainer assembly is included with Temporary Concrete Barrier.

A retainer assembly shall be located at the approximate ℄ of each temporary concrete barrier.

The retainer plate shall not be removed until the concrete on the adjacent stage is ready to be poured. For Detail III applications the retainer plate shall not be removed until just prior to placing the adjacent beam.

When the 'A' dimension is less than 1½", the wood block shall be omitted and the barrier shall be placed in direct contact with the steel retainer plate. For deck beam applications the minimum required 'A' distance is 6" to accommodate the shear key clamping device.

Detail I - Installation for a new bridge deck or bridge slab.

Detail II - Installation for a new deck beam with an initial concrete wearing surface. Additional bar splicers shall be provided at 6'-0" centers and paired with the bar splicers of the concrete wearing surface reinforcement to accommodate the installation of the retainer assemblies. The cost of the additional bar splicers is included with the concrete wearing surface.

Detail III - Installation for a new deck beam with no initial wearing surface or with an initial hot-mix asphalt (HMA) wearing surface present. The deck beam directly beneath the temporary concrete barrier shall be fabricated with bar splicer inserts in the side of the beam, as detailed, to accommodate the installation of the retainer assemblies. A pair of bar splicers, 6" apart, shall be placed at 6'-0" centers along the length of the beam. The cost of the bar splicers is included with the deck beam.

See Roadway Plans for quantity.

R-27

2-17-2017

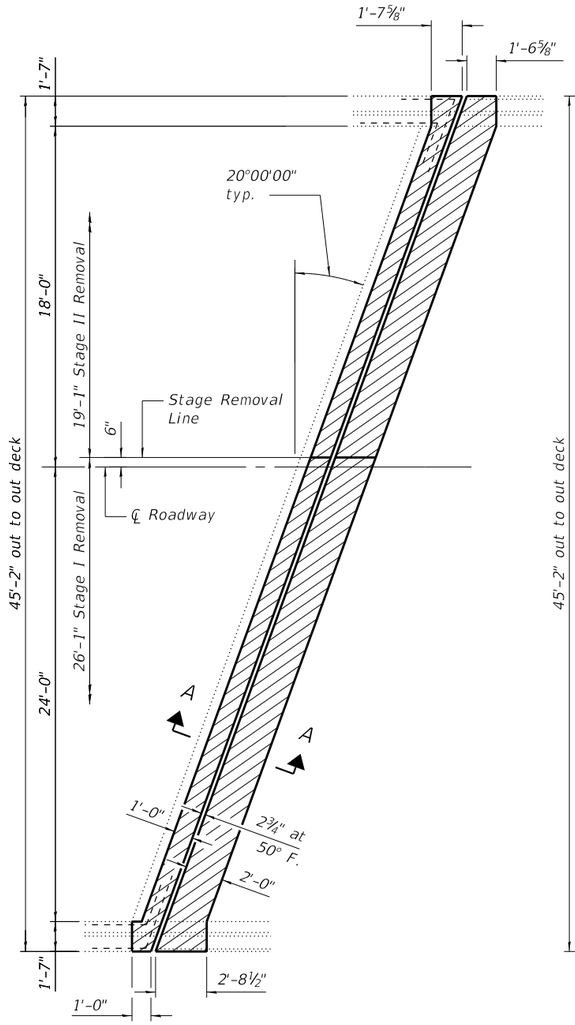

PLAN
CONCRETE REMOVAL AT W. ABUT.

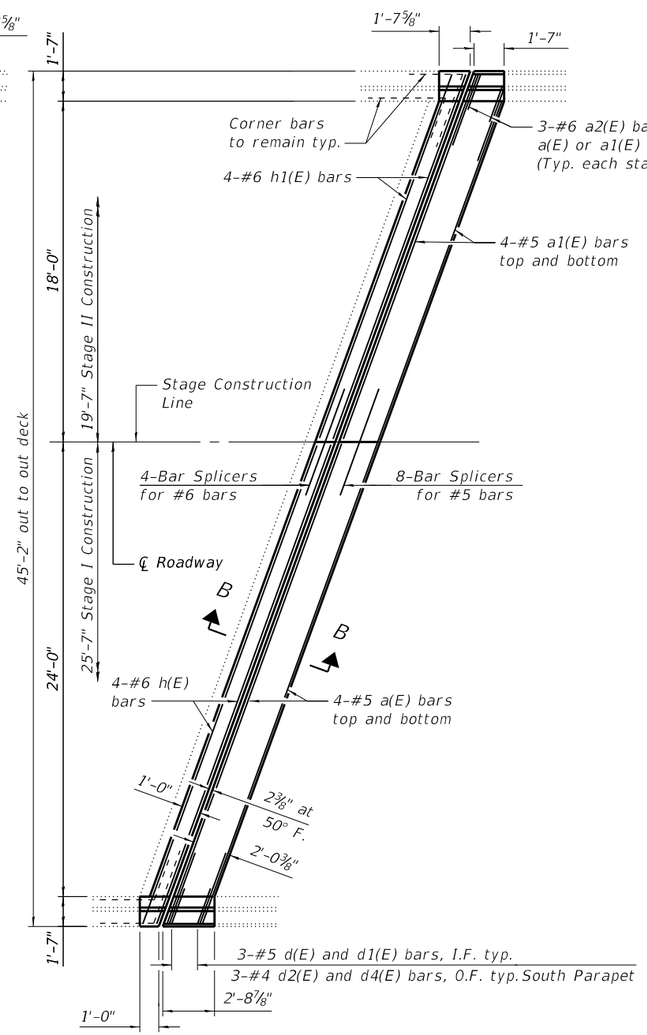

PLAN
CONCRETE REPLACEMENT AT W. ABUT.

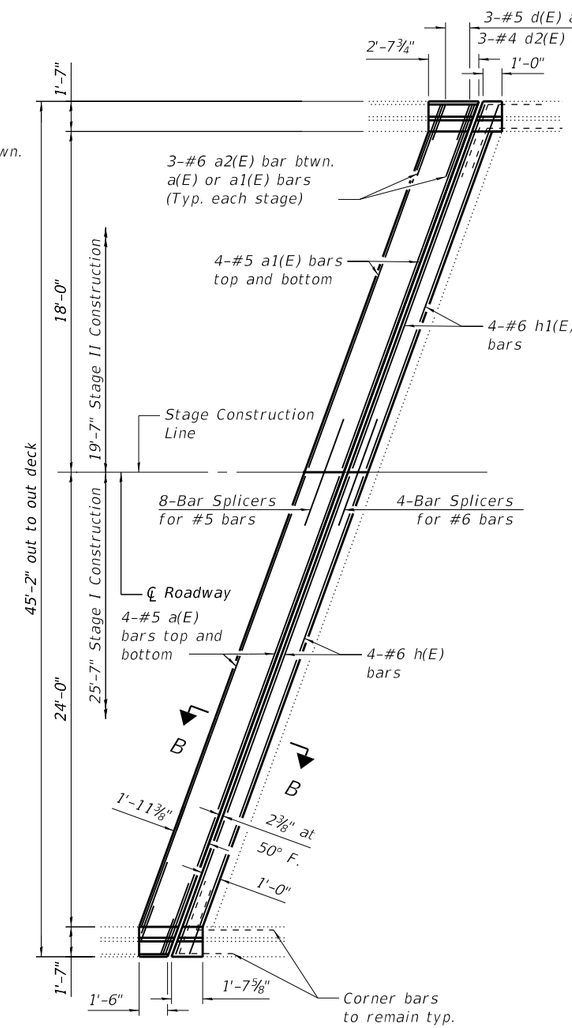

PLAN
CONCRETE REPLACEMENT AT E. ABUT.

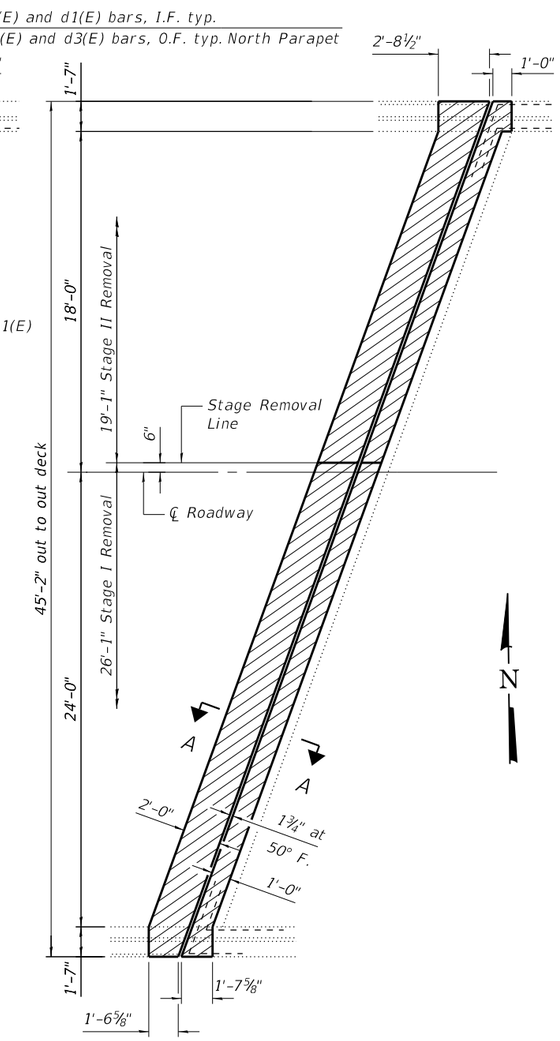

PLAN
CONCRETE REMOVAL AT E. ABUT.

Notes:
Hatched areas indicate Concrete Removal.
For Section views, see Sheet 6 of 33.
Dimensions are based on a Rolled Rail Strip Seal joint. If the contractor elects to use the Welded Rail Strip Seal Joint, deck dimensions may require adjustments to satisy the details on Base Sheet EJ-SS.

MODEL: Default
FILE NAME: P:\2019\19038\W06 I-74 Bridge PSEs\4 CADD - DWG\4.4 Struc\0900023-0024\0900023-0024-68F54-004_Joint Repair Detail Plan 0023.dgn

TWM ENGINEERING GEOSPATIAL SERVICES	TWM, INC. WWW.TWM-INC.COM IL DESIGN FIRM LICENSE NO: 184-001220	USER NAME = ckoltveit	DESIGNED - DRA	REVISED -	STATE OF ILLINOIS DEPARTMENT OF TRANSPORTATION	JOINT REPLACEMENT PLAN SN. 090-0023	F.A.I. RTE.	SECTION	COUNTY	TOTAL SHEETS / SHEET NO.
			CHECKED - CDK	REVISED -			74	90-15[HB(1-4);VB;B]BP,BJR,BRR	TAZEWELL	192 / 115
		PLOT SCALE = 0:2.0000 ':' / in.	DRAWN - DRA	REVISED -					CONTRACT NO. 68F54	
		PLOT DATE = 12/1/2020	CHECKED - CDK	REVISED -		SHEET 4 OF 33 SHEETS		ILLINOIS	FED. AID PROJECT	

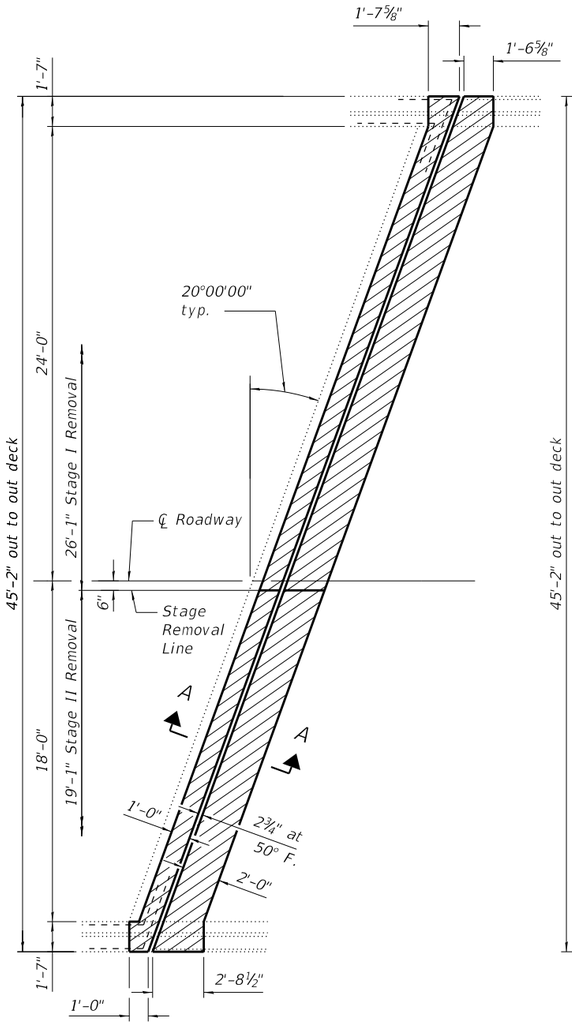

PLAN
CONCRETE REMOVAL AT W. ABUT.

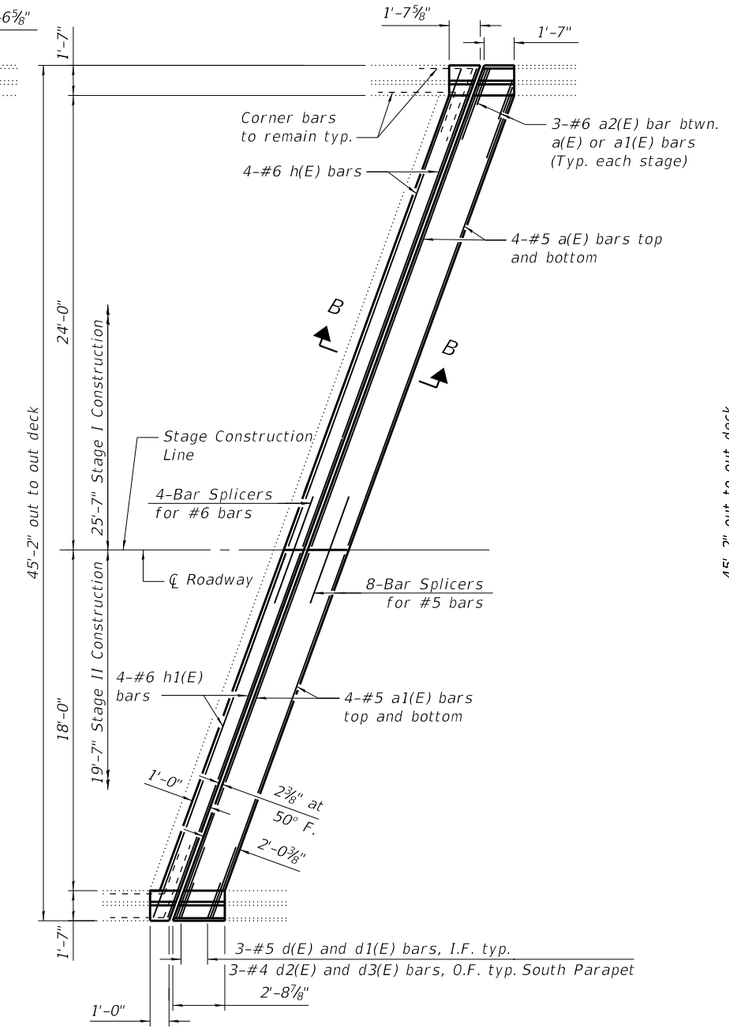

PLAN
CONCRETE REPLACEMENT AT W. ABUT.

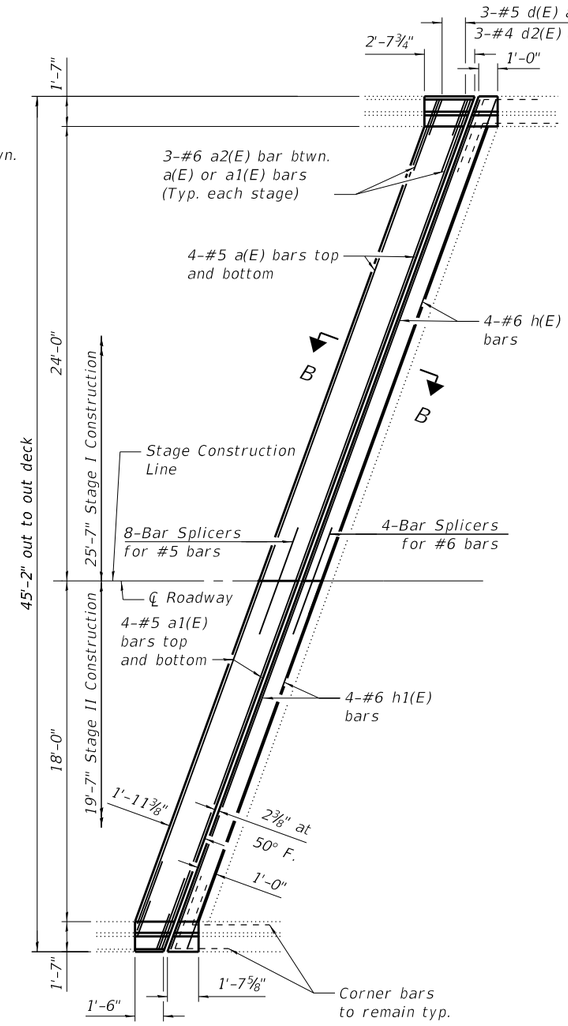

PLAN
CONCRETE REPLACEMENT AT E. ABUT.

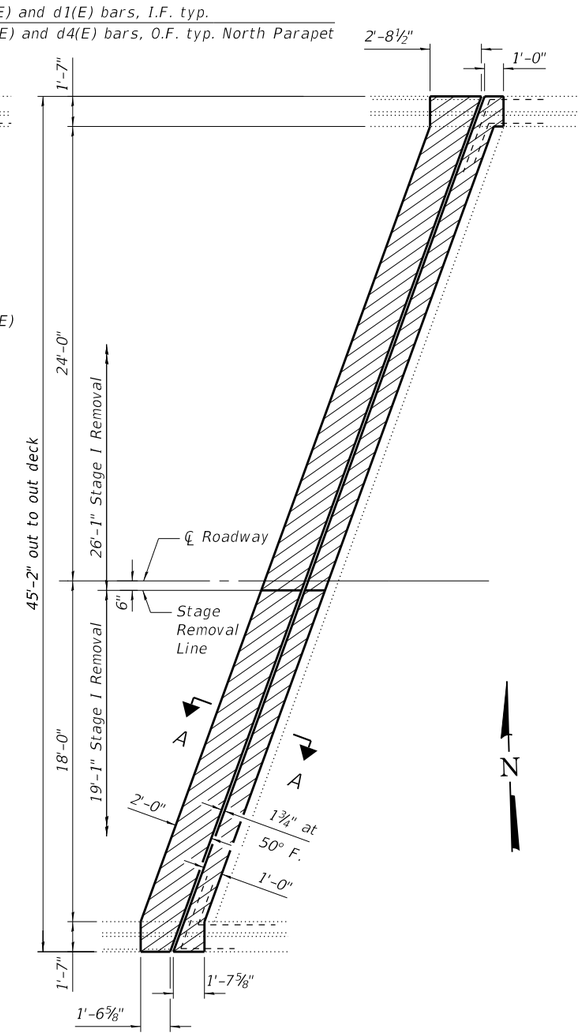

PLAN
CONCRETE REMOVAL AT E. ABUT.

Notes:
Hatched areas indicate Concrete Removal.
For Section views, see Sheet 6 of 33.
Dimensions are based on a Rolled Rail Strip Seal joint. If the contractor elects to use the Welded Rail Strip Seal Joint, deck dimensions may require adjustments to satisy the details on Base Sheet EJ-SS.

MODEL: Default
FILE NAME: P:\2019\190388\W06 I-74 Bridge PSEs\4 CADD - DWG\4.4 Struc\0900023-0024\0900023-0024-68F54-005 Joint Repair Detail Plan 0024.dgn

TWM ENGINEERING & GEOSPATIAL SERVICES	TWM, INC. WWW.TWM-INC.COM	USER NAME = ckoltveit	DESIGNED - DRA	REVISED -	STATE OF ILLINOIS DEPARTMENT OF TRANSPORTATION	JOINT REPLACEMENT PLAN SN. 090-0024	F.A.I. RTE.	SECTION	COUNTY	TOTAL SHEETS	SHEET NO.
			CHECKED - CDK	REVISED -			74	90-15(HB(1-4);VB;B]BP,BJR,BRR	TAZEWELL	192	116
	IL DESIGN FIRM LICENSE NO: 184-001220	PLOT SCALE = 0:2.0000 ':" / in.	DRAWN - DRA	REVISED -			CONTRACT NO. 68F54				
		PLOT DATE = 12/1/2020	CHECKED - CDK	REVISED -		SHEET 5 OF 33 SHEETS	ILLINOIS	FED. AID PROJECT			

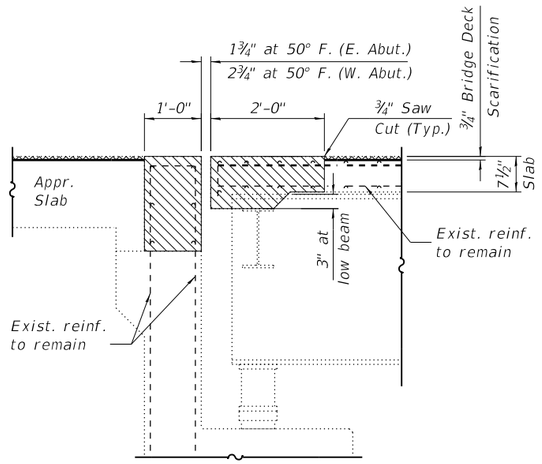

SECTION A-A

(Dims. at Rt. L's to end of deck)

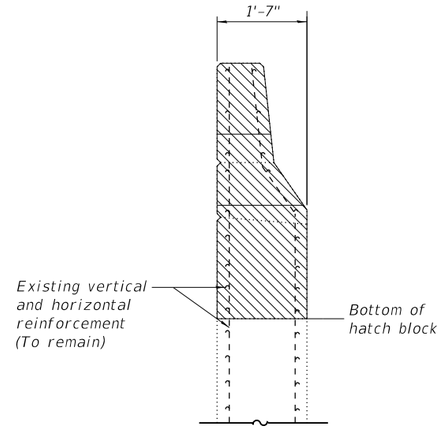

SECTION THRU WINGWALL

(Showing Removal)

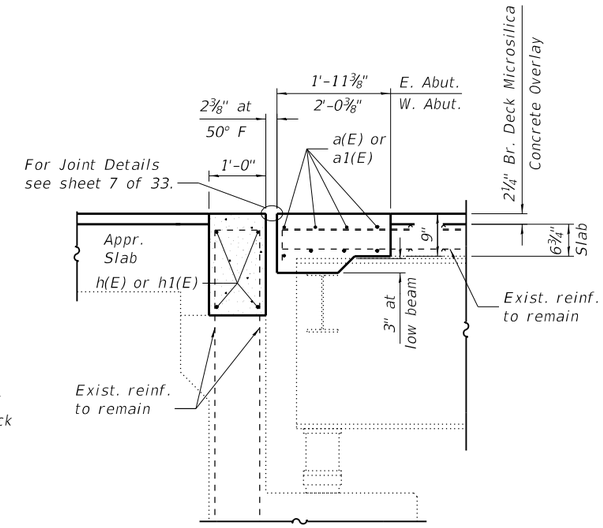

SECTION B-B

(Dims. at Rt. L's to end of deck)

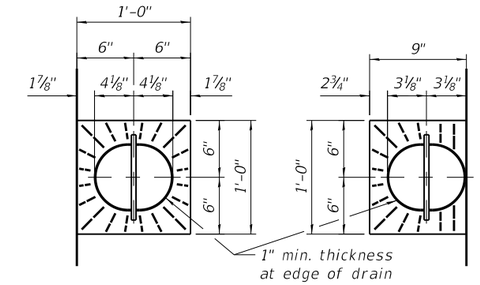

EXIST. DECK DRAIN TOP PLAN

(EB N. Parapet & WB S. Parapet)

EXIST. DECK DRAIN TOP PLAN

(EB S. Parapet & WB N. Parapet)

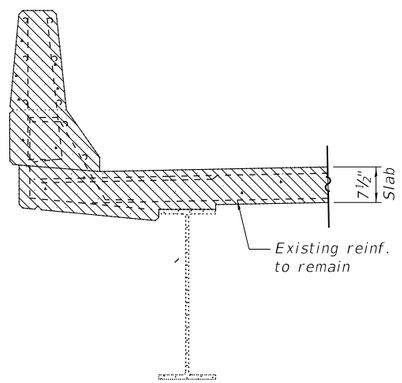

SECTION THRU PARAPET

(Showing Removal)

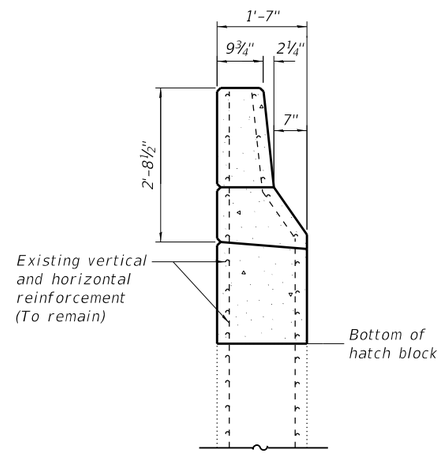

SECTION THRU WINGWALL

(Proposed)

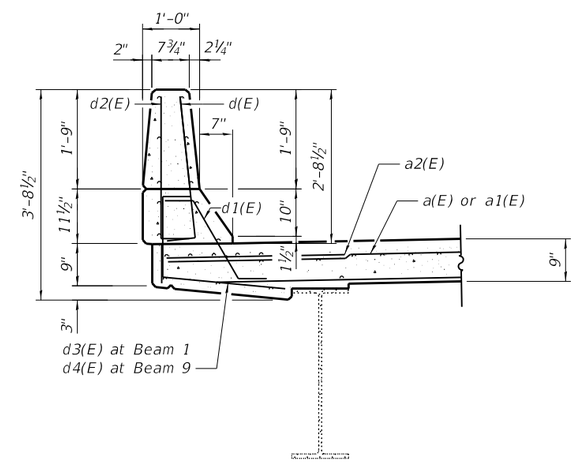

SECTION THRU PARAPET

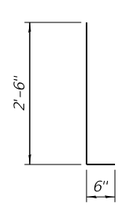

BARS d(E) & d2(E)

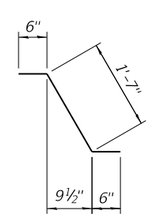

BAR d1(E)

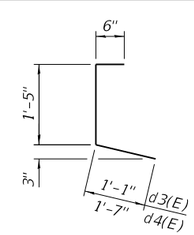

BAR d3(E) & d4(E)

TOTAL BILL OF MATERIAL

Bar	No.	Size	Length	Shape
a(E)	32	#5	25'-10"	
a1(E)	32	#5	19'-8"	
a2(E)	24	#6	4'-0"	
d(E)	24	#5	3'-0"	
d1(E)	24	#5	2'-7"	
d2(E)	24	#4	3'-0"	
d3(E)	12	#4	3'-0"	
d4(E)	12	#4	3'-6"	
h(E)	16	#6	25'-10"	
h1(E)	16	#6	19'-8"	
Concrete Removal			Cu. Yd.	26.2
Concrete Superstructure			Cu. Yd.	28.8
Reinforcement Bars, Epoxy Coated			Pound	3000

Notes:

Hatched areas indicate Concrete Removal. Cross Hatched areas indicate Bridge Deck Scarification.

Dimensions are based on a Rolled Rail Strip Seal Joint. If the Contractor elects to use the Welded Rail Strip Seal Joint, deck dimensions may require adjustments to satisfy the details on Sheet 7 of 33.

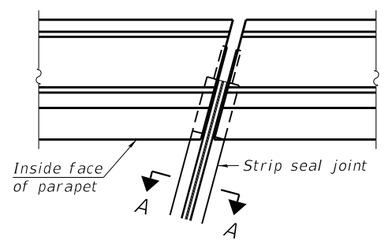

FOR SKEWS ≤ 30°

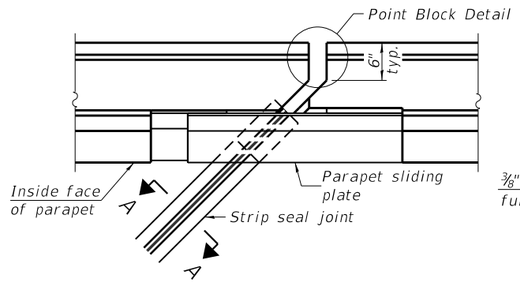

FOR SKEWS > 30°

PLAN AT PARAPET

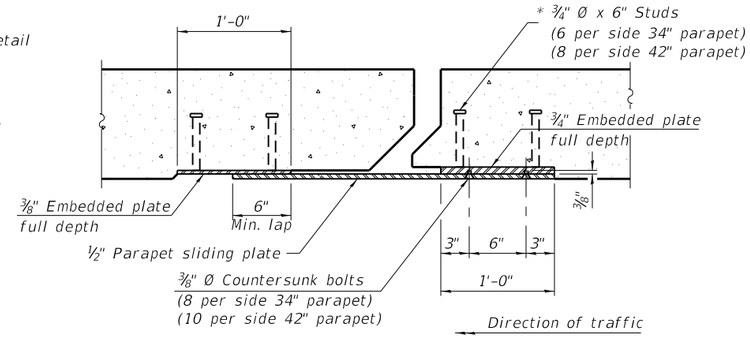

SECTION B-B

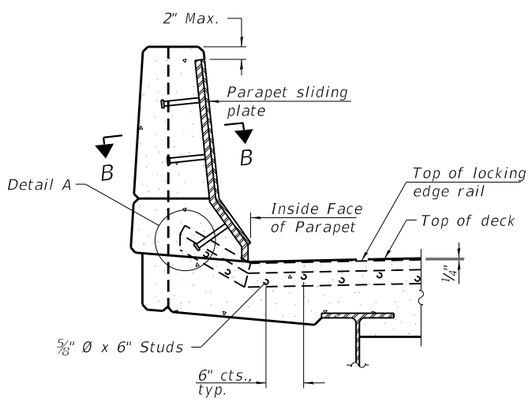

ELEVATION AT PARAPET

(Skews > 30° shown. Skews ≤ 30° similar except as shown in plan view.)

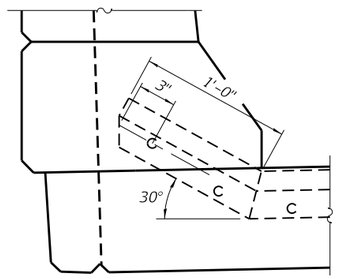

DETAIL A

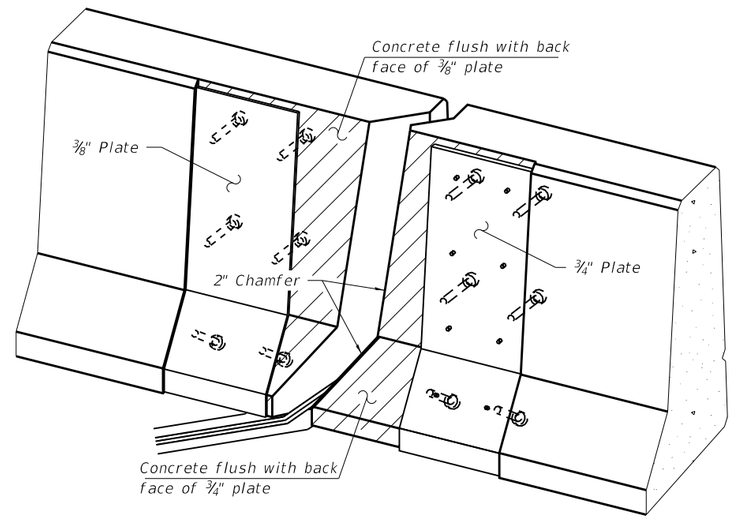

TRIMETRIC VIEW

(Showing embedded plates only)

Notes:

The strip seal shall be made continuous and shall have a minimum thickness of ¼". The configuration of the strip seal shall match the configuration of the locking edge rails. Open or "webbed" strip seal gland configurations are not permitted. The gland shall be sized for a maximum rated movement of 4 inches.

The locking edge rails depicted are configured for typical applications and are conceptual only. The actual configuration of the locking edge rails and matching strip seal may vary from manufacturer to manufacturer provided they fit the application and meet the minimum anchorage shown. Flanged edge rails, however, will not be allowed. Locking edge rails may exceed the 4½" maximum depth provided the anchorage system is revised according to the manufacturer's recommendation.

The manufacturer's recommended installation methods shall be followed.

All steel components shall be galvanized after fabrication according to Article 520.03 of the Standard Specifications.

The Maximum space between locking edge rail segments shall be 3/16" and sealed with a suitable sealant; however, any rail joint within 10' measured perpendicular to the face of the curb or parapet shall be welded as shown in the locking edge rail splice detail.

Cost of parapet sliding plates, embedded plates, and anchorage studs included with Preformed Joint Strip Seal.

34" F-shape barrier shown, 42" F-shape similar as noted.

The concrete opening below the strip seal will vary based on the locking edge rail chosen by the Contractor. Deck and parapet lengths shown elsewhere in the plans are dimensioned to the concrete opening, not the joint opening, and are based on the rolled locking edge rail. If the Contractor elects to use a different locking edge rail, dimensional adjustments may be required. One exception to this would be the strip seal joint at the end of the precast bridge approach slab. For these cases the pavement connector length shall be adjusted, not the length of the bridge approach slab.

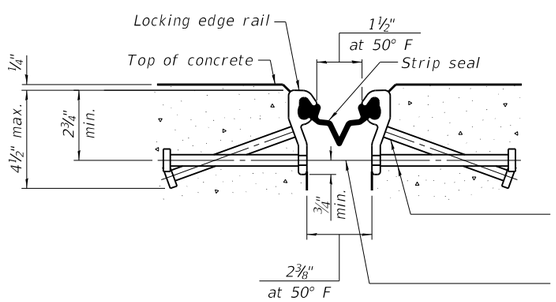

SHOWING ROLLED RAIL JOINT

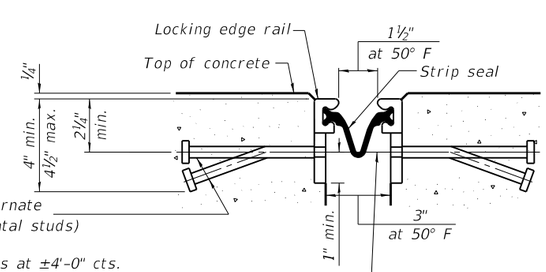

SHOWING WELDED RAIL JOINT

* ⅝" Ø x 6" studs @ 6" cts. (alternate angled/bent studs with horizontal studs)

⅜" ϕ threaded rods in 7/16" ϕ holes at ±4'-0" cts. for holding the proper joint opening based on the temperature during the deck pour. Place to miss studs. All rods shall be burned, or sawed off flush with the plates after concrete is set.

SECTION A-A

* Granular or solid flux filled headed studs conforming to Article 1006.32 of the Std. Specs., automatically end welded.

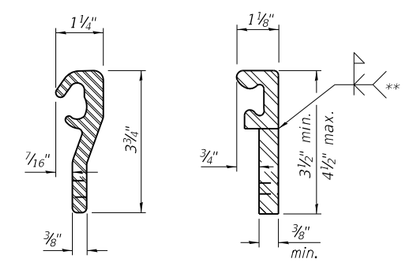

LOCKING EDGE RAILS

** Back gouge not required if complete joint penetration is verified by mock-up.

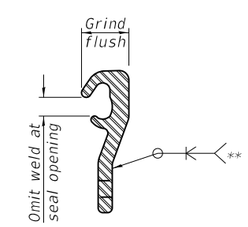

LOCKING EDGE RAIL SPLICE

The inside of the locking edge rail groove shall be free of weld residue. Rolled rail shown, welded rail similar.

TOTAL BILL OF MATERIAL

Item	Unit	Total
Preformed Joint Strip Seal	Foot	187

EJ-SS 8-11-17

MODEL: Default
FILE NAME: P:\2019\190388\W06 I-74 Bridge PSEs\4 CADD - DWG\4.4 Struc\0900023-0024\0900023-0024-68F54-007 Preformed Joint Strip Seal.dgn

TWM ENGINEERING GEOSPATIAL SERVICES
TWM, INC. WWW.TWM-INC.COM
IL DESIGN FIRM LICENSE NO: 184-001220

USER NAME = ckoltveit	DESIGNED - DRA	REVISED -	
	CHECKED - CDK	REVISED -	
PLOT SCALE = 0:2.0000 ':" / in.	DRAWN - DRA	REVISED -	
PLOT DATE = 12/1/2020	CHECKED - CDK	REVISED -	

STATE OF ILLINOIS
DEPARTMENT OF TRANSPORTATION

PREFORMED JOINT STRIP SEAL
STRUCTURE NO. 090-0023 & 090-0024

SHEET 7 OF 33 SHEETS

F.A.I. RTE.	SECTION	COUNTY	TOTAL SHEETS	SHEET NO.
74	90-15[HB(1-4);VB;B]BP,BJR,BRR	TAZEWELL	192	118
		CONTRACT NO. 68F54		
	ILLINOIS	FED. AID PROJECT		

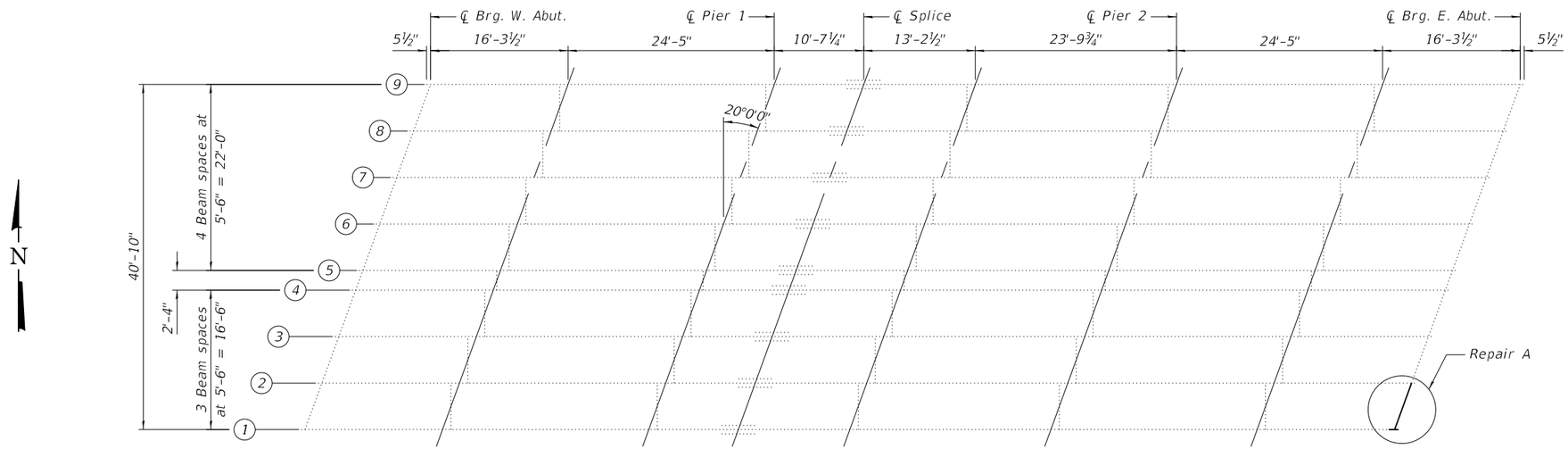

FRAMING PLAN

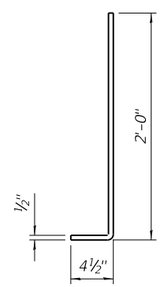

BENT ℄ DETAIL

(2 Required)

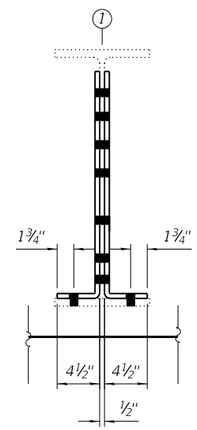

SECTION C-C

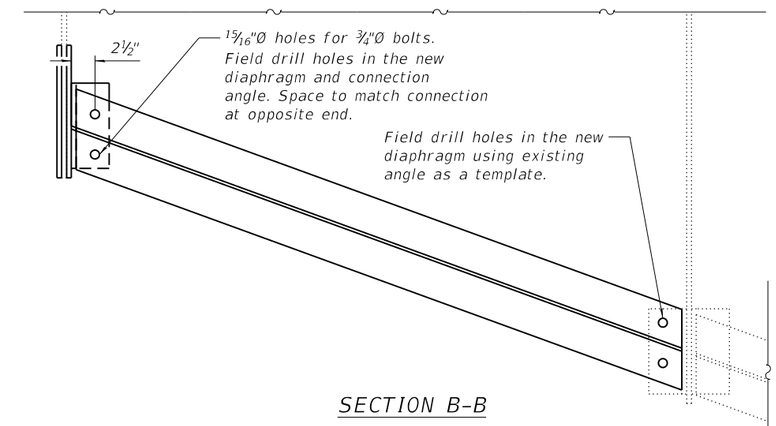

SECTION B-B

BOLT HOLE LEGEND

○ - Field drill using existing holes in steel as template

● - Shop drill holes in new steel

Notes:

Field drill holes in existing beams using holes in new bent plates as a template.

Two hardened washers shall be required at all diaphragm connections.

Cost of diaphragm, angle, and diaphragm connection bolts included with Furnishing and Erecting Structural Steel.

BILL OF MATERIAL

ITEM	UNIT	QUANTITY
Structural Steel Repair	Pound	140
Structural Steel Removal	Pound	240
Furnishing and Erecting Structural Steel	Pound	240

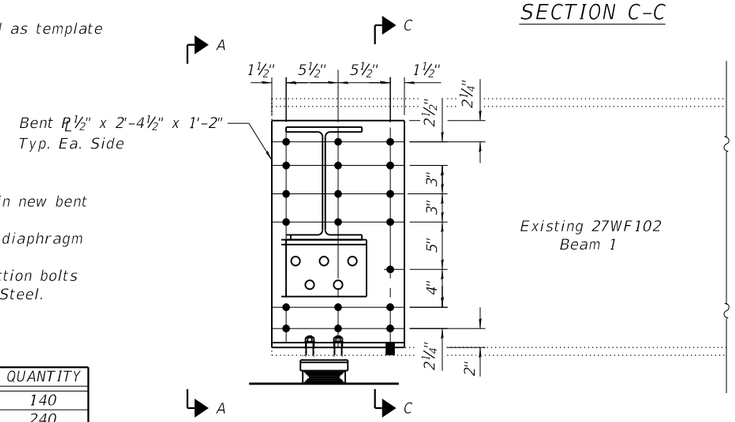

REPAIR A

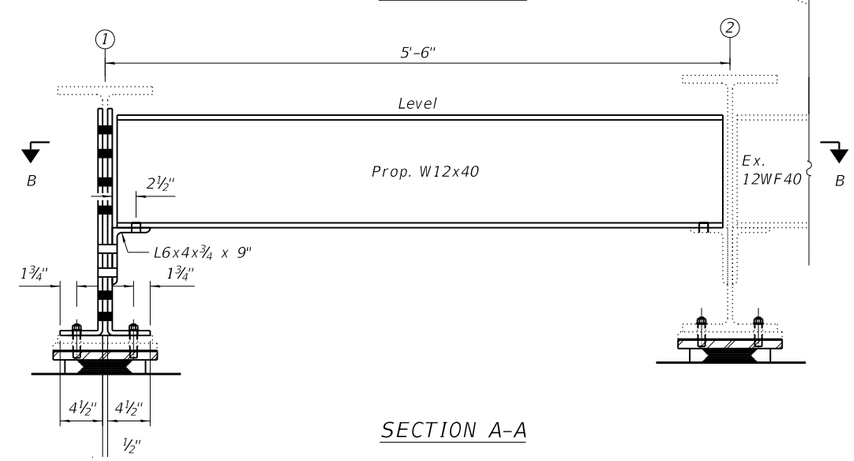

SECTION A-A

MODEL: Default
FILE NAME: P:\2019\190388\WO6 I-74 Bridge PSEs\4 CADD - DWG\4.4 Struc\0900023-0024\0900023-0024-68F54-008_Steel Repair Details 0024.dgn

TWM ENGINEERING & GEOSPATIAL SERVICES	TWM, INC. WWW.TWM-INC.COM IL DESIGN FIRM LICENSE NO: 184-001220	USER NAME = ckoltveit	DESIGNED - CDK	REVISED -	STATE OF ILLINOIS DEPARTMENT OF TRANSPORTATION	STEEL REPAIR DETAILS SN 090-0024	F.A.I. RTE. 74	SECTION 90-15[HB(1-4);VB;B]BP,BJR,BRR	COUNTY TAZEWELL
			CHECKED - BWP	REVISED -					TOTAL SHEETS 192 / SHEET NO. 119
		PLOT SCALE = 0:2.0000 ':' / in.	DRAWN - CDK	REVISED -					CONTRACT NO. 68F54
		PLOT DATE = 12/1/2020	CHECKED - BWP	REVISED -		SHEET 8 OF 33 SHEETS		ILLINOIS	FED. AID PROJECT

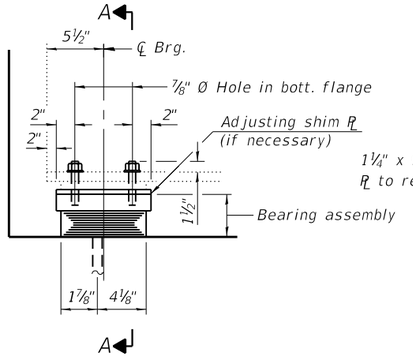

ELEVATION AT E. ABUT.

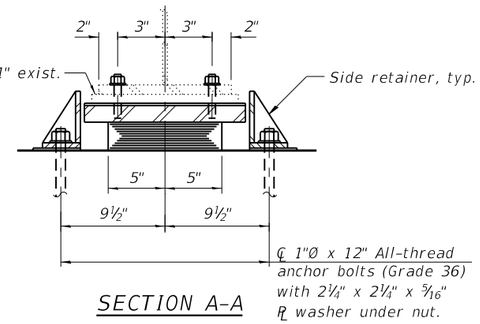

SECTION A-A

TYPE I ELASTOMERIC EXP. BRG.

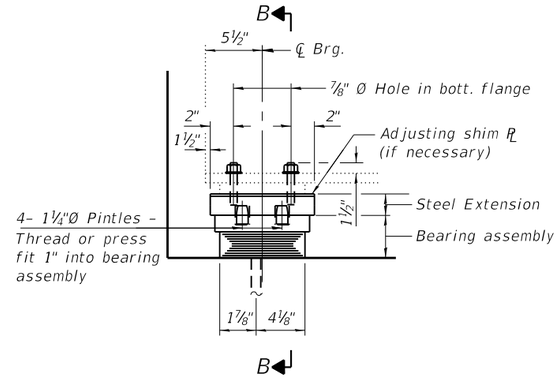

ELEVATION AT W. ABUT.

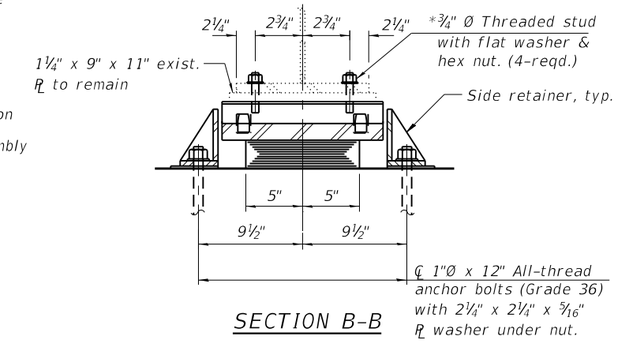

SECTION B-B

TYPE I ELASTOMERIC EXP. BRG.

*¾"Ø Threaded studs shall be placed in the field.

Notes:

Side retainers and stainless steel plates shall be included in the cost of Elastomeric Bearing Assembly, Type I.

Anchor bolts and side retainers at all supports shall be installed as each member is erected unless an equivalent temporary means of lateral restraint is used.

Prior to ordering any material, the Contractor shall verify in the field all bearing height and shim thickness dimensions.

New steel extensions are included with Furnishing and Erecting Structural Steel.

Burn existing anchor bolts flush with existing concrete surface. Grind existing anchor bolts smooth and seal with epoxy. Cost included with Jack and Remove Existing Bearings.

Minimum jack capacity = 25 tons.

All new structural steel for the bearing assembly, side retainers, steel extensions and shim plates shall be hot-dip galvanized. See Special Provisions for "Hot Dip Galvanizing for Structural Steel".

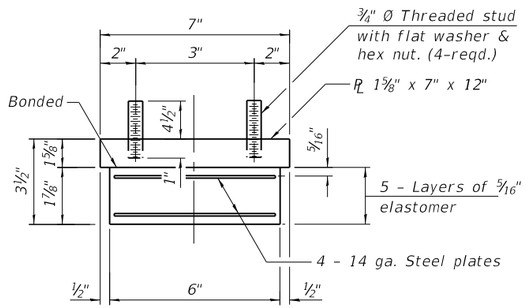

E. ABUT. BEARING ASSEMBLY

(18 Required)

Note:
Shim plates shall not be placed under bearing assembly.

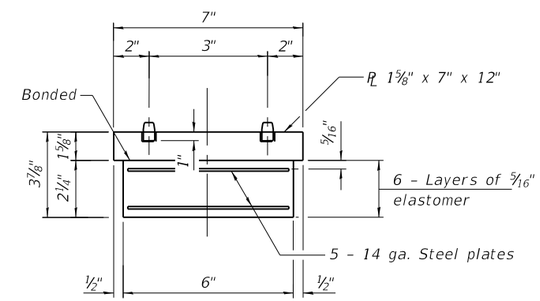

W. ABUT. BEARING ASSEMBLY

(18 Required)

Note:
Shim plates shall not be placed under bearing assembly.

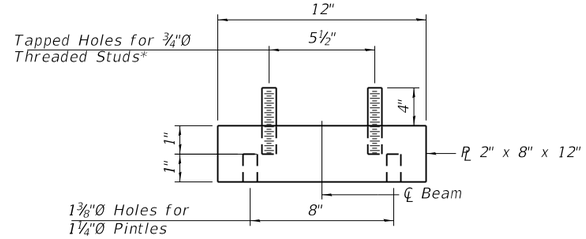

STEEL EXTENSION END VIEW

*Threaded Studs shall be placed in the field.

INTERIOR BEAM REACTION TABLE

R DL	(k)	14.3
R LL	(k)	26.2
R Imp	(k)	7.9
R Total	(k)	48.4

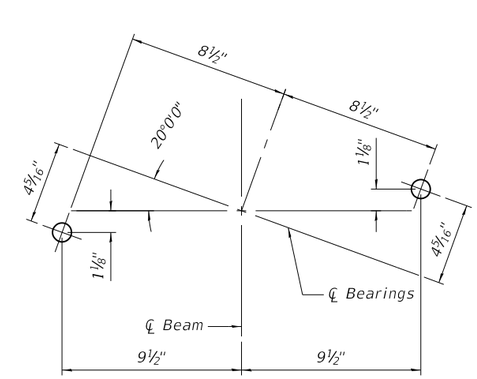

ANCHOR BOLT LOCATION AT E. & W. ABUTMENT

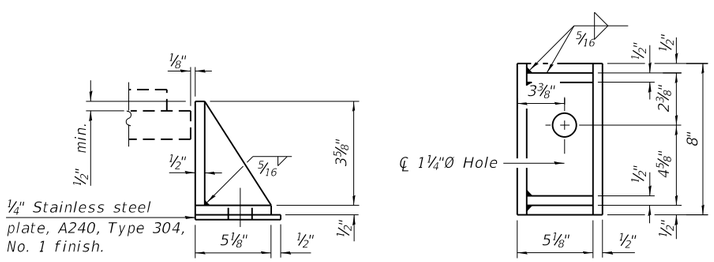

SIDE RETAINER

(72 Required)

Equivalent rolled angle with stiffeners will be allowed in lieu of welded plates.

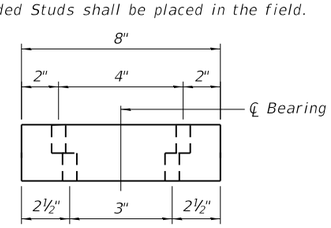

STEEL EXTENSION ELEVATION

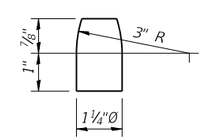

PINTLE

BILL OF MATERIAL

Item	Unit	Total
Elastomeric Bearing Assembly Type I	Each	36
Anchor Bolts, 1"	Each	72
Furnishing and Erecting Structural Steel	Pound	1000
Jack and Remove Existing Bearings	Each	36

MODEL: Default
FILE NAME: P:\2019\19038\WO6 I-74 Bridge PSEs\4 CADD - DWG\4.4 Struc\0900023-0024\0900023-0024-68F54-009 Abut Bearing Replacement Details.dgn

TWM ENGINEERING GEOSPATIAL SERVICES
TWM, INC.
WWW.TWM-INC.COM
IL DESIGN FIRM LICENSE NO: 184-001220

USER NAME = ckoltveit	DESIGNED - CDK	REVISED -	
	CHECKED - BWP	REVISED -	
PLOT SCALE = 0:2.0000 ':' / in.	DRAWN - CDK	REVISED -	
PLOT DATE = 12/3/2020	CHECKED - BWP	REVISED -	

STATE OF ILLINOIS
DEPARTMENT OF TRANSPORTATION

BEARING REPLACEMENT
SN 090-0023 & SN 090-0024

SHEET 9 OF 33 SHEETS

F.A.I. RTE.	SECTION	COUNTY	TOTAL SHEETS	SHEET NO.
74	90-15[HB(1-4);VB;B]BP,BJR,BRR	TAZEWELL	192	120
		CONTRACT NO. 68F54		
		ILLINOIS	FED. AID PROJECT	

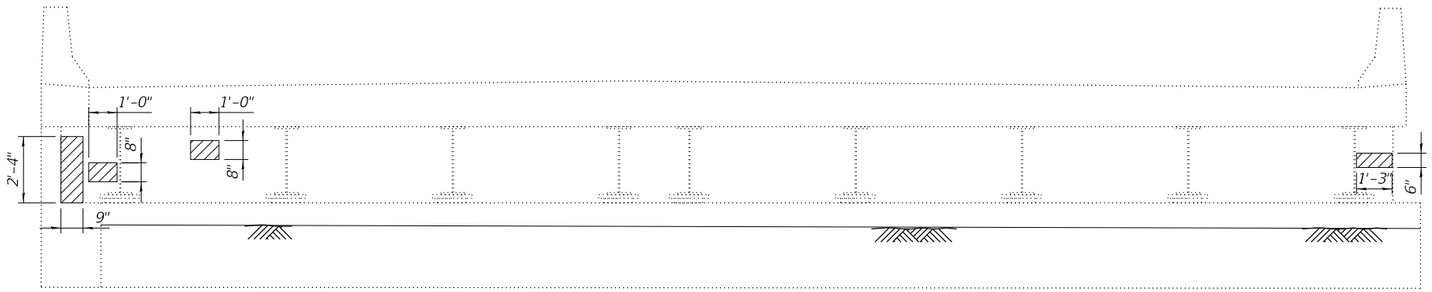

ELEVATION - REPAIR

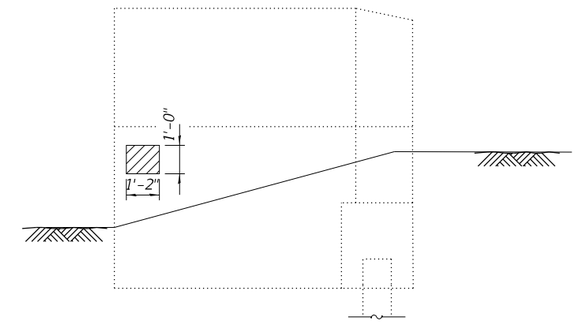

SOUTH WINGWALL ELEVATION

WEST SLOPEWALL

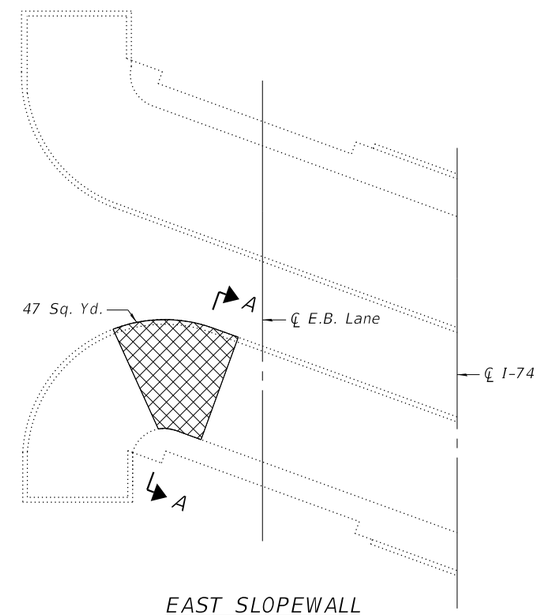

EAST SLOPEWALL

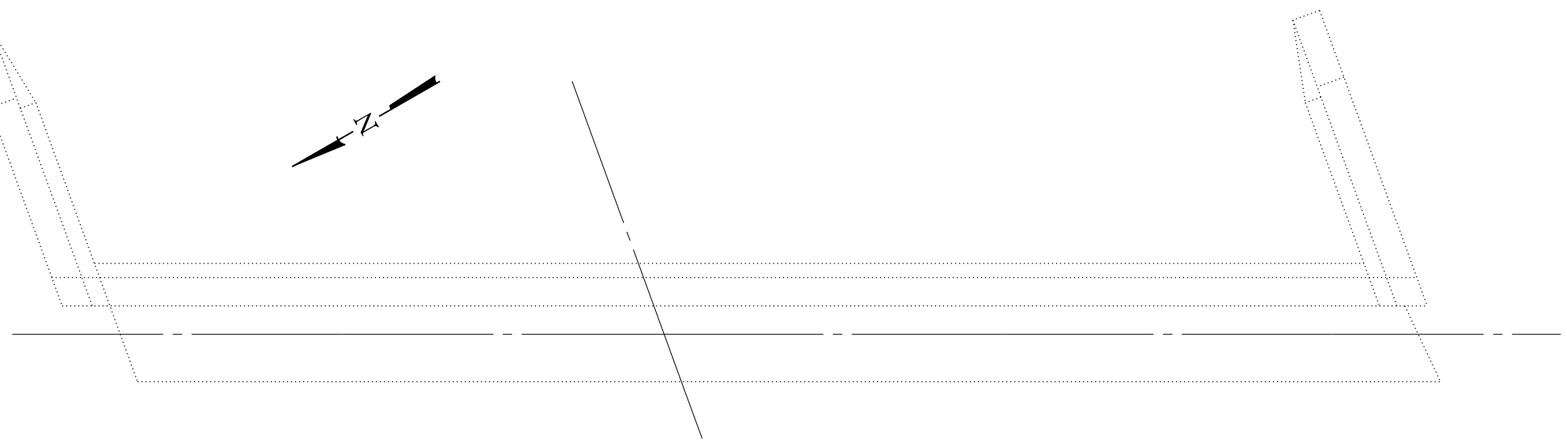

PLAN - REPAIR

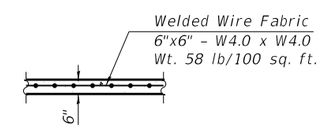

SECTION A-A

- Structural Repair of Concrete (Depth equal to or less than 5 inches)

- Slopewall Removal and Replacement with Slope Wall 6 inch

Note:
Quantities and slope wall removal areas shown are estimated. Actual areas to be determined by the Engineer.

BILL OF MATERIAL

Item	Unit	Quantity
Structural Repair of Concrete (Depth Equal to or Less than 5 Inches)	Sq. Ft.	4.9
Slope Wall Removal	Sq. Yd.	47
Slope Wall 6 inch	Sq. Yd.	47

MODEL: Default
FILE NAME: P:\2019\190388\WO6 I-74 Bridge PSEs\4 CADD - DWG\4.4 Struc\0900023-0024\0900023-0024-68F54-010 East Abutment Repair Detail 0023.dgn

TWM ENGINEERING & GEOSPATIAL SERVICES	TWM, INC. WWW.TWM-INC.COM IL DESIGN FIRM LICENSE NO: 184-001220	USER NAME = ckoltveit	DESIGNED - NP	REVISED -	STATE OF ILLINOIS DEPARTMENT OF TRANSPORTATION
			CHECKED - CDK	REVISED -	
		PLOT SCALE = 0:2.0000 ':" / in.	DRAWN - NP	REVISED -	
		PLOT DATE = 12/1/2020	CHECKED - CDK	REVISED -	

E. ABUTMENT CONCRETE REPAIR DETAILS
STRUCTURE NO. 090-0023

SHEET 10 OF 33 SHEETS

F.A.I. RTE.	SECTION	COUNTY	TOTAL SHEETS	SHEET NO.
74	90-15(HB(1-4);VB;B)BP,BJR,BRR	TAZEWELL	192	121
		CONTRACT NO. 68F54		
	ILLINOIS	FED. AID PROJECT		

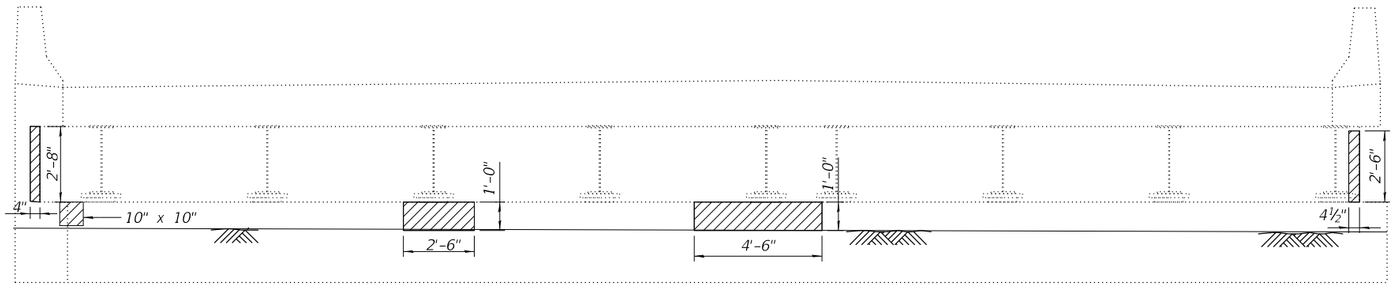

ELEVATION - REPAIR

▨ - Structural Repair of Concrete
(Depth equal to or less than 5 inches)

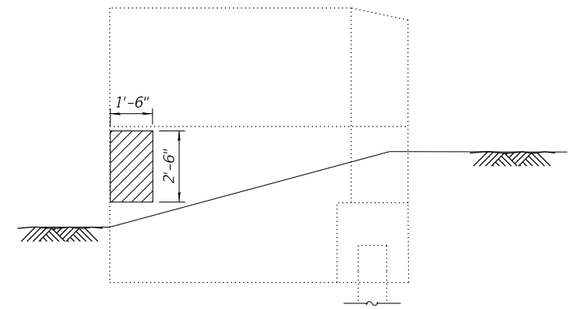

NORTH WINGWALL ELEVATION

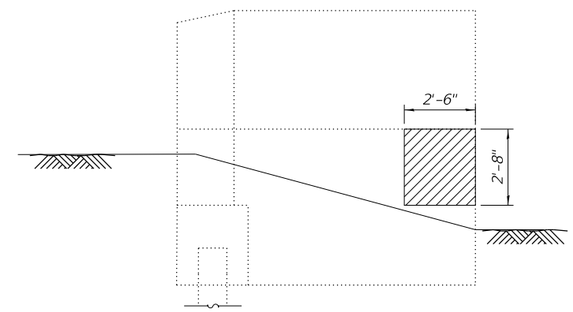

SOUTH WINGWALL ELEVATION

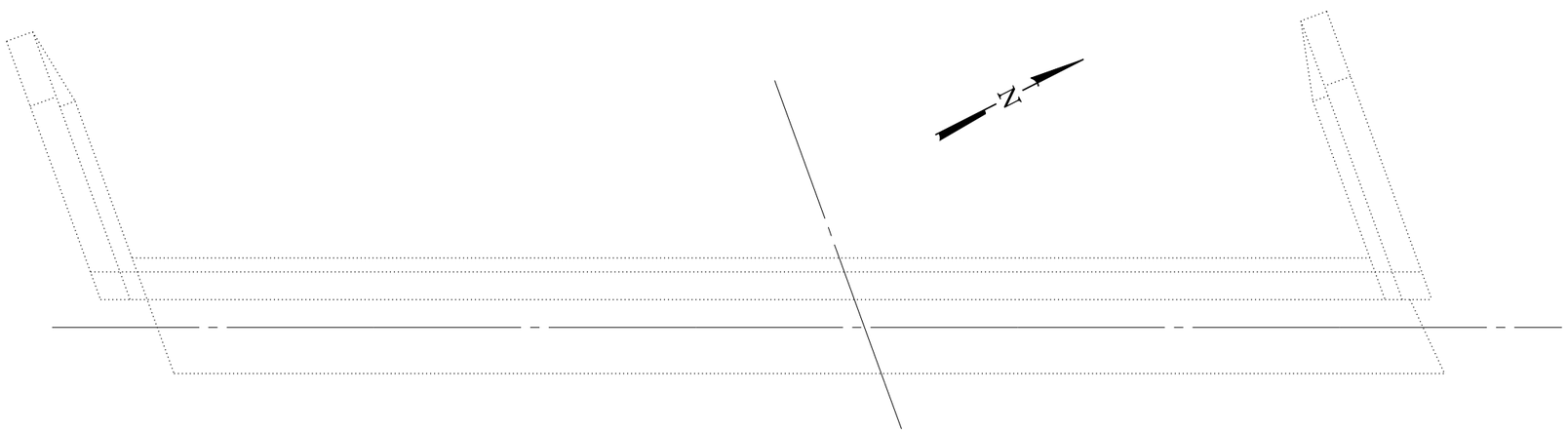

PLAN - REPAIR

BILL OF MATERIAL

Item	Unit	Quantity
Structural Repair of Concrete (Depth Equal to or Less than 5 Inches)	Sq. Ft.	19.9

MODEL: Default
FILE NAME: P:\2019\190388\W06 I-74 Bridge PSEs\4 CADD - DWG\4.4 Struc\0900023-0024\0900023-0024-68F54-011 West Abutment Repair Detail 0023.dgn

TWM ENGINEERING GEOSPATIAL SERVICES	TWM, INC. WWW.TWM-INC.COM IL DESIGN FIRM LICENSE NO: 184-001220	USER NAME = ckoltveit	DESIGNED - NP	REVISED -
			CHECKED - CDK	REVISED -
		PLOT SCALE = 0:2.0000 ':" / in.	DRAWN - NP	REVISED -
		PLOT DATE = 12/1/2020	CHECKED - CDK	REVISED -

STATE OF ILLINOIS
DEPARTMENT OF TRANSPORTATION

W. ABUTMENT CONCRETE REPAIR DETAILS
STRUCTURE NO. 090-0023

SHEET 11 OF 33 SHEETS

F.A.I. RTE.	SECTION	COUNTY	TOTAL SHEETS	SHEET NO.
74	90-15(HB(1-4);VB;B)BP,BJR,BRR	TAZEWELL	192	122
		CONTRACT NO. 68F54		
	ILLINOIS	FED. AID PROJECT		

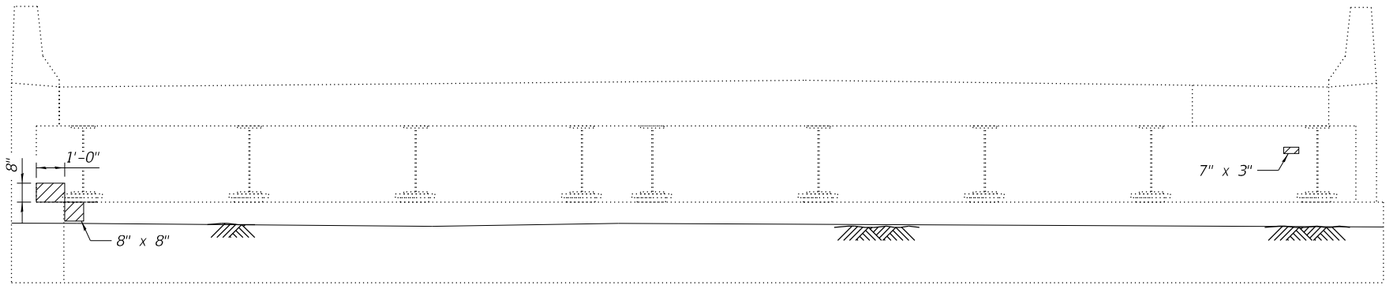

ELEVATION - REPAIR

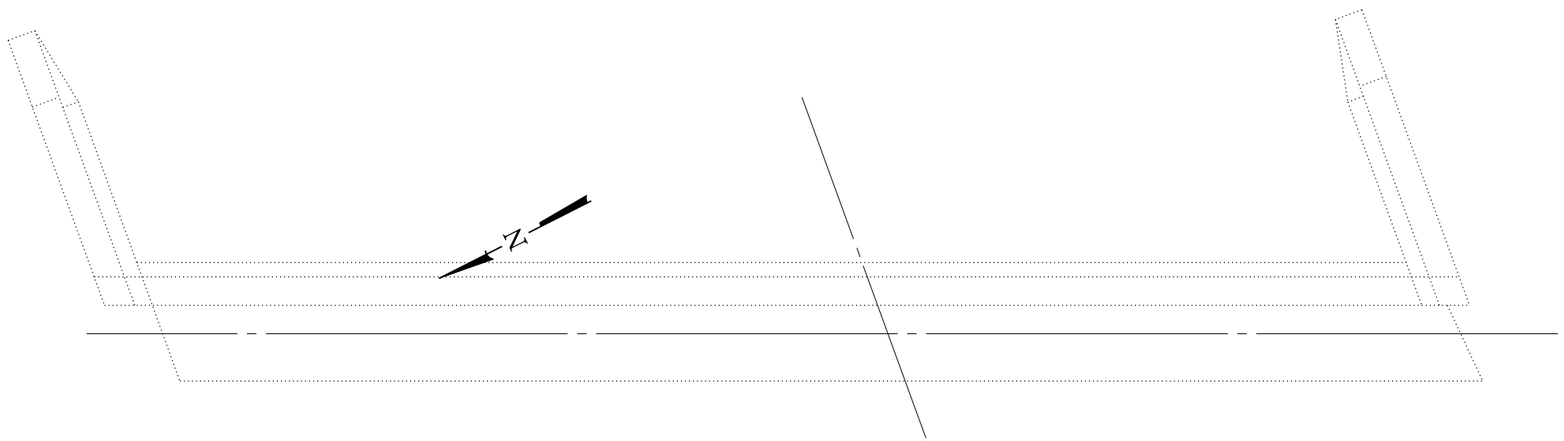

PLAN - REPAIR

WEST SLOPEWALL

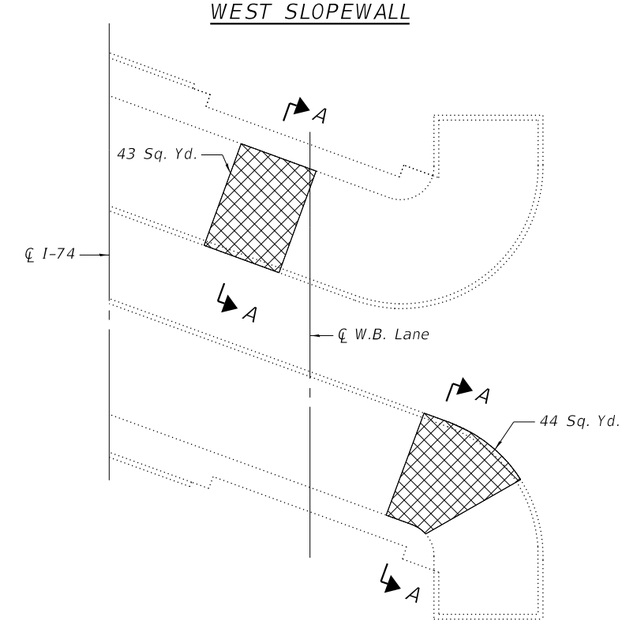

EAST SLOPEWALL

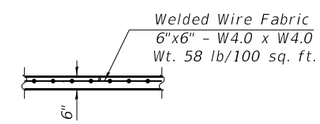

SECTION A-A

- Structural Repair of Concrete (Depth equal to or less than 5 inches)
- Slopewall Removal and Replacement with Slope Wall 6 inch

Note:
Quantities and slope wall removal areas shown are estimated. Actual areas to be determined by the Engineer.

BILL OF MATERIAL

Item	Unit	Quantity
Structural Repair of Concrete (Depth Equal to or Less than 5 Inches)	Sq. Ft.	1.3
Slope Wall Removal	Sq. Yd.	87
Slope Wall 6 inch	Sq. Yd.	87

MODEL: Default
FILE NAME: P:\2019\19038\W06 I-74 Bridge PSES\4 CADD - DWG\4.4 Struc\0090023-0024\0900023-0024-68F54-012-East Abutment Repair Details 0024.dgn

TWM ENGINEERING & GEOSPATIAL SERVICES
TWM, INC.
WWW.TWM-INC.COM
IL DESIGN FIRM LICENSE NO: 184-001220

USER NAME = ckoltveit	DESIGNED - NP	REVISED -	
	CHECKED - CDK	REVISED -	
PLOT SCALE = 0:2.0000 ':" / in.	DRAWN - NP	REVISED -	
PLOT DATE = 12/1/2020	CHECKED - CDK	REVISED -	

STATE OF ILLINOIS
DEPARTMENT OF TRANSPORTATION

E. ABUTMENT CONCRETE REPAIR DETAILS
STRUCTURE NO. 090-0024

SHEET 12 OF 33 SHEETS

F.A.I. RTE.	SECTION	COUNTY	TOTAL SHEETS	SHEET NO.
74	90-15(HB(1-4);VB;B)BP,BJR,BRR	TAZEWELL	192	123
		CONTRACT NO. 68F54		
	ILLINOIS	FED. AID PROJECT		

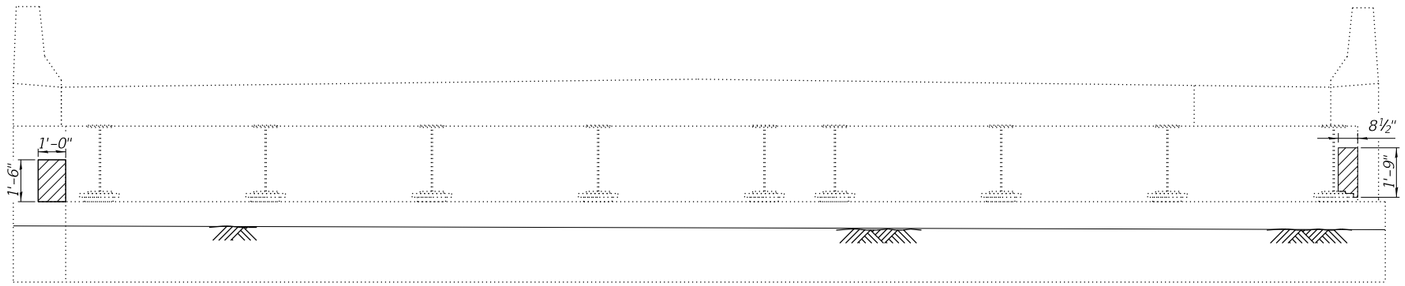

ELEVATION - REPAIR

▨ - Structural Repair of Concrete
(Depth equal to or less than 5 inches)

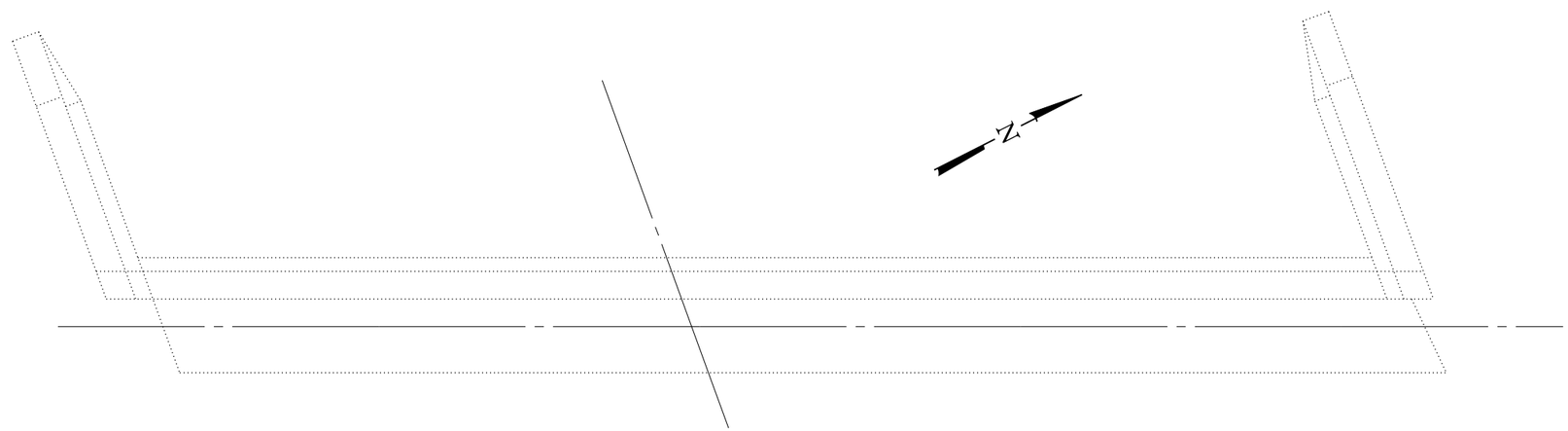

PLAN - REPAIR

BILL OF MATERIAL

Item	Unit	Quantity
Structural Repair of Concrete (Depth Equal to or Less than 5 Inches)	Sq. Ft.	2.7

MODEL: Default
FILE NAME: P:\2019\1903BRWOR I-74 Bridge PSE\34 CADD - DWG\4.4 Struc\0900023-0024\0900023-0024-68F54-013-West Abutment Repair Details 0024.dgn

TWM ENGINEERING GEOSPATIAL SERVICES	TWM, INC. WWW.TWM-INC.COM IL DESIGN FIRM LICENSE NO: 184-001220	USER NAME = ckoltveit	DESIGNED - NP	REVISED -	STATE OF ILLINOIS DEPARTMENT OF TRANSPORTATION
			CHECKED - CDK	REVISED -	
		PLOT SCALE = 0:2.0000 ':" / in.	DRAWN - NP	REVISED -	
		PLOT DATE = 12/1/2020	CHECKED - CDK	REVISED -	

W. ABUTMENT CONCRETE REPAIR DETAILS
STRUCTURE NO. 090-0024

SHEET 13 OF 33 SHEETS

F.A.I. RTE.	SECTION	COUNTY	TOTAL SHEETS	SHEET NO.
74	90-15[HB(1-4);VB;B]BP,BJR,BRR	TAZEWELL	192	124
		CONTRACT NO. 68F54		
	ILLINOIS	FED. AID PROJECT		

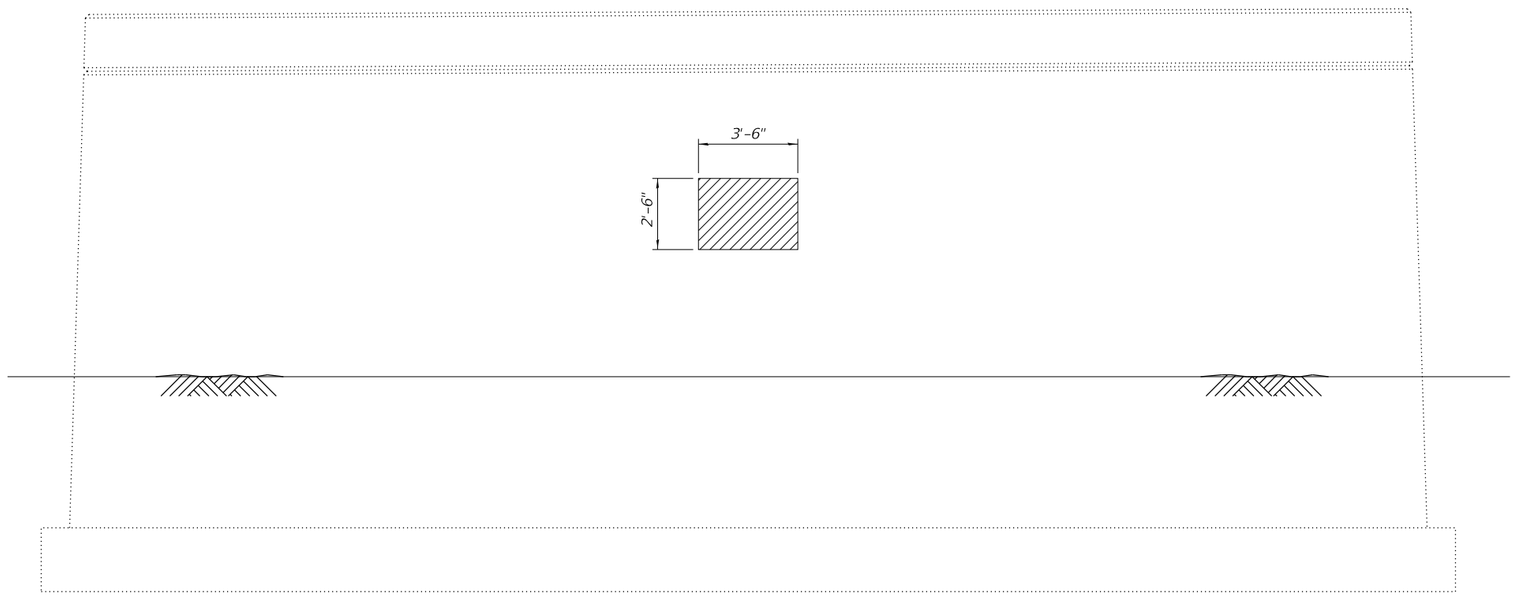

PIER 1 ELEVATION - REPAIR

(Looking East)

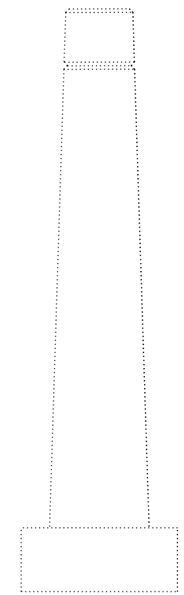

PIER 1 END ELEVATION

- Structural Repair of Concrete
(Depth equal to or less than 5 inches)

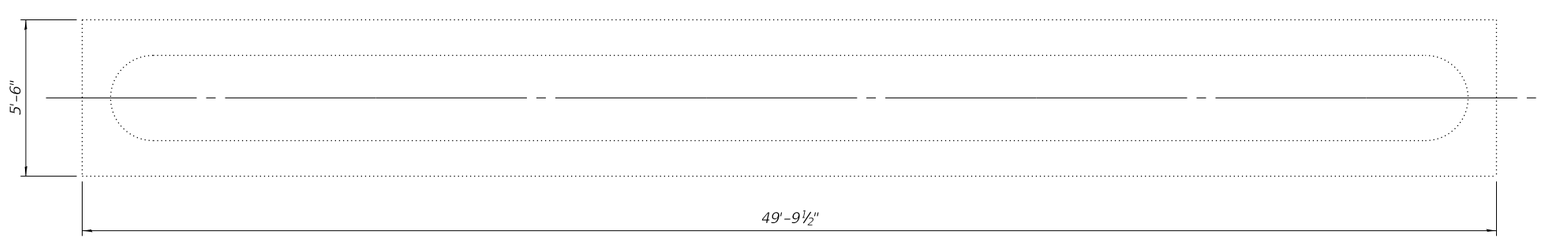

PIER 1 FOOTING PLAN

BILL OF MATERIAL

Item	Unit	Quantity
Structural Repair of Concrete (Depth Equal to or Less than 5 Inches)	Sq. Ft.	8.8

MODEL: Default
FILE NAME: P:\2019\19038BW06 I-74 Bridge PSEs\4 CADD - DWG\4.4 Struc\0900023-0024\0900023-0024-68F54-014 Pier 1 Repair Detail 0023.dgn

TWM ENGINEERING & GEOSPATIAL SERVICES
TWM, INC.
WWW.TWM-INC.COM
IL DESIGN FIRM LICENSE NO: 184-001220

USER NAME = ckoltveit	DESIGNED - NP	REVISED -
	CHECKED - CDK	REVISED -
PLOT SCALE = 0:2.0000 ':' / in.	DRAWN - NP	REVISED -
PLOT DATE = 12/1/2020	CHECKED - CDK	REVISED -

STATE OF ILLINOIS
DEPARTMENT OF TRANSPORTATION

PIER 1 REPAIR DETAILS
STRUCTURE NO. 090-0023

SHEET 14 OF 33 SHEETS

F.A.I. RTE.	SECTION	COUNTY	TOTAL SHEETS	SHEET NO.
74	90-15[HB(1-4);VB;B]BP,BJR,BRR	TAZEWELL	192	125

CONTRACT NO. 68F54

ILLINOIS FED. AID PROJECT

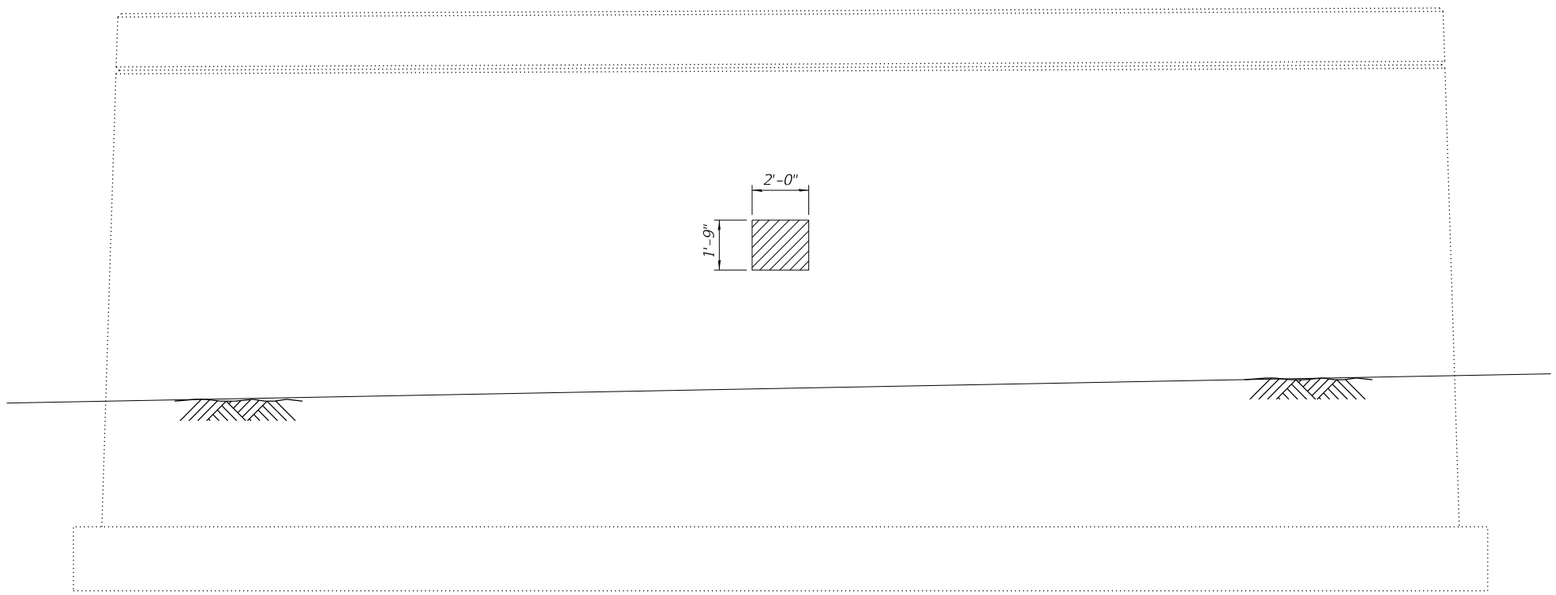

PIER 2 ELEVATION

(Looking East)

- Structural Repair of Concrete
(Depth equal to or less than 5 inches)

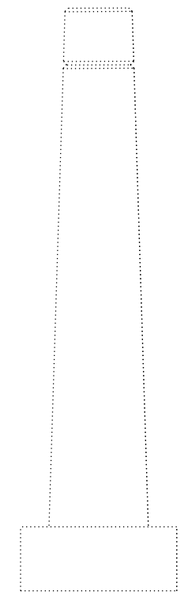

PIER 2 END ELEVATION

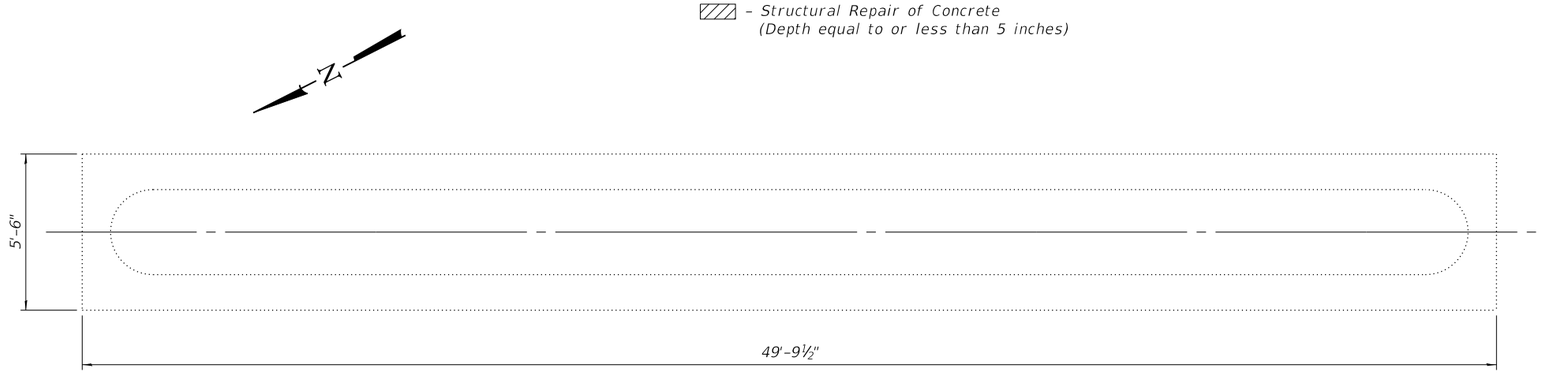

PIER 2 FOOTING PLAN

BILL OF MATERIAL

Item	Unit	Quantity
Structural Repair of Concrete (Depth Equal to or Less than 5 Inches)	Sq. Ft.	3.5

MODEL: Default
FILE NAME: P:\2019\19038BWO6 I-74 Bridge PSEs\4 CADD - DWG\4.4 Struc\0900023-0024\0900023-0024-68F54-015 Pier 2 Repair Detail 0023.dgn

TWM ENGINEERING GEOSPATIAL SERVICES
TWM, INC.
WWW.TWM-INC.COM
IL DESIGN FIRM LICENSE NO: 184-001220

USER NAME = ckoltveit	DESIGNED - NP	REVISED -
	CHECKED - CDK	REVISED -
PLOT SCALE = 0:2.0000 ':' / in.	DRAWN - NP	REVISED -
PLOT DATE = 12/1/2020	CHECKED - CDK	REVISED -

STATE OF ILLINOIS
DEPARTMENT OF TRANSPORTATION

PIER 2 REPAIR DETAILS
STRUCTURE NO. 090-0023

SHEET 15 OF 33 SHEETS

F.A.I. RTE.	SECTION	COUNTY	TOTAL SHEETS	SHEET NO.
74	90-15[HB(1-4);VB;B]BP,BJR,BRR	TAZEWELL	192	126
		CONTRACT NO. 68F54		
	ILLINOIS	FED. AID PROJECT		

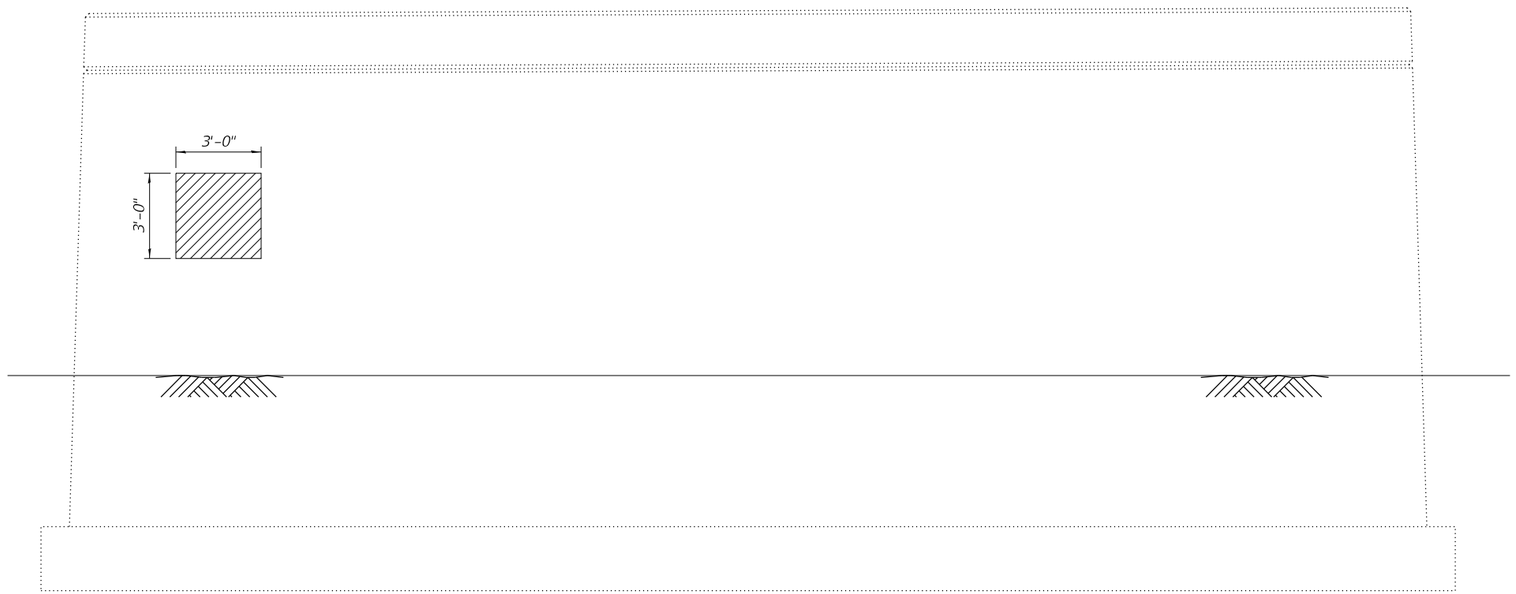

PIER 1 ELEVATION
(Looking East)

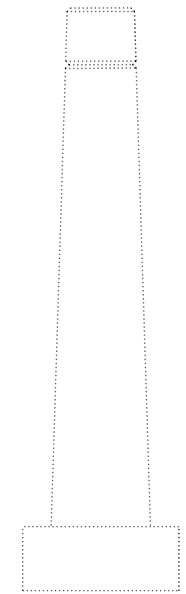

PIER 1 END ELEVATION

- Structural Repair of Concrete
(Depth Equal to less than 5 inches)

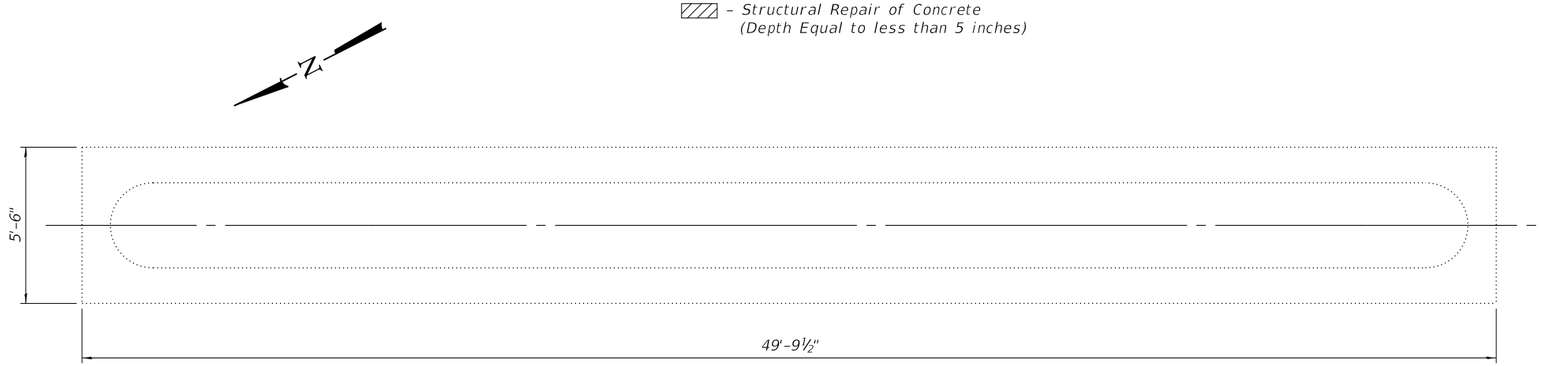

PIER 1 FOOTING PLAN

BILL OF MATERIAL

Item	Unit	Quantity
Structural Repair of Concrete (Depth Equal to or Less than 5 Inches)	Sq. Ft.	9.0

MODEL: Default
FILE NAME: P:\2019\190388\WO6 I-74 Bridge PSEs\4 CADD - DWG\4.4 Struc\0900023-0024\0900023-0024-68F54-016-Per 1 Result Details 0024.dgn

TWM ENGINEERING & GEOSPATIAL SERVICES
TWM, INC.
WWW.TWM-INC.COM
IL DESIGN FIRM LICENSE NO: 184-001220

USER NAME = ckoltveit	DESIGNED - NP	REVISED -	
	CHECKED - CDK	REVISED -	
PLOT SCALE = 0:2.0000 ':' / in.	DRAWN - NP	REVISED -	
PLOT DATE = 12/1/2020	CHECKED - CDK	REVISED -	

STATE OF ILLINOIS
DEPARTMENT OF TRANSPORTATION

PIER 1 REPAIR DETAILS
STRUCTURE NO. 090-0024

SHEET 16 OF 33 SHEETS

F.A.I. RTE.	SECTION	COUNTY	TOTAL SHEETS	SHEET NO.
74	90-15[HB(1-4);VB;B]BP,BJR,BRR	TAZEWELL	192	127
		CONTRACT NO. 68F54		
	ILLINOIS	FED. AID PROJECT		

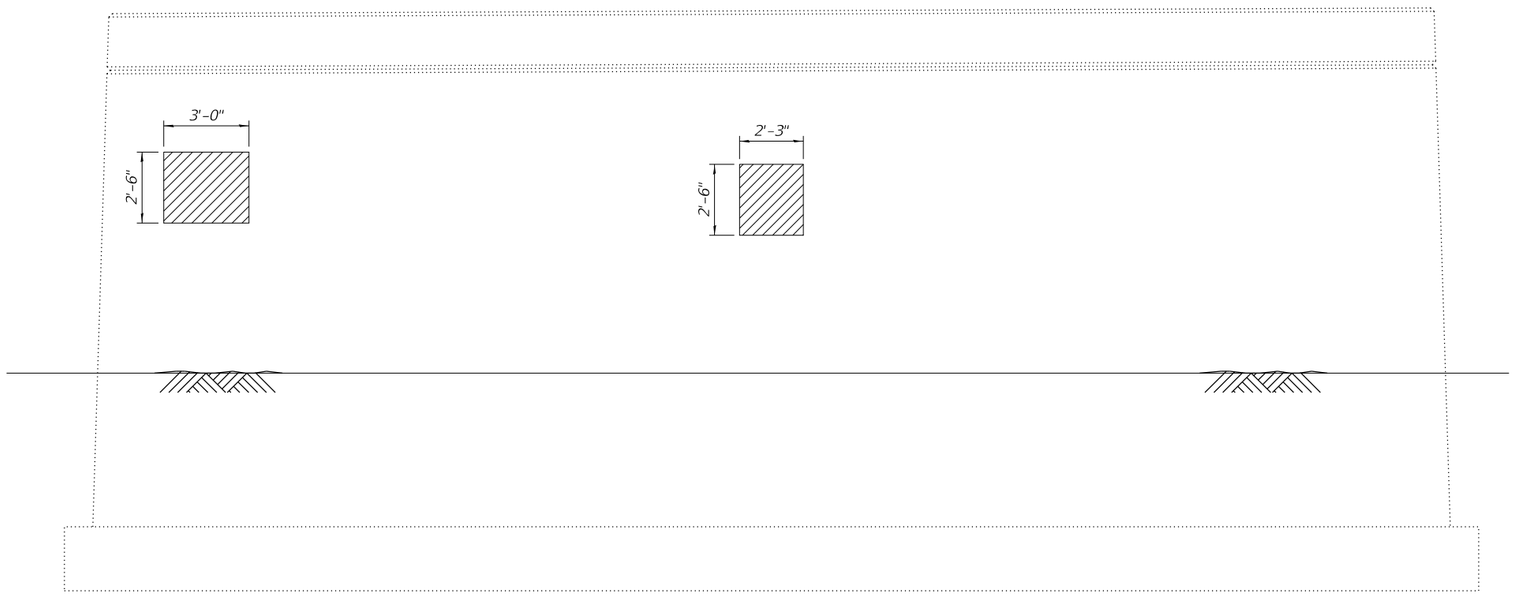

PIER 2 ELEVATION

(Looking West)

▨ - Structural Repair of Concrete
(Depth Equal to less than 5 inches)

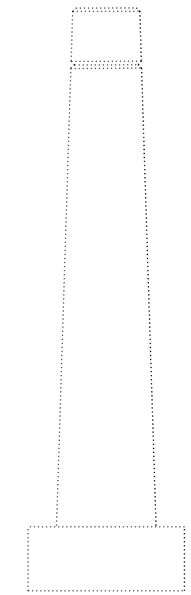

PIER 2 END ELEVATION

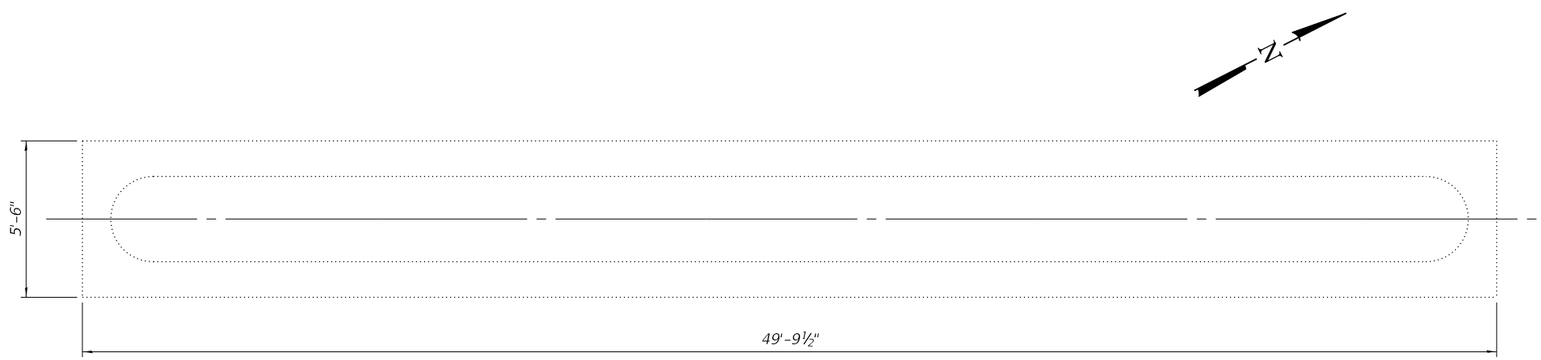

PIER 2 FOOTING PLAN

BILL OF MATERIAL

Item	Unit	Quantity
Structural Repair of Concrete (Depth Equal to or Less than 5 Inches)	Sq. Ft.	13.1

MODEL: Default
FILE NAME: P:\2019\19038BW06 I-74 Bridge PSEs\4 CADD - DWG\4.4 Struc\0900023-0024\0900023-0024-68F54-017-Pier 2 Result Details 0024.dgn

TWM ENGINEERING & GEOSPATIAL SERVICES
TWM, INC.
WWW.TWM-INC.COM
IL DESIGN FIRM LICENSE NO: 184-001220

USER NAME = ckoltveit	DESIGNED - NP	REVISED -	
	CHECKED - CDK	REVISED -	
PLOT SCALE = 0:2.0000 ':' / in.	DRAWN - NP	REVISED -	
PLOT DATE = 12/1/2020	CHECKED - CDK	REVISED -	

STATE OF ILLINOIS
DEPARTMENT OF TRANSPORTATION

PIER 2 REPAIR DETAILS
STRUCTURE NO. 090-0024

SHEET 17 OF 33 SHEETS

F.A.I. RTE.	SECTION	COUNTY	TOTAL SHEETS	SHEET NO.
74	90-15[HB(1-4);VB;B]BP,BJR,BRR	TAZEWELL	192	128
		CONTRACT NO. 68F54		
	ILLINOIS	FED. AID PROJECT		

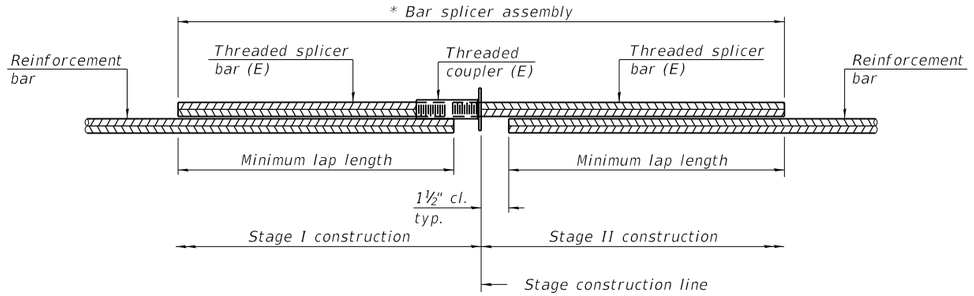

STANDARD BAR SPLICER ASSEMBLY PLAN

(All components shall be provided from one supplier)

Threaded splicer bar length = min. lap length + 1½" + thread length

* Epoxy not required on Bar Splicer Assembly components used in conjunction with black bars.

Location	Bar size	No. assemblies required	Minimum lap length
Deck	#5	32	3'-6"
Abut. Hatch Block	#6	16	4'-0"

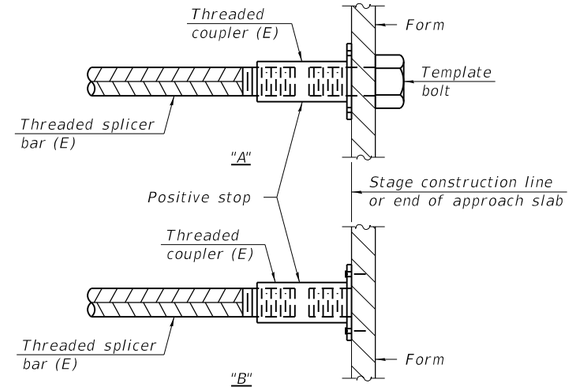

INSTALLATION AND SETTING METHODS

"A" : Set bar splicer assembly by means of a template bolt.
"B" : Set bar splicer assembly by nailing to wood forms or cementing to steel forms.
(E) : Indicates epoxy coating.

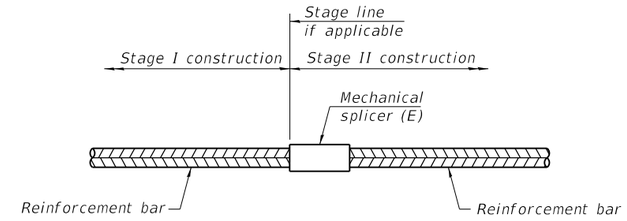

STANDARD MECHANICAL SPLICER

Location	Bar size	No. assemblies required

Notes:
Splicer bars shall be deformed with threaded ends and have a minimum 60 ksi yield strength.
All reinforcement shall be lapped and tied to the splicer bars.
Bar splicer assemblies shall be epoxy coated according to the requirements for reinforcement bars. See Section 508 of the Standard Specifications.
See approved list of bar splicer assemblies and mechanical splicers for alternatives.

BSD-1 1-1-2020

MODEL: Default
FILE NAME: P:\2019\19038BW06 I-74 Bridge PSEs\4 CADD - DWGs\4.4 Struc\0900023-0024\0900023-0024-68F54-018 Bar Splicer Assembly Details.dgn

TWM ENGINEERING & GEOSPATIAL SERVICES
TWM, INC.
WWW.TWM-INC.COM
IL DESIGN FIRM LICENSE NO: 184-001220

USER NAME = ckoltveit	DESIGNED - DRA	REVISED -	
	CHECKED - CDK	REVISED -	
PLOT SCALE = 0:2.0000 ':' / in.	DRAWN - DRA	REVISED -	
PLOT DATE = 12/1/2020	CHECKED - CDK	REVISED -	

STATE OF ILLINOIS
DEPARTMENT OF TRANSPORTATION

BAR SPLICER ASSEMBLY AND MECHANICAL SPLICER DETAILS
STRUCTURE NO. 090-0023 & 090-0024

SHEET 18 OF 33 SHEETS

F.A.I. RTE.	SECTION	COUNTY	TOTAL SHEETS	SHEET NO.
74	90-15[HB(1-4);VB;B]BP,BJR,BRR	TAZEWELL	192	129
		CONTRACT NO. 68F54		
	ILLINOIS	FED. AID PROJECT		

Bench Mark: Chiseled "L" center of N.W. bridge parapet of structure No. 090-0024(W.B.) Elev. 722.95

Existing Structure: 090-0023(E.B.) & 090-0024(W.B.). Built as F.A.I. Route 5, Section 90-15B in 1960. The existing superstructure consists of a R.C. deck supported on 3 span continuous WF beams with 133'-3½" bk. to bk. abutments and 43'-8" out to out. One lane of traffic shall be maintained over each existing structure during the rehabilitation.

No salvage

STATE OF ILLINOIS
DEPARTMENT OF TRANSPORTATION

ROUTE NO.	SECTION	COUNTY	TOTAL SHEETS	SHEET NO.
F.A.I. 74	(90-15B) I-1	TAZEWELL	107	SHEET NO. 1 / 23 SHEETS
FED. ROAD DIST. NO. 7		ILLINOIS	FED. AID PROJECT-	

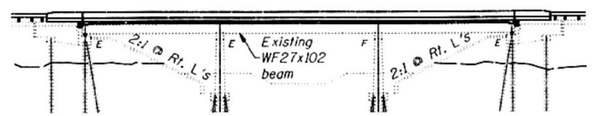

ELEVATION

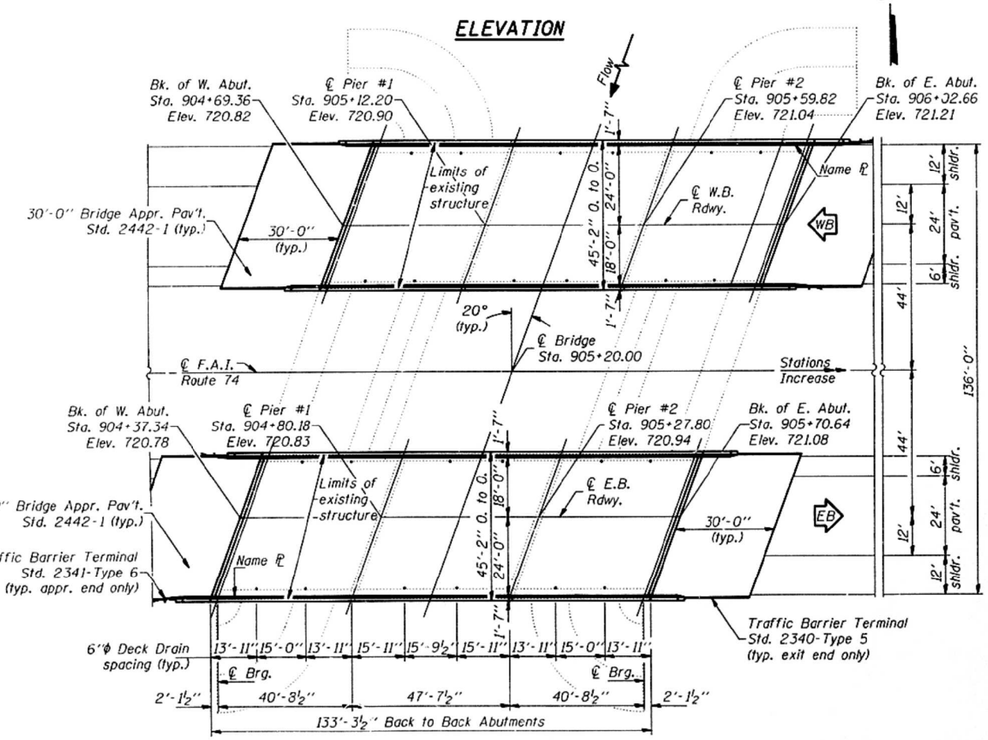

PLAN

FOR INFORMATION ONLY

DESIGNED	Jeffrey P. Vette
CHECKED	Chris A. Sievers
DRAWN	
CHECKED	JPV CAS

March 30 1994

EXAMINED Greg S. Kasper — ENGINEER OF BRIDGE DESIGN

PASSED Ralph E. Anderson — ENGINEER OF BRIDGES AND STRUCTURES

STATE OF ILLINOIS RALPH E. ANDERSON 081-004625 LICENSED STRUCTURAL ENGINEER SPRINGFIELD

GENERAL NOTES

Fasteners shall be high strength bolts. Bolts $\frac{7}{8}$" φ, open holes $\frac{15}{16}$" φ, unless otherwise noted.

Field welding of construction accessories will not be permitted to the bottom flange of beams or girders nor to the top flange for a distance equal to one-fourth the span length each way from the pier supports. Field welding in other areas will be permitted only when approved by the Engineer.

Anchor bolts shall be set before bolting diaphragms over supports.

Reinforcement bars shall conform to the requirements of AASHTO M-31, M-42 or M-53 Grade 60.

Shoulder transition to wingwall shall be shaped with broken concrete. Cost incidental.

Plan dimensions and details relative to existing structure have been taken from existing plans and are subject to nominal construction variations. It shall be the Contractor's responsibility to verify such dimensions and details in the field and make necessary approved adjustments prior to construction or ordering of materials. Such variations shall not be cause for additional compensation for a change in the scope of the work, however, the Contractor will be paid for the quantity actually furnished at the unit price bid for the work.

Bridge Seat Sealer shall be applied to the seat area of the Abutments.

The Contractor will be required to mark on top of the concrete deck, the locations of the top flange of all steel beams prior to any removal of the bridge concrete deck. Saw cutting directly over the top of the beam flanges is not permitted.

Bearing seat surfaces shall be constructed or adjusted to the designated elevations within a tolerance of ⅛ inch. Adjustment shall be made either by grinding the surface or by shimming the bearing. Two ⅛" adjusting shims, of the dimension of the bottom bearing plate, shall be provided for each bearing in addition to all other plates or shims. For Type I Elastomeric Bearings, shims of the dimensions of the top plate shall be provided as detailed.

The Inorganic Zinc-silicate Acrylic/Acrylic paint system shall be used for shop and field painting of New Structural Steel except where otherwise noted. The color of the acrylic finish coat shall be as shown in table.

Cleaning and painting of existing structural steel shall be as specified in the Special Provisions for "Cleaning and Painting Existing Steel Structures". All existing structural steel within 5 feet of either side of expansion joints shall be cleaned by Method I. All remaining existing structural steel shall be cleaned by Method 2. The Lead and Chromate Free Alkyd Paint System shall be used for painting of existing structural steel. The prime and intermediate coats shall be applied as specified in the special provisions, followed by a spot final finish coat over all newly primed steel surfaces. The color of the final finish coat shall be as shown in table.

The estimated area to be cleaned by Method 1 is 1968 sq. ft.

Prior to pouring the new concrete for the deck, all loose rust, loose mill scale and all other loose, detrimental foreign material shall be removed from the embedded portions of flanges of stringers (beams). The removal shall be accomplished in accordance with the requirements of the SSPC Surface Preparation Specifications SP-3 for power tool cleaning or SP-2 for hand tool cleaning. Cost shall be incidental to Concrete Removal.

STATION 905+20.00
REBUILT 19 BY
STATE OF ILLINOIS
F.A.I. RT.74 SEC.(90-15B)I-1
F.A. PROJ.IM-74-4(199)100
LOADING HS20 & ALT.
STR. NO. 090-0023

NAME PLATE
Showing East Bound
See Std. 2113

STATION 905+20.00
REBUILT 19 BY
STATE OF ILLINOIS
F.A.I. RT.74 SEC.(90-15B)I-1
F.A. PROJ.IM-74-4(199)100
LOADING HS20 & ALT.
STR. NO. 090-0024

NAME PLATE
Showing West Bound
See Std. 2113

TOTAL BILL OF MATERIAL

ITEM	UNIT	SUPER	SUB	TOTAL
Concrete Removal	Cu. Yd.		23.8	23.8
Reinforcement Bars, Epoxy Coated	Pound	72,730	6,520	79,250
* Protective Coat	Sq. Yd.	249		249
Jack and Remove Existing Bearings	Each		72	72
Removal of Existing Concrete Deck	Each	2		2
Structure Excavation	Cu. Yd.		2.4	2.4
Floor Drains	Each	24		24
Preformed Joint Seal 2½"	Lin. Ft.	96		96
Preformed Joint Seal 4"	Lin. Ft.	96		96
Class X Concrete Superstructure	Cu. Yd.	386.9		386.9
Elastomeric Bearing Assembly Type I	Each		36	36
Elastomeric Bearing Assembly Type II	Each		18	18
Structural Steel	Lbs.	14,470		14,470
** Name Plates	Each	2		2
Bridge Seat Sealer	Sq. Ft.		496	496
Slopewall Repair	Sq. Yd.		16	16
Bridge Deck Grooving	Sq. Yd.	1162		1162
Bar Splicers	Each	664	16	680
Class X Concrete	Cu. Yd.		11.4	11.4
Bituminous Concrete Surface Removal (Asbestos)	Sq. Yd.	1135		1135
Power Tool Cleaning Residue Containment and Disposal	L.S.	0.33		0.33
Cleaning and Painting Steel Bridge	L.S.	1		1
Blasting Residue Containment and Disposal	L.S.	0.33		0.33

* Quantity is for top & inside surfaces of parapets.

** Existing Name Plates shall be cleaned and relocated next to new plates. Cost incidental to Name Plates.

PAINT TABLE

Interior Beams	Light Grey Munsell No. 10Y 7/1
Fascia beams	Interstate Green Munsell No. 7.5G 4/8

LOADING HS20-44 & ALT.

Allow 25#/sq. ft. for future wearing surface.

DESIGN SPECIFICATIONS

1992 AASHTO and 1983 Seismic Retrofitting Guidelines for Highway Bridges FHWA/RD-83/007

DESIGN STRESSES

FIELD UNITS

New Construction

f'_c = 3,500 psi
f_y = 60,000 psi (reinforcement)
f_s = 20,000 psi (str. stl.-M270 Gr. 36)

Old Construction

f_s = 18,000 psi (exist. structural steel)

SEISMIC DATA

S.P.C. = A
"A" = 4%g
Site Coefficient = 1.2

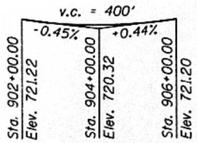

PROFILE GRADE
(along ℄ roadway)

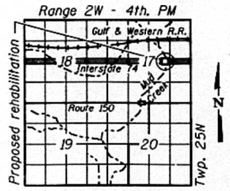

LOCATION SKETCH

GENERAL PLAN
INTERSTATE 74 OVER
MUD CREEK
F.A.I. ROUTE 74 - SEC. (90-15B)I-1
TAZEWELL COUNTY
STA. 905+20.00
STRUCTURE NO. 090-0023 (E.B.)
STRUCTURE NO. 090-0024 (W.B.)

STATE OF ILLINOIS
DEPARTMENT OF TRANSPORTATION

ROUTE NO.	SECTION	COUNTY	TOTAL SHEETS	SHEET NO.
F.A.I. 74	(90-15B) I-1	TAZEWELL	113	SHEET NO. 7 / 23 SHEETS
FED. ROAD DIST. NO. 7	ILLINOIS	FED. AID PROJECT-		

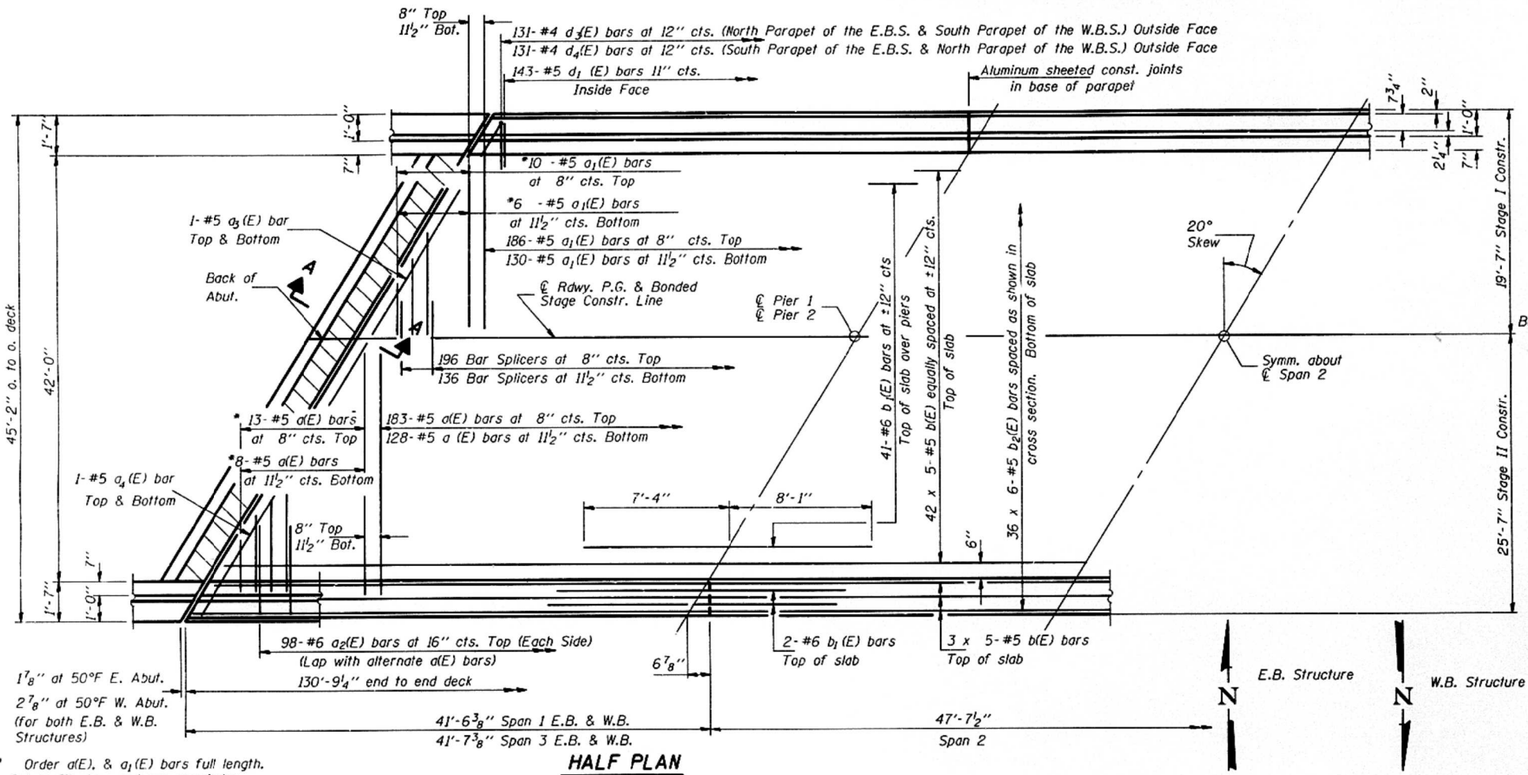

* Order a(E), & a1(E) bars full length. Cut to fit skew and use remainder of bars in opposite end.

HALF PLAN

(E.B. Structure Shown. W.B. similar by 180° rotation except as noted.)

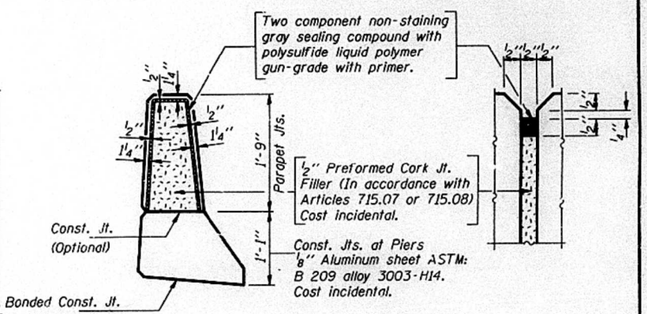

PARAPET JOINT DETAILS

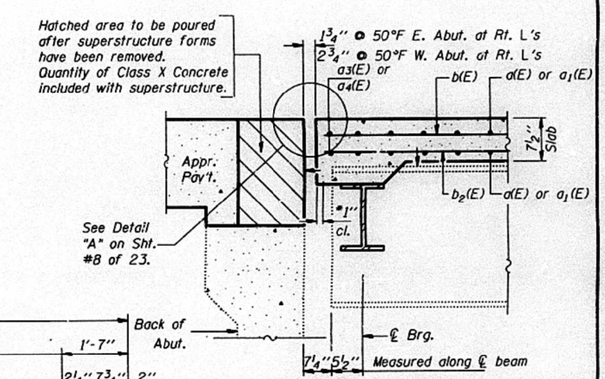

SECTION A-A

MIN. BAR LAP

#5 bars = 2'-2"

Notes: See Sheet #8 of 23 for superstructure details and Bill of Material.
Reinforcement bars designated (E) shall be epoxy coated.
Bars indicated thus 20 x 3- #5 etc. indicates 20 lines of bars with 3 lengths per line.
See Sheet #8 of 23 for parapet reinforcement.

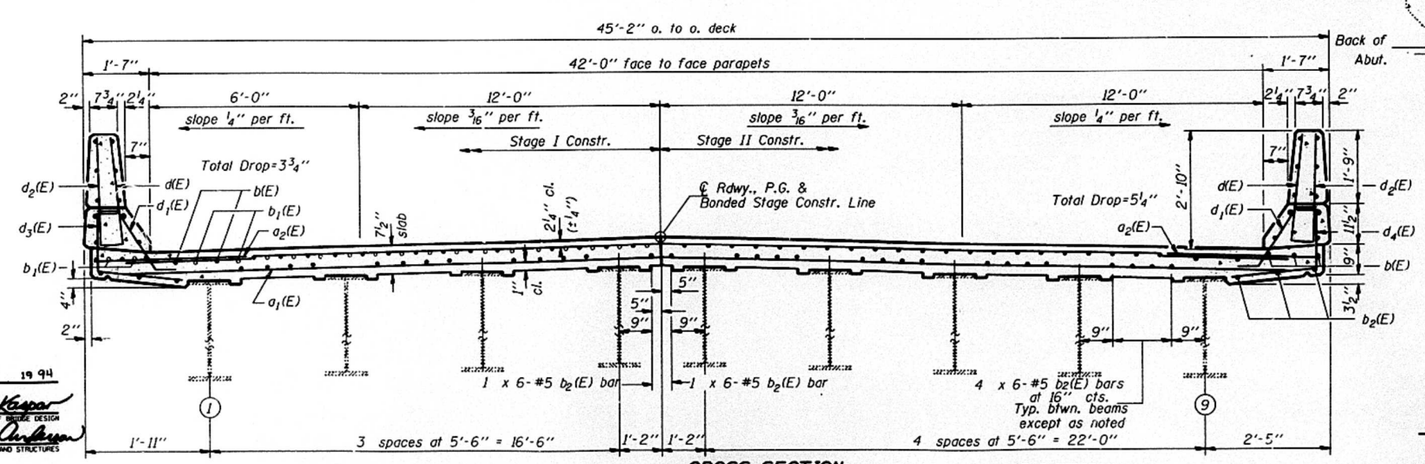

CROSS SECTION

(Looking East - E.B. Structure)
(Looking West - W.B. Structure)

FOR INFORMATION ONLY

DESIGNED	Jeffrey P. Vitt	March 30 1994
CHECKED	Chris A. Snyders	EXAMINED Craig J. Kasper, ENGINEER OF BRIDGE DESIGN
DRAWN	SHANE SUMNER	PASSED Ralph E. Anderson, ENGINEER OF BRIDGES AND STRUCTURES
CHECKED	JPV CAS	

S-1-L(>15°) 7-1-91

SUPERSTRUCTURE
INTERSTATE 74 OVER
MUD CREEK
F.A.I. ROUTE 74 - SEC. (90-15B)I-1
TAZEWELL COUNTY
STA. 905+20.00

MODEL: Default
FILE NAME: P:\2019\190388\W06 I-74 Bridge PSEs\4 CADD - DWG\4.4 Struc\0900023-0024\0900023-0024-68F54-020 Existing Superstructure.dgn

TWM ENGINEERING GEOSPATIAL SERVICES	TWM, INC. WWW.TWM-INC.COM	USER NAME = ckoltveit	DESIGNED - NP	REVISED -
	IL DESIGN FIRM LICENSE NO: 184-001220		CHECKED - ALN	REVISED -
		PLOT SCALE = 0:2.0000 ':" / in.	DRAWN - NP	REVISED -
		PLOT DATE = 12/1/2020	CHECKED - ALN	REVISED -

STATE OF ILLINOIS
DEPARTMENT OF TRANSPORTATION

EXISTING SUPERSTUCTURE
SN 090-0023 & 090-0024

SHEET 20 OF 33 SHEETS

F.A.I. RTE.	SECTION	COUNTY	TOTAL SHEETS	SHEET NO.
74	90-15[HB(1-4);VB;B]BP,BJR,BRR	TAZEWELL	192	131
		CONTRACT NO. 68F54		
		ILLINOIS	FED. AID PROJECT	

ROUTE NO.	SECTION	COUNTY	TOTAL SHEETS	SHEET NO.
F.A.I. 74	(90-15B) 1-1	TAZEWELL		114
FED. ROAD DIST. NO. 7	ILLINOIS	FED. AID PROJECT-		

SHEET NO. 8
23 SHEETS

STATE OF ILLINOIS
DEPARTMENT OF TRANSPORTATION

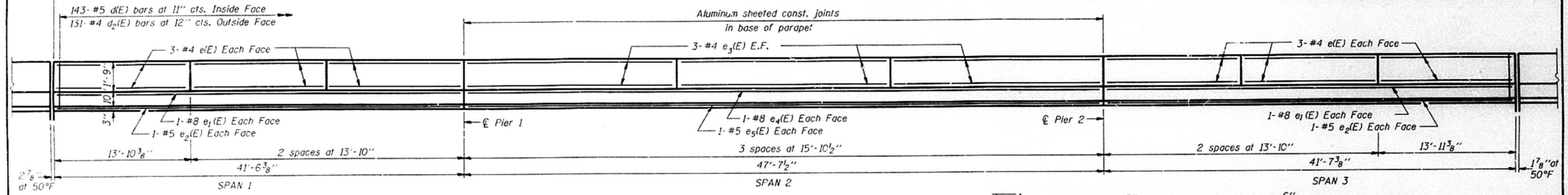

INSIDE ELEVATION OF PARAPET
(Looking North)

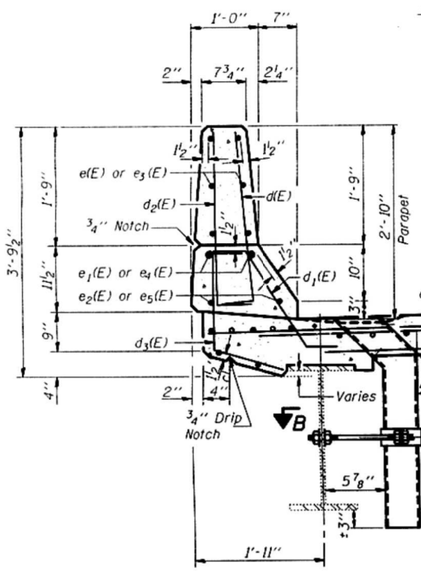

SECTION THRU PARAPET
(N. Parapet, E.B.S. & S. Parapet, W.B.S.)

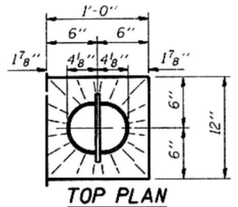

TOP PLAN
(N. Parapet, E.B.S. & S. Parapet, W.B.S.)

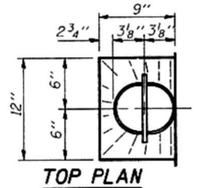

TOP PLAN
(S. Parapet, E.B.S. & N. Parapet, W.B.S.)

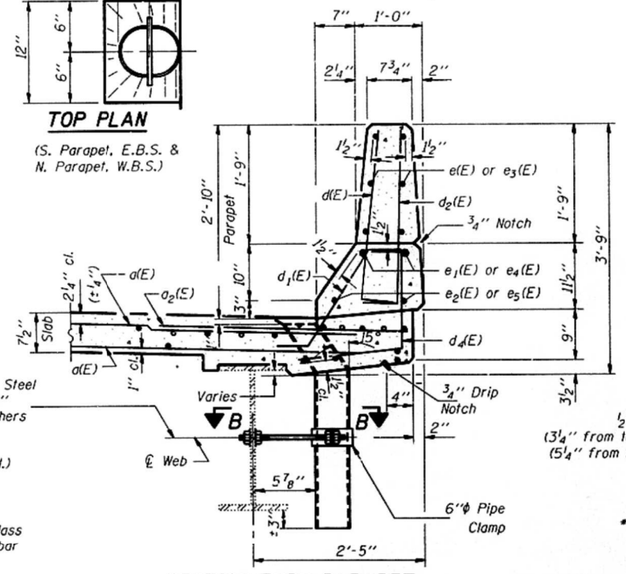

SECTION THRU PARAPET
(S. Parapet, E.B.S. & N. Parapet, W.B.S.)

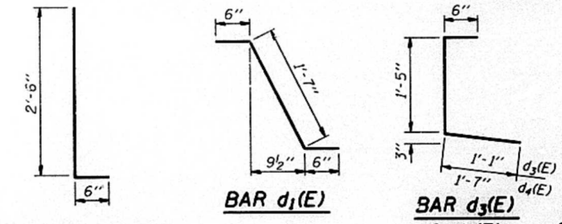

BARS d(E) & d2(E)

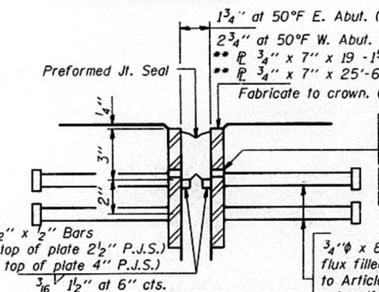

DETAIL A

7/16"φ Holes at 12" cts. for ⅜"φ bolts. All bolts shall be burned, sawed or chipped off flush with the plates after forms are removed. (Typ.)

¾"φ x 8" Granular or solid flux filled headed studs conforming to Article 710.38 of the Std. Specs. automatically end welded at 12" ctr. cts. (20 Required Stage I Constr.) (26 Required Stage II Constr.)

** Furnish in segments of 20 ft. maximum length. Maximum space between installed segments shall be 3/16". Seal space with Silicone Sealant suitable for Structural Steel.

TWO SUPERSTRUCTURES BILL OF MATERIAL

Bar	No.	Size	Length	Shape
d(E)	664	#5	24'-5"	
d1(E)	664	#5	18'-5"	
d2(E)	392	#6	4'-0"	
d3(E)	8	#5	20'-3"	
d4(E)	8	#5	26'-8"	
b(E)	480	#5	28'-1"	
b1(E)	180	#6	15'-5"	
b2(E)	432	#5	23'-9"	
d(E)	572	#5	3'-0"	
d1(E)	572	#5	2'-7"	
d2(E)	524	#4	3'-0"	
d3(E)	262	#4	3'-0"	
d4(E)	262	#4	3'-6"	
e(E)	144	#4	13'-6"	
e1(E)	16	#8	40'-9"	
e2(E)	16	#5	40'-9"	
e3(E)	72	#4	15'-6"	
e4(E)	8	#8	47'-3"	
e5(E)	8	#5	47'-3"	
Reinforcement Bars, Epoxy Coated			Lbs.	72,730
Class X Concrete Superstructure			Cu. Yds.	386.9
Bar Splicers			Each	664

Reinforcement bars designated (E) shall be epoxy coated.

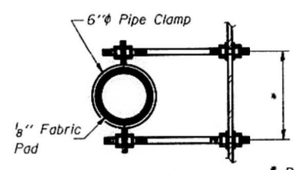

SECTION B-B

* Dimension as required by Pipe Clamp

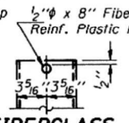

FIBERGLASS PIPE

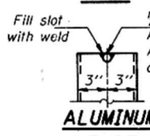

ALUMINUM TUBE

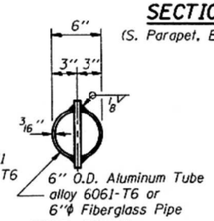

TOP PLAN
(Showing Aluminum Tube)

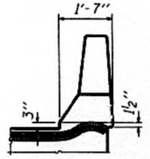

END TREATMENT

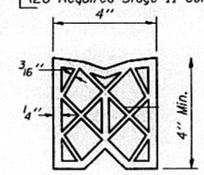

PREFORMED JOINT SEAL (4")

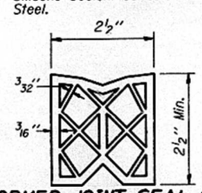

PREFORMED JOINT SEAL (2½")

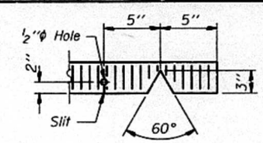

SEAL CUT-OUT (4")

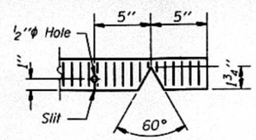

SEAL CUT-OUT (2½")

FOR INFORMATION ONLY

SUPERSTRUCTURE DETAILS
INTERSTATE 74 OVER
MUD CREEK
F.A.I. ROUTE 74 - SEC. (90-15B)I-1
TAZEWELL COUNTY
STA. 905+20.00

DESIGNED	
CHECKED	
DRAWN	DWANE SUMMER
CHECKED	

March 30 1994
EXAMINED — ENGINEER OF BRIDGE DESIGN
PASSED — ENGINEER OF BRIDGES AND STRUCTURES

Notes:
The exterior surfaces of the Floor Drain shall be painted with the paint system specified for Structural Steel. The exterior surfaces of the drain shall be cleaned and given a washcoat pretreatment in accordance with Steel Structures Painting Council's Spec. SSPC-SP1 & SSPC-Paint 27 prior to painting.
Fiberglass pipe shall conform to ASTM: D2996, with short-time rupture strength hoop tensile stress of 30,000 p.s.i. minimum. The surface of the Fiberglass pipe shall be free of bond inhibiting agents.

STATE OF ILLINOIS
DEPARTMENT OF PUBLIC WORKS & BUILDINGS
DIVISION OF HIGHWAYS

FAI-74

ROUTE No.	SEC.	COUNTY	TOTAL SHEETS	SHEET NO.
5	90-15B	TAZEWELL	19	7
FED. ROAD DIST. No. 7	ILLINOIS	PROJECT		

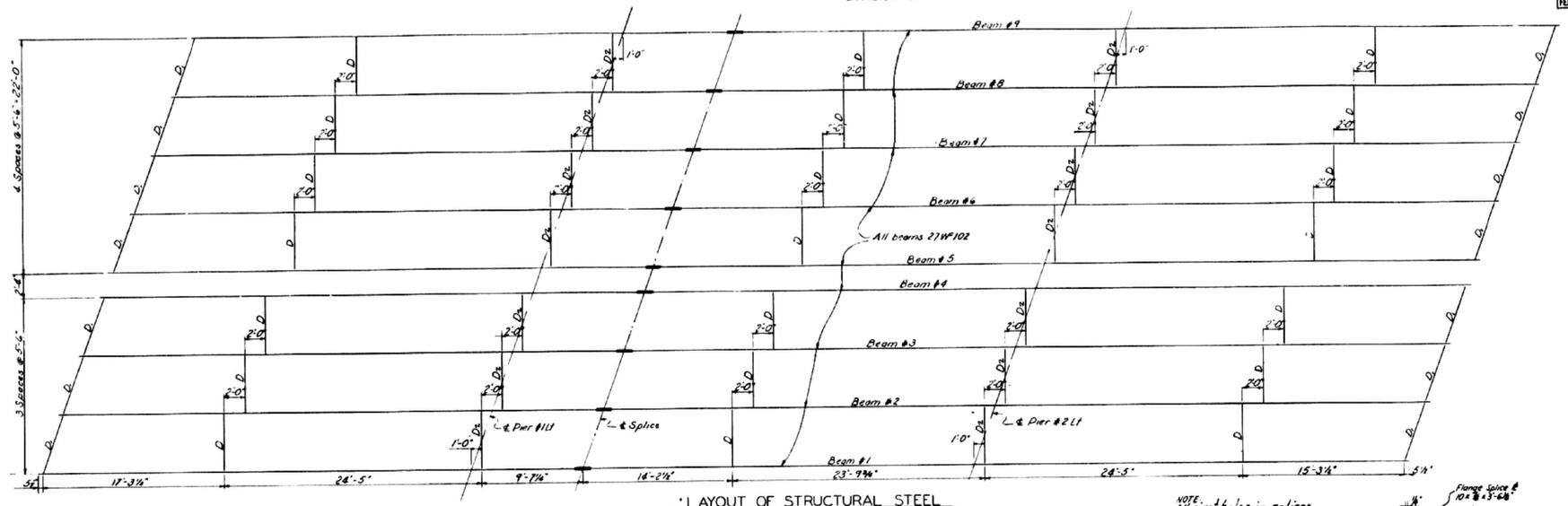

LAYOUT OF STRUCTURAL STEEL

ELEVATIONS OF TOP OF BEAMS

RIGHT PAVEMENT BRIDGE LOCATION	BEAM No.	ELEV.	LEFT PAVEMENT BRIDGE LOCATION	BEAM No.	ELEV.
W. ABUT.	1	719.70	W. ABUT.	1	719.73
	2	719.78		2	719.81
	3	719.85		3	719.90
	4	719.90		4	719.95
	5	719.96		5	719.99
	6	719.95		6	719.90
	7	719.88		7	719.83
	8	719.80		8	719.76
	9	719.61		9	719.57
PIER #1	1	719.70	PIER #1	1	719.81
	2	719.85		2	719.90
	3	719.91		3	719.97
	4	719.95		4	720.03
	5	719.95		5	720.03
	6	719.91		6	719.99
	7	719.88		7	719.97
	8	719.78		8	719.86
	9	719.60		9	719.75
SPLICE	1	719.74	SPLICE	1	719.83
	2	719.81		2	719.93
	3	719.85		3	720.01
	4	719.93		4	720.06
	5	719.98		5	720.05
	6	719.96		6	720.03
	7	719.86		7	719.96
	8	719.76		8	719.87
	9	719.65		9	719.77
PIER #2	1	719.73	PIER #2	1	719.96
	2	719.96		2	720.09
	3	720.06		3	720.11
	4	720.07		4	720.17
	5	720.07		5	720.17
	6	720.01		6	720.13
	7	719.96		7	720.07
	8	719.82		8	719.97
	9	719.70		9	719.87
E. ABUT.	1	720.02	E. ABUT.	1	720.09
	2	720.11		2	720.19
	3	720.17		3	720.27
	4	720.21		4	720.33
	5	720.21		5	720.33
	6	720.15		6	720.29
	7	720.07		7	720.23
	8	719.93		8	720.15
	9	719.84		9	720.08

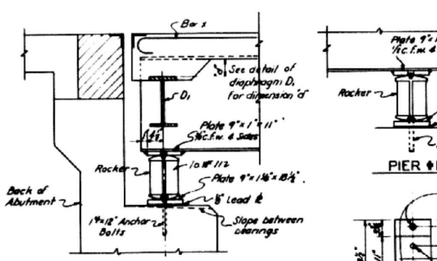

SECTION AT ABUTMENT

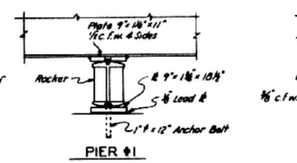

PIER #1

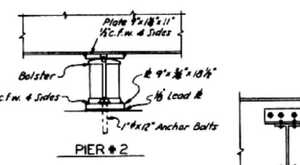

PIER #2

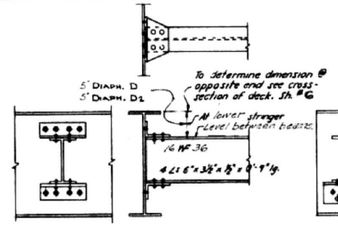

DIAPHRAGM D 21 REQUIRED (1 BRIDGE)
DIAPHRAGM D2 14 REQUIRED (1 BRIDGE)

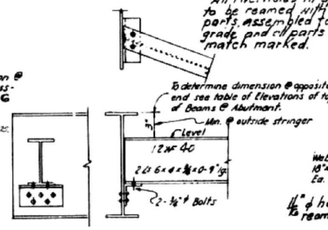

DIAPHRAGM D1
14 REQUIRED (1 BRIDGE)

NOTE:
All rivet holes in splices to be reamed with all parts assembled to grade and all parts match marked.

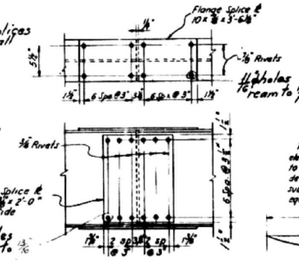

DETAIL OF SPLICE

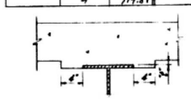

DETAIL OF FILLET

To determine fillet height 'F' after all structural steel has been erected, elevations of the top flanges of the beams shall be taken at intervals not to exceed 10 ft. From these elevations subtract the increment of deflection determined from the D.L. Deflection Diagram. The elevations so obtained subtracted from the theoretical grade elevations, minus the floor thickness equals 'F'.

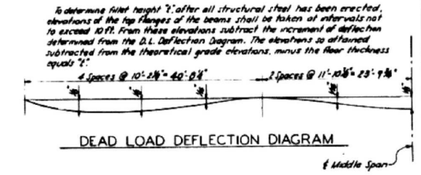

DEAD LOAD DEFLECTION DIAGRAM

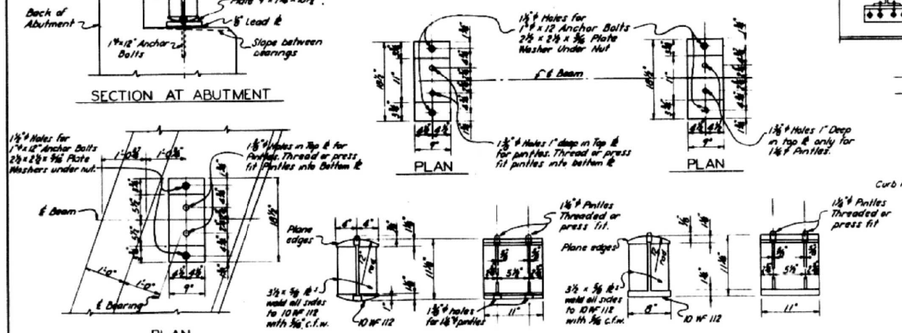

PLAN

DETAIL OF BEARING AT PIER #1

DETAIL OF BEARING AT PIER #2

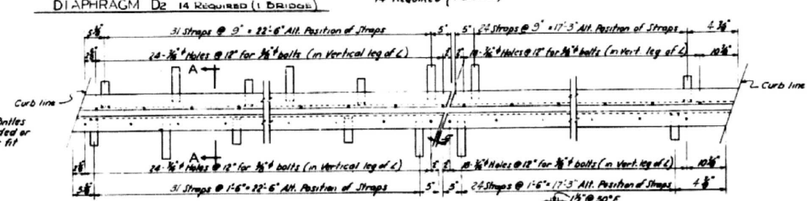

PLAN

NOTE:
All bolts shall be burned, sawed or clipped off flush with angle after forms are removed.
Expansion device at W. Abut. Lt. shown. For layout at other abuts. see Sh. #4

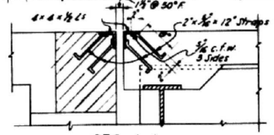

SEC A-A

EXPANSION DEVICE

NOTE:
Deck of Left Bridge shown. Right Bridge deck is identical, rotated around 180°.

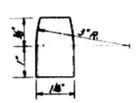

DETAIL OF PINTLE

DESIGNED		
CHECKED		
DRAWN		
CHECKED		

APRIL 24 1958
EXAMINED — ENGINEER OF BRIDGES AND TRAFFIC STRUCTURES
PASSED — ENGINEER OF DESIGN
APPROVED — CHIEF HIGHWAY ENGINEER

FOR INFORMATION ONLY

STRUCTURAL STEEL DETAILS
F.A.I. ROUTE 5 - SECTION 90-15B

F.A.I. ROUTE 5 OVER MUD CREEK
STATION 905+20.00
TAZEWELL COUNTY

WARREN AND VAN PRAAG, INC.
CONSULTING ENGINEERS - DECATUR, ILLINOIS

STATE OF ILLINOIS
DEPARTMENT OF TRANSPORTATION

ROUTE NO.	SECTION	COUNTY	TOTAL SHEETS	SHEET NO.
F.A.I. 74	(90-15B) I-1	TAZEWELL	115	SHEET NO. 9 / 23 SHEETS
FED. ROAD DIST. NO. 7	ILLINOIS	FED. AID PROJECT-		

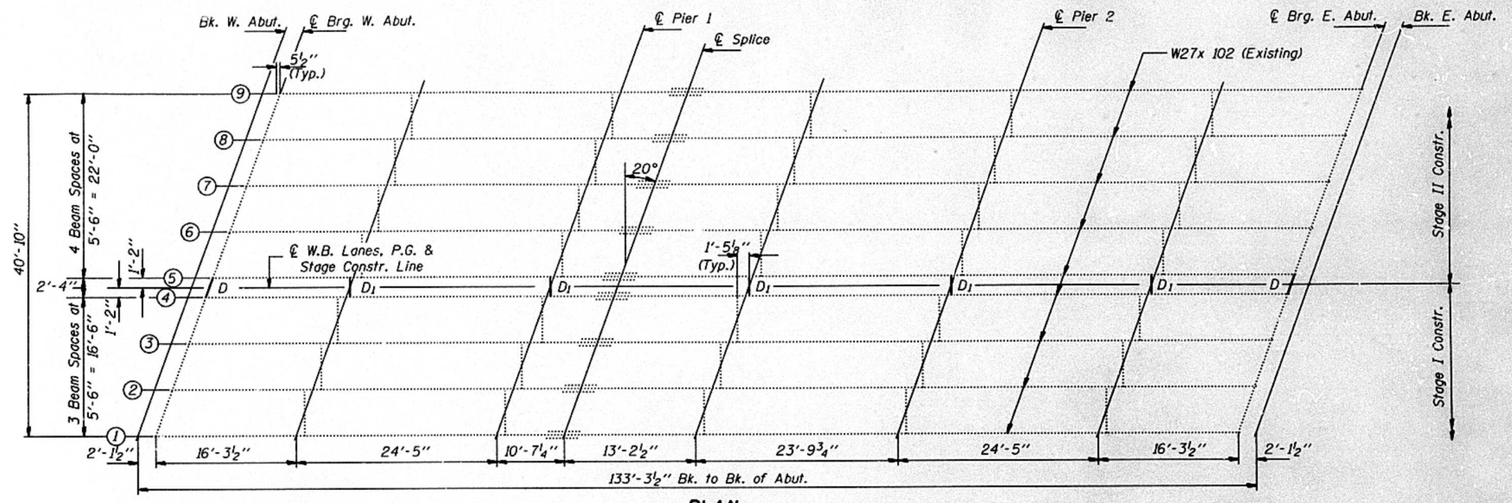

PLAN

Westbound Lanes

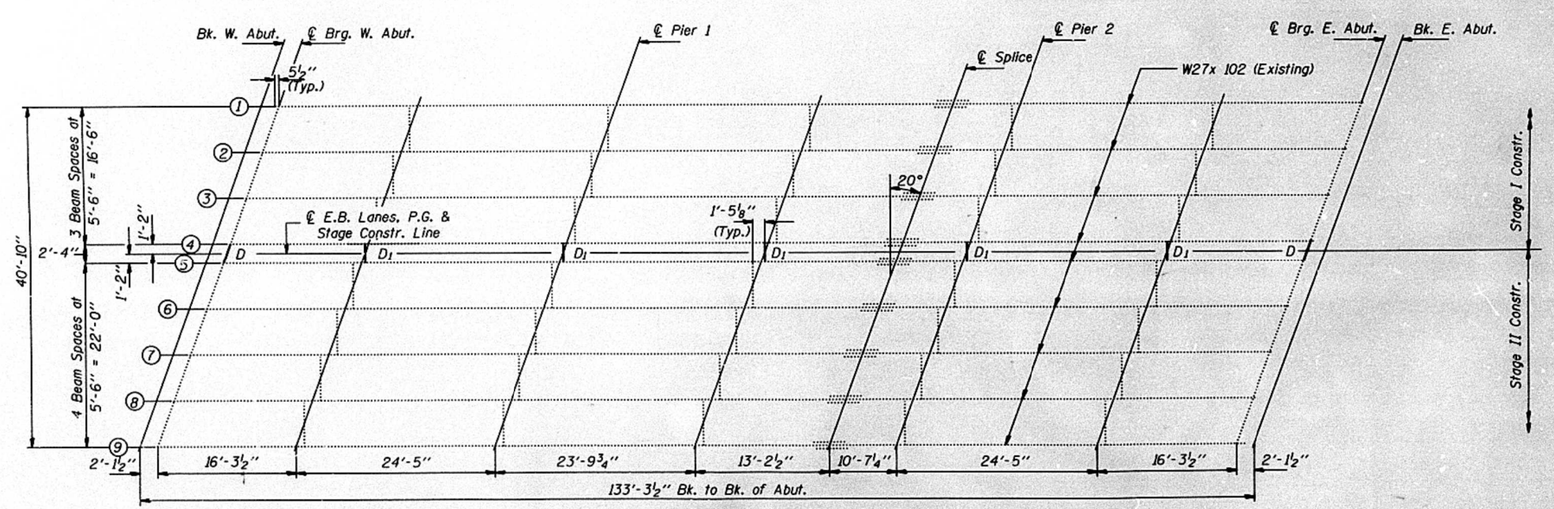

PLAN

Eastbound Lanes

N

DESIGNED	Jeffrey P. Voltz
CHECKED	Chris A. Sagner
DRAWN	SHANE SUMMER
CHECKED	JPV CAS

March 30 1999

EXAMINED Greg O. Hasper
ENGINEER OF BRIDGE DESIGN

PASSED Ralph E. Anderson
ENGINEER OF BRIDGES AND STRUCTURES

FOR INFORMATION ONLY

STRUCTURAL STEEL
INTERSTATE 74 OVER
MUD CREEK
F.A.I. ROUTE 74 - SEC. (90-15B)I-1
TAZEWELL COUNTY
STA. 905+20.00

MODEL: Default
FILE NAME: P:\2019\190388\WO6 I-74 Bridge PSEs\4 CADD - DWG\4.4 Struc\0900023-0024\0900023-0024-68F54-023 Existing Structural Steel Details.dgn

TWM ENGINEERING GEOSPATIAL SERVICES	TWM, INC. WWW.TWM-INC.COM	USER NAME = ckoltveit	DESIGNED - NP	REVISED -
	IL DESIGN FIRM LICENSE NO: 184-001220		CHECKED - ALN	REVISED -
		PLOT SCALE = 0:2.0000 ':' / in.	DRAWN - NP	REVISED -
		PLOT DATE = 12/1/2020	CHECKED - ALN	REVISED -

STATE OF ILLINOIS
DEPARTMENT OF TRANSPORTATION

EXISTING STRUCTURAL STEEL DETAILS
SN 090-0023 & 090-0024
SHEET 23 OF 33 SHEETS

F.A.I. RTE.	SECTION	COUNTY	TOTAL SHEETS	SHEET NO.
74	90-15[HB(1-4);VB;B]BP,BJR,BRR	TAZEWELL	192	134
		CONTRACT NO. 68F54		
		ILLINOIS	FED. AID PROJECT	

STATE OF ILLINOIS
DEPARTMENT OF TRANSPORTATION

ROUTE NO.	SECTION	COUNTY	TOTAL SHEETS	SHEET NO.
F.A.I. 74	(90-15B) I-1	TAZEWELL		116
FED. ROAD DIST. NO. 7		ILLINOIS	FED. AID PROJECT-	

SHEET NO. 10
23 SHEETS

INTERIOR BEAM MOMENT TABLE				
		0.4 Sp. 1 or 0.6 Sp. 3	Pier 1 or 2	0.5 Sp. 2
I_s	(in^4)	3620	3620	3620
S_s	(in^3)	267	267	267
w_L	(K/ft.)	0.920	0.920	0.920
M_{ℓ}	('K)	111.0	179.9	80.9
$M_{\mathbb{L}}$	('K)	184.7	142.9	178.5
M (Imp)	('K)	55.4	42.2	51.7
M (Total)	('K)	351.1	365.0	311.1
fs	(k.s.i.)	15.78	16.40	13.98

INTERIOR BEAM REACTION TABLE			
		E. & W. Abut.	Pier 1 & 2
R_{ℓ}	(K)	14.3	45.1
$R_{\mathbb{L}}$	(K)	26.2	33.4
Imp.	(K)	7.9	10.0
R (Total)	(K)	43.4	88.5

Is and Ss are the moment of inertia and section modulus of the steel section used in computing fs.

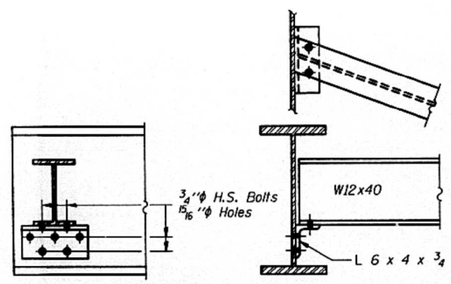

DIAPHRAGM D
4 Required

Note: Holes in angles for end diaphragms at existing beams shall be field drilled using existing holes in web as a template. The cost of field drilling shall be incidental to Structural Steel.
Attach diaphragm to beam 4 during Stage I Construction. Existing Concrete Deck that interferes with the placement of the diaphragm is to be removed.

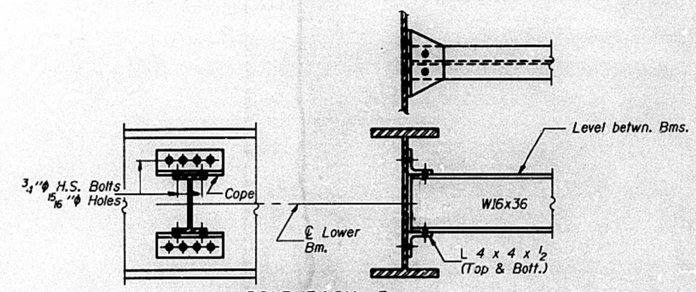

DIAPHRAGM D_1
10 Required

Note: Two hardened washers shall be required over all oversize holes for diaphragms.
Holes in the webs of Beams 4 & 5 for diaphragms D_1 shall be field drilled using holes in top and bottom clip angles as a template. The cost of field drilling shall be incidental to Structural Steel.

FOR INFORMATION ONLY

DESIGNED Jeffrey P. Voltz
CHECKED Chris A. Sugaski
DRAWN SHANE SUMMER
CHECKED JPV CAS

March 30 1994
EXAMINED Craig J. Kasper
ENGINEER OF BRIDGE DESIGN
PASSED Ralph E. Anderson
ENGINEER OF BRIDGES AND STRUCTURES

STRUCTURAL STEEL
INTERSTATE 74 OVER
MUD CREEK
F.A.I. ROUTE 74 - SEC. (90-15B)I-1
TAZEWELL COUNTY
STA. 905+20.00

MODEL: Default
FILE NAME: P:\2019\190388\WO6 I-74 Bridge PSEs\4 CADD - DWG\4.4 Struc\0900023-0024\0900023-0024-68F54-024 Existing Structural Steel Details.dgn

TWM ENGINEERING GEOSPATIAL SERVICES
TWM, INC.
WWW.TWM-INC.COM
IL DESIGN FIRM LICENSE NO: 184-001220

USER NAME = ckoltveit	DESIGNED - NP	REVISED -
	CHECKED - ALN	REVISED -
PLOT SCALE = 0:2.0000 ':' / in.	DRAWN - NP	REVISED -
PLOT DATE = 12/1/2020	CHECKED - ALN	REVISED -

STATE OF ILLINOIS
DEPARTMENT OF TRANSPORTATION

EXISTING STRUCTURAL STEEL DETAILS
SN 090-0023 & 090-0024
SHEET 24 OF 33 SHEETS

F.A.I. RTE.	SECTION	COUNTY	TOTAL SHEETS	SHEET NO.
74	90-15[HB(1-4);VB;B]BP,BJR,BRR	TAZEWELL	192	135
		CONTRACT NO. 68F54		
		ILLINOIS	FED. AID PROJECT	

STATE OF ILLINOIS
DEPARTMENT OF TRANSPORTATION

ROUTE NO.	SECTION	COUNTY	TOTAL SHEETS	SHEET NO.
F.A.I. 74	(90-15B) 1-1	TAZEWELL	117	SHEET NO. 11 / 23 SHEETS
FED. ROAD DIST. NO. 7	ILLINOIS	FED. AID PROJECT-		

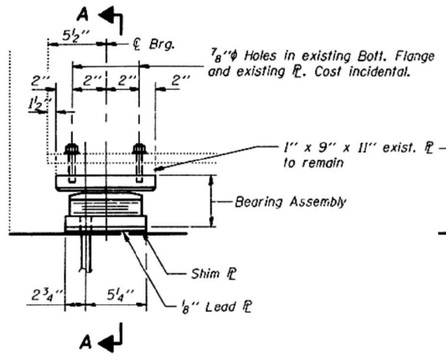

ELEVATION AT W. ABUT.

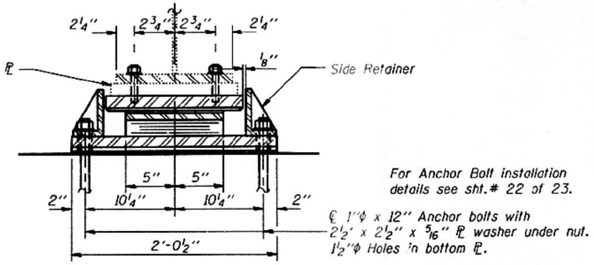

SECTION A-A

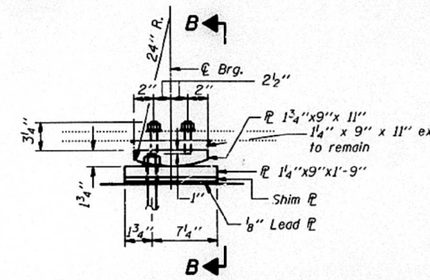

ELEVATION AT PIER 2

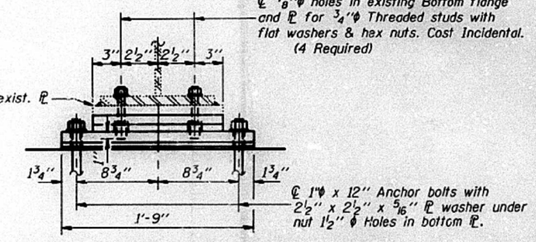

SECTION B-B

TYPE II TFE ELASTOMERIC EXP. BRG.

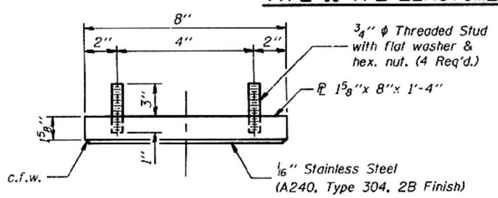

TOP BEARING ASSEMBLY
(18 Required)

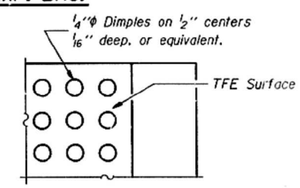

PLAN-TFE SURFACE

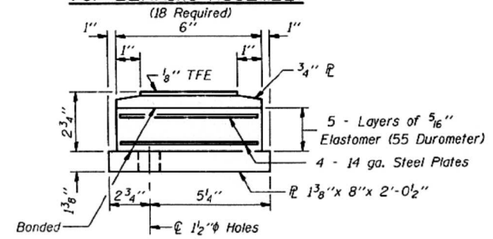

BOTTOM BEARING ASSEMBLY
(18 Required)

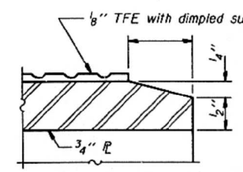

SECTION THRU TFE

Note: The ⅛" TFE sheet shall be bonded directly to the top steel plate with a two-component, medium viscosity epoxy resin, conforming to the requirements of the Federal Specification MMM-A-134, Type I. The bond agent shall be applied on the full area of the contact surfaces.

Bonding of ⅛" TFE sheet during vulcanizing process will be permitted provided the process and method of adjusting assembly height is approved by the Engineer.

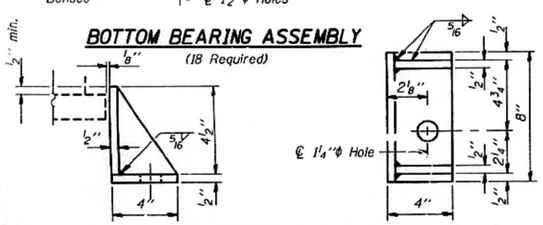

SIDE RETAINER
(108 Required, W. & E. Abut. & Pier 1)
Equivalent rolled angle with stiffeners will be allowed in lieu of welded plates.
(Weight incuded with Structural Steel)

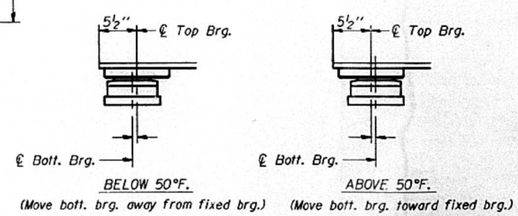

BELOW 50°F.
(Move bott. brg. away from fixed brg.)

ABOVE 50°F.
(Move bott. brg. toward fixed brg.)

SETTING ANCHOR BOLTS AT EXP. BRG.
D=⅛" per each 100' of expansion for every 15° temp. change from the normal temp. of 50°F.

DESIGNED	Jeffrey P. Voltz	
CHECKED	Chris A. Sizemore	
DRAWN	SHANE SUMMER	
CHECKED	JPV CAS	

MARCH 30 19 94

EXAMINED Greg J. Harper — ENGINEER OF BRIDGE DESIGN

PASSED Ralph E. Anderson — ENGINEER OF BRIDGES AND STRUCTURES

FIXED BEARING
(18 Required)

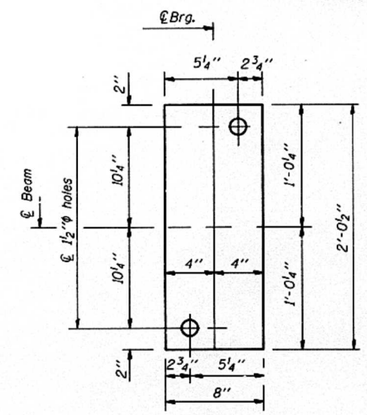

PLAN

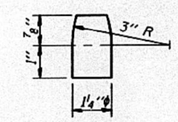

PINTLE

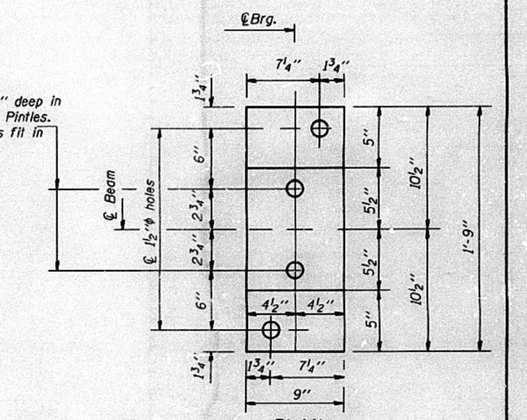

PLAN

*** See sht. #12 of 23 for Jack and Remove Existing Bearing Procedure.

FOR INFORMATION ONLY

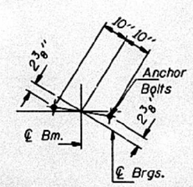

ANCHOR BOLT LOCATION AT W. ABUT.

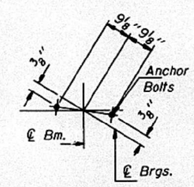

ANCHOR BOLT LOCATION AT PIER 2

BILL OF MATERIAL

Item	Unit	Total
Elastomeric Bearing Assembly Type II	Each	18
*** Jack and Remove Existing Bearings	Each	36

WEST ABUTMENT AND PIER 2
BEARING DETAILS
INTERSTATE 74 OVER
MUD CREEK
F.A.I. ROUTE 74 - SEC. (90-15B)I-1
TAZEWELL COUNTY
STA. 905+20.00

MODEL: Default
FILE NAME: P:\2019\1903BI\W06 I-74 Bridge PSEs\4 CADD - DWG\4.4 Struc\0900023-0024\0900023-0024-68F54-025_Existing Structural Steel Details.dgn

TWM ENGINEERING GEOSPATIAL SERVICES
TWM, INC. WWW.TWM-INC.COM
IL DESIGN FIRM LICENSE NO: 184-001220

USER NAME = ckoltveit	DESIGNED - NP	REVISED -	
	CHECKED - ALN	REVISED -	
PLOT SCALE = 0:2.0000 ':' / in.	DRAWN - NP	REVISED -	
PLOT DATE = 12/1/2020	CHECKED - ALN	REVISED -	

STATE OF ILLINOIS
DEPARTMENT OF TRANSPORTATION

EXISTING BEARING DETAILS
SN 090-0023 & 090-0024
SHEET 25 OF 33 SHEETS

F.A.I. RTE.	SECTION	COUNTY	TOTAL SHEETS	SHEET NO.
74	90-15[HB(1-4);VB;B]BP,BJR,BRR	TAZEWELL	192	136
		CONTRACT NO. 68F54		
		ILLINOIS FED. AID PROJECT		

STATE OF ILLINOIS
DEPARTMENT OF TRANSPORTATION

ROUTE NO.	SECTION	COUNTY	TOTAL SHEETS	SHEET NO.
F.A.I. 74	(90-15B) I-1	TAZEWELL	118	23 SHEETS
FED. ROAD DIST. NO. 7	ILLINOIS	FED. AID PROJECT-		

SHEET NO. 12

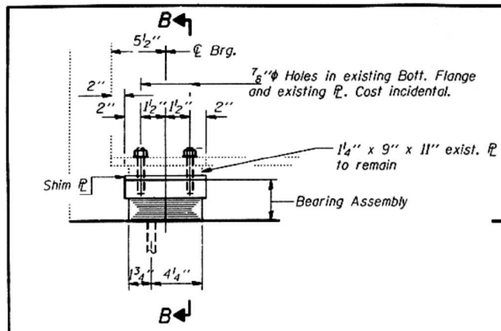

ELEVATION AT E. ABUT.

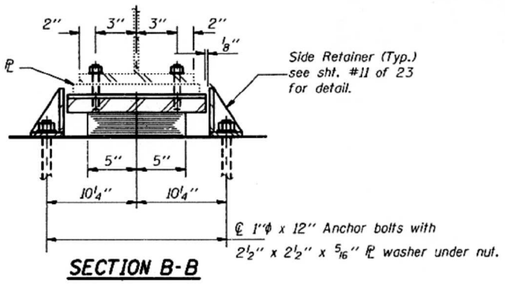

SECTION B-B

TYPE I ELASTOMERIC EXP. BRG.

For Anchor Bolt installation details see sht.# 22 of 23.

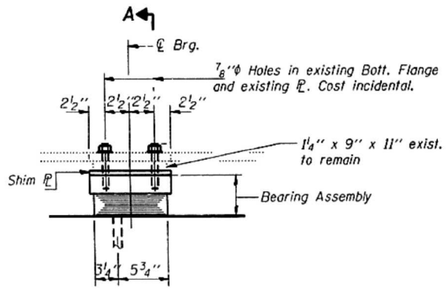

ELEVATION AT PIER 1

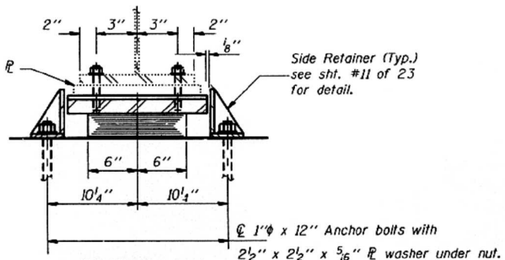

SECTION A-A

TYPE I ELASTOMERIC EXP. BRG.

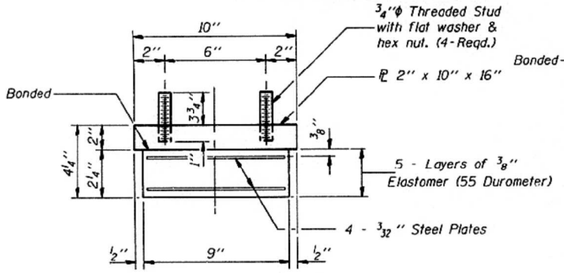

PIER 1 BEARING ASSEMBLY

(18 Required)

Note: Shim plates shall not be placed under Bearing Assembly.

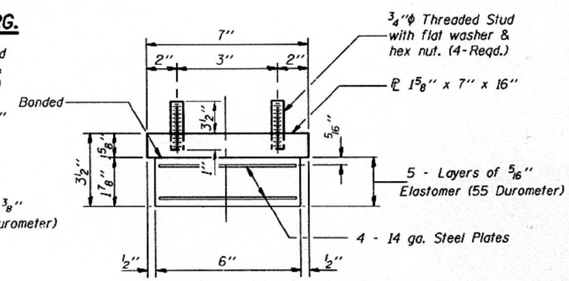

E. ABUT. BEARING ASSEMBLY

(18 Required)

Note: Shim plates shall not be placed under Bearing Assembly.

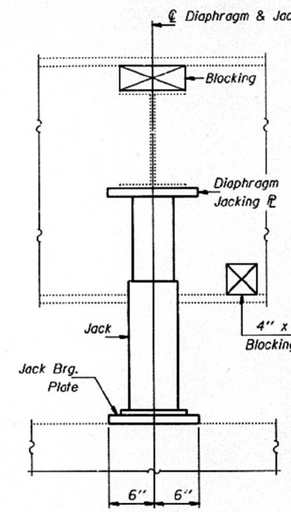

SECTION C-C

(Dimensions are at Rt. L's)

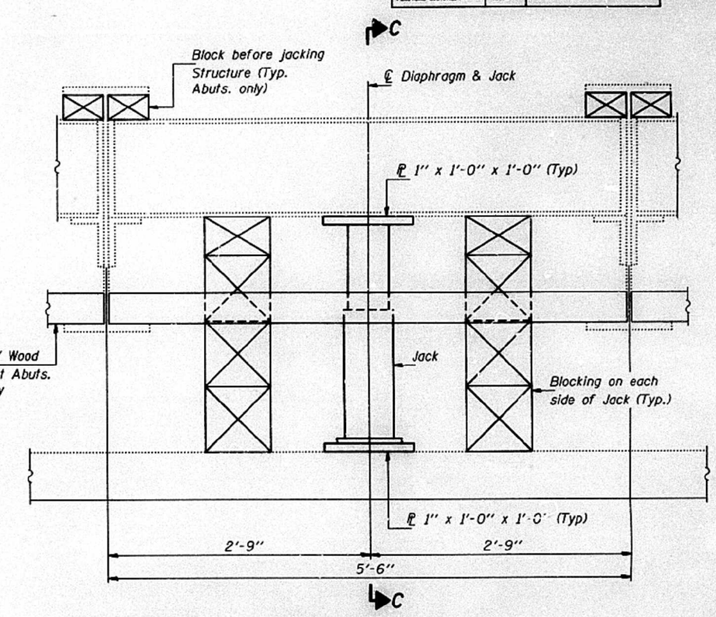

JACKING DETAILS

(Dimensions are at Rt. L's)

(Typical between Beams #1 & #2, #2 & #3, #3 & #4, #5 & #6, #6 & #7, #7 & #8, and #8 & #9.)

***PROCEDURE FOR JACKING AND REMOVING OF EXISTING BEARINGS

Jacking shall be limited to removing and replacing of existing bearings.

Anchor bolts shall be removed or cut off and ground flush with top of concrete. If anchor bolts are removed existing holes shall be filled with non-shrink grout.

With new bearings in position, new holes shall be drilled through base plate for new anchor bolts Maximum lift = ⅛"

The maximum dead load reaction with deck removed (per bearing) at each Abutment is 1.9 kips and 6.0 kips at each Pier.

The Jack capacity shall be 3 Tons at Abutments and 8 Tons at Piers.

Beams shall be jacked and cribbed, existing bearings shall be removed, new bearings shall be installed and jacks lowered after existing slab is removed and before new slab is poured.

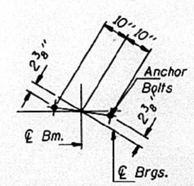

ANCHOR BOLT LOCATION AT PIER 1 & E.ABUT.

FOR INFORMATION ONLY

BILL OF MATERIAL

	Item	Unit	Total
	Elastomeric Bearing Assembly Type I	Each	36
***	Jack and Remove Existing Bearings	Each	36

EAST ABUTMENT AND PIER 1
BEARING DETAILS
INTERSTATE 74 OVER
MUD CREEK
F.A.I. ROUTE 74 - SEC. (90-15B)I-1
TAZEWELL COUNTY
STA. 905+20.00

March 30 1994

DESIGNED	NP	
CHECKED		
DRAWN	SHANE SUMMER	
CHECKED	JPV	CAS

EXAMINED — ENGINEER OF BRIDGE DESIGN
PASSED — ENGINEER OF BRIDGES AND STRUCTURES

MODEL: Default
FILE NAME: P:\2019\190388\WO6 I-74 Bridge PSEs\4 CADD - DWG\4.4 Struc\0900023-0024\0900023-0024-68F54-026 Existing Structural Steel Details.dgn

TWM ENGINEERING GEOSPATIAL SERVICES
TWM, INC.
WWW.TWM-INC.COM
IL DESIGN FIRM LICENSE NO: 184-001220

USER NAME = ckoltveit	DESIGNED - NP	REVISED -
	CHECKED - ALN	REVISED -
PLOT SCALE = 0:2.0000 ':' / in.	DRAWN - NP	REVISED -
PLOT DATE = 12/1/2020	CHECKED - ALN	REVISED -

STATE OF ILLINOIS
DEPARTMENT OF TRANSPORTATION

EXISTING BEARING DETAILS
SN 090-0023 & 090-0024

SHEET 26 OF 33 SHEETS

F.A.I. RTE.	SECTION	COUNTY	TOTAL SHEETS	SHEET NO.
74	90-15[HB(1-4);VB;B]BP,BJR,BRR	TAZEWELL	192	137

CONTRACT NO. 68F54

ILLINOIS | FED. AID PROJECT

STATE OF ILLINOIS
DEPARTMENT OF TRANSPORTATION

ROUTE NO.	SECTION	COUNTY	TOTAL SHEETS	SHEET
F.A.I. 74	(90-15B) I-1	TAZEWELL	122	SHEET NO. 16 / 23 SHEETS
FED. ROAD DIST. NO. 7	ILLINOIS	FED. AID PROJECT-		

* Epoxy grout v_4(E). & u(E) bars in $\frac{7}{8}$" diameter X 9" minimum drilled holes. The grout and the method of application shall be approved by the Department. (See Special Provisions).

** Bonded Construction Joint in accordance with Article 504.13(a)(2) of the Standard Specifications

Work this sheet with sheet 20 of 23.
Hatched area to be poured after Superstructure forms have been removed. Quantity of concrete included with Class X Concrete Superstructure on sht. 8 of 23.
Clean and Straighten existing reinforcement and incorporate into new construction.
All edges shall have standard $\frac{3}{4}$" chamfer except as noted.
Space Reinforcement to miss anchor bolts.

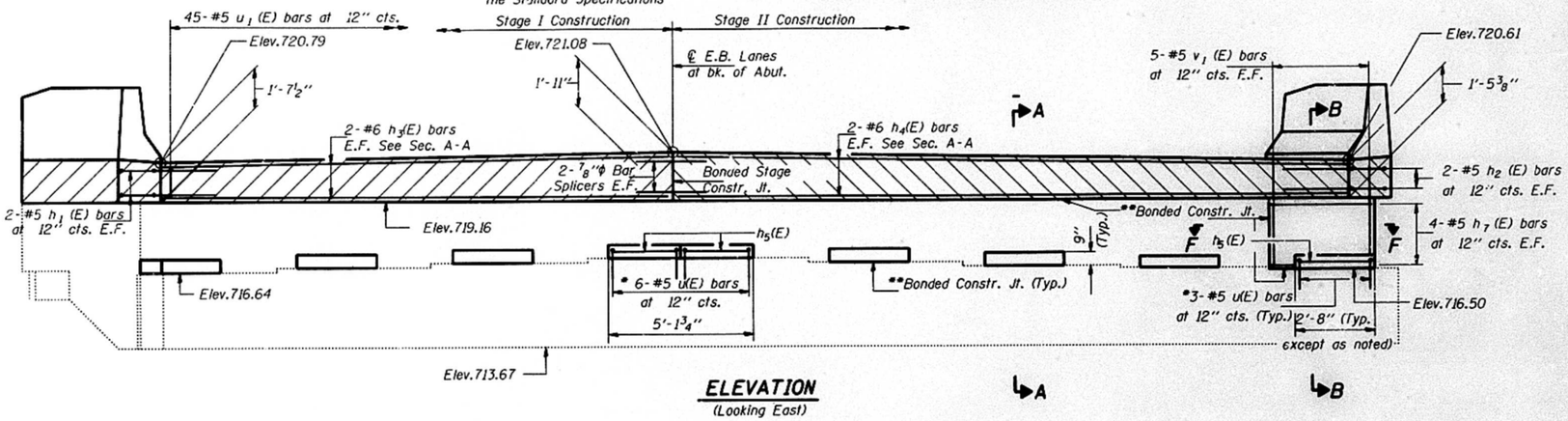

ELEVATION
(Looking East)

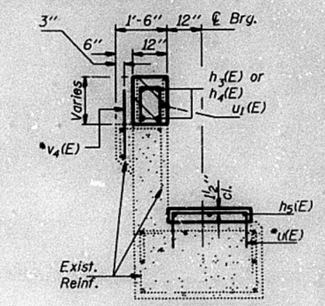

SECTION A-A

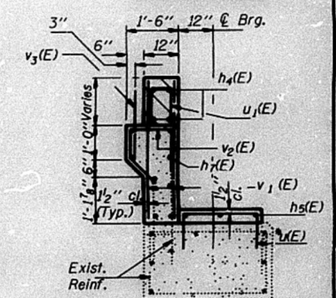

SECTION B-B

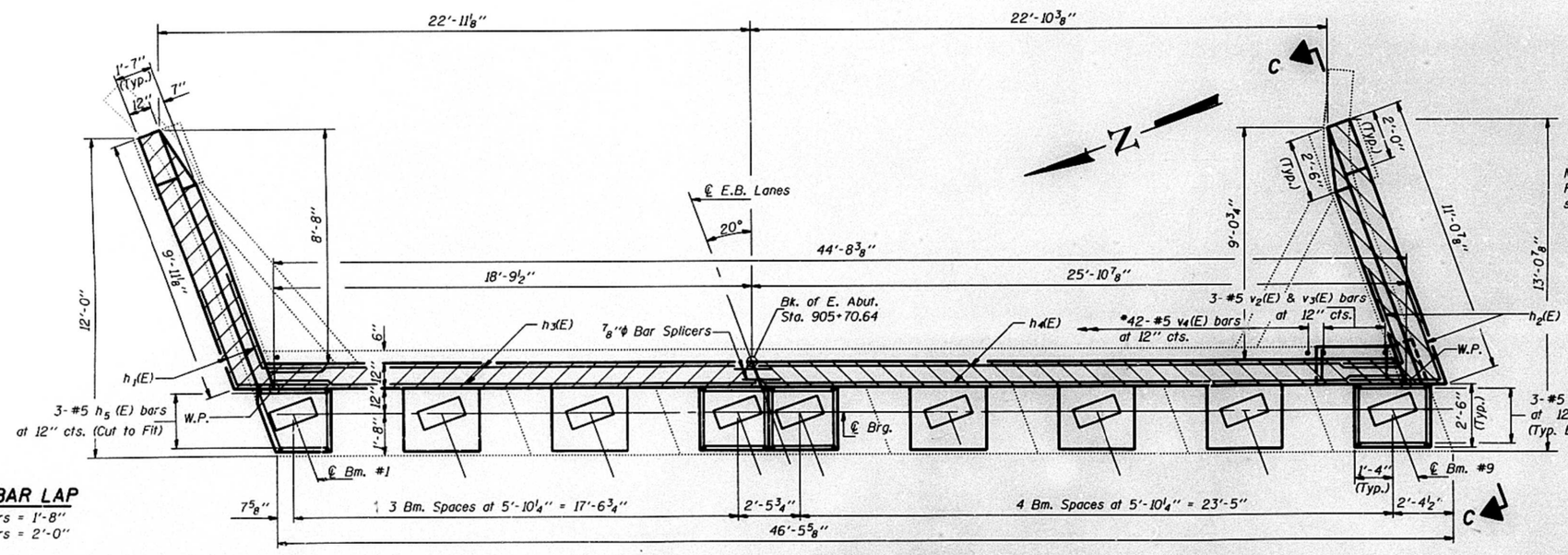

Note:
For Section C-C see sht. #20 of 23.

TOP OF PEDESTAL ELEVATION

Beam #1	717.39
Beam #2	717.48
Beam #3	717.54
Beam #4	717.58
Beam #5	717.58
Beam #6	717.52
Beam #7	717.44
Beam #8	717.35
Beam #9	717.26

MIN. BAR LAP
#5 bars = 1'-8"
#6 bars = 2'-0"

E.F.= Each Face

PLAN

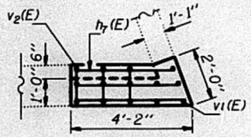

SECTION F-F

DESIGNED	Jeff P. Vitti	
CHECKED	Chris A. Sagner	
DRAWN	SHANE SUMMER	
CHECKED	JPV	CAS

March 30 1994
EXAMINED Greg J. Hasper — ENGINEER OF BRIDGE DESIGN
PASSED Ralph E. Anderson — ENGINEER OF BRIDGES AND STRUCTURES

FOR INFORMATION ONLY

E.B. EAST ABUTMENT DETAILS
INTERSTATE 74 OVER
MUD CREEK
F.A.I. ROUTE 74 - SEC. (90-15B)I-1
TAZEWELL COUNTY
STA. 905+20.00

MODEL: Default
FILE NAME: P:\2019\190388\WO6 I-74 Bridge PSEs\4 CADD - DWG\4.4 Struc\0900023-0024\0900023-0024-68F54-027 Existing Abutment Details.dgn

TWM ENGINEERING GEOSPATIAL SERVICES
TWM, INC. WWW.TWM-INC.COM
IL DESIGN FIRM LICENSE NO: 184-001220

USER NAME = ckoltveit	DESIGNED - NP	REVISED -	
	CHECKED - ALN	REVISED -	
PLOT SCALE = 0:2.0000 ':' / in.	DRAWN - NP	REVISED -	
PLOT DATE = 12/1/2020	CHECKED - ALN	REVISED -	

STATE OF ILLINOIS
DEPARTMENT OF TRANSPORTATION

EXISTING ABUTMENT DETAILS
SN 090-0023 & 090-0024
SHEET 27 OF 33 SHEETS

F.A.I. RTE.	SECTION	COUNTY	TOTAL SHEETS	SHEET NO.
74	90-15[HB(1-4);VB;B]BP,BJR,BRR	TAZEWELL	192	138
		CONTRACT NO. 68F54		
	ILLINOIS	FED. AID PROJECT		

STATE OF ILLINOIS
DEPARTMENT OF TRANSPORTATION

ROUTE NO.	SECTION	COUNTY	TOTAL SHEETS	SHEET NO.
F.A.I. 74	(90-15B) I-1	TAZEWELL	123	SHEET NO. 17 / 23 SHEETS
FED. ROAD DIST. NO. 7	ILLINOIS	FED. AID PROJECT-		

- * Epoxy grout v_4(E) & u_2(E) bars in $\frac{7}{8}$" diameter X 9" minimum drilled holes. The grout and the method of application shall be approved by the Department. (See Special Provisions).
- ** Bonded Construction Joint in accordance with Article 504.13(a)(2) of the Standard Specifications

Work this sheet with sheet 20 of 23.
Hatched area to be poured after Superstructure forms have been removed. Quantity of concrete included with Class X Concrete Superstructure on sht. 8 of 23.
Clean and Straighten existing reinforcement and incorporate into new construction.
All edges shall have standard $\frac{3}{4}$" chamfer except as noted.
Space Reinforcement to miss anchor bolts.

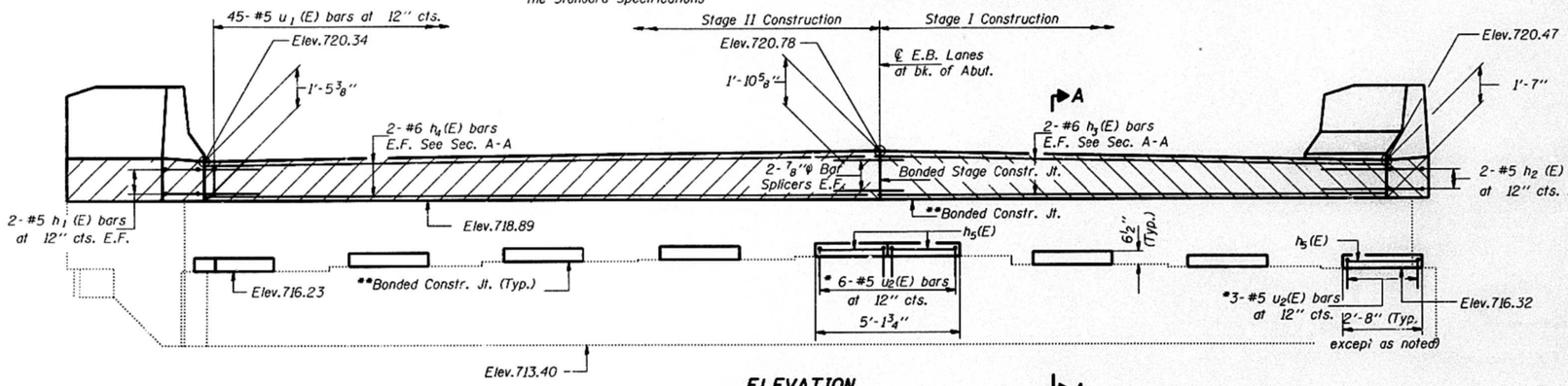

ELEVATION
(Looking East)

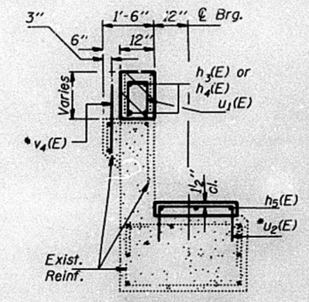

SECTION A-A

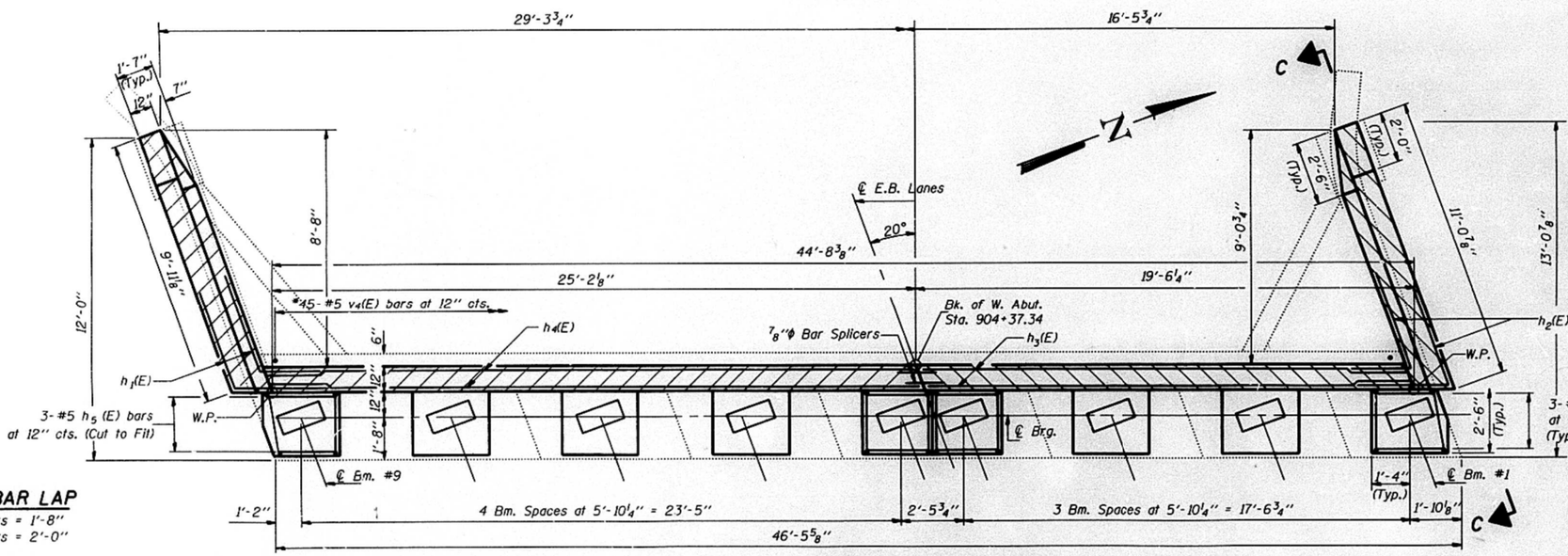

Note:
For Section C-C see sht. #20 of 23.

TOP OF PEDESTAL ELEVATION

Beam #1	716.86
Beam #2	716.95
Beam #3	717.01
Beam #4	717.06
Beam #5	717.06
Beam #6	717.01
Beam #7	716.94
Beam #8	716.85
Beam #9	716.77

MIN. BAR LAP
#5 bars = 1'-8"
#6 bars = 2'-0"

E.F.= Each Face

PLAN

DESIGNED	Jeff P Voite	March 30 1994
CHECKED	Chris A. Sagner	EXAMINED Greg. D. Kasper, ENGINEER OF BRIDGE DESIGN
DRAWN	SHANE SUMMER	PASSED Ralph E. Anderson, ENGINEER OF BRIDGES AND STRUCTURES
CHECKED	JPV CAS	

FOR INFORMATION ONLY

E.B. WEST ABUTMENT DETAILS
INTERSTATE 74 OVER
MUD CREEK
F.A.I. ROUTE 74 - SEC. (90-15B)I-1
TAZEWELL COUNTY
STA. 905+20.00

MODEL: Default
FILE NAME: P:\2019\1903BSWV06 I-74 Bridge PSEs\4 CADD - DWG\4.4 Struc\0900023-0024\0900023-0024-68F54-028 Existing Abutment Details.dgn

TWM ENGINEERING GEOSPATIAL SERVICES	TWM, INC. WWW.TWM-INC.COM	USER NAME = ckoltveit	DESIGNED - NP
	IL DESIGN FIRM LICENSE NO: 184-001220		CHECKED - ALN
		PLOT SCALE = 0:2.0000 ':' / in.	DRAWN - NP
		PLOT DATE = 12/1/2020	CHECKED - ALN

REVISED -
REVISED -
REVISED -
REVISED -

STATE OF ILLINOIS
DEPARTMENT OF TRANSPORTATION

EXISTING ABUTMENT DETAILS
SN 090-0023 & 090-0024
SHEET 28 OF 33 SHEETS

F.A.I. RTE.	SECTION	COUNTY	TOTAL SHEETS	SHEET NO.
74	90-15[HB(1-4);VB;B]BP,BJR,BRR	TAZEWELL	192	139
		CONTRACT NO. 68F54		
		ILLINOIS	FED. AID PROJECT	

STATE OF ILLINOIS
DEPARTMENT OF TRANSPORTATION

ROUTE NO.	SECTION	COUNTY	TOTAL SHEETS	SHEET NO.
F.A.I. 74	(90-15B) I-1	TAZEWELL		124
FED. ROAD DIST. NO. 7	ILLINOIS	FED. AID PROJECT-		

SHEET NO. 18
23 SHEETS

* Epoxy grout v_4(E), & u(E) bars in $\frac{7}{8}$" diameter X 9" minimum drilled holes. The grout and the method of application shall be approved by the Department. (See Special Provisions).

** Bonded Construction Joint in accordance with Article 504.13(a)(2) of the Standard Specifications

Work this sheet with sheet 20 of 23.
Hatched area to be poured after Superstructure forms have been removed. Quantity of concrete included with Class X Concrete Superstructure on sht. 8 of 23.
Clean and Straighten existing reinforcement and incorporate into new construction.
All edges shall have standard $\frac{3}{4}$" chamfer except as noted.
Space Reinforcement to miss anchor bolts.

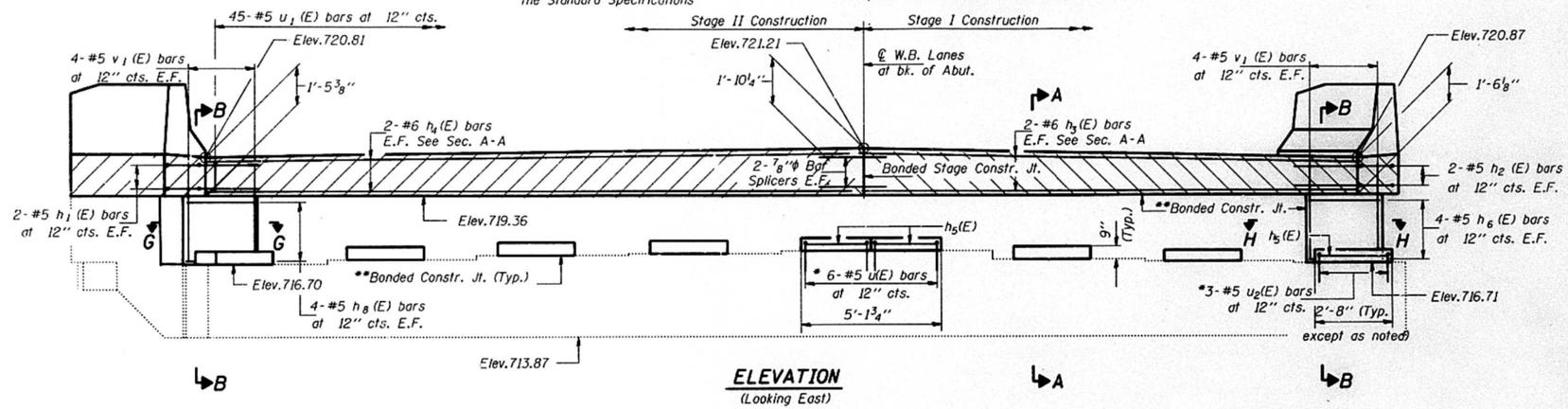

ELEVATION
(Looking East)

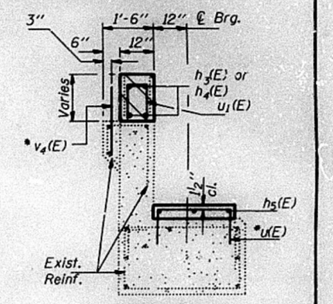

SECTION A-A

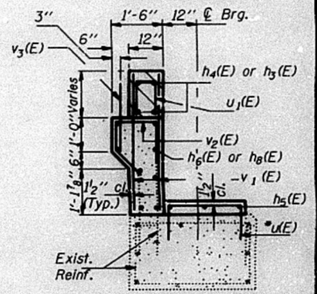

SECTION B-B

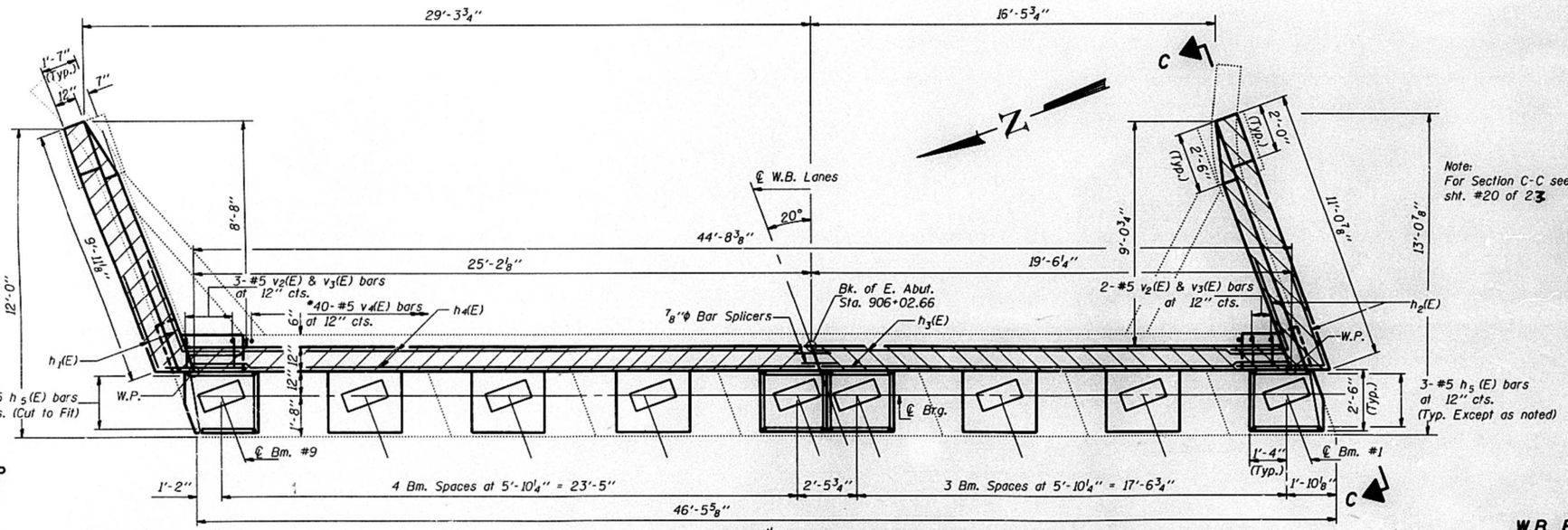

Note:
For Section C-C see sht. #20 of 23

TOP OF PEDESTAL ELEVATION

Beam #1	717.46
Beam #2	717.56
Beam #3	717.64
Beam #4	717.70
Beam #5	717.70
Beam #6	717.66
Beam #7	717.60
Beam #8	717.52
Beam #9	717.45

MIN. BAR LAP
#5 bars = 1'-8"
#6 bars = 2'-0"

E.F.= Each Face

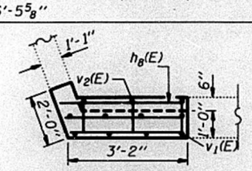

SECTION G-G

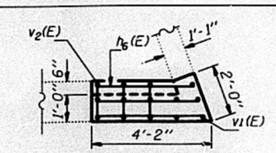

SECTION H-H

DESIGNED	Jeffrey P. Voitik	
CHECKED	Chris A. Sogaard	
DRAWN	SHANE SUMMER	
CHECKED	JMV	CAS

MARCH 30 1994
EXAMINED Raj D. Kapur — ENGINEER OF BRIDGE DESIGN
PASSED Ralph E. Anderson — ENGINEER OF BRIDGES AND STRUCTURES

FOR INFORMATION ONLY

W.B. EAST ABUTMENT DETAILS
INTERSTATE 74 OVER
MUD CREEK
F.A.I. ROUTE 74 - SEC. (90-15B)I-1
TAZEWELL COUNTY
STA. 905+20.00

MODEL: Default
FILE NAME: P:\2019\190388\WO6 I-74 Bridge PSEs\4 CADD - DWG\4-4 Struc\0900023-0024\0900023-0024-68F54-029 Existing Abutment Details.dgn

TWM INC. — ENGINEERING GEOSPATIAL SERVICES
WWW.TWM-INC.COM
IL DESIGN FIRM LICENSE NO: 184-001220

USER NAME = ckoltveit	DESIGNED - NP	REVISED -	
	CHECKED - ALN	REVISED -	
PLOT SCALE = 0:2.0000 ':" / in.	DRAWN - NP	REVISED -	
PLOT DATE = 12/1/2020	CHECKED - ALN	REVISED -	

STATE OF ILLINOIS
DEPARTMENT OF TRANSPORTATION

EXISTING ABUTMENT DETAILS
SN 090-0023 & 090-0024
SHEET 29 OF 33 SHEETS

F.A.I. RTE.	SECTION	COUNTY	TOTAL SHEETS	SHEET NO.
74	90-15[HB(1-4);VB;B]BP,BJR,BRR	TAZEWELL	192	140
		CONTRACT NO. 68F54		
	ILLINOIS	FED. AID PROJECT		

STATE OF ILLINOIS
DEPARTMENT OF TRANSPORTATION

ROUTE NO.	SECTION	COUNTY	TOTAL SHEETS	SHEET
FAI 74	(90-15B) I-1	TAZEWELL		125
FED. ROAD DIST. NO. 7		ILLINOIS	FED. AID PROJECT-	

SHEET NO. 19
23 SHEETS

* Epoxy grout $v_4(E)$ & $u_2(E)$ bars in $\frac{7}{8}''$ diameter X 9'' minimum drilled holes. The grout and the method of application shall be approved by the Department. (See Special Provisions).

** Bonded Construction Joint in accordance with Article 504.13(a)(2) of the Standard Specifications

Work this sheet with sheet 20 of 23.
Hatched area to be poured after Superstructure forms have been removed. Quantity of concrete included with Class X Concrete Superstructure on sht. 8 of 23.
Clean and Straighten existing reinforcement and incorporate into new construction.
All edges shall have standard $\frac{3}{4}''$ chamfer except as noted.
Space Reinforcement to miss anchor bolts.

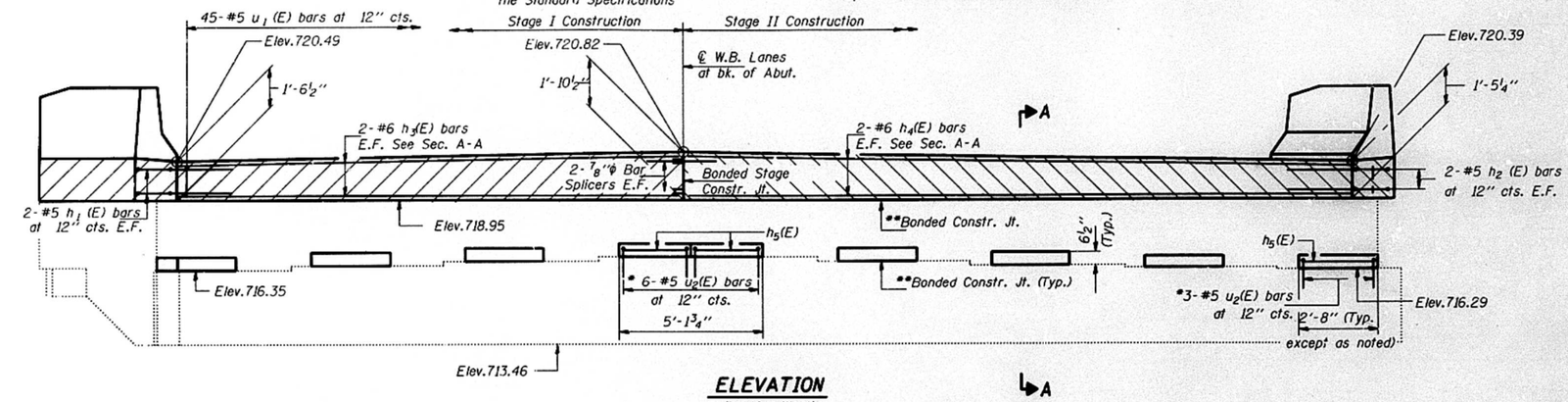

ELEVATION
(Looking West)

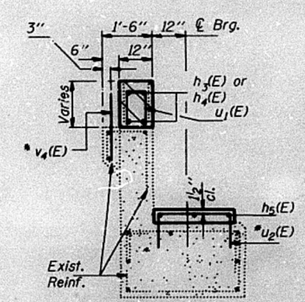

SECTION A-A

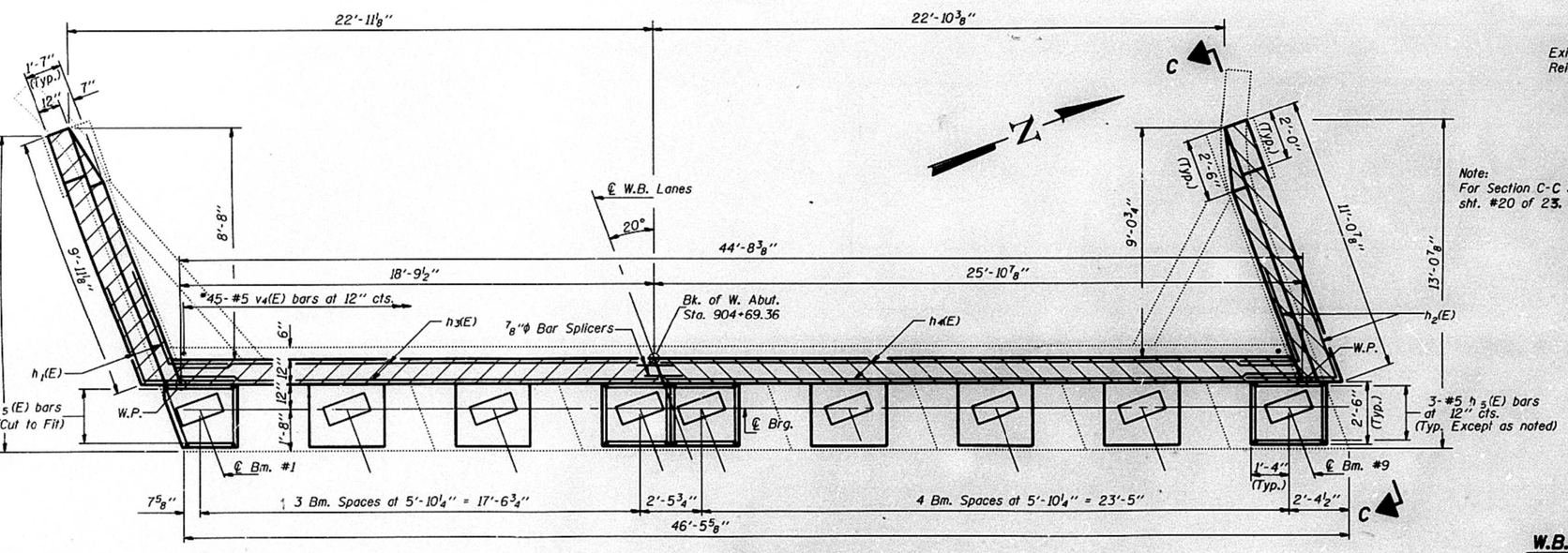

Note:
For Section C-C see sht. #20 of 23.

TOP OF PEDESTAL ELEVATION

Beam #1	716.89
Beam #2	716.98
Beam #3	717.06
Beam #4	717.11
Beam #5	717.11
Beam #6	717.06
Beam #7	716.99
Beam #8	716.90
Beam #9	716.83

PLAN

MIN. BAR LAP
#5 bars = 1'-8''
#6 bars = 2'-0''

E.F.= Each Face

DESIGNED	Jeffrey P. Voltz
CHECKED	Chris A. Sagaert
DRAWN	SHANE SUMMER
CHECKED	JPV CAS

March 30 1994
EXAMINED Greg J. Hasper — ENGINEER OF BRIDGE DESIGN
PASSED Ralph E. Anderson — ENGINEER OF BRIDGES AND STRUCTURES

FOR INFORMATION ONLY

W.B. WEST ABUTMENT DETAILS
INTERSTATE 74 OVER
MUD CREEK
F.A.I. ROUTE 74 - SEC. (90-15B)I-1
TAZEWELL COUNTY
STA. 905+20.00

MODEL: Default
FILE NAME: P:\2019\190388\W06 F-74 Bridge PSE\v4 CADD - DWG\4.4 Struc\09000023-0024\0900023-0024-68F54-930 Existing Abutment Details.dgn

TWM ENGINEERING GEOSPATIAL SERVICES
TWM, INC. WWW.TWM-INC.COM
IL DESIGN FIRM LICENSE NO: 184-001220

USER NAME = ckoltveit	DESIGNED - NP	REVISED -	
	CHECKED - ALN	REVISED -	
PLOT SCALE = 0:2.0000 ':" / in.	DRAWN - NP	REVISED -	
PLOT DATE = 12/1/2020	CHECKED - ALN	REVISED -	

STATE OF ILLINOIS
DEPARTMENT OF TRANSPORTATION

EXISTING ABUTMENT DETAILS
SN 090-0023 & 090-0024
SHEET 30 OF 33 SHEETS

F.A.I. RTE.	SECTION	COUNTY	TOTAL SHEETS	SHEET NO.
74	90-15[HB(1-4);VB;B]BP,BJR,BRR	TAZEWELL	192	141
		CONTRACT NO. 68F54		
		ILLINOIS	FED. AID PROJECT	

ROUTE NO.	SECTION	COUNTY	TOTAL SHEETS	SHEET NO.
F.A.I. 74	(90-15B) I-1	TAZEWELL		126
FED. ROAD DIST. NO. 7	ILLINOIS	FED. AID PROJECT-		

SHEET NO. 20
23 SHEETS

STATE OF ILLINOIS
DEPARTMENT OF TRANSPORTATION

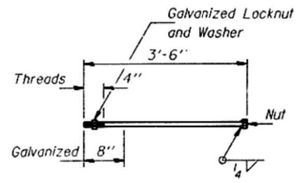

1"ϕ ANCHOR BOLT

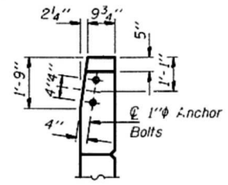

VIEW I-I

* Epoxy grout v(E) bars in 7/8" diameter X 9" minimum drilled holes. The grout and the method of application shall be approved by the Department. (See Special Provisions).

** Bonded Construction Joint in accordance with Article 504.13(a)X2) of the Standard Specifications

Work this sheet with sheets 16-19 of 23.
Clean and Straighten existing reinforcement and incorporate into new construction.
All edges shall have standard 3/4" chamfer except as noted.
Space Reinforcement to miss anchor bolts.

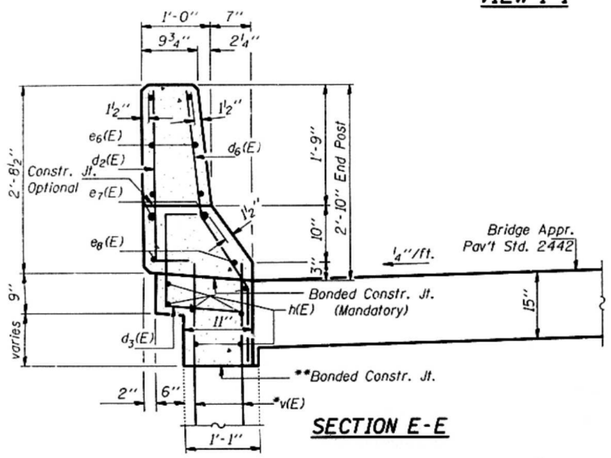

SECTION E-E

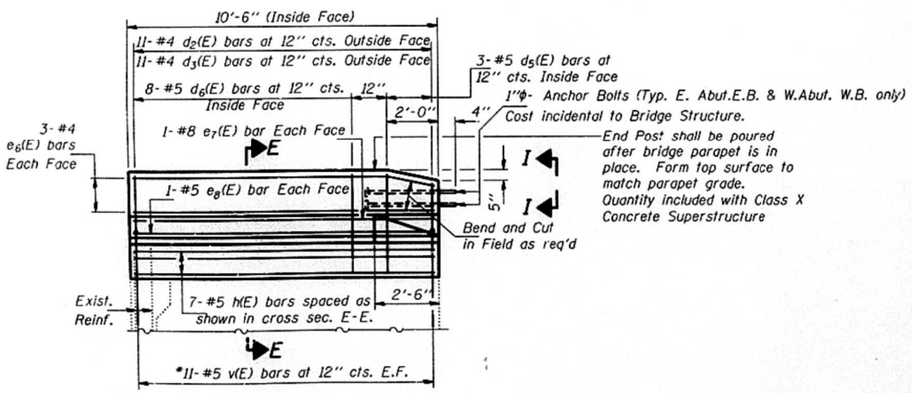

SECTION C-C

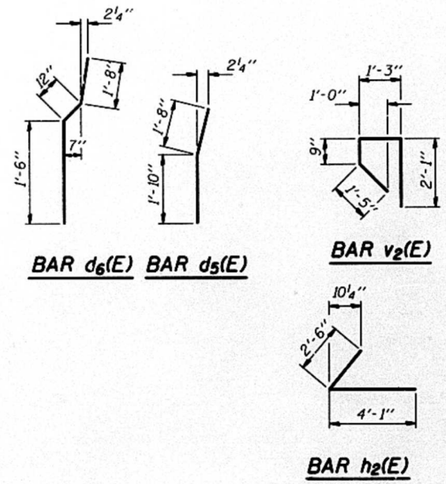

BAR d6(E) BAR d5(E) BAR v2(E) BAR h2(E)

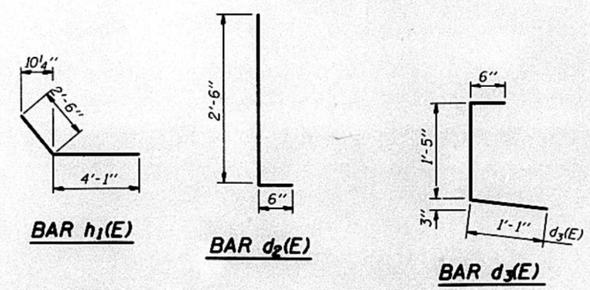

BAR h1(E) BAR d2(E) BAR d3(E)

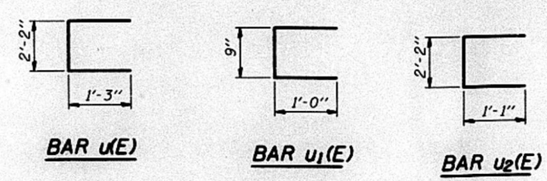

BAR u(E) BAR u1(E) BAR u2(E)

MIN. BAR LAP

#5 bars = 1'-8"
#6 bars = 2'-0"

E.F.= Each Face

FOUR ABUTMENTS BILL OF MATERIAL

Bar	East Bound E.Abut.	East Bound W.Abut.	West Bound E.Abut.	West Bound W.Abut.	Size	Length	Shape
$d_2(E)$	22	22	22	22	#4	3'-0"	
$d_3(E)$	22	22	22	22	#4	3'-0"	
$d_5(E)$	6	6	6	6	#5	3'-6"	
$d_6(E)$	16	16	16	16	#5	4'-2"	
$e_6(E)$	12	12	12	12	#4	10'-2"	
$e_7(E)$	4	4	4	4	#8	10'-2"	
$e_8(E)$	4	4	4	4	#5	10'-2"	
h(E)	14	14	14	14	#5	10'-2"	
$h_1(E)$	4	4	4	4	#5	6'-7"	
$h_2(E)$	4	4	4	4	#5	6'-7"	
$h_3(E)$	4	4	4	4	#6	18'-11"	
$h_4(E)$	4	4	4	4	#6	25'-3"	
$h_5(E)$	27	27	27	27	#5	2'-4"	
$h_6(E)$			8		#5	2'-4"	
$h_7(E)$	8				#5	3'-4"	
$h_8(E)$			8		#5	2'-11"	
u(E)	27		27		#5	4'-8"	
$u_1(E)$	45	45	45	45	#5	2'-9"	
$u_2(E)$		27		27	#5	4'-4"	
v(E)	44	44	44	44	#5	2'-6"	
$v_1(E)$	10		16		#5	3'-9"	
$v_2(E)$	3		5		#5	5'-6"	
$v_3(E)$	3		5		#5	2'-0"	
$v_4(E)$	42	45	40	45	#5	1'-9"	
Structure Excavation						Cu. Yd.	2.4
Class X Concrete						Cu. Yd.	7.1
Reinforcement Bars (Epoxy Coated)						Lbs.	5820
Bar Splicers						Each	16

Reinforcement bars designated (E) shall be epoxy coated.

DESIGNED JPV
CHECKED Chris A. Sagen
DRAWN SHANE SUMMER
CHECKED JPV CAS

MARCH 30 1994
EXAMINED Greg J. Kaspar ENGINEER OF BRIDGE DESIGN
PASSED Ralph E. Anderson ENGINEER OF BRIDGES AND STRUCTURES

FOR INFORMATION ONLY

ABUTMENT DETAILS
INTERSTATE 74 OVER
MUD CREEK
F.A.I. ROUTE 74 - SEC. (90-15B)I-1
TAZEWELL COUNTY
STA. 905+20.00

MODEL: Default
FILE NAME: P:\2019\190388\W06 I-74 Bridge PSEs\4 CADD - DWG\4.4 Struc\0900023-0024\0900023-0024-68F54-031-Existing Abutment Details.dgn

TWM ENGINEERING GEOSPATIAL SERVICES
TWM, INC. WWW.TWM-INC.COM
IL DESIGN FIRM LICENSE NO: 184-001220

USER NAME = ckoltveit	DESIGNED - NP	REVISED -
	CHECKED - ALN	REVISED -
PLOT SCALE = 0:2.0000 ':" / in.	DRAWN - NP	REVISED -
PLOT DATE = 12/1/2020	CHECKED - ALN	REVISED -

STATE OF ILLINOIS
DEPARTMENT OF TRANSPORTATION

EXISTING ABUTMENT DETAILS
SN 090-0023 & 090-0024
SHEET 31 OF 33 SHEETS

F.A.I. RTE.	SECTION	COUNTY	TOTAL SHEETS	SHEET NO.
74	90-15(HB(1-4);VB;B)BP,BJR,BRR	TAZEWELL	192	142
		CONTRACT NO. 68F54		
	ILLINOIS	FED. AID PROJECT		

STATE OF ILLINOIS
DEPARTMENT OF PUBLIC WORKS & BUILDINGS
DIVISION OF HIGHWAYS

FAI-74

ROUTE No.	SEC.	COUNTY	TOTAL SHEETS	SHEET NO.
F.A.I.-5	90-15B	TAZEWELL	19	10
FED. ROAD DIST. No. 7		ILLINOIS	PROJECT	

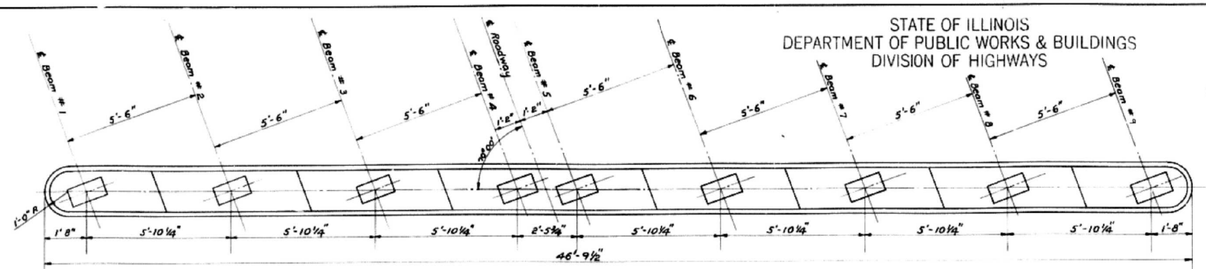

TOP PLAN

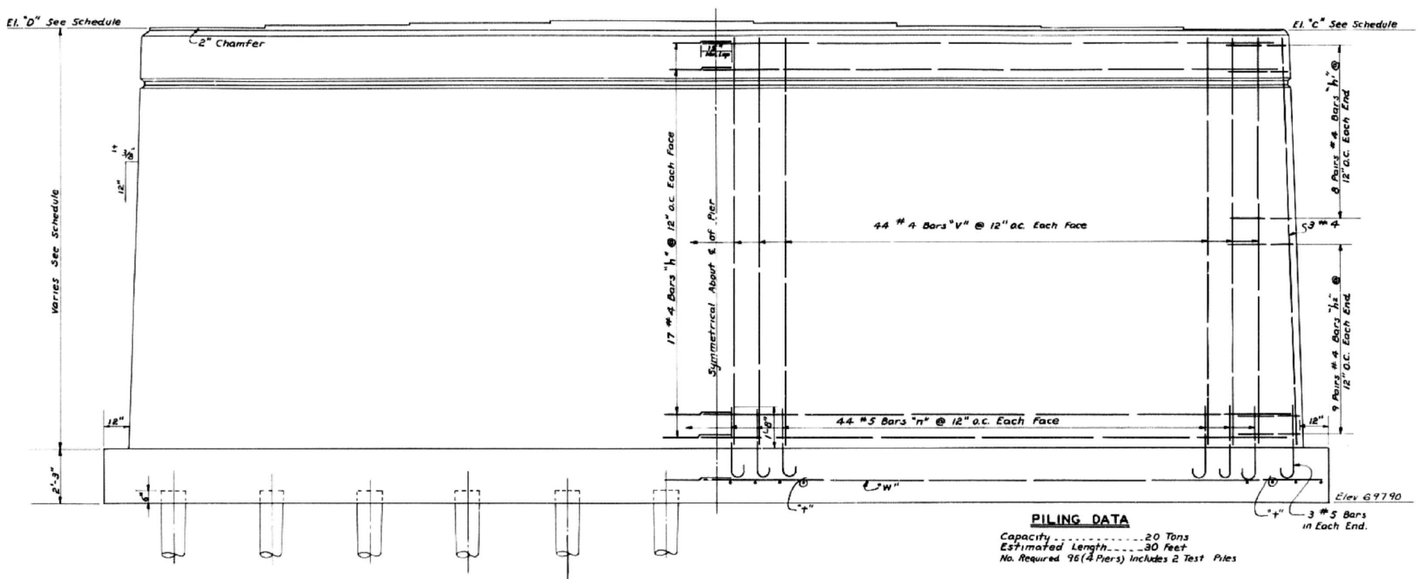

ELEVATION

PILING DATA

Capacity.....20 Tons
Estimated Length.....30 Feet
No. Required 96 (4 Piers) Includes 2 Test Piles

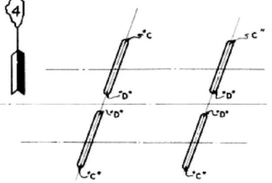

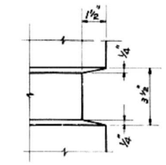

NOTCH DETAIL

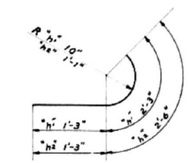

DETAIL "h" & "h²" BARS

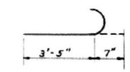

DETAIL "n" BAR

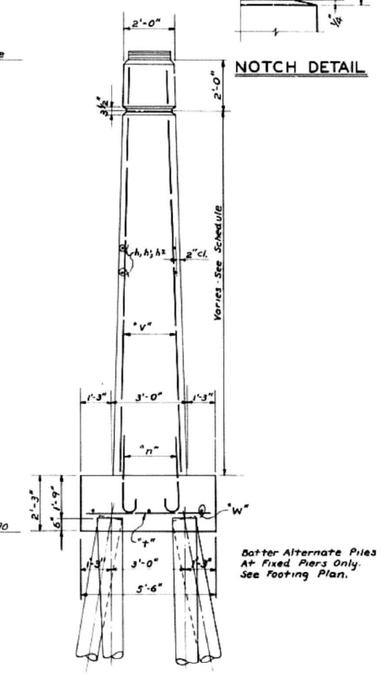

END VIEW

POINT	LOCATION	ELEV.
C	W. PIER RT. BR.	716.22
D	W. PIER RT. BR.	716.32
C	E. PIER RT. BR.	716.39
D	E. PIER RT. BR.	716.50
C	W. PIER LT. BR.	716.32
D	W. PIER LT. BR.	716.37
C	E. PIER LT. BR.	716.54
D	E. PIER LT. BR.	718.56

NOTE:
East Pier of Lt. Bridge Shown for Layout of other Piers See General Plan & Elevation

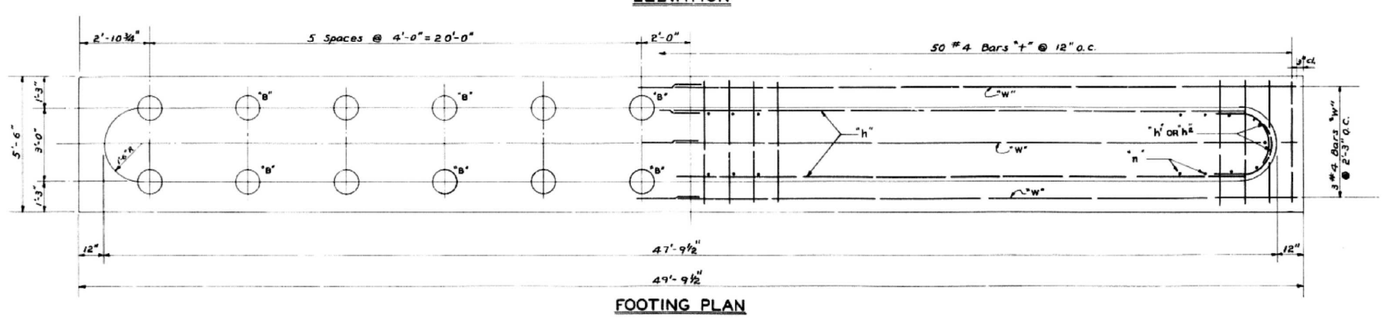

FOOTING PLAN

BILL OF MATERIAL - 4 PIERS

BAR	No.	SIZE	LENGTH	SHAPE
h	272	4	23'-0"	
W	128	4	3'-6"	
h²	144	4	3'-9"	
n	376	5	4'-0"	
t	200	4	5'-0"	
V	376	4	16'-3"	
W	24	4	25'-0"	
CLASS "A" CONCRETE			374.0	CU. YDS.
REINFORCEMENT BARS			11580	LBS.
FURNISH UNTREATED PILES			2820	LIN. FT.
DRIVE TIMBER PILES			2820	LIN. FT.
TEST PILES (TIMBER)			2	EA.

PIER DETAILS

F.A.I. ROUTE 5 - SECTION 90-15B

F.A.I. ROUTE 5 OVER MUD CREEK
STATION 905+20.00
TAZEWELL, COUNTY

WARREN AND VAN PRAAG, INC.
CONSULTING ENGINEERS-DECATUR, ILLINOIS

DESIGNED R. Karfman
CHECKED H.Y. Fukuda
DRAWN R. Cunningham
CHECKED H.Y. Fukuda

April 24 1958
EXAMINED M. Bonne
ENGINEER OF BRIDGES AND TRAFFIC STRUCTURES
PASSED
ENGINEER OF DESIGN
APPROVED
CHIEF HIGHWAY ENGINEER

FOR INFORMATION ONLY

MODEL: Default
FILE NAME: P:\2019\190388\WO6 I-74 Bridge PSEs\4 CADD - DWG\4-4 Struc\0900023-0024\0900023-0024-68F54-032_Existing Pier Details.dgn

TWM ENGINEERING GEOSPATIAL SERVICES
TWM, INC.
WWW.TWM-INC.COM
IL DESIGN FIRM LICENSE NO: 184-001220

USER NAME = ckoltveit	DESIGNED - NP	REVISED -
	CHECKED - ALN	REVISED -
PLOT SCALE = 0:2.0000 ':' / in.	DRAWN - NP	REVISED -
PLOT DATE = 12/1/2020	CHECKED - ALN	REVISED -

STATE OF ILLINOIS
DEPARTMENT OF TRANSPORTATION

EXISTING PIER DETAILS
SN 090-0023 & 090-0024
SHEET 32 OF 33 SHEETS

F.A.I. RTE.	SECTION	COUNTY	TOTAL SHEETS	SHEET NO.
74	90-15[HB(1-4);VB;B]BP,BJR,BRR	TAZEWELL	192	143
		CONTRACT NO. 68F54		
		ILLINOIS	FED. AID PROJECT	

ROUTE NO.	SECTION	COUNTY	TOTAL SHEETS	SHEET NO.
F.A.I. 74	(90-15B) I-1	TAZEWELL		127
FED. ROAD DIST. NO. 7	ILLINOIS	FED. AID PROJECT-		

SHEET NO. 21
23 SHEETS

STATE OF ILLINOIS
DEPARTMENT OF TRANSPORTATION

* Epoxy grout $u_3(E)$ bars in $\frac{7}{8}''$ diameter X 9'' minimum drilled holes. The grout and the method of application shall be approved by the Department. (See Special Provisions).

** Bonded Construction Joint in accordance with Article 504.13(a)(2) of the Standard Specifications

All edges shall have standard $\frac{3}{4}''$ chamfer except as noted.

Space Reinforcement to miss anchor bolts.

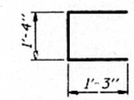

BAR $u_3(E)$

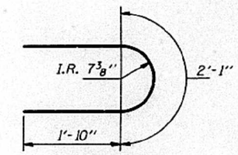

BAR $h_9(E)$

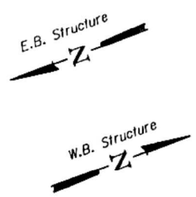

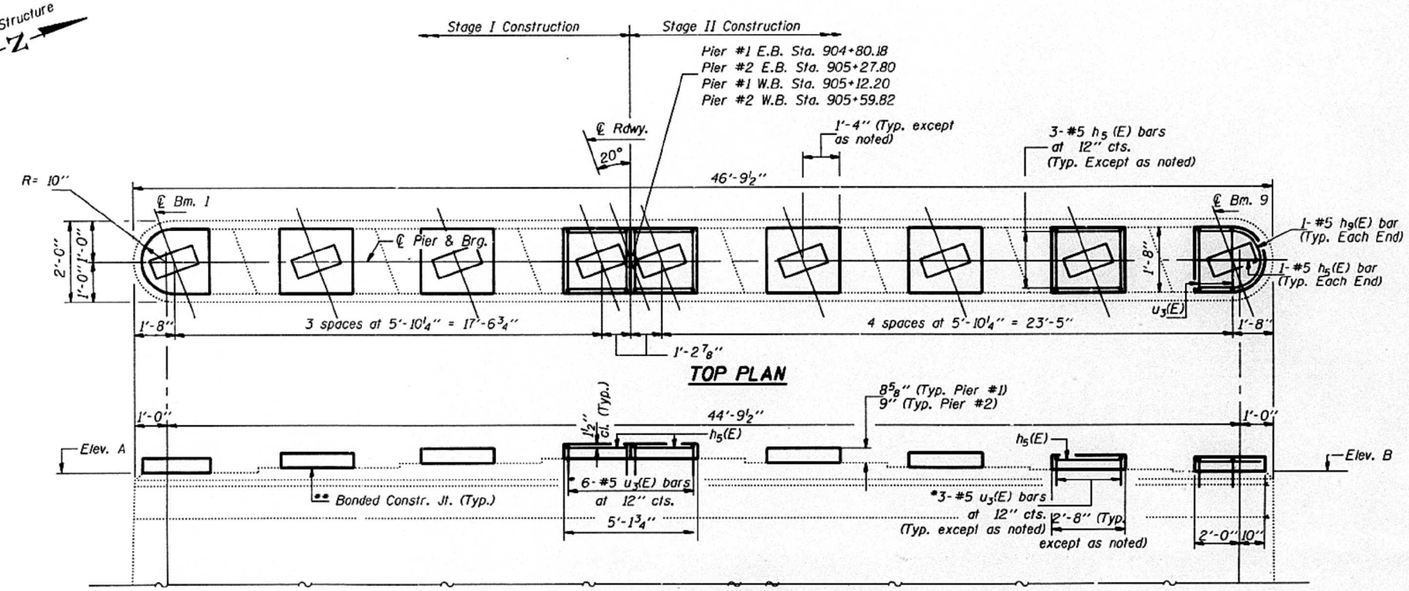

TOP PLAN

ELEVATION
(W.B. Structure - Looking West)
(E.B. Structure - Looking East)

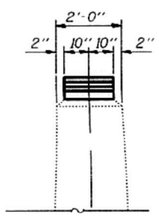

END VIEW

FOUR PIERS BILL OF MATERIAL

Bar	No.	Size	Length	Shape
$h_5(E)$	92	#5	2'-4''	
$h_9(E)$	8	#5	5'-9''	
$u_3(E)$	108	#5	3'-10''	
Class X Concrete			Cu. Yd.	4.3
Reinforcement Bars, Epoxy Coated			Lbs.	700

Reinforcement Bars designated (E) shall be epoxy coated.

TOP OF PEDESTAL ELEVATION

	East Bound		West Bound	
	Pier #1	Pier #2	Pier #1	Pier #2
Beam #1	717.04	717.25	717.09	717.32
Beam #2	717.13	717.34	717.18	717.42
Beam #3	717.20	717.44	717.25	717.49
Beam #4	717.24	717.45	717.31	717.55
Beam #5	717.24	717.45	717.31	717.55
Beam #6	717.19	717.39	717.27	717.51
Beam #7	717.12	717.32	717.20	717.45
Beam #8	717.02	717.22	717.12	717.36
Beam #9	716.94	717.14	717.04	717.29

ELEVATION "A"

E.B. Pier #1	716.32
E.B. Pier #2	716.50
W.B. Pier #1	716.37
W.B. Pier #2	716.56

ELEVATION "B"

E.B. Pier #1	716.22
E.B. Pier #2	716.39
W.B. Pier #1	716.32
W.B. Pier #2	716.54

FOR INFORMATION ONLY

DESIGNED	J P Vitte
CHECKED	Chris A. Sugaroy
DRAWN	SHANE SUMMER
CHECKED	JPV CAS

March 30 1994
EXAMINED Greg D. Harper ENGINEER OF BRIDGE DESIGN
PASSED Ralph E. Anderson ENGINEER OF BRIDGES AND STRUCTURES

PB-1 2-26-93

PIER DETAILS
INTERSTATE 74 OVER MUD CREEK
F.A.I. ROUTE 74 - SEC. (90-15B)I-1
TAZEWELL COUNTY
STA. 905+20.00

MODEL: Default
FILE NAME: P:\2019\190388\W06-F-74 Bridge PSE\04 CADD - DWG\4.4 Struc\0900023-0024\0900023-0024-68F54-033 Existing Pier Details.dgn

TWM ENGINEERING GEOSPATIAL SERVICES
TWM, INC. WWW.TWM-INC.COM
IL DESIGN FIRM LICENSE NO: 184-001220

USER NAME = ckoltveit	DESIGNED - NP	REVISED -	
	CHECKED - ALN	REVISED -	
PLOT SCALE = 0:2.0000 ':' / in.	DRAWN - NP	REVISED -	
PLOT DATE = 12/1/2020	CHECKED - ALN	REVISED -	

STATE OF ILLINOIS
DEPARTMENT OF TRANSPORTATION

EXISTING PIER DETAILS
SN 090-0023 & 090-0024

SHEET 33 OF 33 SHEETS

F.A.I. RTE.	SECTION	COUNTY	TOTAL SHEETS	SHEET NO.
74	90-15[HB(1-4);VB:B]BP,BJR,BRR	TAZEWELL	192	144
		CONTRACT NO. 68F54		
		ILLINOIS FED. AID PROJECT		

GENERAL NOTES

All structural steel shall conform to AASHTO Classification M-270 Gr. 36, unless otherwise noted.

Plan dimensions and details relative to existing plans are subject to nominal construction variations. The Contractor shall field verify existing dimensions and details affecting new construction and make necessary approved adjustments prior to construction or ordering of materials. Such variations shall not be cause for additional compensation for a change in scope of the work, however, the Contractor will be paid for the quantity actually furnished at the unit price bid for the work.

Reinforcement bars designated (E) shall be epoxy coated.

Prior to pouring the new concrete deck, all heavy or loose rust, loose mill scale, and other loose or potentially detrimental foreign material shall be removed from the surfaces in contact with concrete. Tightly adhered paint may remain unless otherwise noted. Removal shall be accomplished by methods that will not damage the steel and the cost will be included in the pay item covering removal of the existing concrete.

Existing reinforcement bars extending into the removal area shall be cleaned, straightened and incorporated into the new construction. Any reinforcement bars that are damaged during concrete removal shall be replaced with an approved bar splicer or anchorage system. Cost included with Concrete Removal.

Joint openings shall be adjusted according to Article 520.04 of the Std. Specs. when the deck is poured at an ambient temperature other than 50° F.

The cost of epoxy grouting threaded rods shall be included with Reinforcement Bars, Epoxy Coated.

The deck surface shall have its final finish tined according to Article 420.09(e)(1) of the Standard Specifications. Cost included with Concrete Superstructure.

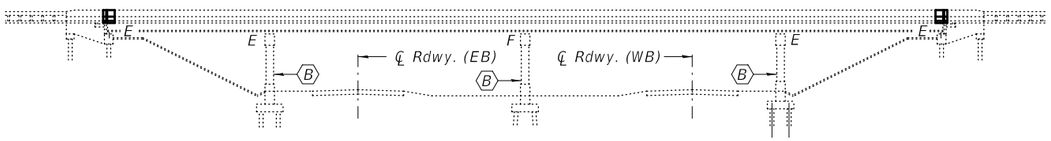

ELEVATION

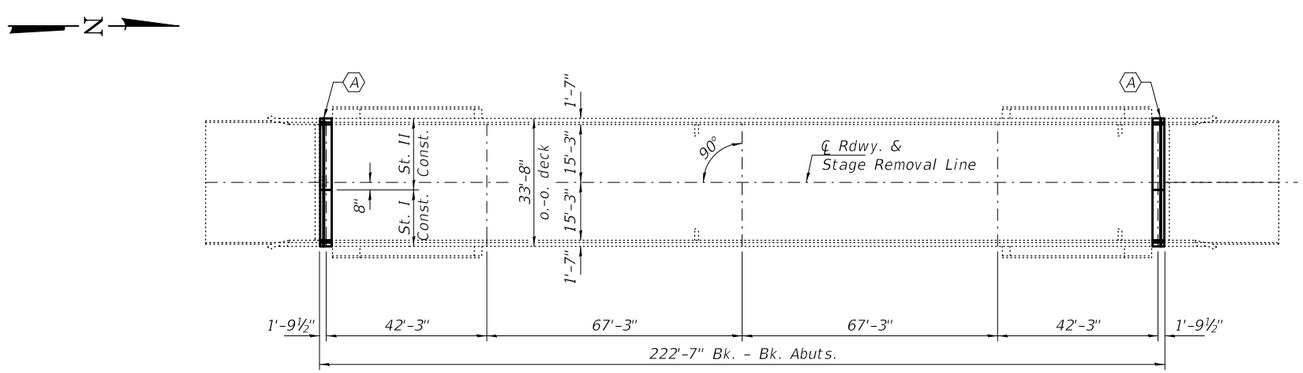

PLAN

(A) - Remove & Replace existing Expansion Joint with a Preformed Joint Strip Seal.

(B) - Install new crashwall extensions to the piers.

TOTAL BILL OF MATERIAL

	ITEM	UNIT	QUANTITY
	Concrete Removal	Cu. Yd.	6.7
	Concrete Structures	Cu. Yd.	11.9
	Concrete Superstructure	Cu. Yd.	6.7
	Reinforcement Bars, Epoxy Coated	Pound	2500
	Preformed Joint Strip Seal	Foot	65
*	Protective Coat	Sq. Yd.	77
	Bar Splicers	Each	20

* Apply to new concrete only.

EXPIRES 11-30-2022

DESIGNED - Victor H. Veliz	EXAMINED	DATE - DECEMBER 03, 2020	STATE OF ILLINOIS DEPARTMENT OF TRANSPORTATION
CHECKED - Adrian T. Halloway	ENGINEER OF STRUCTURAL SERVICES		
DRAWN - daburdell	PASSED	REVISED -	
CHECKED - VHV ATH	ENGINEER OF BRIDGES AND STRUCTURES	REVISED -	

GENERAL PLAN AND ELEVATION
FAS 2467 (WASHINGTON RD / CH 3) OVER I-74
SN 090-0075
SHEET NO. 1 OF 7 SHEETS

F.A.S. RTE.	SECTION	COUNTY	TOTAL SHEETS	SHEET NO.
2467	90-15[HB(1-4),VB,B] BP, BJR,BRR	TAZEWELL	192	145
		CONTRACT NO. 68F54		
		ILLINOIS FED. AID PROJECT		

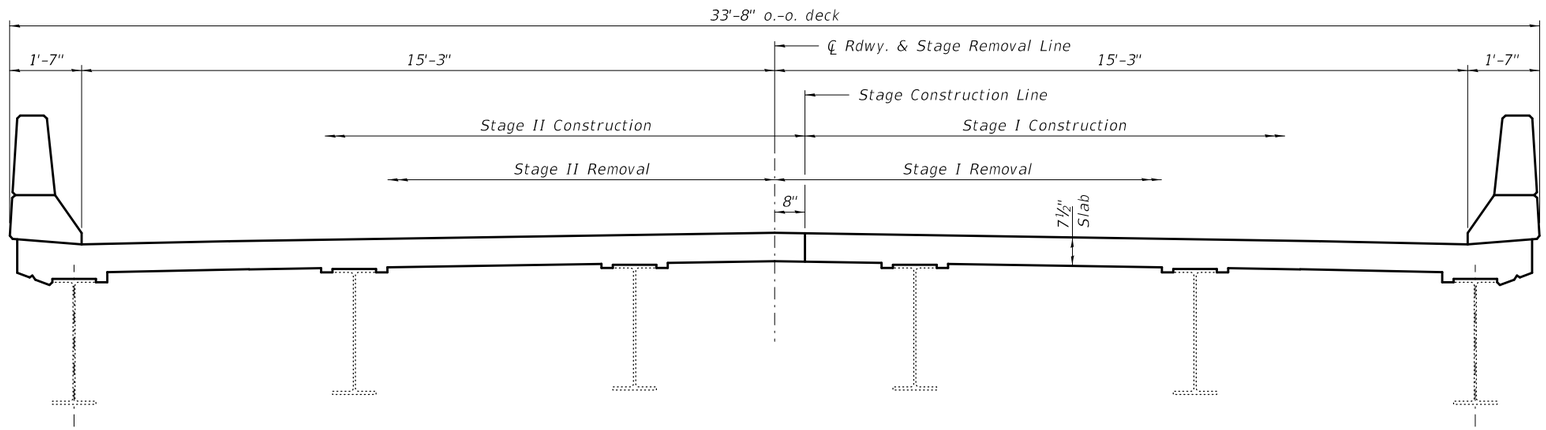

CROSS SECTION AT ABUTMENTS
(Looking North)

DESIGNED - VHV	EXAMINED	ENGINEER OF STRUCTURAL SERVICES	DATE - DECEMBER 03, 2020	STATE OF ILLINOIS DEPARTMENT OF TRANSPORTATION	STAGE CONSTRUCTION DETAILS SN 090-0075	F.A.S. RTE.	SECTION	COUNTY	TOTAL SHEETS	SHEET NO.
CHECKED - ATH						2467	90-15[HB(1-4),VB,B] BP, BJR,BRR	TAZEWELL	192	146
DRAWN - daburdell	PASSED	ENGINEER OF BRIDGES AND STRUCTURES	REVISED -					CONTRACT NO. 68F54		
CHECKED - VHV ATH			REVISED -		SHEET NO. 2 OF 7 SHEETS		ILLINOIS	FED. AID PROJECT		

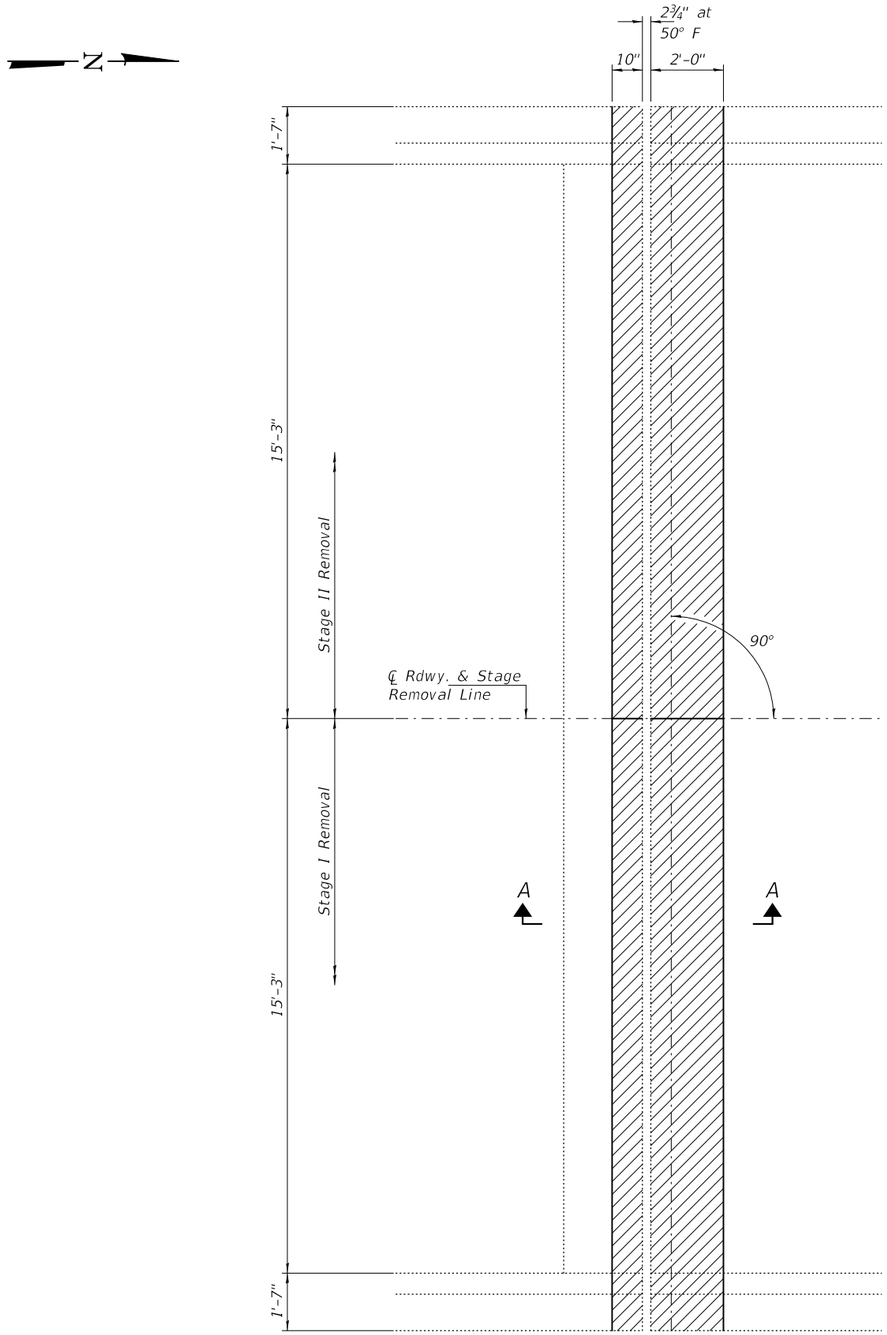

CONCRETE REMOVAL

(South Abut. shown, North Abut. similar)

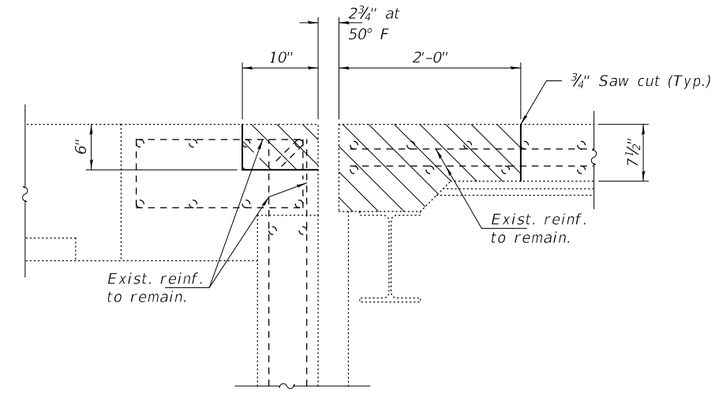

SECTION A-A

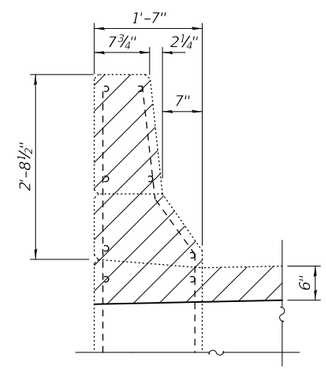

SECTION THRU APPROACH PARAPET

(All existing reinforcement is to remain.)

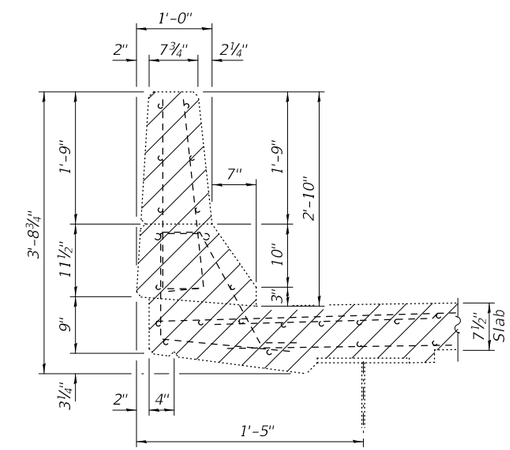

SECTION THRU BRIDGE PARAPET

Note:
Hatched areas indicate Concrete Removal.
See sheet 4 of - for Bill of Material.

DESIGNED - VHV	EXAMINED	ENGINEER OF STRUCTURAL SERVICES	DATE - DECEMBER 03, 2020	STATE OF ILLINOIS DEPARTMENT OF TRANSPORTATION	JOINT REMOVAL DETAILS - ABUTMENTS SN 090-0075	F.A.S. RTE.	SECTION	COUNTY	TOTAL SHEETS	SHEET NO.
CHECKED - ATH						2467	90-15[HB(1-4),VB,B] BP, BJR,BRR	TAZEWELL	192	147
DRAWN - daburdell	PASSED	ENGINEER OF BRIDGES AND STRUCTURES	REVISED -		SHEET NO. 3 OF 7 SHEETS			CONTRACT NO. 68F54		
CHECKED - VHV ATH			REVISED -				ILLINOIS	FED. AID PROJECT		

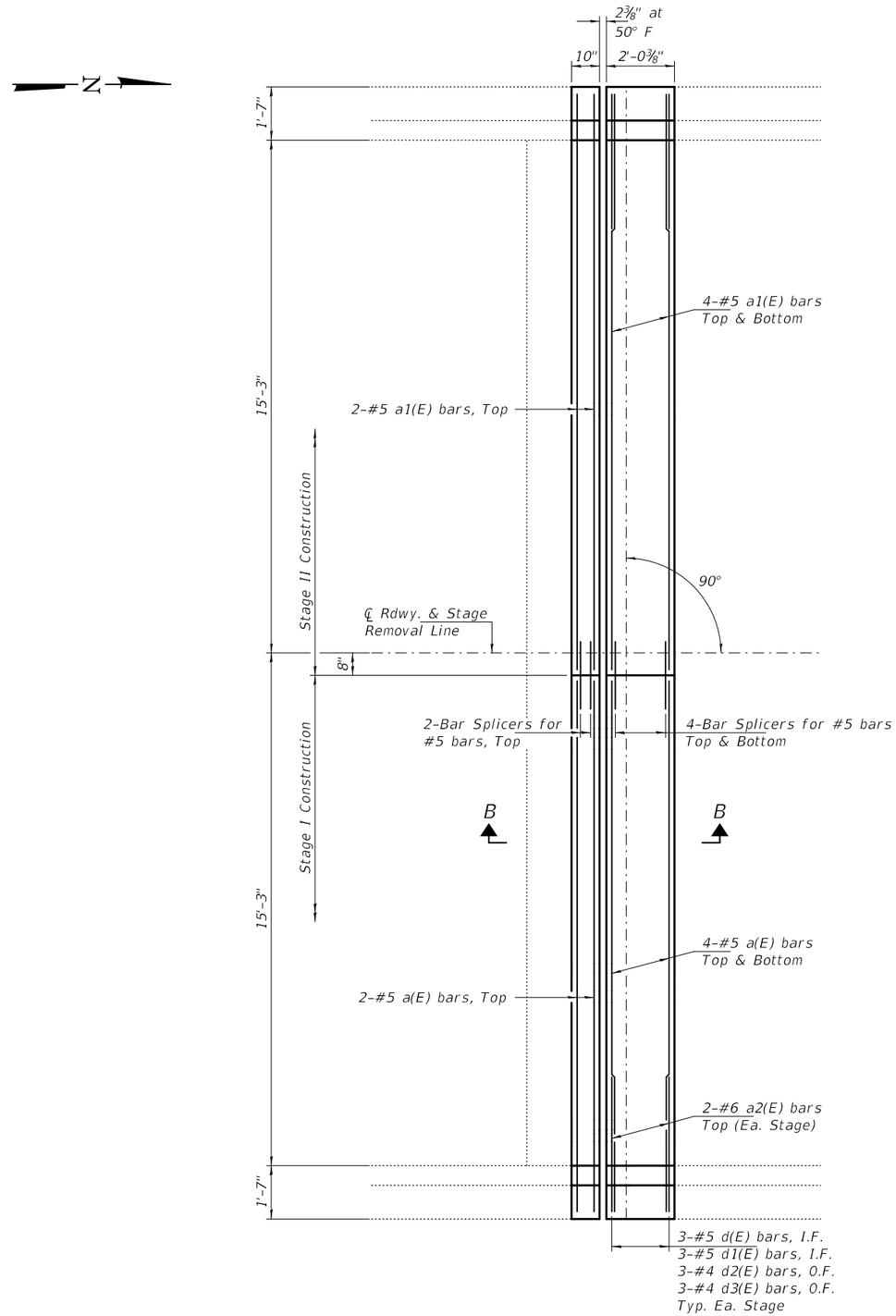

CONCRETE REPLACEMENT

(South Abut. shown, North Abut. similar)

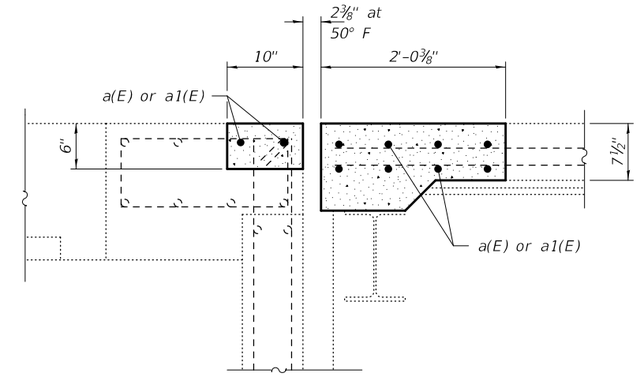

SECTION B-B

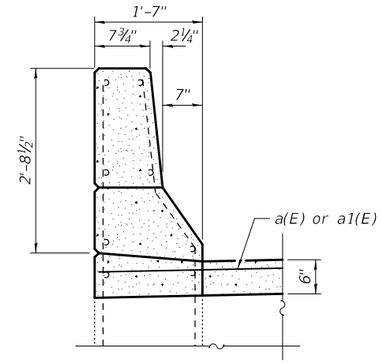

SECTION THRU APPROACH PARAPET

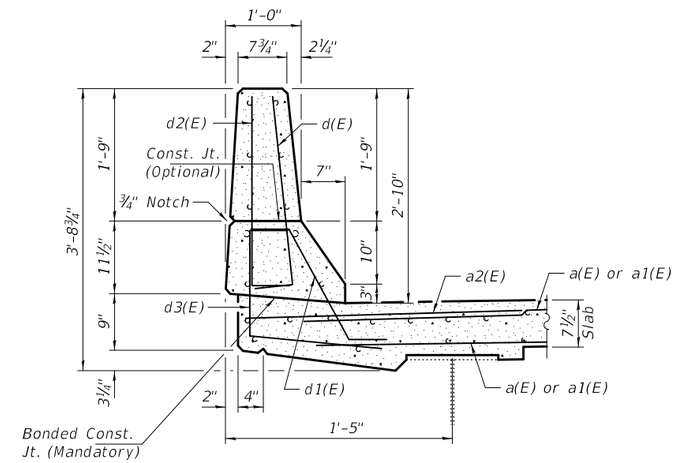

SECTION THRU BRIDGE PARAPET

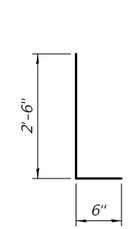

BARS d(E) & d2(E)

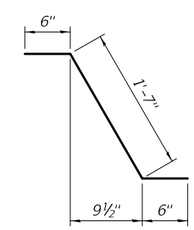

BAR d1(E)

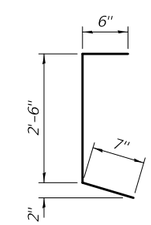

BAR d3(E)

BILL OF MATERIAL - 2 ABUTS.

Bar	No.	Size	Length	Shape
a(E)	20	#5	15'-2"	
a1(E)	20	#5	16'-6"	
a2(E)	8	#6	4'-0"	
d(E)	12	#5	3'-0"	
d1(E)	12	#5	2'-7"	
d2(E)	12	#4	3'-0"	
d3(E)	12	#4	2'-6"	
Concrete Removal			Cu. Yd.	6.7
Concrete Superstructure			Cu. Yd.	6.7
Reinforcement Bars, Epoxy Coated			Pound	830
Bar Splicers			Each	20
* Protective Coat			Sq. Yd.	24

* Apply to new concrete only.

DESIGNED - VHV	EXAMINED	ENGINEER OF STRUCTURAL SERVICES	DATE - DECEMBER 03, 2020
CHECKED - ATH			
DRAWN - daburdell	PASSED	ENGINEER OF BRIDGES AND STRUCTURES	REVISED -
CHECKED - VHV ATH			REVISED -

STATE OF ILLINOIS
DEPARTMENT OF TRANSPORTATION

JOINT REPLACEMENT DETAILS - ABUTMENTS
SN 090-0075

SHEET NO. 4 OF 7 SHEETS

F.A.S. RTE.	SECTION	COUNTY	TOTAL SHEETS	SHEET NO.
2467	90-15[HB(1-4),VB,B] BP, BJR,BRR	TAZEWELL	192	148
		CONTRACT NO. 68F54		
		ILLINOIS	FED. AID PROJECT	

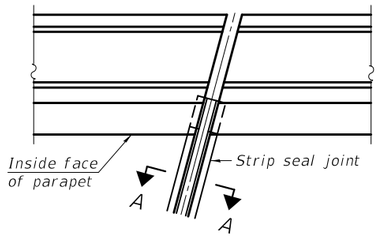

FOR SKEWS ≤ 30°

PLAN AT PARAPET

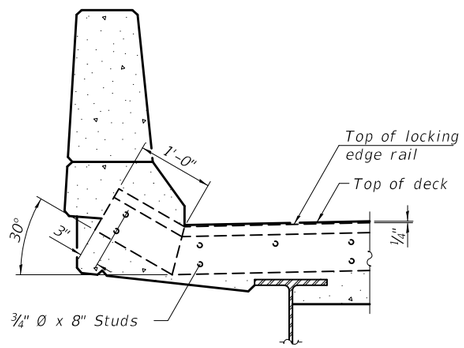

ELEVATION AT PARAPET

(Skews ≤ 30°)

Notes:

The strip seal shall be made continuous and shall have a minimum thickness of ¼". The configuration of the strip seal shall match the configuration of the locking edge rails. Open or "webbed" strip seal gland configurations are not permitted. The gland shall be sized for a maximum rated movement of 4 inches.

The locking edge rails depicted are configured for typical applications and are conceptual only. The actual configuration of the locking edge rails and matching strip seal may vary from manufacturer to manufacturer provided they fit the application and meet the minimum anchorage shown. Flanged edge rails, however, will not be allowed. Locking edge rails may exceed the 4½" maximum depth provided the anchorage system is revised according to the manufacturer's recommendation.

The manufacturer's recommended installation methods shall be followed.

All steel components shall be galvanized after fabrication according to Article 520.03 of the Standard Specifications.

The Maximum space between locking edge rail segments shall be 3/16" and sealed with a suitable sealant; however, any rail joint within 10' measured perpendicular to the face of the curb or parapet shall be welded as shown in the locking edge rail splice detail.

The concrete opening below the strip seal will vary based on the locking edge rail chosen by the Contractor. Deck and parapet lengths shown elsewhere in the plans are dimensioned to the concrete opening, not the joint opening, and are based on the rolled locking edge rail. If the Contractor elects to use a different locking edge rail, dimensional adjustments may be required. One exception to this would be the strip seal joint at the end of the precast bridge approach slab. For these cases the pavement connector length shall be adjusted, not the length of the bridge approach slab.

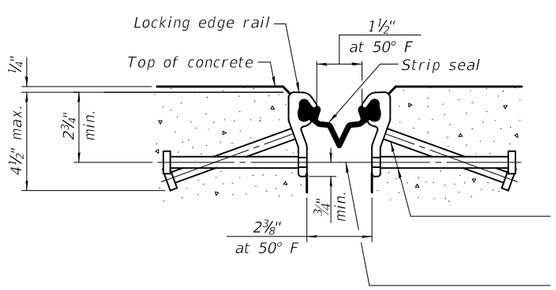

SHOWING ROLLED RAIL JOINT

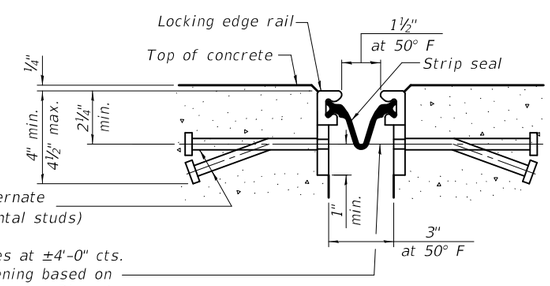

SHOWING WELDED RAIL JOINT

* ⅝" Ø x 6" studs @ 6" cts. (alternate angled/bent studs with horizontal studs)

⅜" ϕ threaded rods in 7/16" ϕ holes at ±4'-0" cts. for holding the proper joint opening based on the temperature during the deck pour. Place to miss studs. All rods shall be burned, or sawed off flush with the plates after concrete is set.

SECTION A-A

* Granular or solid flux filled headed studs conforming to Article 1006.32 of the Std. Specs., automatically end welded.

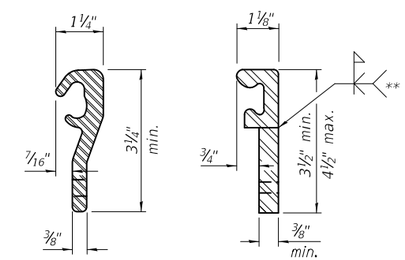

ROLLED (EXTRUDED) RAIL

WELDED RAIL

LOCKING EDGE RAILS

** Back gouge not required if complete joint penetration is verified by mock-up.

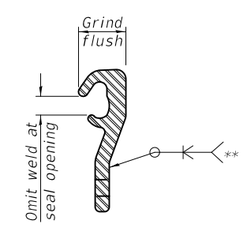

LOCKING EDGE RAIL SPLICE

The inside of the locking edge rail groove shall be free of weld residue. Rolled rail shown, welded rail similar.

BILL OF MATERIAL

Item	Unit	Total
Preformed Joint Strip Seal	Foot	65

DESIGNED - VHV	EXAMINED	DATE - DECEMBER 03, 2020	STATE OF ILLINOIS DEPARTMENT OF TRANSPORTATION
CHECKED - ATH	ENGINEER OF STRUCTURAL SERVICES		
DRAWN - daburdell	PASSED	REVISED -	
CHECKED - VHV ATH	ENGINEER OF BRIDGES AND STRUCTURES	REVISED -	

PREFORMED JOINT STRIP SEAL
SN 090-0075

SHEET NO. 5 OF 7 SHEETS

F.A.S. RTE.	SECTION	COUNTY	TOTAL SHEETS	SHEET NO.
2467	90-15[HB(1-4),VB,B] BP, BJR,BRR	TAZEWELL	192	149
		CONTRACT NO. 68F54		
		ILLINOIS FED. AID PROJECT		

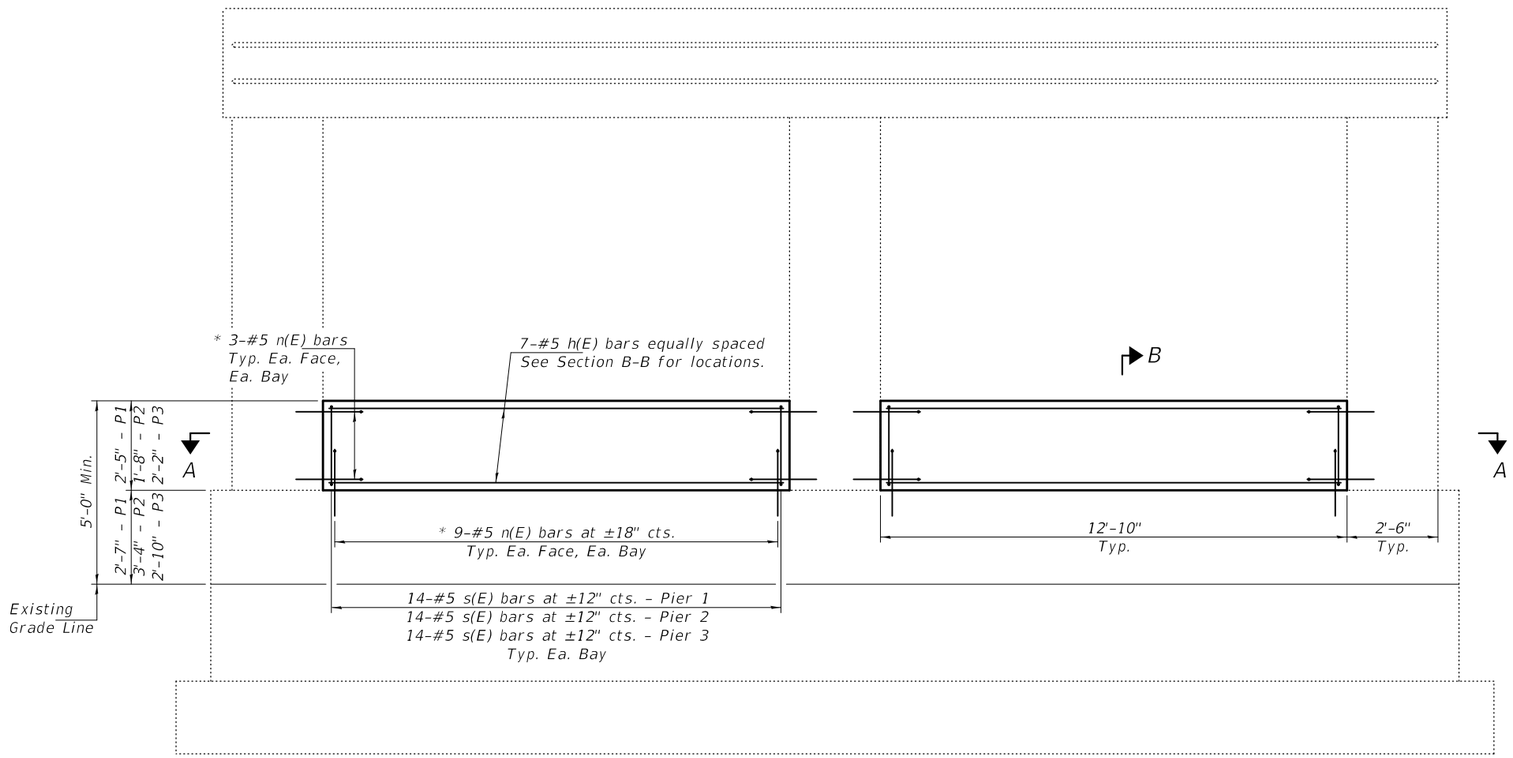

ELEVATION
(Looking North)

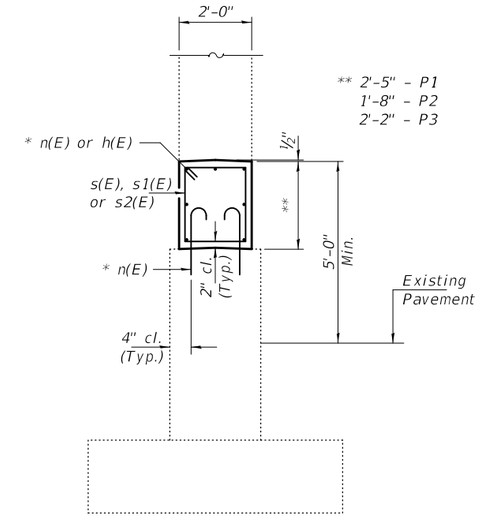

SECTION B-B

* Epoxy grout n(E) bars in 9" min. holes according to Article 584 of the Standard Specifications.

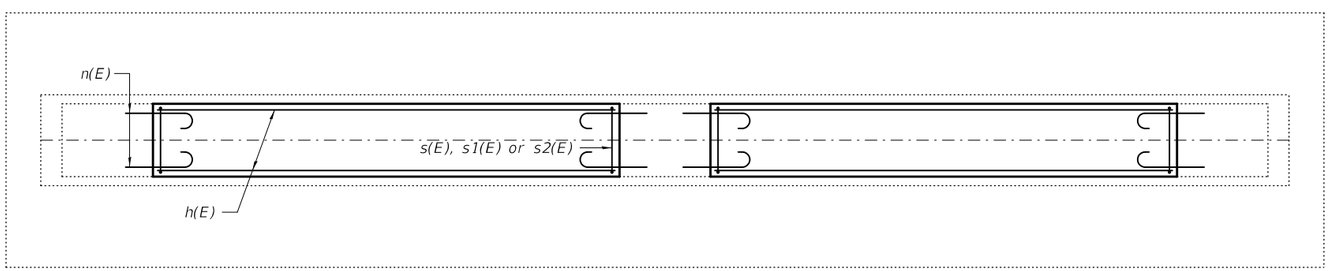

SECTION A-A

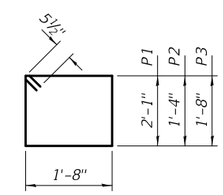

BARS s(E), s1(E) & s2(E)

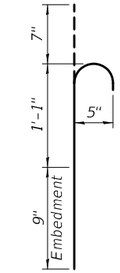

BAR n(E)

BILL OF MATERIAL - ALL PIERS

Bar	No.	Size	Length	Shape
h(E)	42	#5	12'-6"	
n(E)	180	#5	2'-5"	
s(E)	28	#5	8'-5"	
s1(E)	28	#5	6'-11"	
s2(E)	28	#5	7'-7"	
Concrete Structures			Cu. Yd.	11.9
** Protective Coat			Sq. Yd.	53
Reinforcement Bars, Epoxy Coated			Pound	1670

** Apply to new concrete only.

DESIGNED - VHV	EXAMINED	DATE - DECEMBER 03, 2020	STATE OF ILLINOIS DEPARTMENT OF TRANSPORTATION
CHECKED - ATH	ENGINEER OF STRUCTURAL SERVICES		
DRAWN - daburdell	PASSED	REVISED -	
CHECKED - VHV ATH	ENGINEER OF BRIDGES AND STRUCTURES	REVISED -	

PIER CRASHWALL EXTENSION - ALL PIERS
SN 090-0075
SHEET NO. 6 OF 7 SHEETS

F.A.S. RTE.	SECTION	COUNTY	TOTAL SHEETS	SHEET NO.
2467	90-15[HB(1-4),VB,B] BP, BJR,BRR	TAZEWELL	192	150
		CONTRACT NO. 68F54		
		ILLINOIS	FED. AID PROJECT	

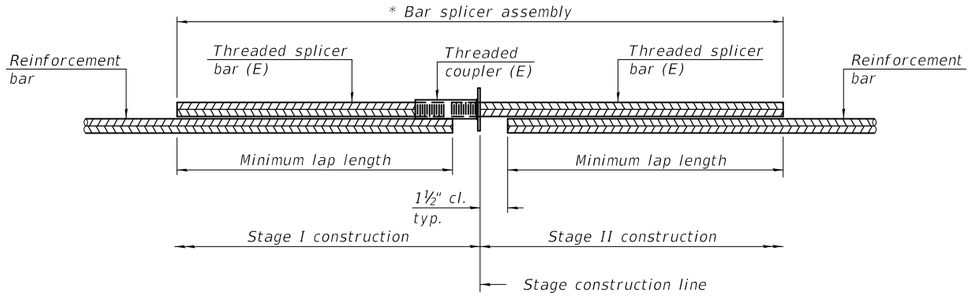

STANDARD BAR SPLICER ASSEMBLY PLAN

(All components shall be provided from one supplier)

Threaded splicer bar length = min. lap length + 1½" + thread length

* Epoxy not required on Bar Splicer Assembly components used in conjunction with black bars.

Location	Bar size	No. assemblies required	Minimum lap length
S. Abut. - Appr.	#5	2	3'-6"
S. Abut. - Deck	#5	8	3'-6"
N. Abut. - Appr.	#5	2	3'-6"
N. Abut. - Deck	#5	8	3'-6"

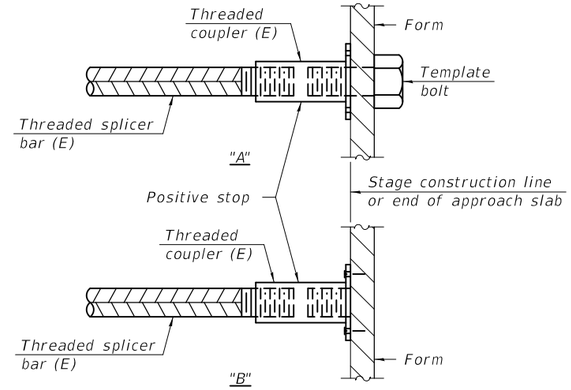

INSTALLATION AND SETTING METHODS

"A" : Set bar splicer assembly by means of a template bolt.
"B" : Set bar splicer assembly by nailing to wood forms or cementing to steel forms.
(E) : Indicates epoxy coating.

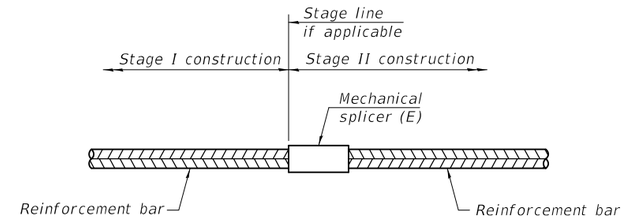

STANDARD MECHANICAL SPLICER

Location	Bar size	No. assemblies required

Notes:
Splicer bars shall be deformed with threaded ends and have a minimum 60 ksi yield strength.
All reinforcement shall be lapped and tied to the splicer bars.
Bar splicer assemblies shall be epoxy coated according to the requirements for reinforcement bars. See Section 508 of the Standard Specifications.
See approved list of bar splicer assemblies and mechanical splicers for alternatives.

BSD-1 1-1-2020

DESIGNED - VHV	EXAMINED	ENGINEER OF STRUCTURAL SERVICES	DATE - DECEMBER 03, 2020
CHECKED - ATH			
DRAWN - daburdell	PASSED	ENGINEER OF BRIDGES AND STRUCTURES	REVISED -
CHECKED - VHV ATH			REVISED -

STATE OF ILLINOIS
DEPARTMENT OF TRANSPORTATION

BAR SPLICER ASSEMBLY AND MECHANICAL SPLICER DETAILS
SN 090-0075

SHEET NO. 7 OF 7 SHEETS

F.A.S. RTE.	SECTION	COUNTY	TOTAL SHEETS	SHEET NO.
2467	90-15[HB(1-4),VB,B] BP, BJR,BRR	TAZEWELL	192	150A
		CONTRACT NO. 68F54		
		ILLINOIS	FED. AID PROJECT	

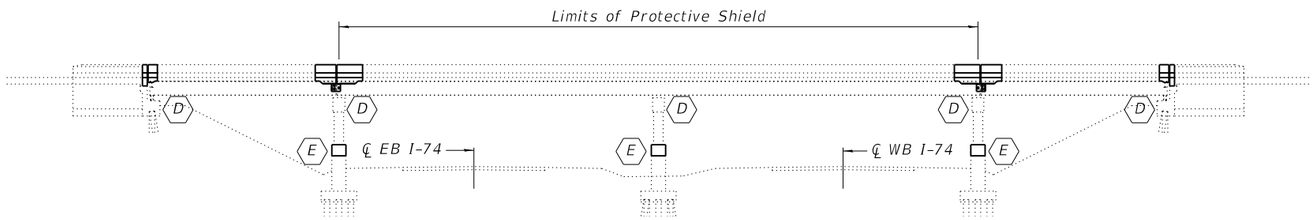

ELEVATION

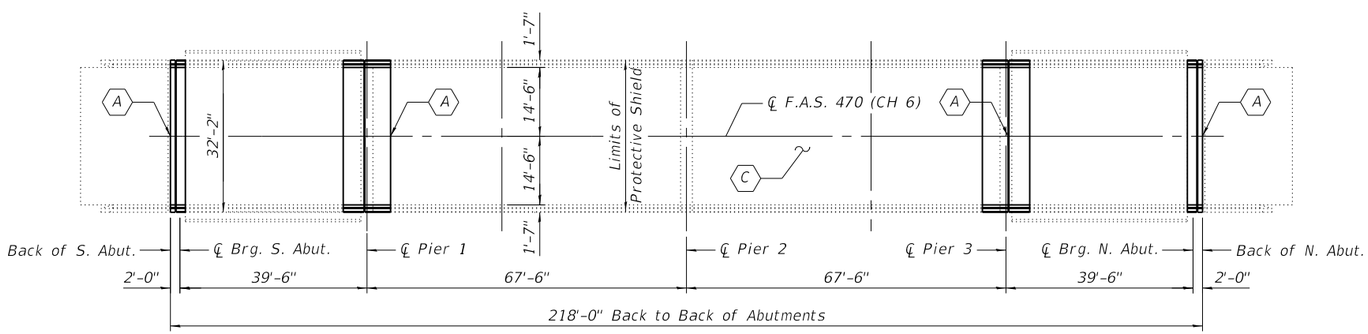

PLAN

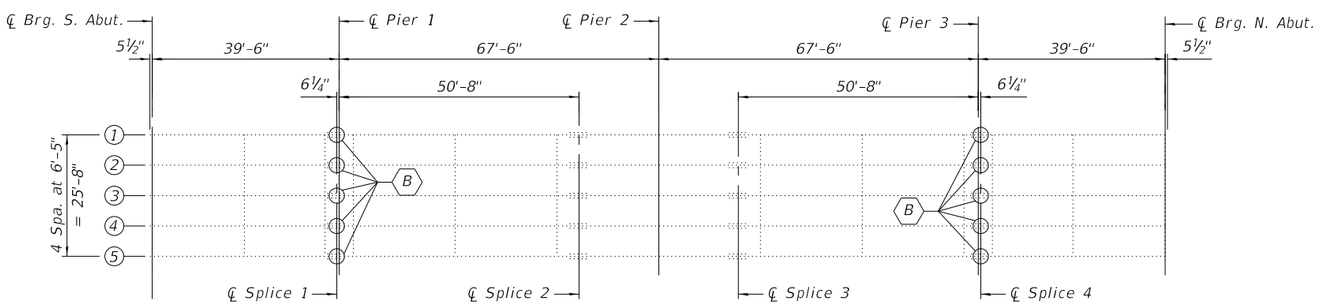

FRAMING PLAN

- (A) - Remove and replace expansion joints at Abutments, Pier 1, and Pier 3
- (B) - Structural Steel Repair
- (C) - Bridge Deck Repair
- (D) - Concrete repair of abutments or piers
- (E) - Crash Wall Extension

GENERAL NOTES

Plan dimensions and details relative to existing plans are subject to nominal construction variations. The Contractor shall field verify existing dimensions and details affecting new construction and make necessary approved adjustments prior to construction or ordering of materials. Such variations shall not be cause for additional compensation for a change in scope of work, however, the Contractor will be paid for the quantity actually furnished at the unit price bid for the work.

Reinforcement bars designated (E) shall be epoxy coated.

Prior to pouring new concrete, all heavy or loose rust, loose mill scale, and other loose or potentially detrimental foreign material shall be removed from the surfaces in contact with concrete. Tightly adhered paint may remain unless otherwise noted. Removal shall be accomplished by methods that will not damage the steel and the cost will be included in the pay item covering removal of existing concrete.

Existing reinforcement bars extending into the removal area shall be cleaned, straightened, and incorporated into the new construction. Any reinforcement bars that are damaged during concrete removal shall be replaced with an approved bar splicer or anchorage system. Cost included with Concrete Removal.

Joint openings shall be adjusted according to Article 520.04 of the Std. Specs. when the deck is poured at an ambient temperature other than 50° F.

Existing structural steel that will be in contact with new structural steel shall be cleaned and painted prior to erection as required by the special provision "Cleaning and Painting Contact Surface Areas of Existing Steel Structures". Cost included with Structural Steel Repair.

All new fasteners shall be high strength bolts. Holes shall be $\frac{15}{16}$"Ø for $\frac{7}{8}$"Ø high strength bolts, unless otherwise noted.

The existing structural steel coating contains lead. The Contractor shall take appropriate precautions to deal with the presence of lead on this project.

Cleaning & painting of all contact surfaces shall meet the requirements for Primary Connections as specified in the special provision for "Cleaning and Painting Contact Surfaces of Existing Steel Structures" except as noted.

INDEX OF SHEETS

TOTAL BILL OF MATERIAL

	ITEM	UNIT	SUPER	SUB	TOTAL
	Concrete Removal	Cu. Yd.	38.2		38.2
	Concrete Superstructure	Cu. Yd.	38.7		38.7
	Concrete Structures	Cu. Yd.		13.8	13.8
	Reinforcement Bars, Epoxy Coated	Pound	4750	1590	6340
	Preformed Joint Strip Seal	Foot	124		124
*	Protective Coat	Sq. Yd.	85		85
	Structural Repair of Concrete (Depth ≤ 5")	Sq. Ft.		181.8	181.8
	Deck Slab Repair (Full Depth, Type II)	Sq. Yd.	2.4		2.4
	Deck Slab Repair (Partial)	Sq. Yd.	21.7		21.7
	Structural Steel Repair	Pound	200		200
	Protective Shield	Sq. Yd.	483		483

* On new concrete adjacent to joints only.

LICENSED STRUCTURAL ENGINEER
ANGELA L. NEMSKY
081-005503
STATE OF ILLINOIS

Angela L. Nemsky
12/01/2020
EXPIRES 11/30/2022

MODEL: Default
FILE NAME: P:\2019\19038BWO6 I-74 Bridge PSEs\4 CADD - DWG\4.4 Struc\0900077-0900077-68F54-001_General Plan and Elevation.dgn

TWM ENGINEERING & GEOSPATIAL SERVICES
TWM, INC.
WWW.TWM-INC.COM
IL DESIGN FIRM LICENSE NO: 184-001220

USER NAME = ckoltveit	DESIGNED - CDK	REVISED -	
	CHECKED - ALN	REVISED -	
PLOT SCALE = 0:2.0000 ':' / in.	DRAWN - CDK	REVISED -	
PLOT DATE = 12/1/2020	CHECKED - ALN	REVISED -	

STATE OF ILLINOIS
DEPARTMENT OF TRANSPORTATION

GENERAL PLAN & ELEVATION
SN 090-0077
SHEET 1 OF 29 SHEETS

F.A.I. RTE.	SECTION	COUNTY	TOTAL SHEETS	SHEET NO.
74	90-15[HB(1-4);VB;B]BP,BJR,BRR	TAZEWELL	192	151

CONTRACT NO. 68F54
ILLINOIS FED. AID PROJECT

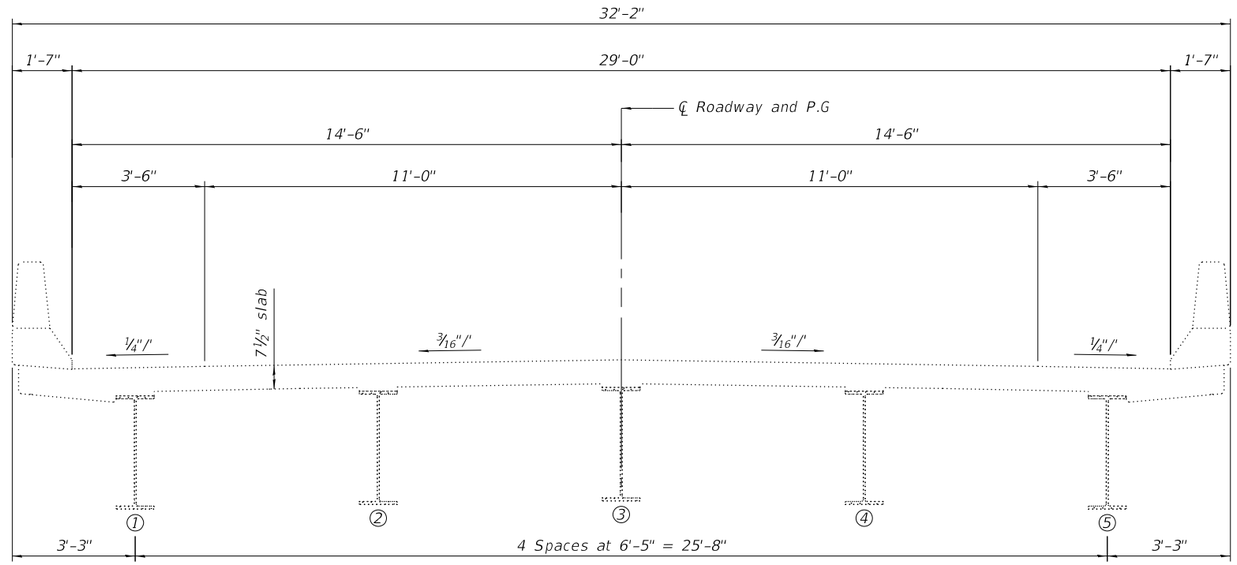

CROSS SECTION AT PIER 2 & MIDSPAN

(Looking North)

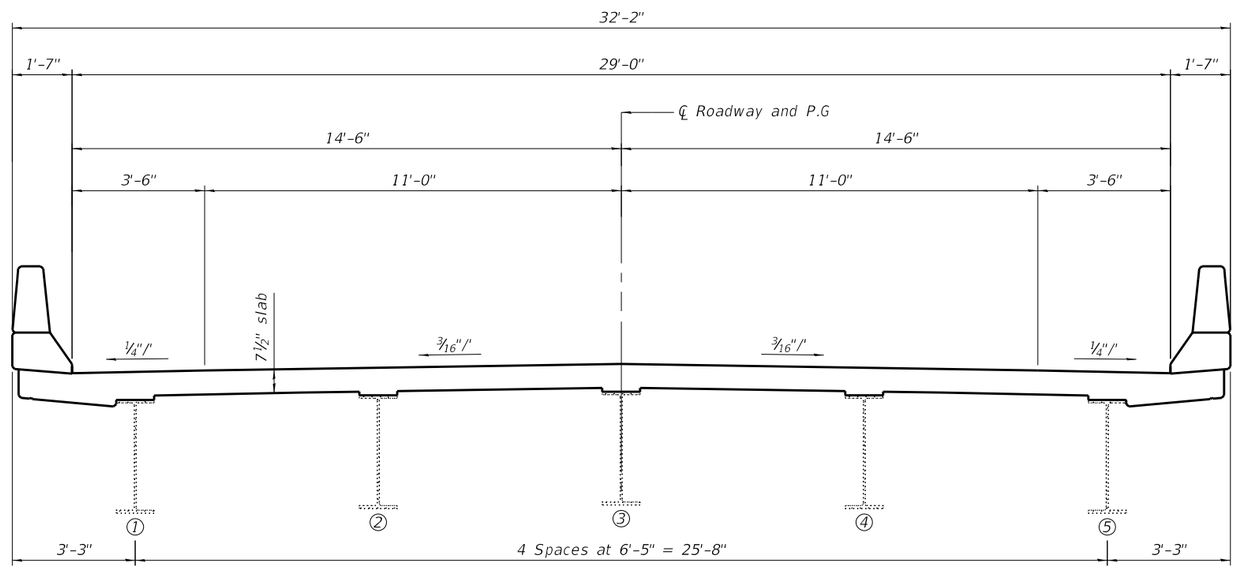

CROSS SECTION AT ABUTMENTS AND PIERS 1 & 3

(Looking North)

MODEL: Default
FILE NAME: P:\2019\19038\W06 I-74 Bridge PSEs\4 CADD - DWG\4.4 Struc\0900077-0900077-68F54-002_Cross Section.dgn

TWM ENGINEERING & GEOSPATIAL SERVICES	TWM, INC. WWW.TWM-INC.COM IL DESIGN FIRM LICENSE NO: 184-001220	USER NAME = ckoltveit	DESIGNED - DRA	REVISED -	STATE OF ILLINOIS DEPARTMENT OF TRANSPORTATION	BRIDGE CROSS SECTIONS SN. 090–0077	F.A.I. RTE.	SECTION	COUNTY	TOTAL SHEETS / SHEET NO.
			CHECKED - CDK	REVISED -			74	90-15(HB(1-4);VB;B)BP,BJR,BRR	TAZEWELL	192 / 152
		PLOT SCALE = 0:2.0000 ':' / in.	DRAWN - DRA	REVISED -					CONTRACT NO. 68F54	
		PLOT DATE = 12/1/2020	CHECKED - CDK	REVISED -		SHEET 2 OF 29 SHEETS		ILLINOIS	FED. AID PROJECT	

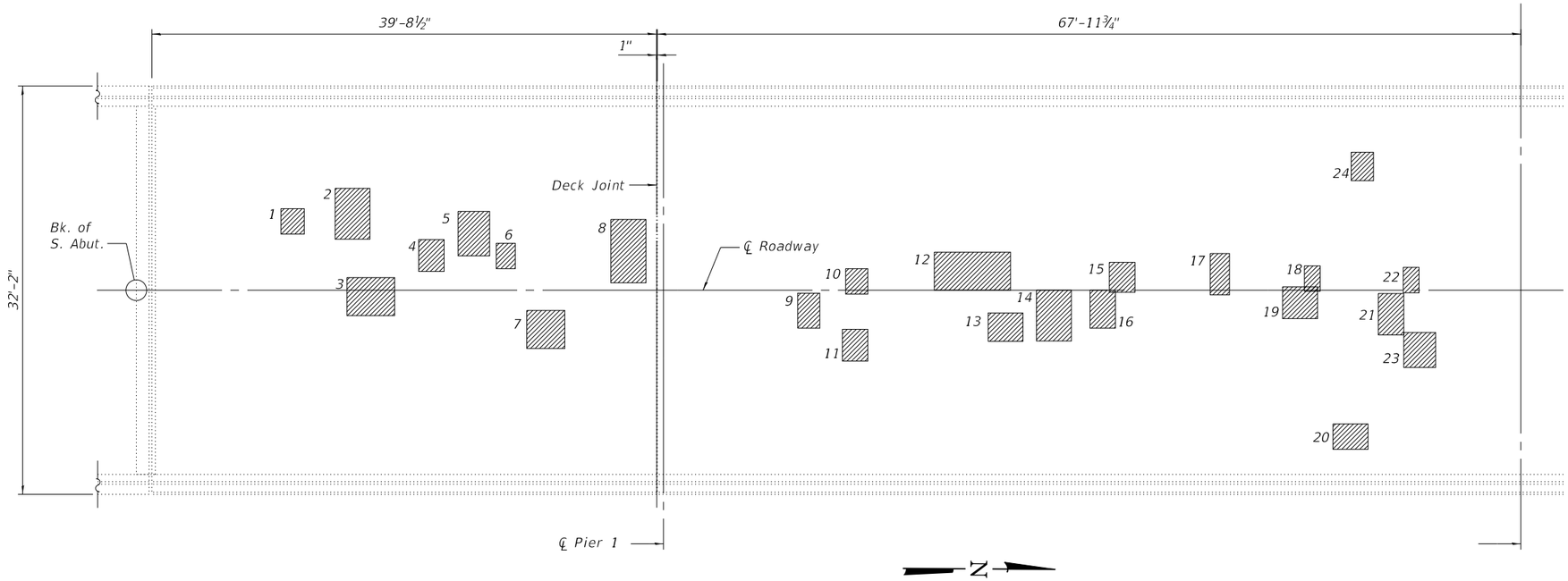

DECK REPAIRS

1	1'-10" x 2'-0"
2	2'-9" x 4'-0"
3	3'-9" x 3'-0"
4	2'-0" x 1'-9"
5	2'-6" x 3'-6"
6	1'-6" x 2'-0"
7	3'-0" x 3'-0"
8	2'-9" x 5'-0"
9	1'-9" x 2'-9"
10	1'-9" x 2'-0"
11	2'-0" x 2'-6"
12	6'-0" x 3'-0"
13	2'-9" x 2'-3'
14	2'-9" x 4'-0"
15	1'-9" x 2'-9"
16	2'-0" x 3'-0"
17	1'-6" x 3'-3"
18	1'-3" x 2'-0"
19	2'-9" x 2'-6"
20	2'-9" x 2'-0"
21	2'-0" x 3'-3"
22	1'-3" x 2'-0"
23	2'-6" x 2'-9"
24	2'-3" x 1'-9"
25	2'-6" x 3'-0"
26	3'-3" x 3'-3"
27	1'-9" x 2'-0"
28	2'-3" x 3'-9"
29	3'-0" x 4'-6"
30	1'-6" x 2'-6"
31	1'-6" x 2'-0"
32	1'-6" x 2'-6"

Notes:
The patch sizes and locations shown are estimated. The final patch size and location shall be determined by the Engineer.

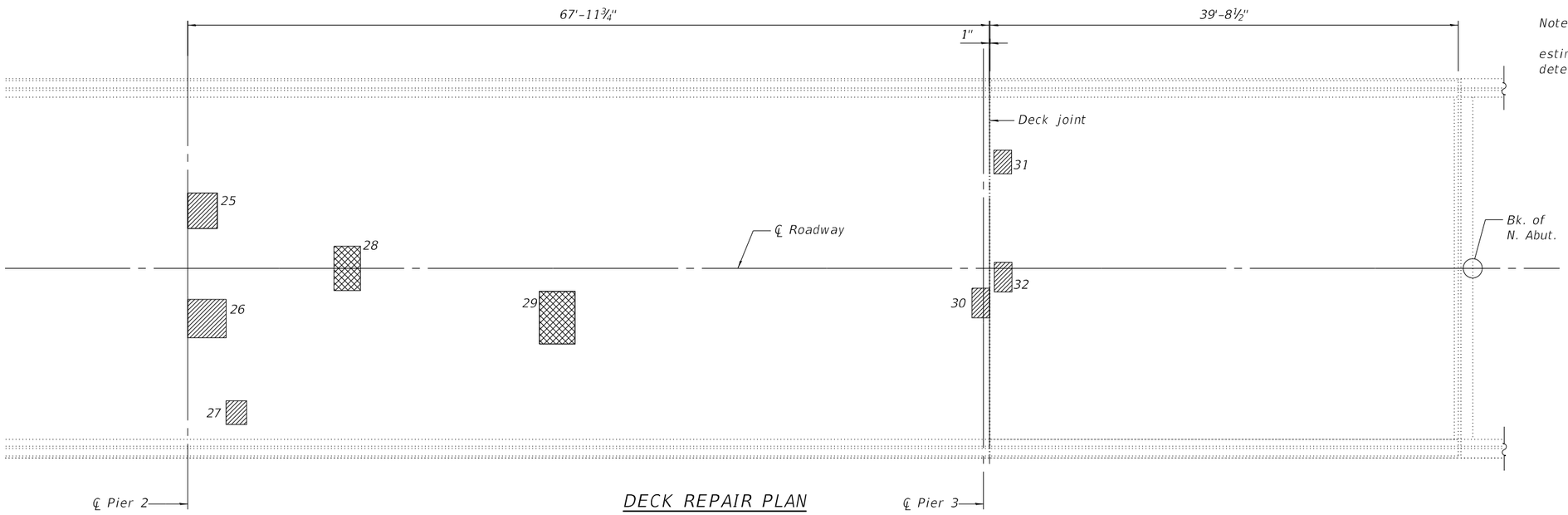

DECK REPAIR PLAN

Deck Slab Repair (Partial)

Deck Slab Repair (Full Depth, Type II)

BILL OF MATERIAL

ITEM	UNIT	QUANTITY
Deck Slab Repair (Full Depth, Type II)	Sq. Yd.	2.4
Deck Slab Repair (Partial)	Sq. Yd.	21.7

MODEL: Default
FILE NAME: P:\2019\19038\WO6 I-74 Bridge PSEs\4 CADD - DWG\4.4 Struc\0900077-0900077-68F54-003 Bridge Deck Repair Plan.dgn

TWM ENGINEERING & GEOSPATIAL SERVICES
TWM, INC.
WWW.TWM-INC.COM
IL DESIGN FIRM LICENSE NO: 184-001220

USER NAME = ckoltveit	DESIGNED - CDK	REVISED -	
	CHECKED - ALN	REVISED -	
PLOT SCALE = 0:2.0000 ':' / in.	DRAWN - CDK	REVISED -	
PLOT DATE = 12/1/2020	CHECKED - ALN	REVISED -	

STATE OF ILLINOIS
DEPARTMENT OF TRANSPORTATION

DECK REPAIR PLAN
SN 090-0077
SHEET 3 OF 29 SHEETS

F.A.I. RTE.	SECTION	COUNTY	TOTAL SHEETS	SHEET NO.
74	90-15[HB(1-4);VB;BJBP,BJR,BRR	TAZEWELL	192	153

CONTRACT NO. 68F54
ILLINOIS FED. AID PROJECT

This page intentionally left blank.

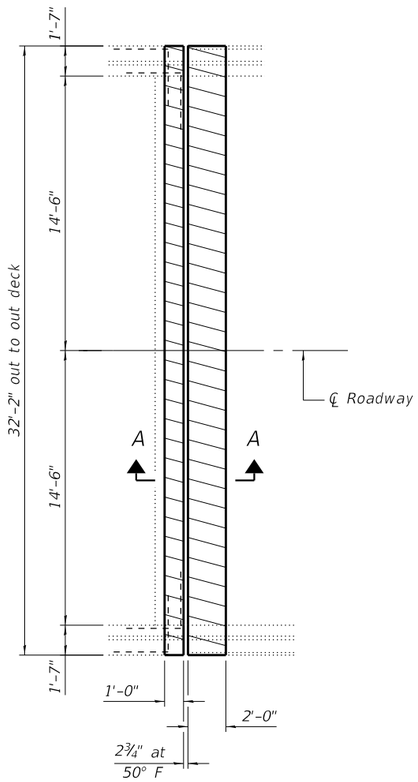

PLAN
CONCRETE REMOVAL AT S. ABUT.

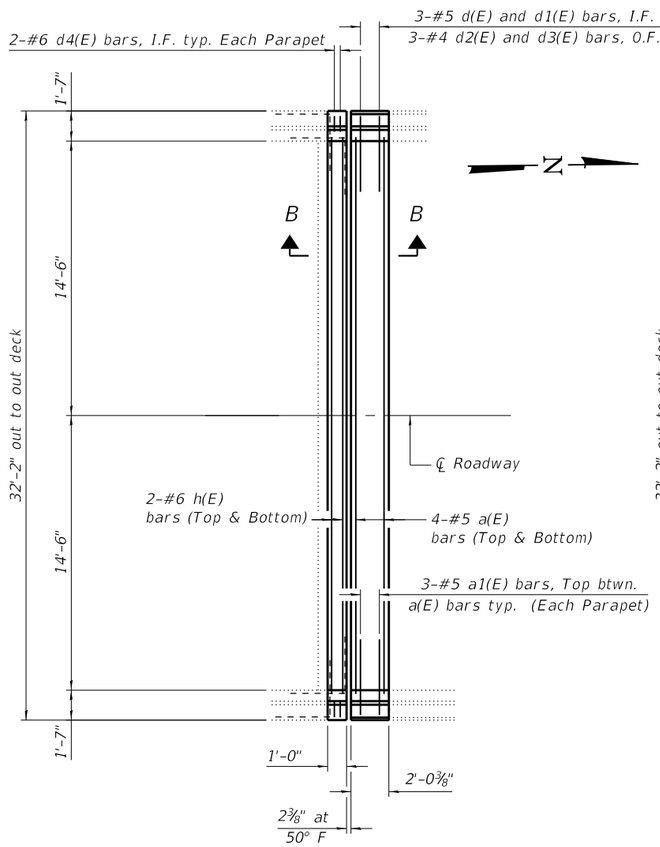

PLAN
CONCRETE REPLACEMENT AT S. ABUT.

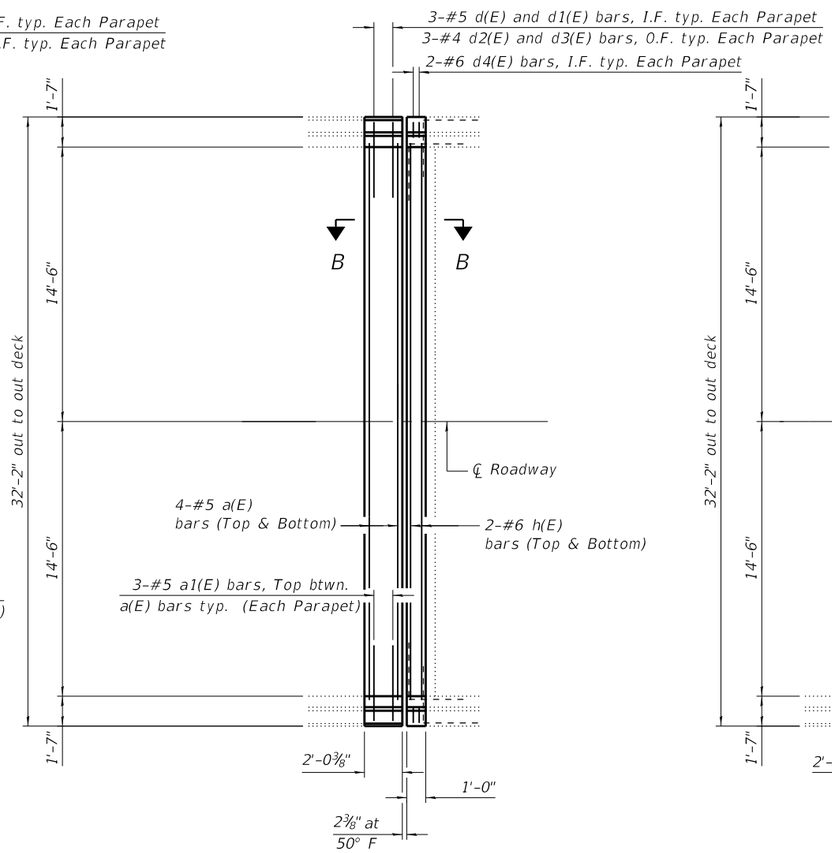

PLAN
CONCRETE REPLACEMENT AT N. ABUT.

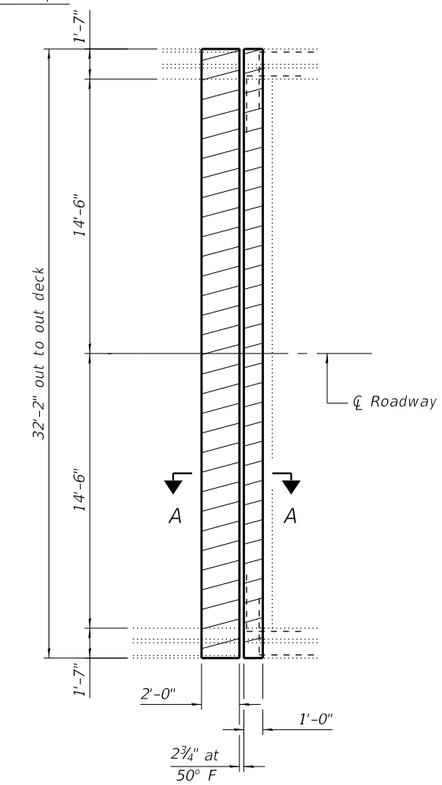

PLAN
CONCRETE REMOVAL AT N. ABUT.

Notes:
Hatched areas indicate Concrete Removal.
For Section views, see Sheet 7 of 29.
Dimensions are based on a Rolled Rail Strip Seal joint. If the contractor elects to use the Welded Rail Strip Seal Joint, deck dimensions may require adjustments to satisfy the details on Base Sheet EJ-SS.

MODEL: Default
FILE NAME: P:\2019\19038\WO6 I-74 Bridge PSE\4 CADD - DWG\4.4 Struc\0900077-0900077-68F54-005 Abutment Joint Repair Detail Plan.dgn

TWM ENGINEERING GEOSPATIAL SERVICES	TWM, INC. WWW.TWM-INC.COM IL DESIGN FIRM LICENSE NO: 184-001220	USER NAME = ckoltveit	DESIGNED - DRA	REVISED -	STATE OF ILLINOIS DEPARTMENT OF TRANSPORTATION
			CHECKED - CDK	REVISED -	
		PLOT SCALE = 0:2.0000 ':' / in.	DRAWN - DRA	REVISED -	
		PLOT DATE = 12/1/2020	CHECKED - CDK	REVISED -	

JOINT REPLACEMENT AT ABUTMENTS PLAN
SN. 090-0077
SHEET 5 OF 29 SHEETS

F.A.I. RTE.	SECTION	COUNTY	TOTAL SHEETS	SHEET NO.
74	90-15[HB(1-4);VB;B]BP,BJR,BRR	TAZEWELL	192	155
		CONTRACT NO. 68F54		
		ILLINOIS	FED. AID PROJECT	

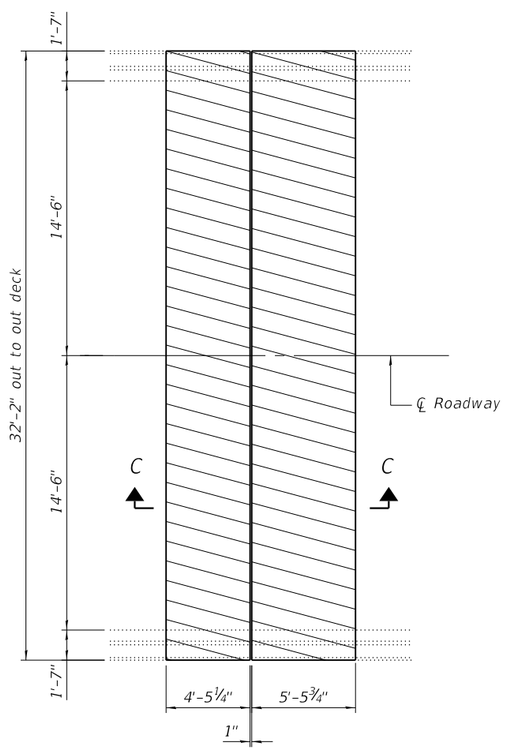

PLAN
CONCRETE REMOVAL AT PIER 1

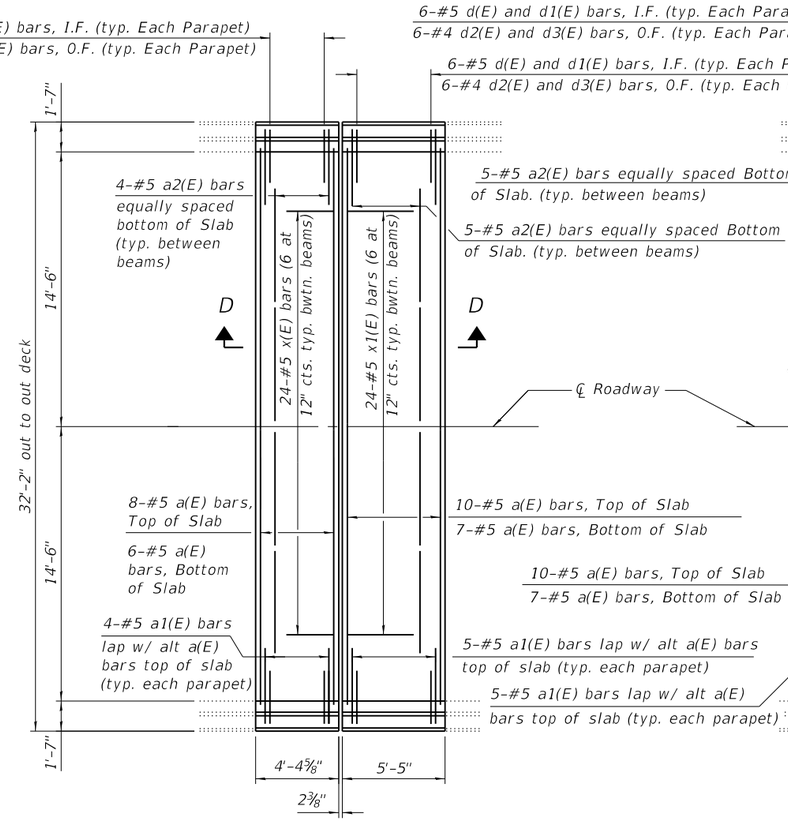

PLAN
CONCRETE REPLACEMENT AT PIER 1

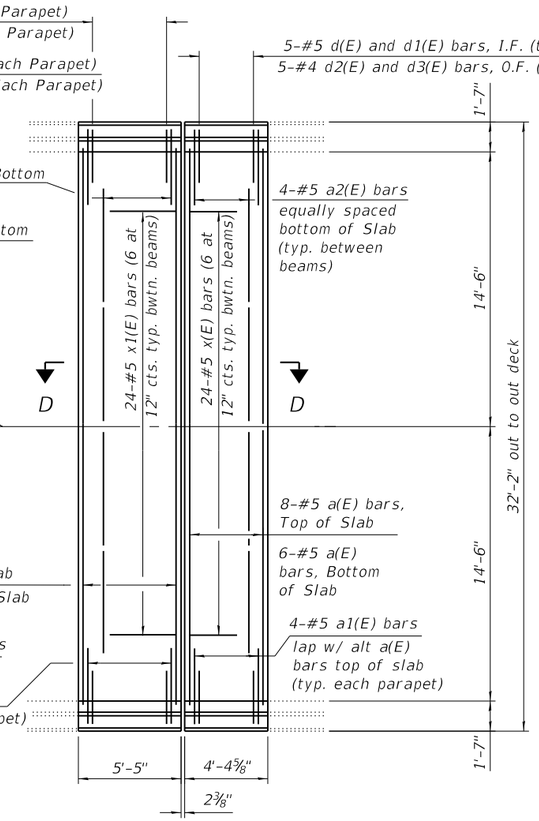

PLAN
CONCRETE REPLACEMENT AT PIER 3

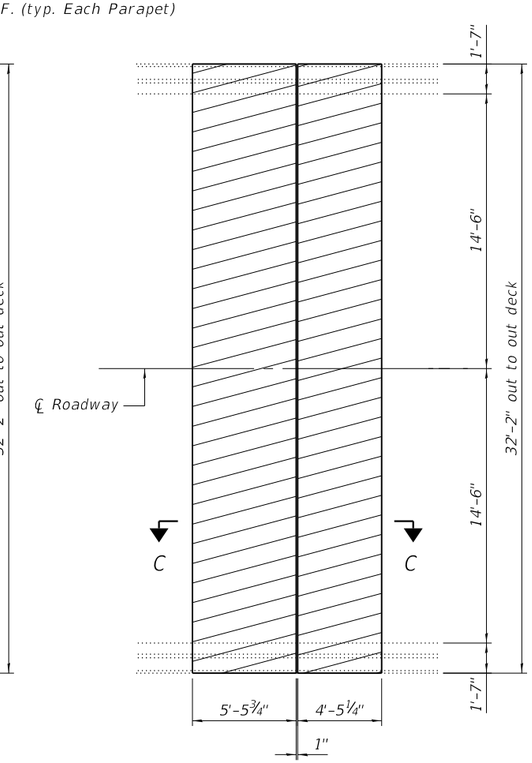

PLAN
CONCRETE REMOVAL AT PIER 3

N

Notes:
Hatched areas indicate Concrete Removal.
For Section views, see Sheet 7 of 29.
Dimensions are based on a Rolled Rail Strip Seal joint. If the contractor elects to use the Welded Rail Strip Seal Joint, deck dimensions may require adjustments to satisy the details on Base Sheet EJ-SS.

MODEL: Default
FILE NAME: P:\2019\190388\WO6 I-74 Bridge PSEs\4 CADD - DWG\4.4 Struc\0900077\0900077-68F54-006_Pier Joint Repair Detail Plan.dgn

TWM ENGINEERING & GEOSPATIAL SERVICES	TWM, INC. WWW.TWM-INC.COM IL DESIGN FIRM LICENSE NO: 184-001220	USER NAME = ckoltveit	DESIGNED - DRA	REVISED -	STATE OF ILLINOIS DEPARTMENT OF TRANSPORTATION	JOINT REPLACEMENT AT PIERS 1 & 3 PLAN SN. 090-0077	F.A.I. RTE.	SECTION	COUNTY	TOTAL SHEETS	SHEET NO.
			CHECKED - CDK	REVISED -			74	90-15[HB(1-4);VB;B]BP,BJR,BRR	TAZEWELL	192	156
		PLOT SCALE = 0:2.0000 ':" / in.	DRAWN - DRA	REVISED -					CONTRACT NO. 68F54		
		PLOT DATE = 12/1/2020	CHECKED - CDK	REVISED -		SHEET 6 OF 29 SHEETS		ILLINOIS	FED. AID PROJECT		

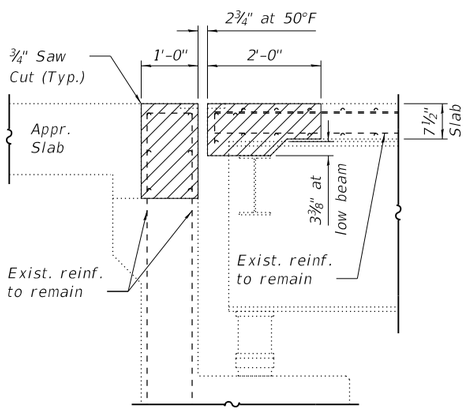

SECTION A-A
(Dims. at Rt. L's to end of deck)

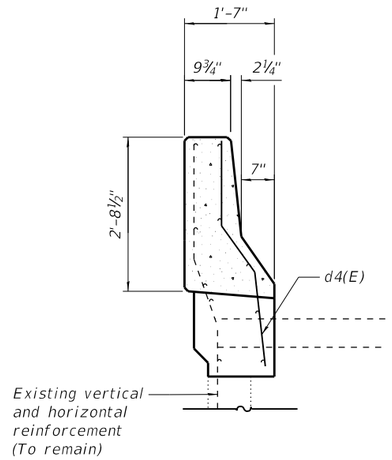

SECTION THRU WINGWALL
(Showing Proposed)

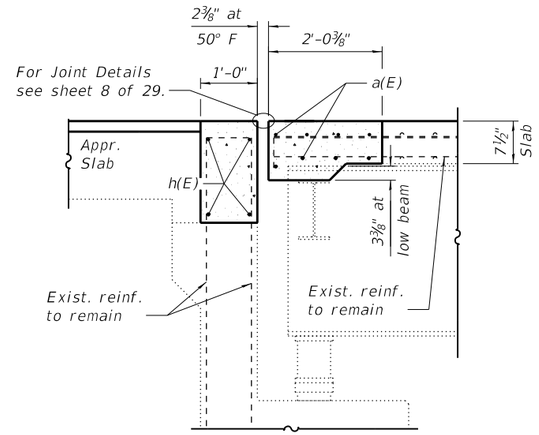

SECTION B-B
(Dims. at Rt. L's to end of deck)

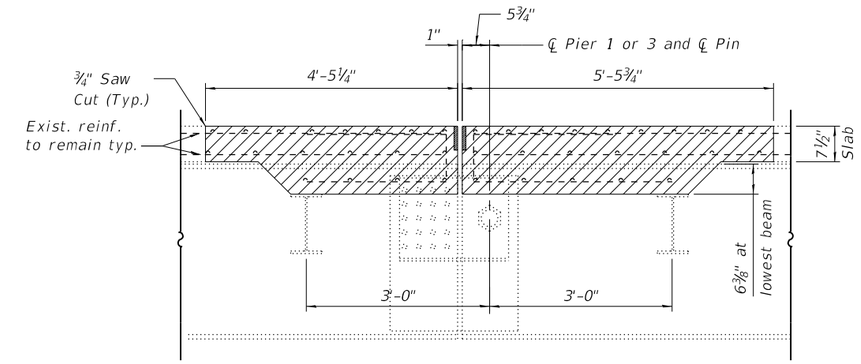

SECTION C-C

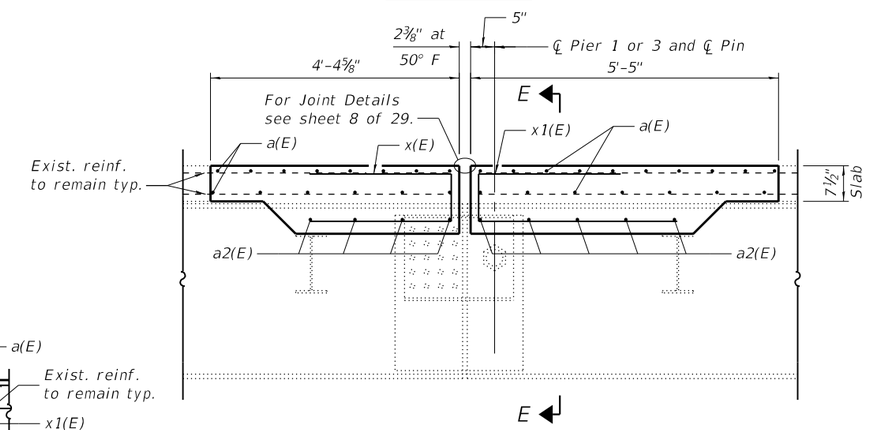

SECTION D-D

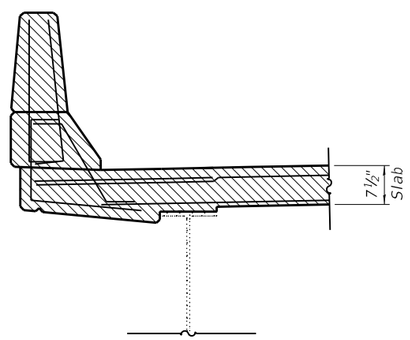

SECTION THRU PARAPET
(Showing Removal)

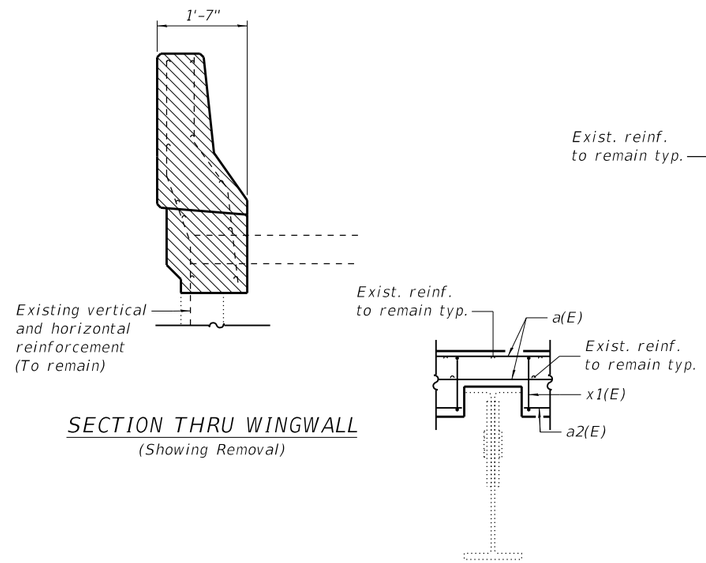

SECTION THRU WINGWALL
(Showing Removal)

SECTION E-E

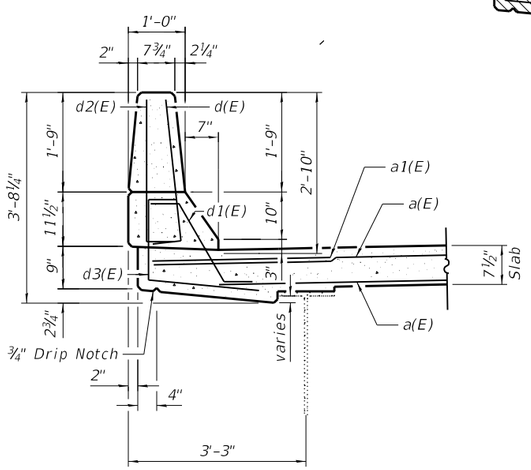

SECTION THRU PARAPET
(Showing Proposed)

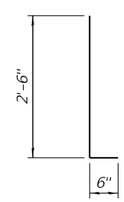

BARS d(E) & d2(E)

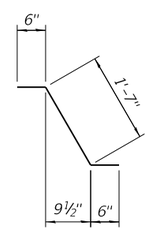

BAR d1(E)

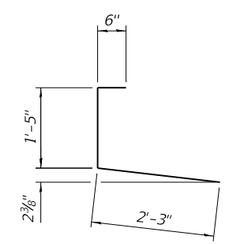

BAR d3(E)

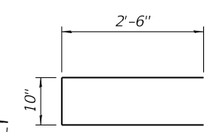

BAR x(E)

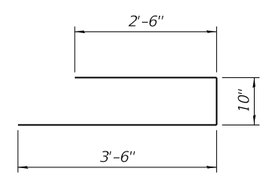

BAR x1(E)

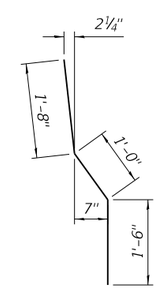

BAR d4(E)

TOTAL BILL OF MATERIAL

Bar	No.	Size	Length	Shape
a(E)	78	#5	31'-8"	
a1(E)	48	#6	4'-0"	
a2(E)	36	#5	6'-0"	
d(E)	56	#5	3'-0"	
d1(E)	56	#5	2'-7"	
d2(E)	56	#4	3'-0"	
d3(E)	56	#4	4'-2"	
d4(E)	8	#6	4'-2"	
h(E)	8	#6	31'-8"	
x(E)	48	#5	5'-10"	
x1E)	48	#5	6'-10"	
Concrete Removal			Cu. Yd.	38.2
Concrete Superstructure			Cu. Yd.	38.7
Reinforcement Bars, Epoxy Coated			Pound	4750

MODEL: Default
FILE NAME: P:\2019\1903BBWOR I-74 Bridge PSES\4 CADD - DWG\4.4 Struc\0900077\0900077-68F54-007 Joint Repair Details .dgn

TWM ENGINEERING GEOSPATIAL SERVICES
TWM, INC.
WWW.TWM-INC.COM
IL DESIGN FIRM LICENSE NO: 184-001220

USER NAME = ckoltveit	DESIGNED - DRA	REVISED -	
	CHECKED - CDK	REVISED -	
PLOT SCALE = 0:2.0000 ':' / in.	DRAWN - DRA	REVISED -	
PLOT DATE = 12/1/2020	CHECKED - CDK	REVISED -	

STATE OF ILLINOIS
DEPARTMENT OF TRANSPORTATION

JOINT REPLACEMENT DETAILS
SN. 090-0077

SHEET 7 OF 29 SHEETS

F.A.I. RTE.	SECTION	COUNTY	TOTAL SHEETS	SHEET NO.
74	90-15[HB(1-4);VB;B]BP,BJR,BRR	TAZEWELL	192	157
		CONTRACT NO. 68F54		
		ILLINOIS	FED. AID PROJECT	

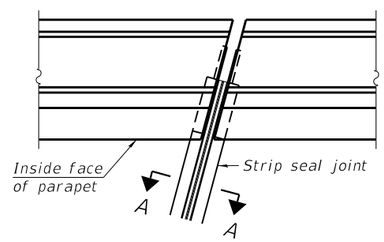

FOR SKEWS ≤ 30°

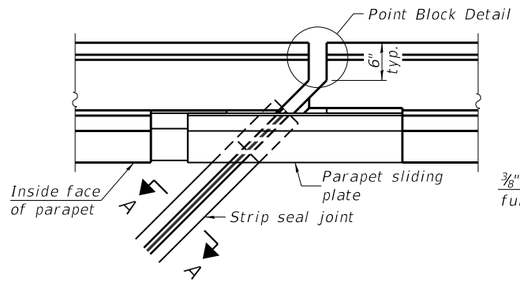

FOR SKEWS > 30°

PLAN AT PARAPET

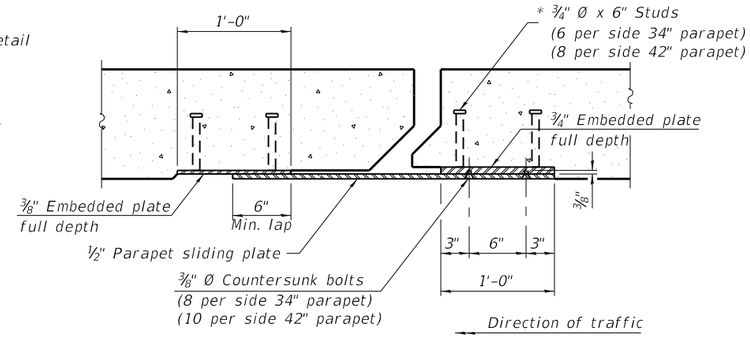

SECTION B-B

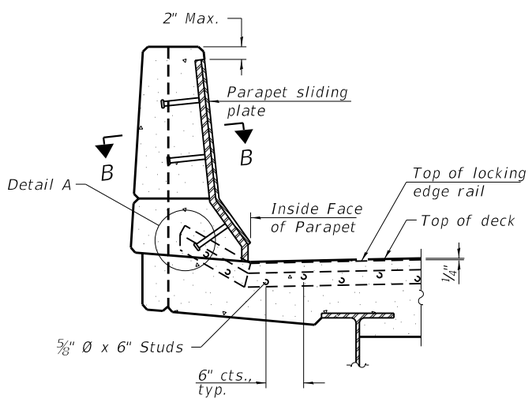

ELEVATION AT PARAPET

(Skews > 30° shown. Skews ≤ 30° similar except as shown in plan view.)

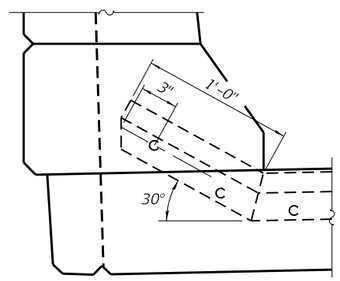

DETAIL A

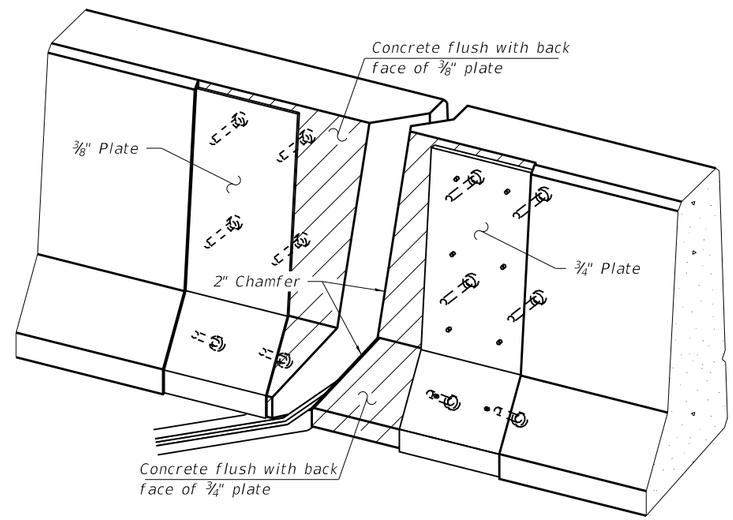

TRIMETRIC VIEW

(Showing embedded plates only)

Notes:

The strip seal shall be made continuous and shall have a minimum thickness of ¼". The configuration of the strip seal shall match the configuration of the locking edge rails. Open or "webbed" strip seal gland configurations are not permitted. The gland shall be sized for a maximum rated movement of 4 inches.

The locking edge rails depicted are configured for typical applications and are conceptual only. The actual configuration of the locking edge rails and matching strip seal may vary from manufacturer to manufacturer provided they fit the application and meet the minimum anchorage shown. Flanged edge rails, however, will not be allowed. Locking edge rails may exceed the 4½" maximum depth provided the anchorage system is revised according to the manufacturer's recommendation.

The manufacturer's recommended installation methods shall be followed.

All steel components shall be galvanized after fabrication according to Article 520.03 of the Standard Specifications.

The Maximum space between locking edge rail segments shall be 3/16" and sealed with a suitable sealant; however, any rail joint within 10' measured perpendicular to the face of the curb or parapet shall be welded as shown in the locking edge rail splice detail.

Cost of parapet sliding plates, embedded plates, and anchorage studs included with Preformed Joint Strip Seal.

34" F-shape barrier shown, 42" F-shape similar as noted.

The concrete opening below the strip seal will vary based on the locking edge rail chosen by the Contractor. Deck and parapet lengths shown elsewhere in the plans are dimensioned to the concrete opening, not the joint opening, and are based on the rolled locking edge rail. If the Contractor elects to use a different locking edge rail, dimensional adjustments may be required. One exception to this would be the strip seal joint at the end of the precast bridge approach slab. For these cases the pavement connector length shall be adjusted, not the length of the bridge approach slab.

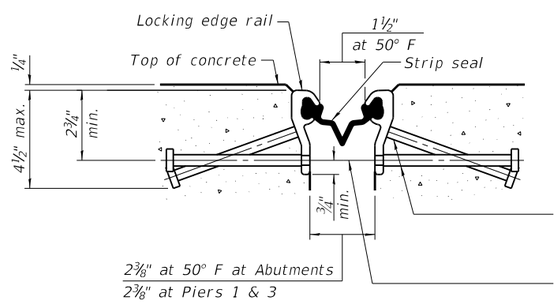

SHOWING ROLLED RAIL JOINT

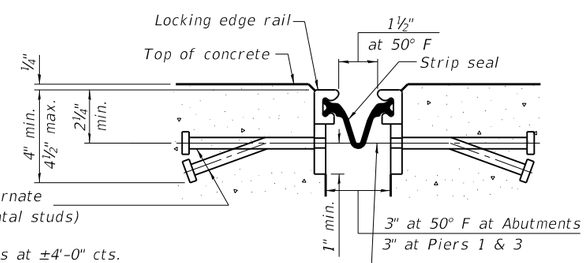

SHOWING WELDED RAIL JOINT

* ⅝" Ø x 6" studs @ 6" cts. (alternate angled/bent studs with horizontal studs)

⅜" ϕ threaded rods in 7/16" ϕ holes at ±4'-0" cts. for holding the proper joint opening based on the temperature during the deck pour. Place to miss studs. All rods shall be burned, or sawed off flush with the plates after concrete is set.

SECTION A-A

* Granular or solid flux filled headed studs conforming to Article 1006.32 of the Std. Specs., automatically end welded.

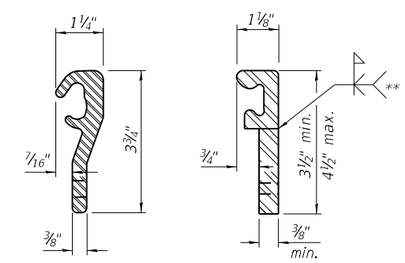

ROLLED (EXTRUDED) RAIL

WELDED RAIL

LOCKING EDGE RAILS

** Back gouge not required if complete joint penetration is verified by mock-up.

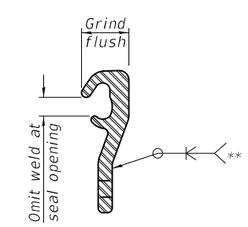

LOCKING EDGE RAIL SPLICE

The inside of the locking edge rail groove shall be free of weld residue. Rolled rail shown, welded rail similar.

TOTAL BILL OF MATERIAL

Item	Unit	Total
Preformed Joint Strip Seal	Foot	124

EJ-SS 8-11-17

MODEL: Default
FILE NAME: P:\2019\190388\W06 I-74 Bridge PSEs\4 CADD - DWG\4.4 Struc\09000077\09000077-68F54-008 Preformed Jdnt Strip Seal.dgn

TWM ENGINEERING GEOSPATIAL SERVICES
TWM, INC. WWW.TWM-INC.COM
IL DESIGN FIRM LICENSE NO: 184-001220

USER NAME = ckoltveit	DESIGNED - DRA	REVISED -	
	CHECKED - CDK	REVISED -	
PLOT SCALE = 0:2.0000 ':" / in.	DRAWN - DRA	REVISED -	
PLOT DATE = 12/1/2020	CHECKED - CDK	REVISED -	

STATE OF ILLINOIS
DEPARTMENT OF TRANSPORTATION

PREFORMED JOINT STRIP SEAL
STRUCTURE NO. 090-0077

SHEET 8 OF 29 SHEETS

F.A.I. RTE.	SECTION	COUNTY	TOTAL SHEETS	SHEET NO.
74	90-15[HB(1-4);VB;B]BP,BJR,BRR	TAZEWELL	192	158
		CONTRACT NO. 68F54		
	ILLINOIS	FED. AID PROJECT		

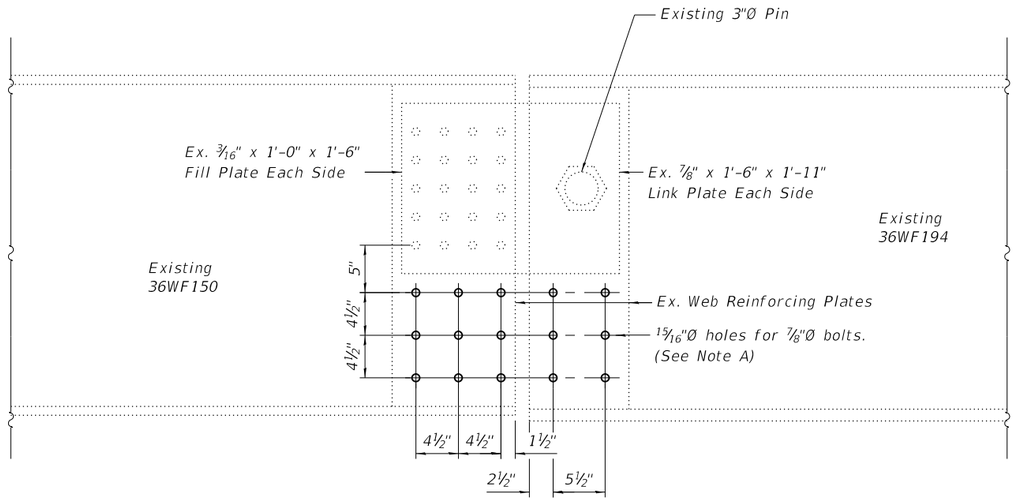

ELEVATION AT PIN ASSEMBLY

Note A:

The Contractor shall clean and remove as much rust as possible around and inside the void between the web reinforcing plate and the web. After the area has been cleaned, Devcon Plastic Steel Putty (A) (or approved equal) shall be injected into any remaining voids. Install bolts before injected material cures. Cost included with Structural Steel Repair.

BILL OF MATERIAL

ITEM	UNIT	QUANTITY
Structural Steel Repair	Pound	200

MODEL: Default
FILE NAME: P:\2019\190388\WO6 I-74 Bridge PSEs\4 CADD - DWGs\4.4 Struc\0900077-0900077-68F54-009_Structural Steel Repair.dgn

TWM ENGINEERING & GEOSPATIAL SERVICES
TWM, INC.
WWW.TWM-INC.COM
IL DESIGN FIRM LICENSE NO: 184-001220

USER NAME = ckoltveit	DESIGNED - CDK	REVISED -	
	CHECKED - BWP	REVISED -	
PLOT SCALE = 0:2.0000 ':" / in.	DRAWN - CDK	REVISED -	
PLOT DATE = 12/1/2020	CHECKED - BWP	REVISED -	

STATE OF ILLINOIS
DEPARTMENT OF TRANSPORTATION

STRUCTURAL STEEL REPAIR
SN 090-0077

SHEET 9 OF 29 SHEETS

F.A.I. RTE.	SECTION	COUNTY	TOTAL SHEETS	SHEET NO.
74	90-15[HB(1-4);VB;B]BP,BJR,BRR	TAZEWELL	192	159
		CONTRACT NO. 68F54		
	ILLINOIS	FED. AID PROJECT		

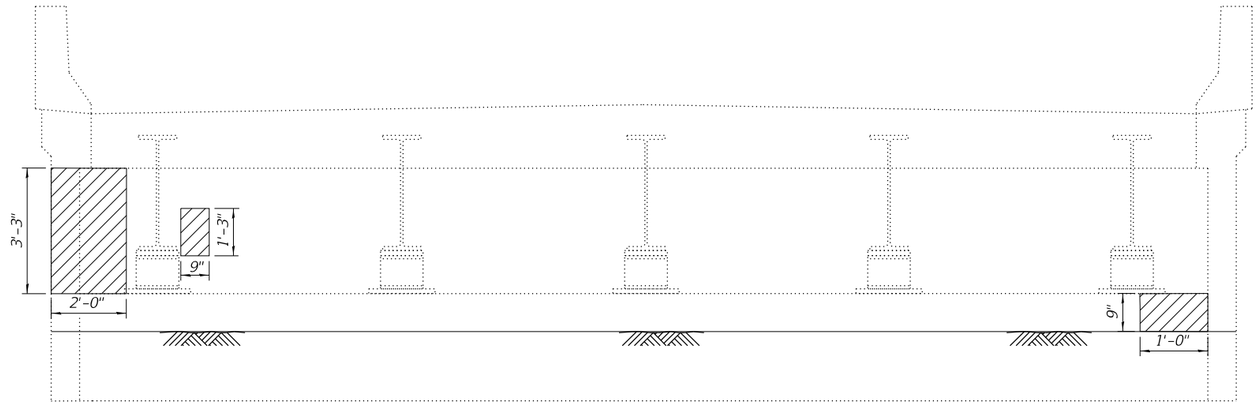

ELEVATION - REPAIR

- Structural Repair of Concrete
(Depth equal to or less than 5 inches)

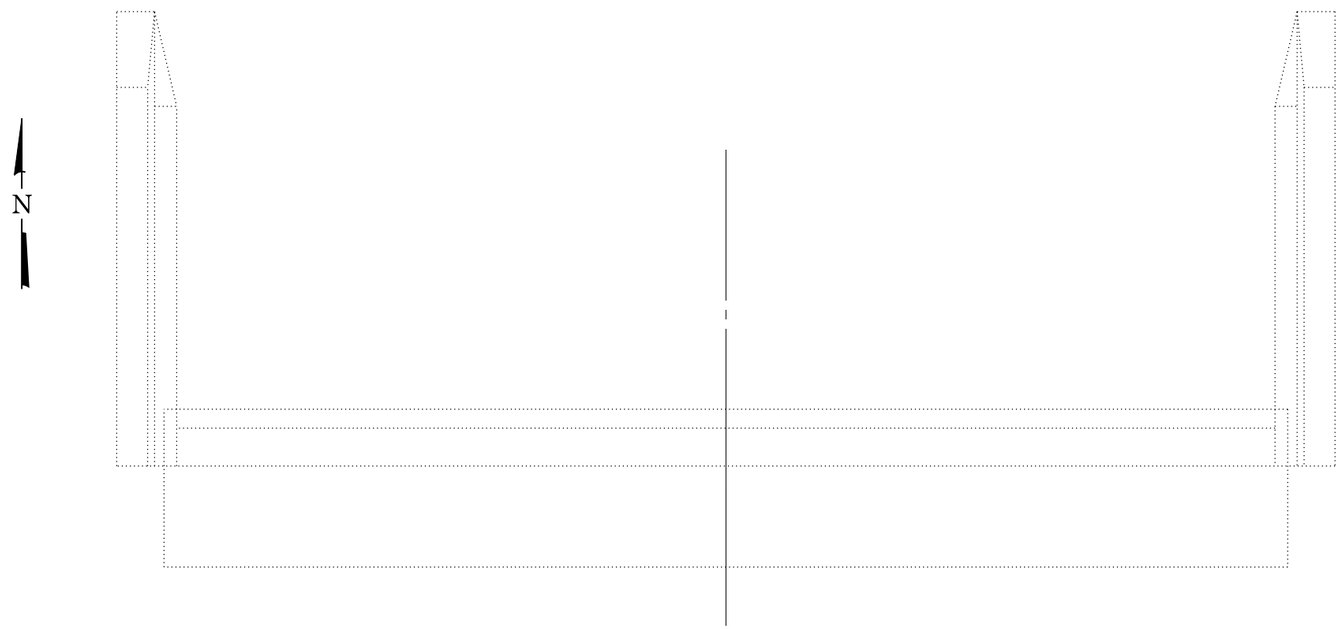

PLAN - REPAIR

BILL OF MATERIAL

Item	Unit	Quantity
Structural Repair of Concrete (Depth Equal to or Less than 5 Inches)	Sq. Ft.	8.2

MODEL: Default
FILE NAME: P:\2019\1993388\W06 I-74 Bridge PSEs\4 CADD - DWG\4.4 Struc\09000077\09000077-68F54-010-North Abutment Repair Details.dgn

TWM ENGINEERING GEOSPATIAL SERVICES
TWM, INC.
WWW.TWM-INC.COM
IL DESIGN FIRM LICENSE NO: 184-001220

USER NAME = ckoltveit	DESIGNED - NP	REVISED -	
	CHECKED - MJJ	REVISED -	
PLOT SCALE = 0:2.0000 ':" / in.	DRAWN - NP	REVISED -	
PLOT DATE = 12/1/2020	CHECKED - MJJ	REVISED -	

STATE OF ILLINOIS
DEPARTMENT OF TRANSPORTATION

N. ABUTMENT CONCRETE REPAIR DETAILS
STRUCTURE NO. 090-0077

SHEET 10 OF 29 SHEETS

F.A.I. RTE.	SECTION	COUNTY	TOTAL SHEETS	SHEET NO.
74	90-15(HB(1-4);VB:B]BP,BJR,BRR	TAZEWELL	192	160
		CONTRACT NO. 68F54		
	ILLINOIS	FED. AID PROJECT		

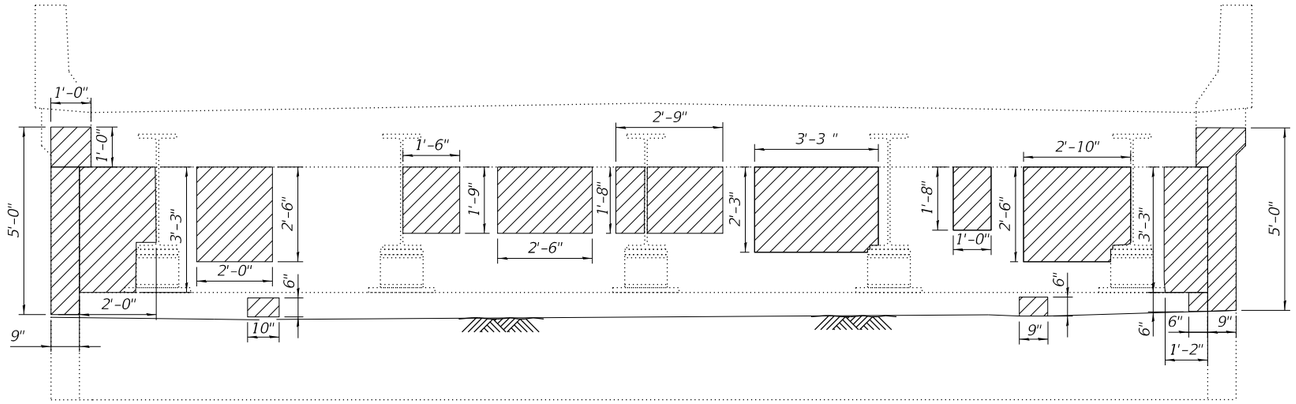

ELEVATION - REPAIR

- Structural Repair of Concrete
(Depth equal to or less than 5 inches)

PLAN - REPAIR

BILL OF MATERIAL

Item	Unit	Quantity
Structural Repair of Concrete (Depth Equal to or Less than 5 Inches)	Sq. Ft.	51.6

MODEL: Default
FILE NAME: P:\2019\190388\W06 I-74 Bridge PSEs\4 CADD - DWG\4.4 Struc\09000077\09000077468F54-011-South Abutment Repair Details.dgn

TWM ENGINEERING & GEOSPATIAL SERVICES
TWM, INC.
WWW.TWM-INC.COM
IL DESIGN FIRM LICENSE NO: 184-001220

USER NAME = ckoltveit	DESIGNED - NP	REVISED -	
	CHECKED - MJJ	REVISED -	
PLOT SCALE = 0:2.0000 ':" / in.	DRAWN - NP	REVISED -	
PLOT DATE = 12/1/2020	CHECKED - MJJ	REVISED -	

STATE OF ILLINOIS
DEPARTMENT OF TRANSPORTATION

S. ABUTMENT CONCRETE REPAIR DETAILS
STRUCTURE NO. 090-0077

SHEET 11 OF 29 SHEETS

F.A.I. RTE.	SECTION	COUNTY	TOTAL SHEETS	SHEET NO.
74	90-15[HB(1-4);VB;B]BP,BJR,BRR	TAZEWELL	192	161
		CONTRACT NO. 68F54		
	ILLINOIS	FED. AID PROJECT		

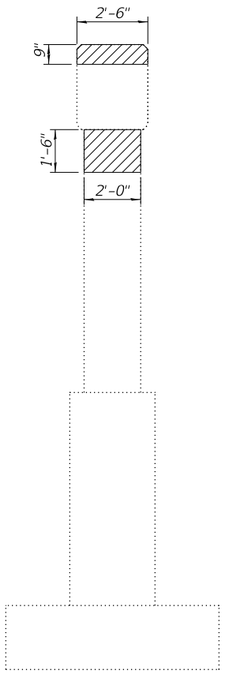

END ELEVATION

(Looking West)

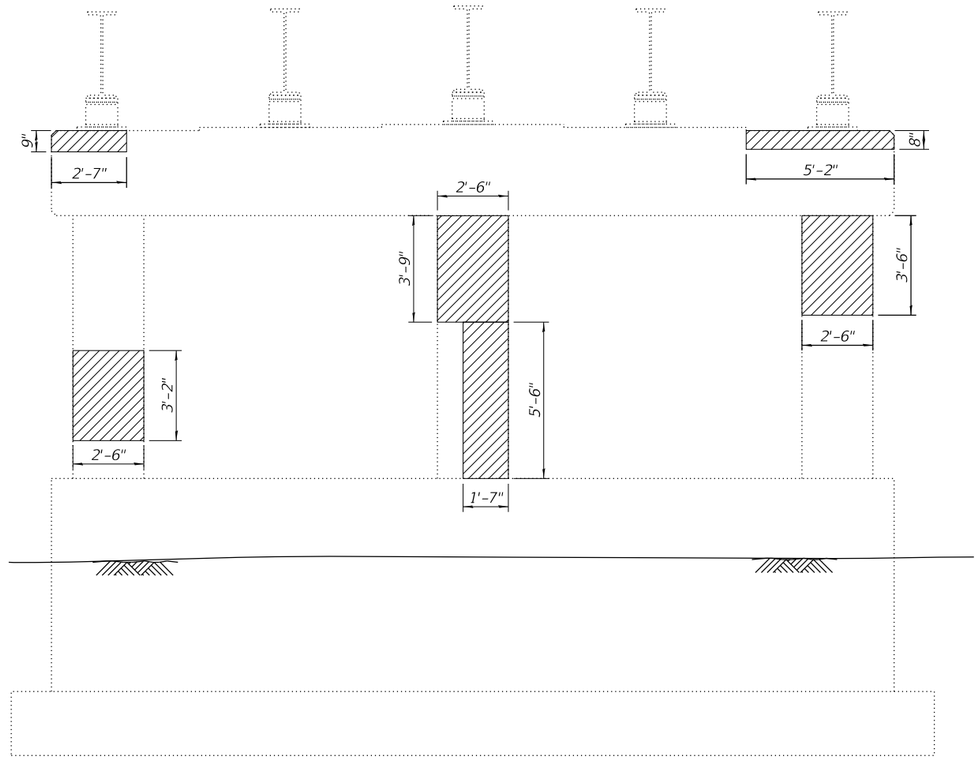

PIER 1 ELEVATION - REPAIR

(Looking North)

- Structural Repair of Concrete
(Depth equal to or less than 5 inches)

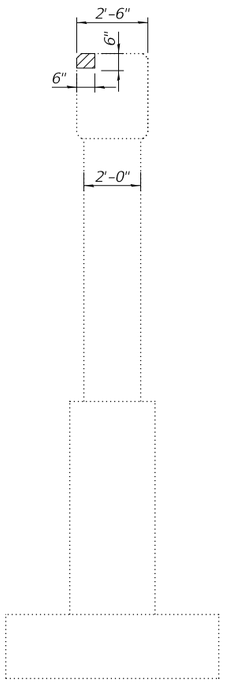

END ELEVATION

(Looking East)

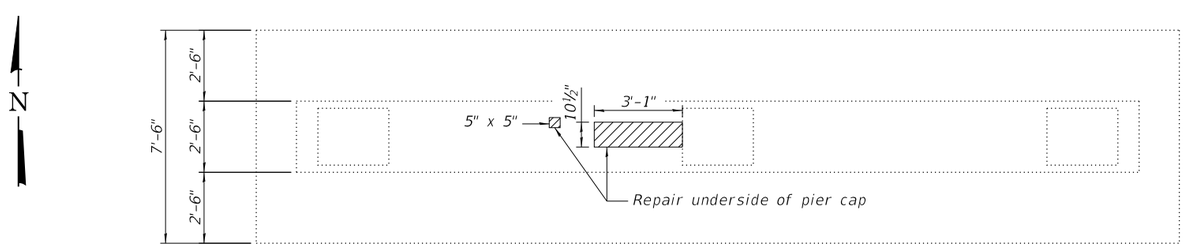

PIER 1 FOOTING PLAN

BILL OF MATERIAL

Item	Unit	Quantity
Structural Repair of Concrete (Depth Equal to or Less than 5 Inches)	Sq. Ft.	48.1

MODEL: Default
FILE NAME: P:\2019\19038\W06 I-74 Bridge PSEs\4 CADD - DWG\4.4 Struc\0900077-0900077-68F54-0122-Pier 1 Repair Details.dgn

TWM ENGINEERING GEOSPATIAL SERVICES
TWM, INC.
WWW.TWM-INC.COM
IL DESIGN FIRM LICENSE NO: 184-001220

USER NAME = ckoltveit	DESIGNED - NP	REVISED -	
	CHECKED - MJJ	REVISED -	
PLOT SCALE = 0:2.0000 ':' / in.	DRAWN - NP	REVISED -	
PLOT DATE = 12/1/2020	CHECKED - MJJ	REVISED -	

STATE OF ILLINOIS
DEPARTMENT OF TRANSPORTATION

PIER 1 REPAIR DETAILS
STRUCTURE NO. 090-0077

SHEET 12 OF 29 SHEETS

F.A.I. RTE.	SECTION	COUNTY	TOTAL SHEETS	SHEET NO.
74	90-15(HB(1-4);VB;B)BP,BJR,BRR	TAZEWELL	192	162
		CONTRACT NO. 68F54		
		ILLINOIS	FED. AID PROJECT	

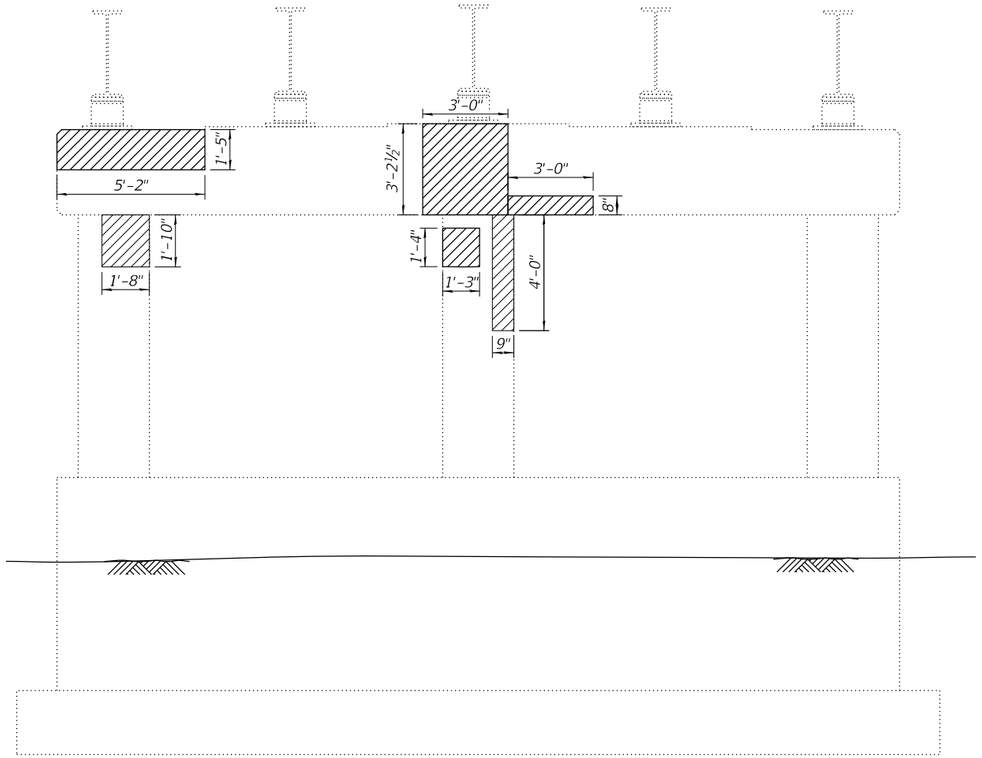

PIER 3 ELEVATION - REPAIR

(Looking North)

- Structural Repair of Concrete
(Depth equal to or less than 5 inches)

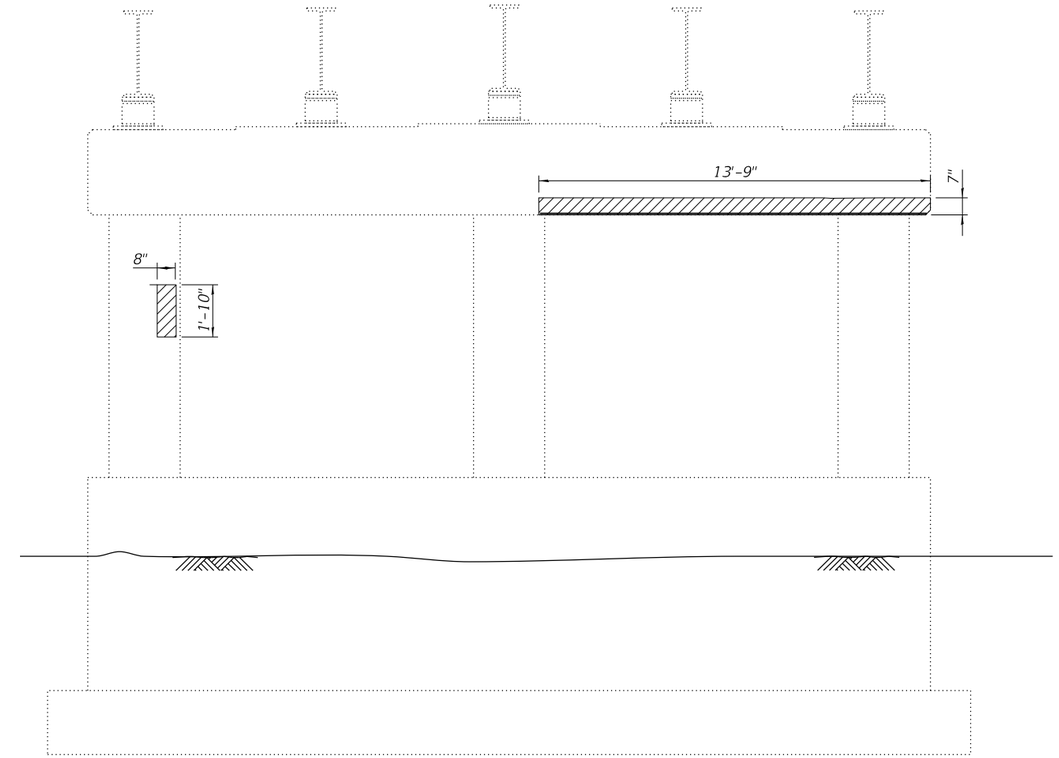

PIER 3 ELEVATION - REPAIR

(Looking South)

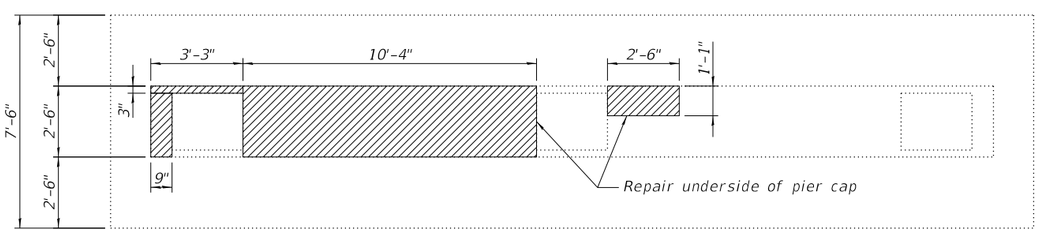

PIER 3 FOOTING PLAN

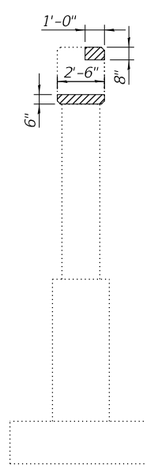

END ELEVATION

(Looking West)

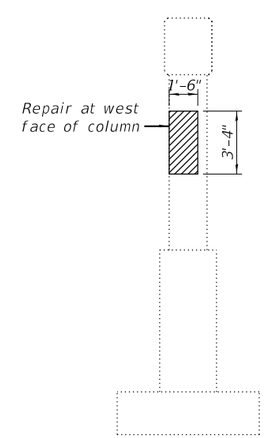

END ELEVATION

(Looking East)

BILL OF MATERIAL

Item	Unit	Quantity
Structural Repair of Concrete (Depth Equal to or Less than 5 Inches)	Sq. Ft.	73.9

MODEL: Default
FILE NAME: P:\2019\190388\WO6 I-74 Bridge PSEs\4 CADD - DWGs\4.4 Struc\0900077-68F54-013-Pier 3 Repair Details.dgn

TWM ENGINEERING GEOSPATIAL SERVICES
TWM, INC.
WWW.TWM-INC.COM
IL DESIGN FIRM LICENSE NO: 184-001220

USER NAME = ckoltveit	DESIGNED - NP	REVISED -	
	CHECKED - MJJ	REVISED -	
PLOT SCALE = 0:2.0000 ':' / in.	DRAWN - NP	REVISED -	
PLOT DATE = 12/1/2020	CHECKED - MJJ	REVISED -	

STATE OF ILLINOIS
DEPARTMENT OF TRANSPORTATION

PIER 3 REPAIR DETAILS
STRUCTURE NO. 090-0077

SHEET 13 OF 29 SHEETS

F.A.I. RTE.	SECTION	COUNTY	TOTAL SHEETS	SHEET NO.
74	90-15[HB(1-4);VB;B]BP,BJR,BRR	TAZEWELL	192	163
		CONTRACT NO. 68F54		
	ILLINOIS	FED. AID PROJECT		

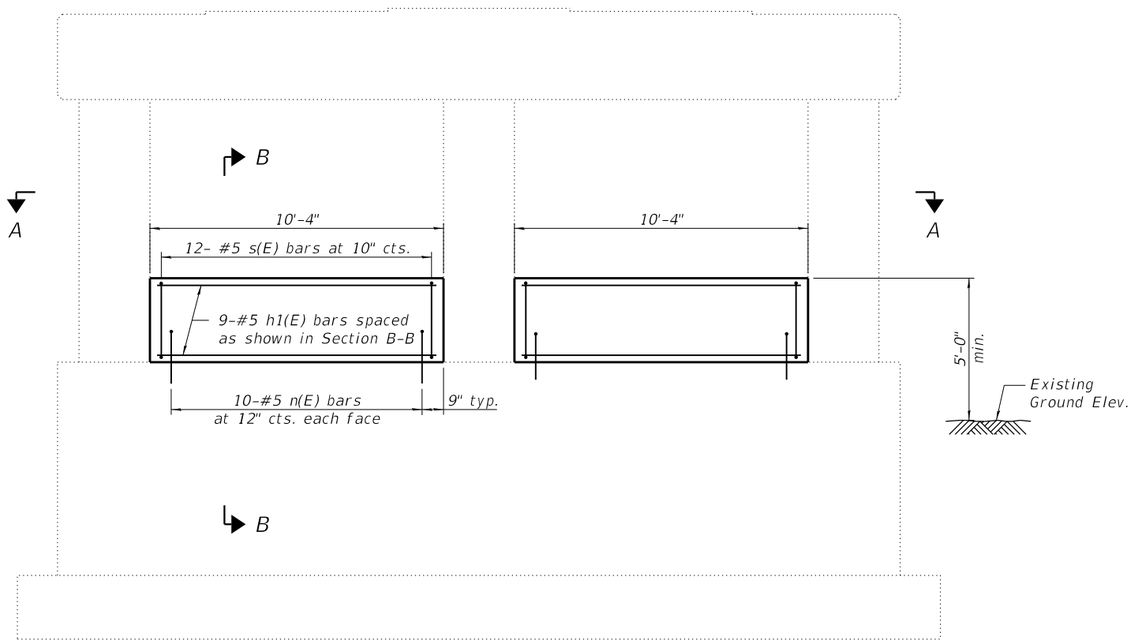

ELEVATION

(Pier 1 Shown, Piers 2 & 3 similar)

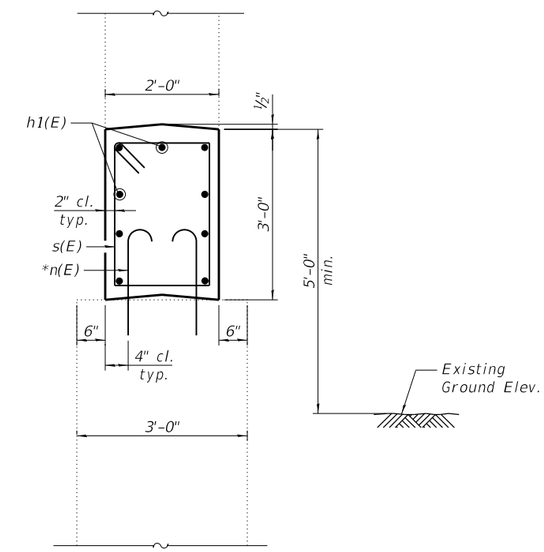

SECTION B-B

* Epoxy grout n(E) bars in 9" min. holes according to Article 584 of the Standard Specifications. Cost shall be included with Reinforcement Bars, Epoxy Coated

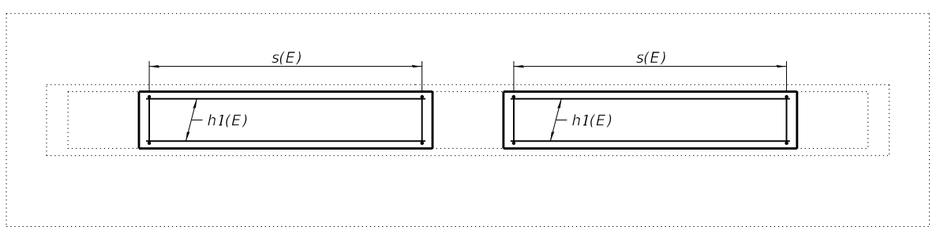

SECTION A-A

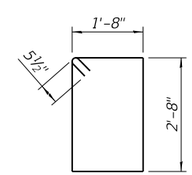

BAR s(E)

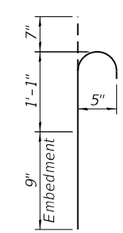

BAR n(E)

THREE PIERS
BILL OF MATERIAL

Bar	No.	Size	Length	Shape
h1(E)	54	#5	10'-0"	
n(E)	120	#5	2'-5"	
s(E)	72	#5	9'-7"	
Concrete Structures			Cu. Yd.	13.8
Reinforcement Bars, Epoxy Coated			Pound	1,590

MODEL: Default
FILE NAME: P:\2019\190388WO6 I-74 Bridge PSEs\4 CADD - DWG\4.4 Struc\0900077\0900077-68F54-014 Crashwall Extension.dgn

TWM ENGINEERING & GEOSPATIAL SERVICES
TWM, INC.
WWW.TWM-INC.COM
IL DESIGN FIRM LICENSE NO: 184-001220

USER NAME = ckoltveit	DESIGNED - NP	REVISED -	
	CHECKED - MJJ	REVISED -	
PLOT SCALE = 0:2.0000 ':' / in.	DRAWN - NP	REVISED -	
PLOT DATE = 12/1/2020	CHECKED - MJJ	REVISED -	

STATE OF ILLINOIS
DEPARTMENT OF TRANSPORTATION

PIER CRASHWALL MODIFICATIONS
STRUCTURE NO. 090-0077

SHEET 14 OF 29 SHEETS

F.A.I. RTE.	SECTION	COUNTY	TOTAL SHEETS	SHEET NO.
74	90-15[HB(1-4);VB;B]BP,BJR,BRR	TAZEWELL	192	164

CONTRACT NO. 68F54

ILLINOIS FED. AID PROJECT

This page intentionally left blank.

Bench Mark: TBM #5 N.E. wingwall I-74 bridge chisled " □" by guard rail end. Elev. 748.99

Existing Structure: #090-0077 is 218'-0" Bk. to Bk. of abut. and 29'-8" O. to O. of deck. Built as F.A.I. Route 5, Section 90-15 HB-4, at Sta. 922+60.73 in 1958.
The road will be closed and the traffic shall be detoured during rehabilitation of existing structure.

STATE OF ILLINOIS
DEPARTMENT OF TRANSPORTATION

ROUTE NO.	SECTION	COUNTY	TOTAL SHEETS	SHEET NO.
A.A.I. F.A.I. 74	(90)-15HB -4)I	TAZEWELL	13	10
FED. ROAD DIST. NO. 7	ILLINOIS	FED. AID PROJECT-		

SHEET NO. 1
13 SHEETS

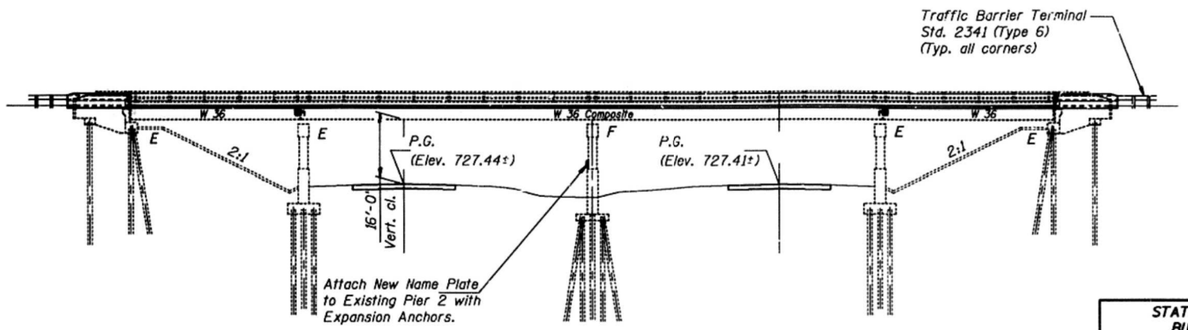

ELEVATION

STATION 922+60.73
BUILT 19 BY
STATE OF ILLINOIS
F.A.I. RT. 74 SEC. (90-15HB-4)I
F.A. PROJ. ACIR-74-4(192)
LOADING HS20
STR. NO. 090-0077

NAME PLATE
See Std. 2113

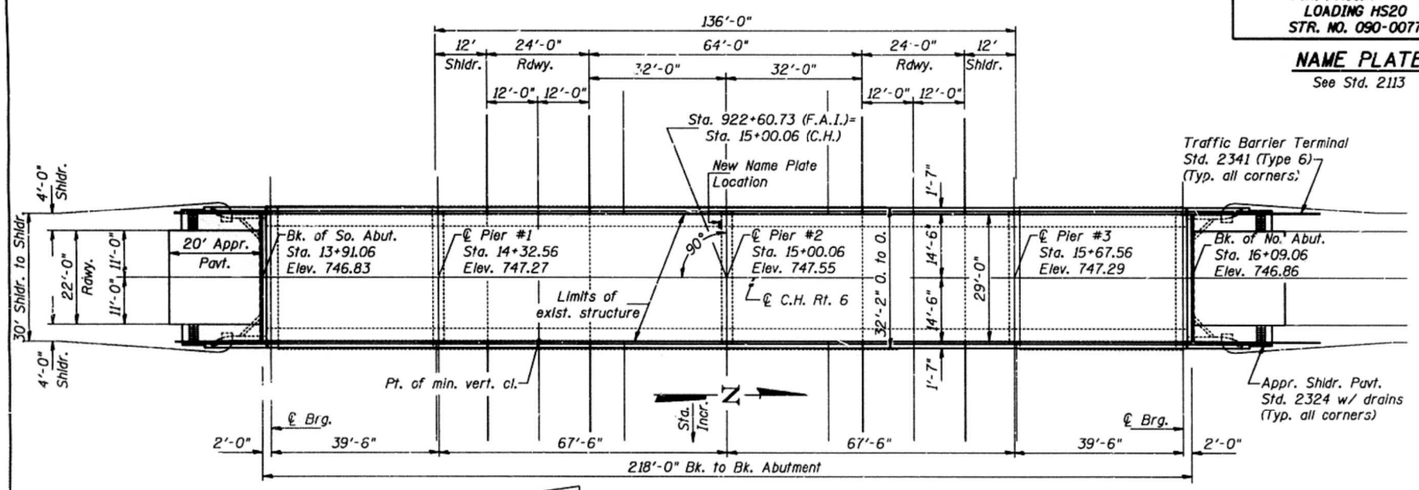

PLAN

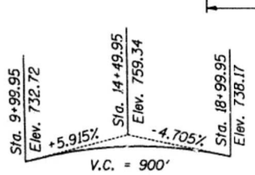

PROPOSED PROFILE GRADE
(C.H. Route 6)

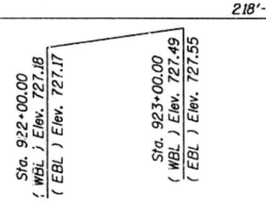

EXISTING PROFILE GRADE
(F.A.I. Route 74)

FOR INFORMATION ONLY

DESIGNED
CHECKED Michael Aeppli
DRAWN Paul W. Sweet J. S.
CHECKED TPN

January 3 1990
EXAMINED Greg J. Kaspar
ENGINEER OF BRIDGE DESIGN
PASSED Ralph E. Anderson
ENGINEER OF BRIDGES AND STRUCTURES
APPROVED
DIRECTOR OF HIGHWAYS

DESIGN SPECIFICATIONS

AASHTO (1983) and applicable Interims (1984 thru 1988)

LOADING HS 20-44

(New Construction)
Allow 25#/sq. ft. for future wearing surface.

DESIGN STRESSES

FIELD UNITS
f'c = 3,500 psi
fy = 60,000 psi (Reinf.)
fy = 33,000 psi (Structural Steel)

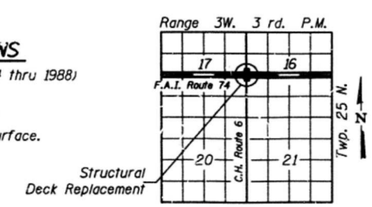

LOCATION SKETCH

GENERAL NOTES

All new structural steel shall be shop painted with the zinc-silicate and vinyl paint system. The color of the vinyl finish coats shall be Munsell No. 7.5G 4/8 Interstate Green.

Field welding of construction accessories will not be permitted to the bottom flange of beams nor to the top flange for a distance equal to one-fourth the span length each way from Pier 2. Field welding in other areas will be permitted only when approved by the Engineer.

Reinforcement bars shall conform to the requirements of AASHTO M-31, M-42 or M-53 Grade 60.

Plan dimensions and details relative to existing structure have been taken from existing plans and are subject to nominal construction variations. It shall be the Contractor's responsibility to verify such dimensions and details in the field and make necessary approved adjustments prior to construction or ordering of materials. Such variations shall not be cause for additional compensation for a change in the scope of the work, however, the Contractor will be paid for the quantity actually furnished at the unit price bid for the work.

Expansion bolts shall consist of approved expansion anchors, providing minimum certified proof load = 4,080 lbs., and $\frac{3}{4}$"ϕ x 12" hooked bolts, except as noted.

Two $\frac{1}{8}$" adjusting shims, of the dimensions of the bottom bearing plate shall be provided for each bearing in addition to all other plates or shims. For Type I Elastomeric bearings, shims of the dimensions of the top plate shall be provided and placed as detailed.

All top surfaces at Piers 1, 3 and Abutment seats shall receive Bridge Seat Sealer. Estimated Quantity = 307 Sq. Ft.

All accessible end areas of steel beams, exposed top of steel beams within 10 feet of the abutments, and and diaphragms, designated by the Engineer for painting shall be cleaned by Method I. The three coat lead and chromate free alkyd paint system shall be applied over all cleaned areas and paint damaged areas near pins, except the exposed top of steel beams within 10 feet of the abutments to be embedded in concrete shall receive only one coat of the primer of this system. The color of the final finish coat shall be Munsell No. 7.5G 4/8 Interstate Green. See Special Provisions for cleaning and painting steel structures.

Prior to pouring the new concrete for the deck, all loose rust, loose mill scale, loose paint and all other foreign material shall be removed from the remaining embedded portions of the beam flanges. The removal shall be accomplished in accordance with the requirements of the SSPC Surface Preparation Specifications SP7 for Brush-Off Blast Cleaning.

TOTAL BILL OF MATERIAL

Item	Unit	Super	Sub	Total
Concrete Removal	Cu. Yd.		12	12
Expansion Bolts $\frac{3}{4}$"	Each		86	86
* Removal of Existing Concrete Deck	Each	1		1
Structure Excavation	Cu. Yd.		13	13
Preformed Joint Seal $1\frac{3}{4}$"	Lin. Ft.	67		67
Preformed Joint Seal 4"	Lin. Ft.	67		67
Class X Concrete Superstructure	Cu. Yd.	232.5		232.5
Protective Coat	Sq. Yd.	201		201
Elastomeric Bearing Assembly Type I	Each		10	10
Elastomeric Bearing Assembly Type II	Each		10	10
Class X Concrete	Cu. Yd.		9.2	9.2
Structural Steel	Pound	3990	5920	9910
Stud Shear Connectors	Each	1960		1960
Cleaning and Painting Steel Bridge	L.S.	1		1
Reinforcement Bars, Epoxy Coated	Pound	49010	2980	51990
Name Plates	Each	1		1
Bridge Seat Sealer	L.S.		1	1
Pin Replacement	Each	10		10
Jack and Remove Existing Bearings	Each	20		20

* Cost of the removal of existing bridge railing is incidental to "Removal of Existing Concrete Deck".

GENERAL PLAN
C.H. RTE. 6 OVER F.A.I. RTE. 74
F.A.I. RTE. 74 SECTION (90-15HB-4)I
TAZEWELL COUNTY
STATION 922+60.73 (F.A.I.)
STRUCTURE NUMBER 090-0077

MODEL: Default
FILE NAME: P:\2019\190388\W06 I-74 Bridge PSEs\4 CADD - DWGs\4.4 Struc\090007\090007-68F54-016-Existing Plan and Elevation.dgn

TWM ENGINEERING GEOSPATIAL SERVICES
TWM, INC.
WWW.TWM-INC.COM
IL DESIGN FIRM LICENSE NO: 184-001220

USER NAME = ckoltveit	DESIGNED - NP	REVISED -
	CHECKED - ALN	REVISED -
PLOT SCALE = 0:2.0000 ':" / in.	DRAWN - NP	REVISED -
PLOT DATE = 12/1/2020	CHECKED - ALN	REVISED -

STATE OF ILLINOIS
DEPARTMENT OF TRANSPORTATION

EXISTING PLAN AND ELEVATION
SN 090-0077
SHEET 16 OF 29 SHEETS

F.A.I. RTE.	SECTION	COUNTY	TOTAL SHEETS	SHEET NO.
74	90-15(HB(1-4);VB;B)BP,BJR,BRR	TAZEWELL	192	166
		CONTRACT NO. 68F54		
	ILLINOIS	FED. AID PROJECT		

STATE OF ILLINOIS
DEPARTMENT OF TRANSPORTATION

ROUTE NO.	SECTION	COUNTY	TOTAL SHEETS	SHEET NO.
F.A.I. 74	(90-15HB) -4(1)	TAZEWELL	18	13
FED. ROAD DIST. NO. 7	ILLINOIS	FED. AID PROJECT-		

SHEET NO. 4
13 SHEETS

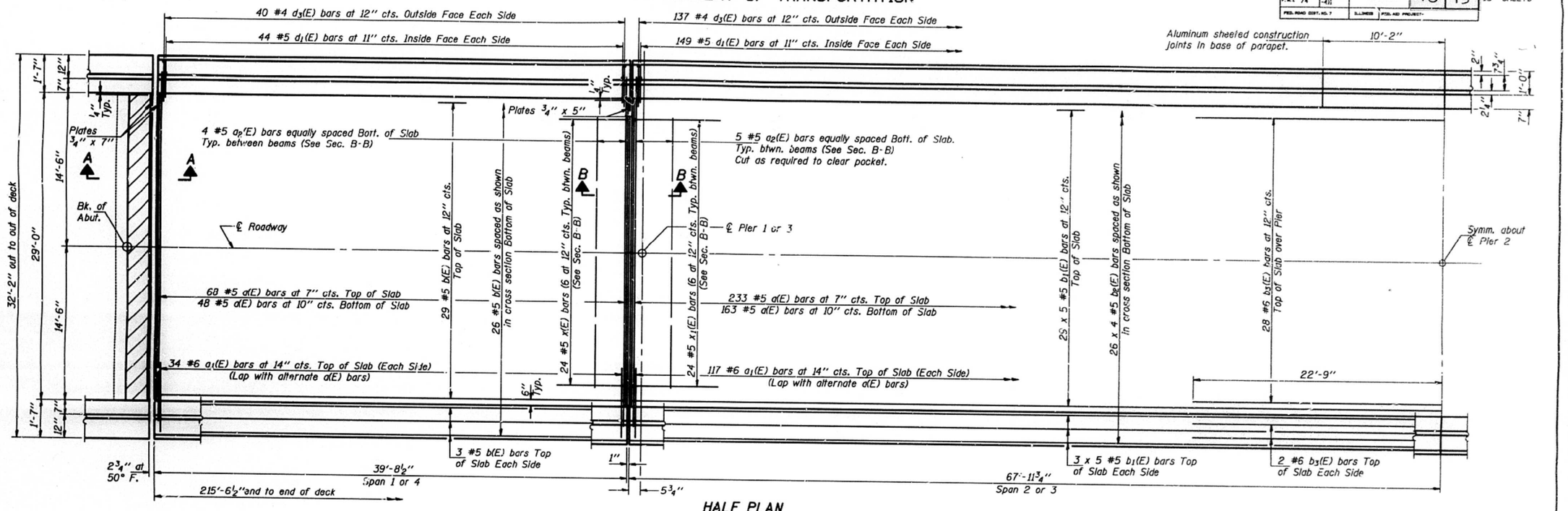

HALF PLAN

FOR INFORMATION ONLY

MIN. BAR LAPS
#5 bars = 1'-8"

Notes: See Sheet 5 & 6 of 13 for superstructure details and Bill of Material.
Reinforcement bars designated (E) shall be epoxy coated.
Bars indicated thus 29 x 5-#5 etc. indicates 29 lines of bars with 5 lengths per line.
See Sheet 5 of 13 for parapet reinforcement.
Hatched area to be poured after superstructure forms have been removed.

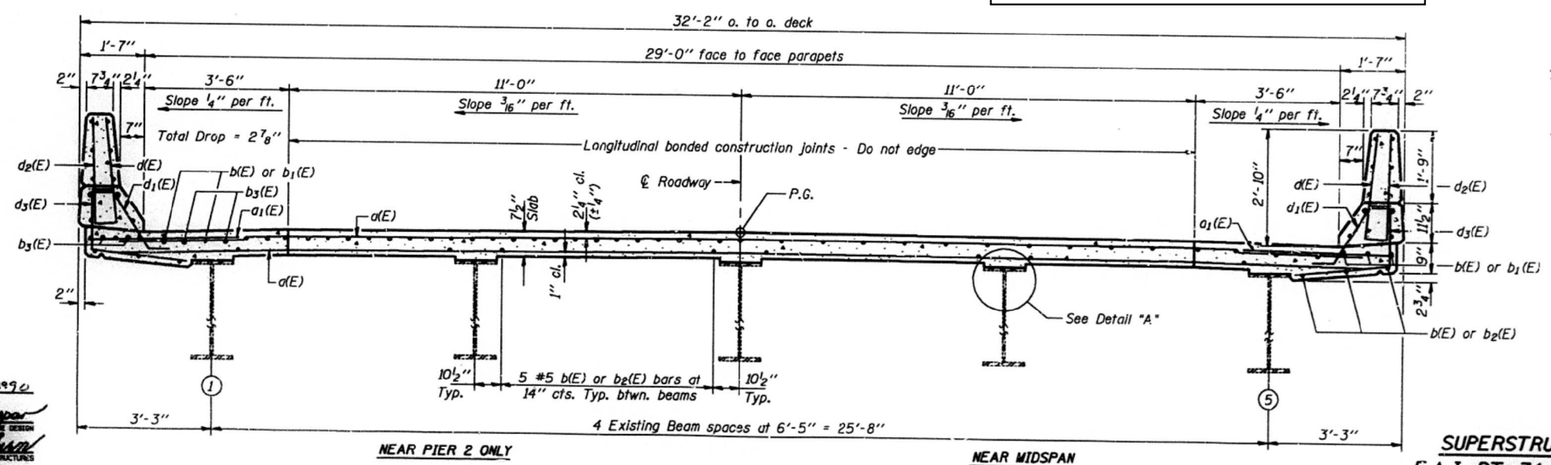

NEAR PIER 2 ONLY

NEAR MIDSPAN

CROSS SECTION
(Looking North)

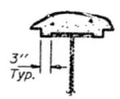

DETAIL "A"
Typ. fillet for Spans 1 and 4

DESIGNED	Paul P. Ramsey
CHECKED	MICHAEL ABITCHAN
DRAWN	Joe Sutherland
CHECKED	TPN MGA

S-1-0 12-31-87

Jan 3 1990
EXAMINED Greg J. Harper ENGINEER OF BRIDGE DESIGN
PASSED James T. Fahrney ENGINEER OF BRIDGE AND STRUCTURES
APPROVED DIRECTOR OF HIGHWAYS

SUPERSTRUCTURE DETAILS
F.A.I. RT. 74 SEC. (90-15HB-4)1
TAZEWELL COUNTY
STATION 922+60.73

MODEL: Default
FILE NAME: P:\2019\190388\W06 I-74 Bridge PSEs\4 CADD - DWG\4.4 Struc\0900077\0900077-68F54-017 Existing Superstructure Details.dgn

TWM ENGINEERING GEOSPATIAL SERVICES
TWM, INC.
WWW.TWM-INC.COM
IL DESIGN FIRM LICENSE NO: 184-001220

USER NAME = ckoltveit	DESIGNED - NP	REVISED -	
	CHECKED - ALN	REVISED -	
PLOT SCALE = 0:2.0000 ':' / in.	DRAWN - NP	REVISED -	
PLOT DATE = 12/1/2020	CHECKED - ALN	REVISED -	

STATE OF ILLINOIS
DEPARTMENT OF TRANSPORTATION

EXISTING SUPERSTRUCTURE DETAILS
SN 090-0077
SHEET 17 OF 29 SHEETS

F.A.I. RTE.	SECTION	COUNTY	TOTAL SHEETS	SHEET NO.
74	90-15[HB(1-4);VB;B]BP,BJR,BRR	TAZEWELL	192	167
		CONTRACT NO. 68F54		
	ILLINOIS	FED. AID PROJECT		

STATE OF ILLINOIS
DEPARTMENT OF TRANSPORTATION

ROUTE NO.	SECTION	COUNTY	TOTAL SHEETS	SHEET NO.
F.A.I. 74	(90-15HB) -4)I	TAZEWELL	18	14

SHEET NO. 5
13 SHEETS

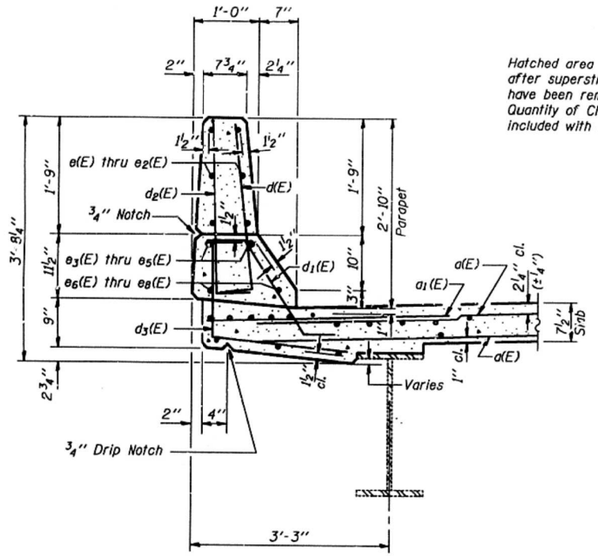

SECTION THRU PARAPET

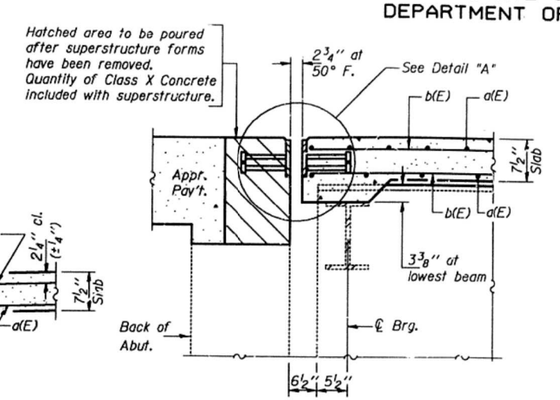

SECTION A-A
Typ. Both Abutments

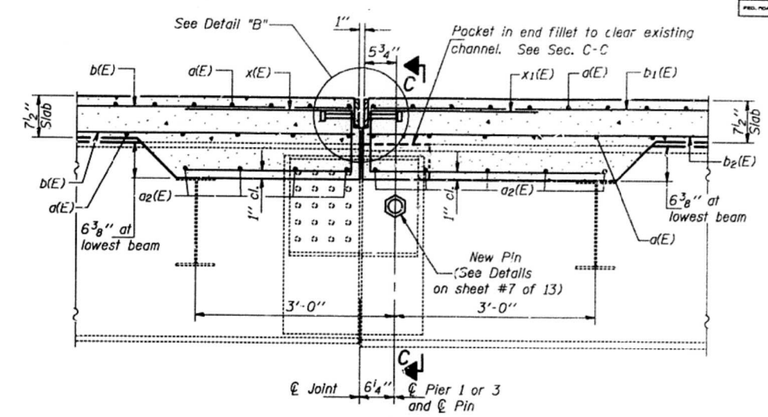

SECTION B-B
Pier 1 Looking West
Pier 3 Looking East

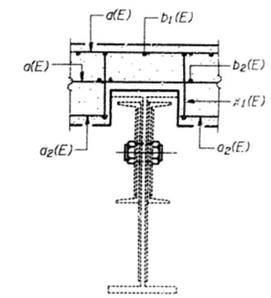

SECTION C-C

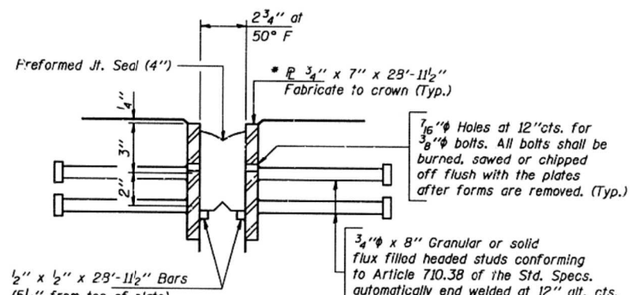

DETAIL "A"

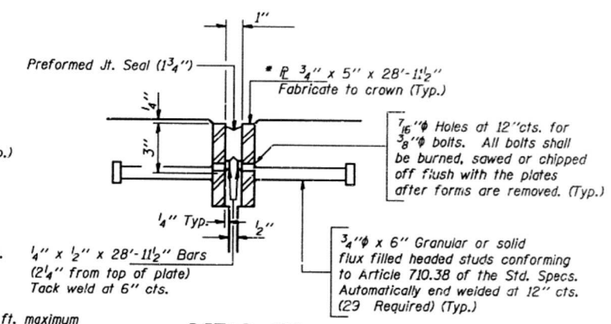

DETAIL "B"

* Furnish in segments of 20 ft. maximum length. Maximum space between installed segments shall be $\frac{3}{16}$". Seal space with Silicone Sealant suitable for Structural Steel.
After fabrication all surfaces of the steel plates shall be given one shop coat of paint specified for Structural Steel.

Notes: Reinforcement bars designated (E) shall be epoxy coated.
Work this sheet with sheet 4 of 13.

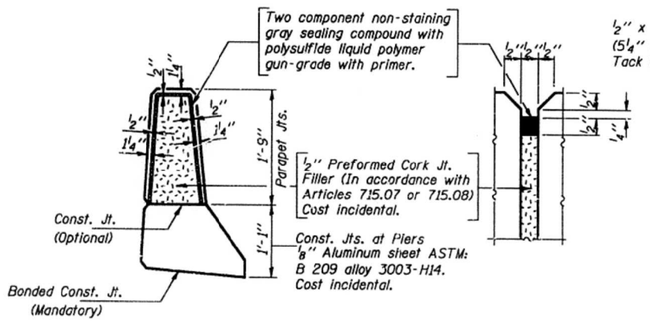

PARAPET JOINT DETAILS

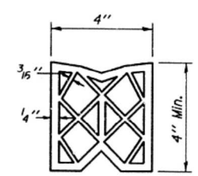

PREFORMED JOINT SEAL (4")

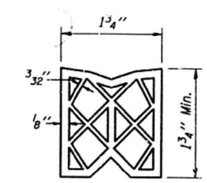

PREFORMED JOINT SEAL ($1\frac{3}{4}$")

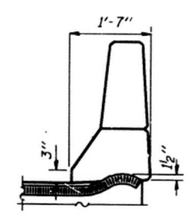

END TREATMENT
Typ. for 4" and $1\frac{3}{4}$" P.J.S.

FOR INFORMATION ONLY

DESIGNED	Robert Moody	
CHECKED	MICHAEL ARLINGHAUS	
DRAWN	Joe Sutherland	
CHECKED	TFH	M.A.

Jan 3 1990
EXAMINED Greg L. Kasper — ENGINEER OF BRIDGE DESIGN
PASSED James T. Popham — ENGINEER OF BRIDGE AND STRUCTURES
APPROVED — DIRECTOR OF HIGHWAYS

S-1-D 12-31-87

SUPERSTRUCTURE DETAILS
F.A.I. RT. 74 SEC. (90-15HB-4)I
TAZEWELL COUNTY
STATION 922+60.73

STATE OF ILLINOIS
DEPARTMENT OF TRANSPORTATION

ROUTE NO.	SECTION	COUNTY	TOTAL SHEETS	SHEET NO.
F.A.I. 74	(90-15HB -4)I	TAZEWELL	18	15

SHEET NO. 6
13 SHEETS

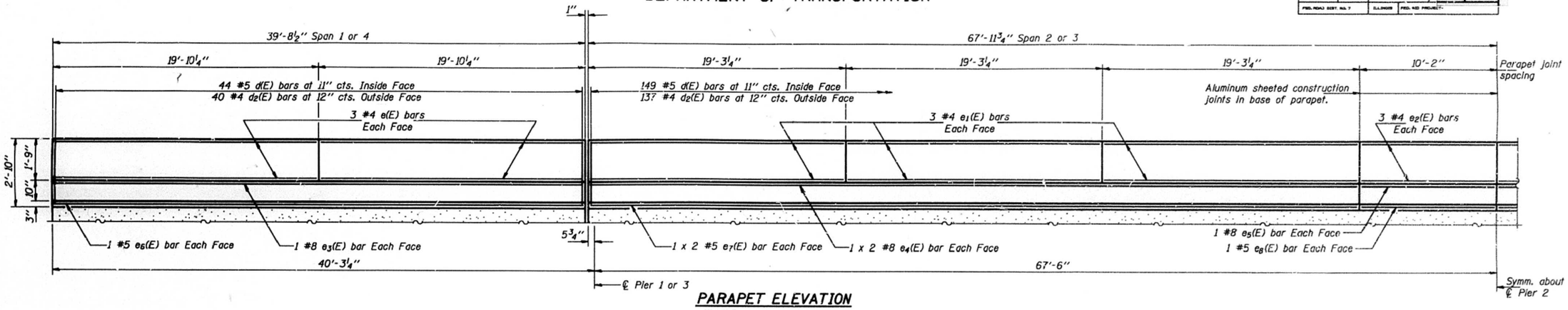

PARAPET ELEVATION

West Parapet Looking West
East Parapet Looking East

MIN. BAR LAPS

#5 bars = 2'-2"
#8 bars = 4'-6"

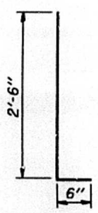

BARS d(E) & d2(E)

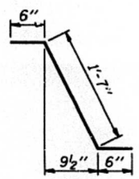

BAR d1(E)

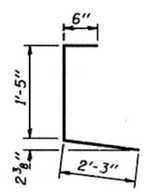

BAR d3(E)

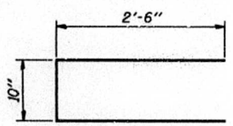

BAR x(E)

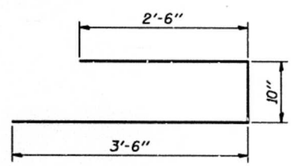

BAR x1(E)

SUPERSTRUCTURE BILL OF MATERIAL

Bar	No.	Size	Length	Shape
d(E)	628	#5	30'-0"	
d1(E)	370	#6	4'-0"	
d2(E)	72	#5	6'-0"	
b(E)	122	#5	39'-5"	
b1(E)	175	#5	28'-6"	
b2(E)	104	#5	35'-2"	
b3(E)	32	#6	45'-6"	
d(E)	474	#5	3'-0"	
d1(E)	474	#5	2'-7"	
d2(E)	434	#4	3'-0"	
d3(F)	434	#4	4'-2"	
e(E)	48	#4	19'-7"	
e1(E)	72	#4	19'-0"	
e2(E)	24	#4	9'-11"	
e3(E)	8	#8	39'-5"	
e4(E)	16	#8	31'-2"	
e5(E)	8	#8	9'-11"	
e6(E)	8	#5	39'-5"	
e7(E)	16	#5	29'-11"	
e8(E)	8	#5	9'-11"	
x(E)	48	#5	5'-10"	
x1(E)	48	#5	6'-10"	
Reinforcement Bars (Epoxy Coated)			Pound	49010
Class X Concrete Superstructure			Cu. Yd.	232.5

Notes: Reinforcement bars designated (E) shall be epoxy coated.
Bars indicated thus 1 x 2-#5 etc. indicates 1 line of bars with 2 lengths per line.

FOR INFORMATION ONLY

DESIGNED Ed P. Powely
CHECKED MICHAEL ABITOGUN
DRAWN Joe Sutherland
CHECKED TPN NSA

Jan 3 1990
EXAMINED Raj. D. Kapur ENGINEER OF DESIGN
PASSED James T. Gahan ENGINEER OF BRIDGES AND STRUCTURES
APPROVED DIRECTOR OF HIGHWAYS

SUPERSTRUCTURE DETAILS
F.A.I. RT. 74 SEC. (90-15HB-4)I
TAZEWELL COUNTY
STATION 922+60.73

MODEL: Default
FILE NAME: P:\2019\190388\WO6 I-74 Bridge PSES\4 CADD - DWG\4.4 Struc\0900077\0900077-68F54-019 Existing Superstructure Details.dgn

TWM ENGINEERING GEOSPATIAL SERVICES
TWM, INC. WWW.TWM-INC.COM
IL DESIGN FIRM LICENSE NO: 184-001220

USER NAME = ckoltveit	DESIGNED - NP	REVISED -
	CHECKED - ALN	REVISED -
PLOT SCALE = 0:2.0000 ':' / in.	DRAWN - NP	REVISED -
PLOT DATE = 12/1/2020	CHECKED - ALN	REVISED -

STATE OF ILLINOIS
DEPARTMENT OF TRANSPORTATION

EXISTING SUPERSTRUCTURE DETAILS
SN 090-0077
SHEET 19 OF 29 SHEETS

F.A.I. RTE.	SECTION	COUNTY	TOTAL SHEETS	SHEET NO.
74	90-15[HB(1-4);VB;B]BP,BJR,BRR	TAZEWELL	192	169

CONTRACT NO. 68F54
ILLINOIS FED. AID PROJECT

STATE OF ILLINOIS
DEPARTMENT OF PUBLIC WORKS & BUILDINGS
DIVISION OF HIGHWAYS

ROUTE No.	SEC.	COUNTY	TOTAL SHEETS	SHEET NO.
F.A.I. 5	90-15 HB-4	TAZEWELL	25	11
FED. ROAD DIST. No. 7	ILLINOIS	PROJECT		

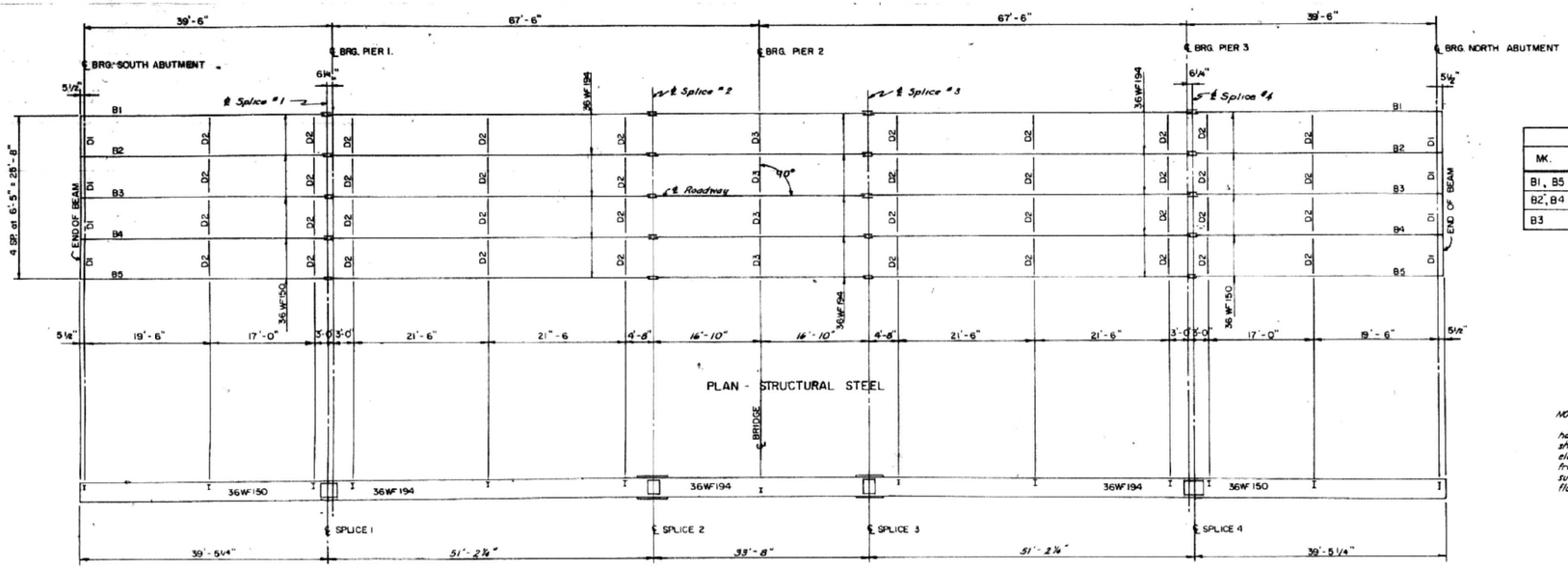

BEAM ELEVATION

PLAN - STRUCTURAL STEEL

ELEVATIONS AT TOP OF BEAMS						
MK.	℄ BEARING SOUTH ABUT.	℄ SPLICE 1	℄ SPLICE 2	℄ SPLICE 3	℄ SPLICE 4	℄ BEARING NORTH ABUT.
B1, B5	745.82	746.25	746.50	746.49	746.27	745.87
B2, B4	745.92	746.35	746.60	746.59	746.37	745.97
B3	745.95	746.38	746.63	746.62	746.40	746.00

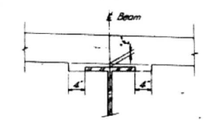

NOTE:
TO DETERMINE FILLET HEIGHT "t", after all structural steel has been erected, elevations of the top flanges of the beams shall be taken at intervals not to exceed 10 ft. from these elevations subtract the increment of deflection determined from the D.L. deflection diagram. The elevations so attained, subtracted from the theoretical grade elevations, minus the floor thickness equals "t".

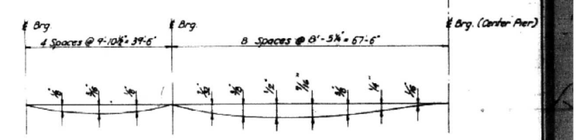

DEAD LOAD DEFLECTION DIAGRAM

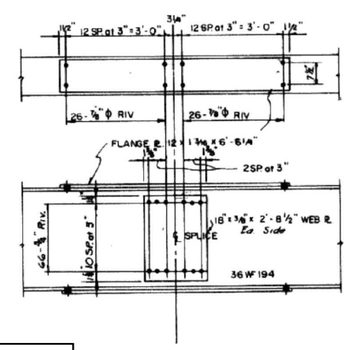

SPLICE 2 & 3

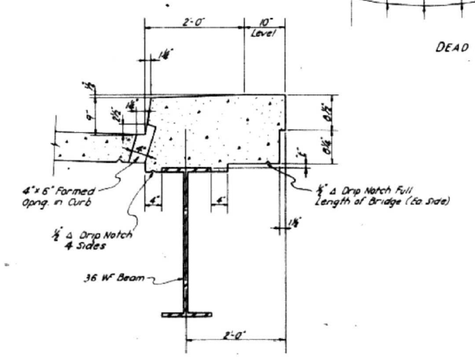

CURB AND FLOOR DRAIN DETAILS

DESIGNED	H. E. K.
CHECKED	R. D.
DRAWN	J. T.
CHECKED	H. Y. F.

EXAMINED _____ ENGINEER OF BRIDGES AND TRAFFIC STRUCTURES
PASSED _____ ENGINEER OF DESIGN
APPROVED _____ CHIEF HIGHWAY ENGINEER

FOR INFORMATION ONLY

STRUCTURAL STEEL DETAILS
F.A.I. ROUTE 5 - SECTION 90-15HB4

S.A. ROUTE 6 OVER F.A.I. ROUTE 5
STATION 922+60.73
TAZEWELL COUNTY

WARREN AND VAN PRAAG, INC.
CONSULTING ENGINEERS - DECATUR, ILLINOIS

MODEL: Default
FILE NAME: P:\2019\190380\W06 I-74 Bridge PSES\4 CADD - DWG\4.4 Struc\0090077\0090077-68F54-020-Existing Structural Steel Details.dgn

TWM ENGINEERING GEOSPATIAL SERVICES	TWM, INC. WWW.TWM-INC.COM	USER NAME = ckoltveit	DESIGNED - NP	REVISED -
	IL DESIGN FIRM LICENSE NO: 184-001220		CHECKED - ALN	REVISED -
		PLOT SCALE = 0:2.0000 ':' / in.	DRAWN - NP	REVISED -
		PLOT DATE = 12/1/2020	CHECKED - ALN	REVISED -

STATE OF ILLINOIS
DEPARTMENT OF TRANSPORTATION

EXISTING STRUCTURAL STEEL DETAILS
SN 090-0077
SHEET 20 OF 29 SHEETS

F.A.I. RTE.	SECTION	COUNTY	TOTAL SHEETS	SHEET NO.
74	90-15(HB(1-4);VB;B)BP,BJR,BRR	TAZEWELL	192	170
		CONTRACT NO. 68F54		
		ILLINOIS	FED. AID PROJECT	

STATE OF ILLINOIS
DEPARTMENT OF PUBLIC WORKS & BUILDINGS
DIVISION OF HIGHWAYS

ROUTE No.	SEC.	COUNTY	TOTAL SHEETS	SHEET No.
F.A.I. 5	90-15 HB-4	TAZEWELL	25	12
FED. ROAD DIST. No. 7	ILLINOIS	PROJECT		

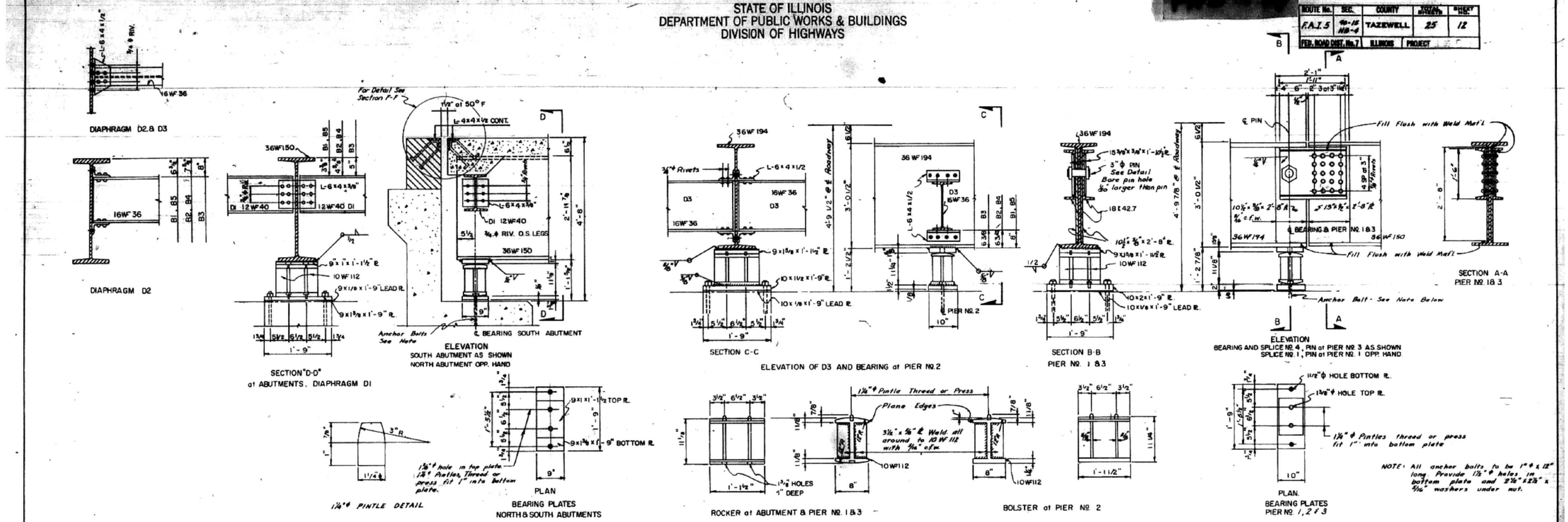

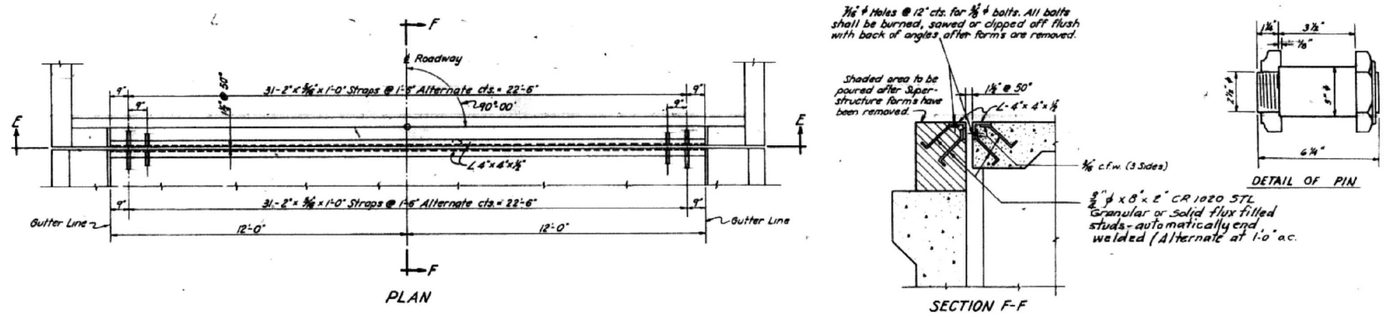

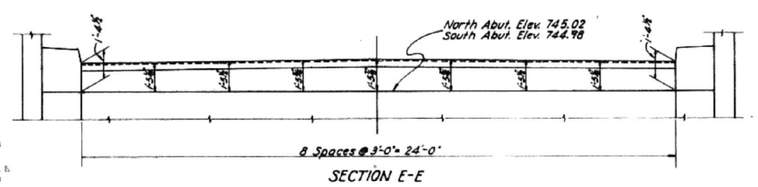

DESIGNED	H. E. K.
CHECKED	R. D.
DRAWN	J. T.
CHECKED	H. Y. F.

EXAMINED _____ ENGINEER OF BRIDGES AND TRAFFIC STRUCTURES
PASSED _____ ENGINEER OF DESIGN
APPROVED _____ CHIEF HIGHWAY ENGINEER

FOR INFORMATION ONLY

STRUCTURAL STEEL DETAILS
F.A.I. ROUTE 5 - SECTION 90-15HB4

S.A. ROUTE 6 OVER F.A.I. ROUTE 5
STATION 922+60.73
TAZEWELL COUNTY

WARREN AND VAN PRAAG, INC.
CONSULTING ENGINEERS · DECATUR, ILLINOIS

MODEL: Default
FILE NAME: P:\2019\190388\WO6 I-74 Bridge PSEs\4 CADD - DWG\4.4 Struc\0900077\0900077-68F54-021 Existing Structural Steel Details.dgn

TWM ENGINEERING GEOSPATIAL SERVICES
TWM, INC. WWW.TWM-INC.COM
IL DESIGN FIRM LICENSE NO: 184-001220

USER NAME = ckoltveit	DESIGNED - NP	REVISED -	
	CHECKED - ALN	REVISED -	
PLOT SCALE = 0:2.0000 ':" / in.	DRAWN - NP	REVISED -	
PLOT DATE = 12/1/2020	CHECKED - ALN	REVISED -	

STATE OF ILLINOIS
DEPARTMENT OF TRANSPORTATION

EXISTING STRUCTURAL STEEL DETAILS
SN 090-0077
SHEET 21 OF 29 SHEETS

F.A.I. RTE.	SECTION	COUNTY	TOTAL SHEETS	SHEET NO.
74	90-15(HB(1-4);VB;B)BP,BJR,BRR	TAZEWELL	192	171
		CONTRACT NO. 68F54		
	ILLINOIS	FED. AID PROJECT		

STATE OF ILLINOIS
DEPARTMENT OF TRANSPORTATION

FAI 74	8	TAZEWELL	15	8	SHEET NO. 1 / 4 SHEETS

NOTE:
EXISTING RIVET SIZE WAS 7/8" WHICH REQUIRED 7/8" DIA. LINK PLATE BOLTS TO BE USED.

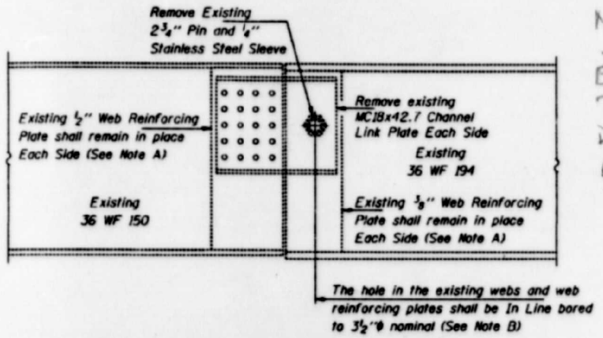

ELEVATION AT EXISTING PIN ASSEMBLY

Any Pins that can be easily removed without damage to the pin shall be salvaged and the Bridge Engineer shall be contacted for disposition. Cost of salvage is included in "Pin and Link Plate Replacement".

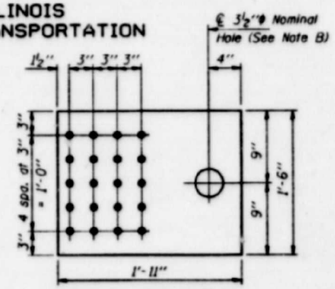

LINK PLATE DETAIL
(20 Required)

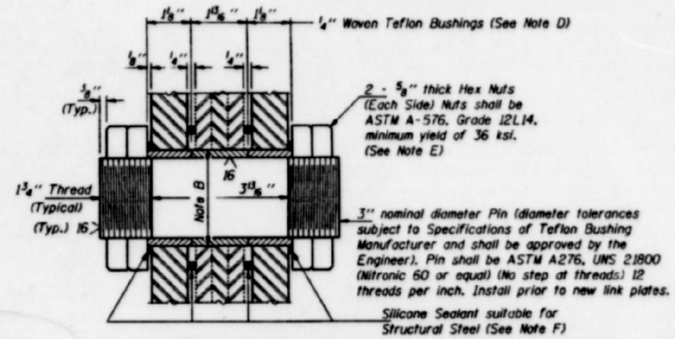

SECTION THRU PIN
(10 Required)

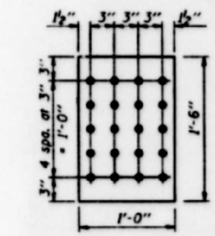

FILL PLATE DETAIL
(20 Required)

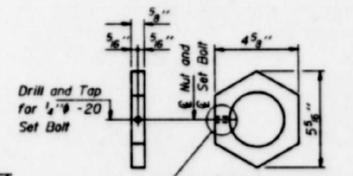

EXTERIOR NUT DETAIL
(20 Required)

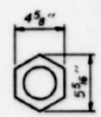

INTERIOR NUT DETAIL
(20 Required)

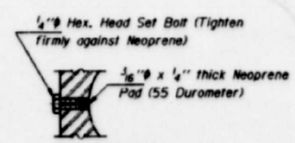

DETAIL A

Set Bolts shall conform to the requirements of ASTM A 307 and shall be galvanized according to AASHTO M 232.

If the existing deck interferes with the new link plates, concrete shall be removed to provide clearance for the new pins and link plates. Cost shall be included in the cost of "Pin and Link Plate Replacement".

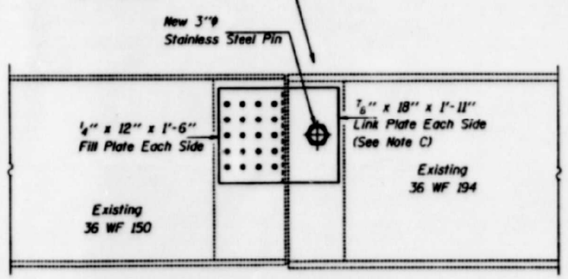

ELEVATION AT NEW PIN ASSEMBLY

Note A:
Existing welds shall be inspected for cracks using liquid dye penetrant or magnetic particle testing. Any cracks that are found shall be identified and reported to the Bureau of Bridges and Structures for further disposition. Clean and paint before installing new link plates.

Note B:
Bore diameter for bushing in link plate, existing webs and web reinforcement plates shall correspond to bushing manufacturer's allowable tolerances for proper functioning. Hole diameter may be adjusted to allow use of stock bushings.

Note C:
Inside face of new link plates shall receive first field coat in shop. The primer shall pass the M.E.K. Rub Test before the first field coat is applied.

Note D:
Actual bushing thickness per manufacturer's specifications. 1/4" is approximate. Bushings shall be a self lubricating filament wound epoxy matrix backed Duralon Bearing, metal backed Fiber Glide Bearing or equivalent. No primer or grease shall be allowed on bushings. Bushings shall be suitable for dynamic loads of 20,000 psi.

Note E:
Tighten inside nuts to bring all bushings into firm contact, then back off 1/4 turn and tighten outer nuts and set bolts.

Note F:
Apply 3/8" bead to face of the web reinforcing plates approximately 1/2" from bushing immediately before installing new link plates. Place sealant around nuts after installation. Sealant shall be suitable for prolonged exterior exposure without losing flexibility or adhesion to painted steel surfaces. Proposed products shall be subject to Department's acceptance based on documented testing or other evidence.

GENERAL NOTES

All new structural steel shall conform to AASHTO Classification M-270 Gr. 36, unless otherwise noted.

All new fasteners shall be high strength bolts. Holes shall be subpunched or subdrilled 5/16"Φ and reamed in the field to 13/16"Φ for 3/4"Φ high strength bolts (unless otherwise noted) after structural steel sections are properly fitted into position.

The Contractor shall provide support and/or shoring systems for the beam in the area of existing pin and link plate replacement. See Special Provision "Temporary Support System."

The inorganic zinc rich primer/acrylic/acrylic paint system shall be used for shop and field painting of new structural steel except where otherwise noted. The color of the acrylic finish coat shall be Gray, Munsell No. 5B 7/1. See Special Provisions "Cleaning and Painting New Metal Structures". Cost shall be included in the cost of "Pin and Link Plate Replacement".

Existing Structural steel shall be cleaned and painted as required by the Special Provision "Cleaning and Painting Adjacent Areas of Existing Steel Structures". Cost shall be included in the cost of "Pin and Link Plate Replacement."

All existing steel surfaces behind link plates shall be cleaned and primed before installation of new link plates. Cost shall be included in the cost of "Pin and Link Plate Replacement."

Plan dimensions and details relative to existing structure have been taken from existing plans and are subject to nominal construction variations. It shall be the Contractor's responsibility to verify such dimensions and details in the field, except the pin diameters, and make necessary approved adjustments prior to construction or ordering of materials. Such variations shall not be cause for additional compensation for a change in the scope of the work, however, the Contractor will be paid for the quantity actually furnished at the unit price bid for the work.

The Pins and Link Plates shall conform to the minimum Charpy V-Notch Toughness of 25 ft.-lbs. at 40° F.

The pins, link plates, bushings, nuts, Set Bolts, Neoprene Pad, silicone sealant fill plates and high strength bolts are the items included in "Pin and Link Plate Replacement".

The existing structural steel coating contains lead. The Contractor should take appropriate precautions to deal with the presence of lead on this project.

TOTAL BILL OF MATERIAL

ITEM	UNIT	QUANTITY
Temporary Support System	Each	10
Pin and Link Plate Replacement	Each	10

DESIGNED
CHECKED Kenneth P. Stanley
DRAWN Paul Summer
CHECKED KLS KPS

MAY 5, 1998
EXAMINED Fred E. Hahn — ENGINEER OF STRUCTURAL SERVICES
PASSED — ENGINEER OF BRIDGES AND STRUCTURES

MAXIMUM REACTIONS AT PIN

RB	(K)	22.0
RL	(K)	32.1
Imp.	(K)	9.6
R (Total)	(K)	63.7

FOR INFORMATION ONLY

PIN AND LINK PLATE REPLACEMENT
FAI ROUTE 74 SEC. 90-15HB-4
TAZEWELL COUNTY
STA. 922+60.73
STR. No. 090-0077

MODEL: Default
FILE NAME: P:\2019\190388\W06 I-74 Bridge PSEs\4 CADD - DWG\4.4 Struc\0900077\0900077-68F54-023-Existing Structural Steel Details.dgn

TWM ENGINEERING GEOSPATIAL SERVICES
TWM, INC. WWW.TWM-INC.COM
IL DESIGN FIRM LICENSE NO: 184-001220

USER NAME = ckoltveit	DESIGNED - NP	REVISED -	
	CHECKED - ALN	REVISED -	
PLOT SCALE = 0:2.0000 ':" / in.	DRAWN - NP	REVISED -	
PLOT DATE = 12/1/2020	CHECKED - ALN	REVISED -	

STATE OF ILLINOIS
DEPARTMENT OF TRANSPORTATION

EXISTING STRUCTURAL STEEL DETAILS
SN 090-0077
SHEET 23 OF 29 SHEETS

F.A.I. RTE.	SECTION	COUNTY	TOTAL SHEETS	SHEET NO.
74	90-15[HB(1-4);VB;B]BP,BJR,BRR	TAZEWELL	192	173
		CONTRACT NO. 68F54		
	ILLINOIS	FED. AID PROJECT		

STATE OF ILLINOIS
DEPARTMENT OF TRANSPORTATION

ROUTE NO.	SECTION	COUNTY	TOTAL SHEETS	SHEET NO.
S.B.I. F.A.I. 74	(90-15HB 1-4)I	TAZEWELL	18	16
PROJ. WORK SECT. NO. 7		ILLINOIS	FED. AID PROJECT-	

SHEET NO. 7
13 SHEETS

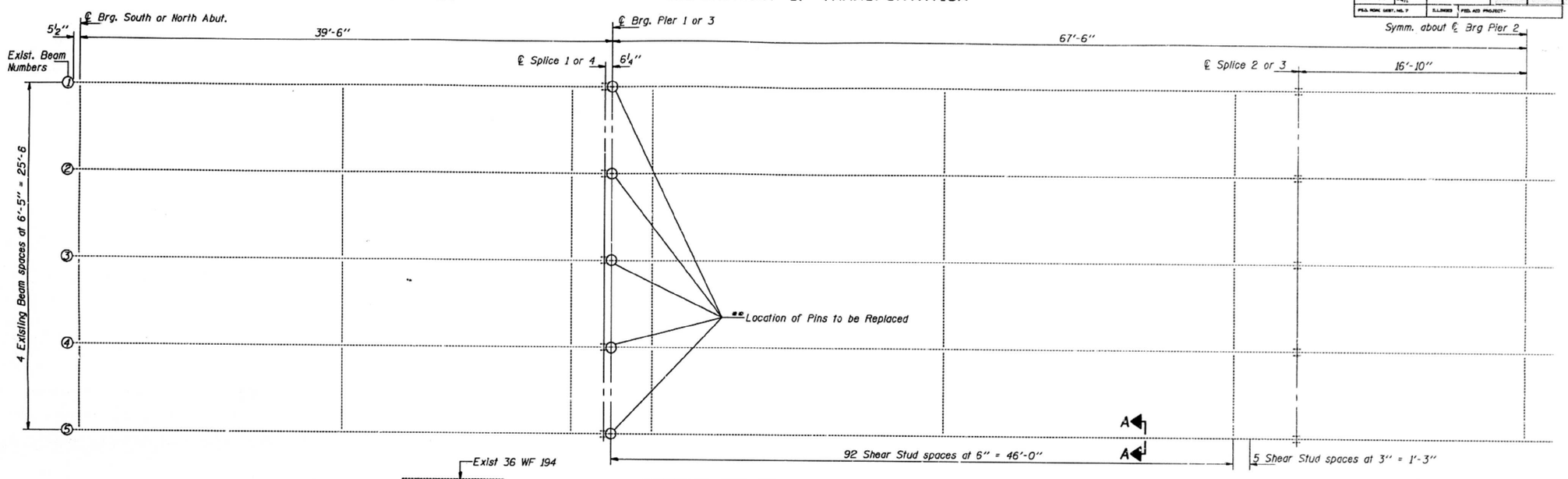

EXISTING STRUCTURAL STEEL PLAN

Showing location of new pins and shear studs.

** Temporary Support System is required for Pin Replacement. Cost Incidental to Pin Replacement.
Dead Load Reaction of Steel Beam from Span 1 or 4 at pin is 3600 ibs. for each beam.

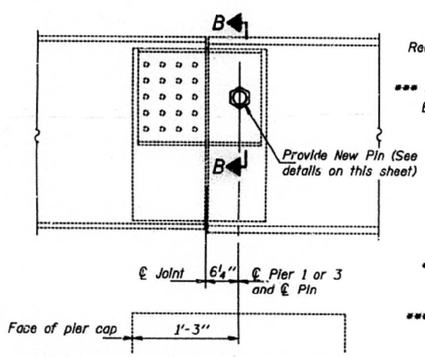

TYPICAL ELEVATION OF PIN REPLACEMENT

Pier 1 Looking West
Pier 3 Looking East

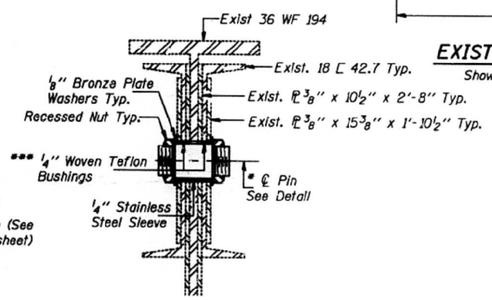

SECTION B-B

* Existing 3"φ+1/50" Pin Hole to be Bored to 3¼"φ+1/50" Hole. Cost of removing existing 3"φ pin and boring existing hole is incidental.

*** Self lubricating filament wound epoxy matrix backed Duralon bearing or metal backed Fiber Glide bearing or equivalent. Cost is incidental to Pin Replacement.

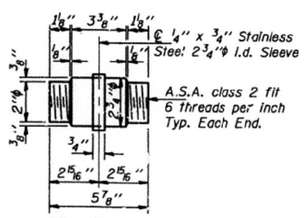

PIN DETAIL

Note: Use a case-hardened Pin. See Standard Specifications. Nuts shall be finger tightened and threads bured.

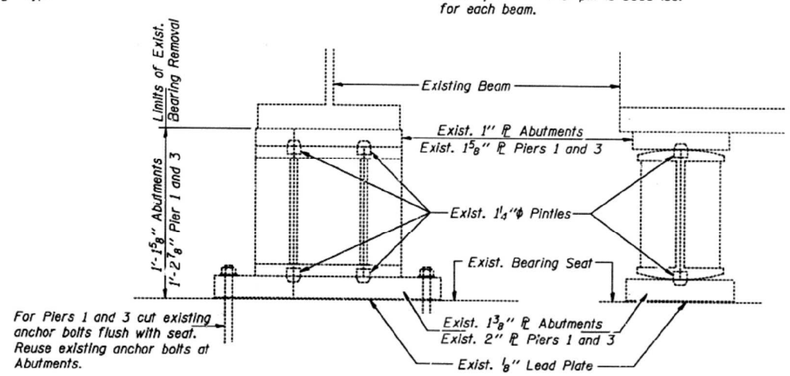

For Piers 1 and 3 cut existing anchor bolts flush with seat. Reuse existing anchor bolts at Abutments.

EXISTING BEARING REMOVAL DETAILS

Typ. for Abutments, Pier 1 and 3 except as noted.

No jacking shall be done until existing deck has been removed. Jack existing beams a maximum of ¼".

Dead Load Reaction of existing steel beams at each bearing location.
At Abutments = 3600 Lbs.
At Piers 1 and 3 = 9500 Lbs.

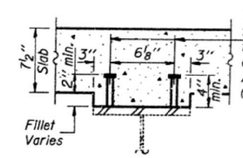

¾"φ Granular or solid flux filled headed studs, conforming to the requirements of Art. 710.38 of the Std. Specs. Automatically end welded to flange. (1960 Req'd.)

SECTION A-A

BILL OF MATERIAL

Item	Unit	Total
Pin Replacement	Each	10
Jack and Remove Existing Bearings	Each	20

FOR INFORMATION ONLY

DESIGNED	[signature]
CHECKED	MICHAEL ARTOWIN
DRAWN	Joe Sutherland
CHECKED	TPN NEA

Jan 3 1990
EXAMINED [signature] ENGINEER OF BRIDGE DESIGN
PASSED [signature] ENGINEER OF BRIDGES AND STRUCTURES
APPROVED DIRECTOR OF HIGHWAYS

STRUCTURAL STEEL DETAILS
F.A.I. RT. 74 SEC. (90-15HB-4)I
TAZEWELL COUNTY
STATION 922+60.73

MODEL: Default
FILE NAME: P:\2019\190388\W06 F-74 Bridge PSE\c4 CADD - DWG\L4 Struc\0900077\0900077-68F54-022 Existing Structural Steel Details.dgn

TWM ENGINEERING GEOSPATIAL SERVICES
TWM, INC. WWW.TWM-INC.COM
IL DESIGN FIRM LICENSE NO: 184-001220

USER NAME = ckoltveit	DESIGNED - NP	REVISED -	
	CHECKED - ALN	REVISED -	
PLOT SCALE = 0:2.0000 ':" / in.	DRAWN - NP	REVISED -	
PLOT DATE = 12/1/2020	CHECKED - ALN	REVISED -	

STATE OF ILLINOIS
DEPARTMENT OF TRANSPORTATION

EXISTING STRUCTURAL STEEL DETAILS
SN 090-0077
SHEET 22 OF 29 SHEETS

F.A.I. RTE.	SECTION	COUNTY	TOTAL SHEETS	SHEET NO.
74	90-15[HB(1-4);VB:B]BP,BJR,BRR	TAZEWELL	192	172
		CONTRACT NO. 68F54		
		ILLINOIS FED. AID PROJECT		

STATE OF ILLINOIS
DEPARTMENT OF TRANSPORTATION

ROUTE NO.	SECTION	COUNTY	TOTAL SHEETS	SHEET NO.
F.A.I. 74	(90-15HB -4)I	TAZEWELL	18	17

SHEET NO. 8
13 SHEETS

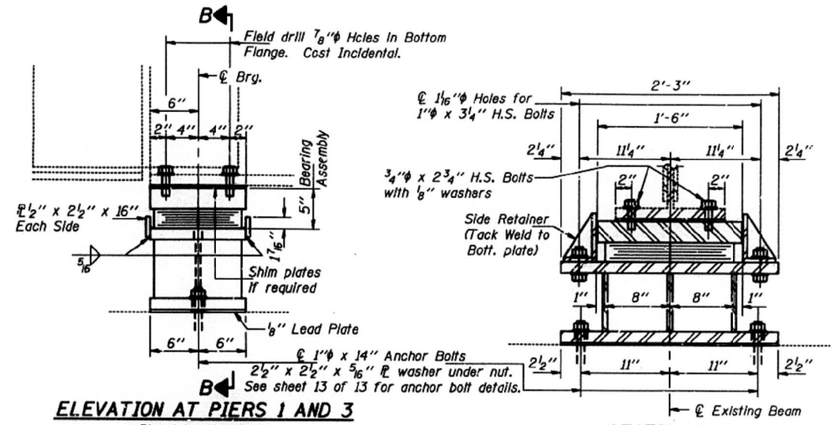

ELEVATION AT PIERS 1 AND 3
Pier 1 Looking West
Pier 3 Looking East

SECTION B-B

TYPE I ELASTOMERIC EXPANSION BEARING

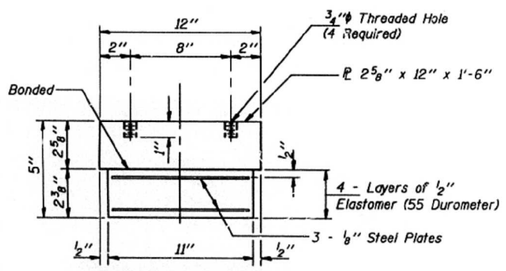

BEARING ASSEMBLY

Note: Shim plates shall not be placed under Bearing Assembly.

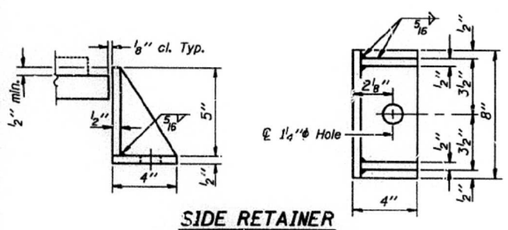

SIDE RETAINER

Equivalent rolled angle with stiffeners will be allowed in lieu of welded plates.

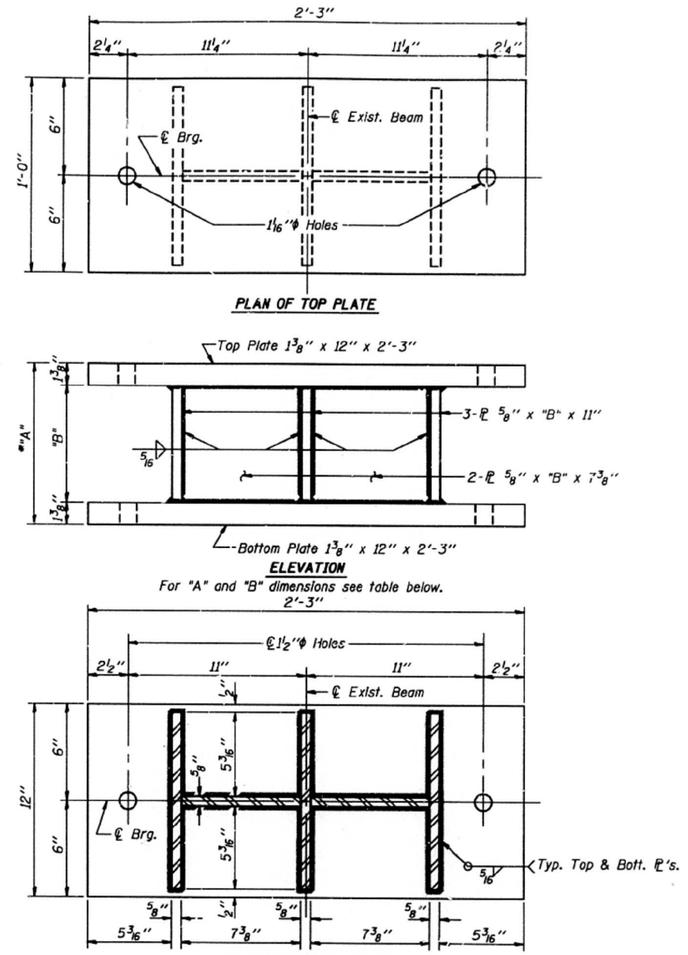

PIER BOLSTER DETAILS
Typ. for Piers 1 and 3.

INTERIOR GIRDER MOMENT TABLE			
		0.4 Sp. #2 or 0.6 Sp. #3	Pier 2
Is	(in4)	12100	12100
Ic	(in4)	27676	—
Ss	(in3)	664	664
Sc	(in3)	918	—
Z	(in3)	—	—
wℓ	(K/ft.)	.847	1.171
Mℓ	('K)	271	624
sℓ	(K/ft.)	0.324	—
Msℓ	('K)	121	—
Mℓ	('K)	466	265
M (Imp)	('K)	121	69.0
5/3(Mℓ+I)	('K)	978	557
Ma	('K)	1782	1495
Mu	('K)	3530	—
fsℓ non-comp	(k.s.i.)	4.9	11.3
fsℓ (comp)	(k.s.i.)	1.6	—
fs5/3(ℓ+I)	(k.s.i.)	12.8	10.1
fs (Overload)	(k.s.i.)	19.3	21.4
fs (Total)	(k.s.i.)	—	27.8
VR	(K)	146	—

INTERIOR GIRDER REACTION TABLE			
		Pier 1 & 3	Pier 2
Rℓ	(K)	30.8	99.4
Rℓ	(K)	35.7	45.2
Imp.	(K)	9.2	11.8
R (Total)	(K)	75.7	156.4

Is and Ss are the moment of inertia and section modulus of the steel section used in computing fs (Total & Overload).

Ic and Sc are the moment of inertia and section modulus of the composite section used in computing fs (Total & Overload).

VR is the maximum Live Load + Impact shear range in span.

Z is the plastic section modulus used to determine the fully plastic moments in the non-composite areas.

Ma (Applied Moment)=1.3[Mℓ + Msℓ + 5/3(Mℓ + I)].

Mu is the Full Plastic Moment Capacity for Compact, Braced section.

fs (Overload) is the sum of the stresses due to Mℓ + Msℓ + 5/3(Mℓ + I).

fs (Total) (Non-compact section) is the sum of the stresses due to 1.3[Mℓ + Msℓ + 5/3(Mℓ + I)].

TABLE FOR *"A" AND "B" DIMENSIONS

Location	Pier 1		Pier 3	
	"A"	"B"	"A"	"B"
Beam 1	10"	7 1/4"	10 3/8"	7 5/8"
Beam 2	10"	7 1/4"	10 1/2"	7 3/4"
Beam 3	10 1/2"	7 3/8"	10"	7 1/4"
Beam 4	10"	7 1/4"	10"	7 1/4"
Beam 5	10 1/2"	7 3/8"	10 3/8"	7 5/8"

* The contractor shall verify this dimension in the field before jacking the beams for bearing removal.

BILL OF MATERIAL

Item	Unit	Total
Elastomeric Bearing Assembly Type I	Each	10

FOR INFORMATION ONLY

DESIGNED	Rob P. Nowicki	EXAMINED	Jan 3 1990 Raj. D. Gupta CHIEF ENGINEER OF BRIDGE DESIGN
CHECKED	MICHAEL ALTUCHOW	PASSED	James T. Pulsen ENGINEER OF BRIDGES AND STRUCTURES
DRAWN	Joe Sutherland	APPROVED	DIRECTOR OF HIGHWAYS
CHECKED	TPN N.A.		

PIERS 1 AND 3 BEARING DETAILS
F.A.I. RT. 74 SEC. (90-15HB-4)I
TAZEWELL COUNTY
STATION 922+60.73

MODEL: Default
FILE NAME: P:\2019\190388\W06 I-74 Bridge PSEs\4 CADD - DWG\4.4 Struc\0900077\0900077-68F54-024 Existing Bearing Details.dgn

TWM ENGINEERING GEOSPATIAL SERVICES
TWM, INC. WWW.TWM-INC.COM
IL DESIGN FIRM LICENSE NO: 184-001220

USER NAME = ckoltveit	DESIGNED - NP	REVISED -	
	CHECKED - ALN	REVISED -	
PLOT SCALE = 0:2.0000 ':" / in.	DRAWN - NP	REVISED -	
PLOT DATE = 12/1/2020	CHECKED - ALN	REVISED -	

STATE OF ILLINOIS
DEPARTMENT OF TRANSPORTATION

EXISTING BEARING DETAILS
SN 090-0077
SHEET 24 OF 29 SHEETS

F.A.I. RTE.	SECTION	COUNTY	TOTAL SHEETS	SHEET NO.
74	90-15[HB(1-4);VB;B]BP,BJR,BRR	TAZEWELL	192	174

CONTRACT NO. 68F54
ILLINOIS FED. AID PROJECT

STATE OF ILLINOIS
DEPARTMENT OF TRANSPORTATION

ROUTE NO.	SECTION	COUNTY	TOTAL SHEETS	SHEET NO.
F.A.I. 74	(90-15HB) -4I	TAZEWELL	18	13

SHEET NO. 9
13 SHEETS

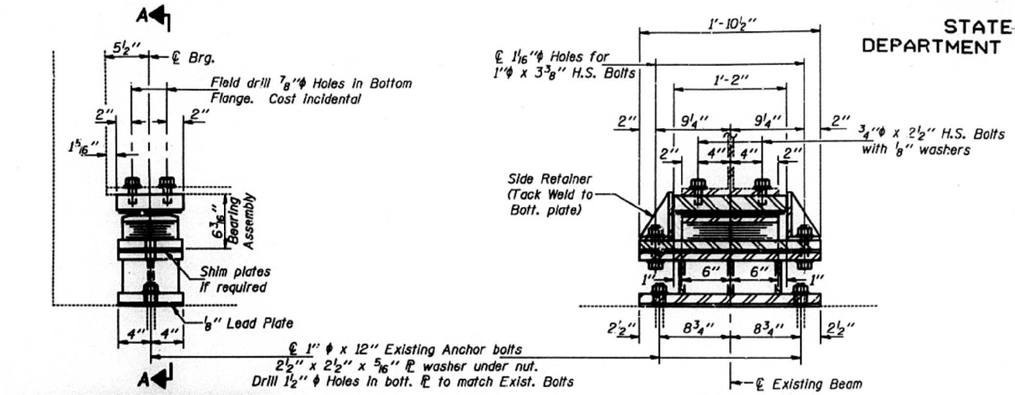

ELEVATION AT ABUTMENTS

South Abutment Looking West
North Abutment Looking East

SECTION A-A

TYPE II TFE ELASTOMERIC EXPANSION BEARING

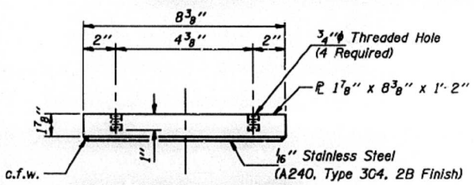

TOP BEARING ASSEMBLY

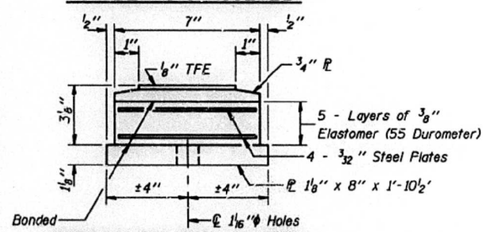

BOTTOM BEARING ASSEMBLY

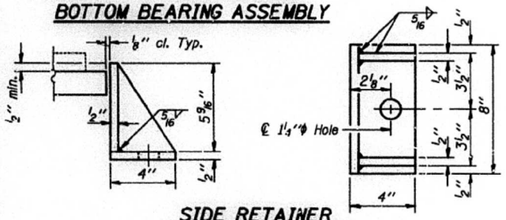

SIDE RETAINER

Equivalent rolled angle with stiffeners will be allowed in lieu of welded plates.

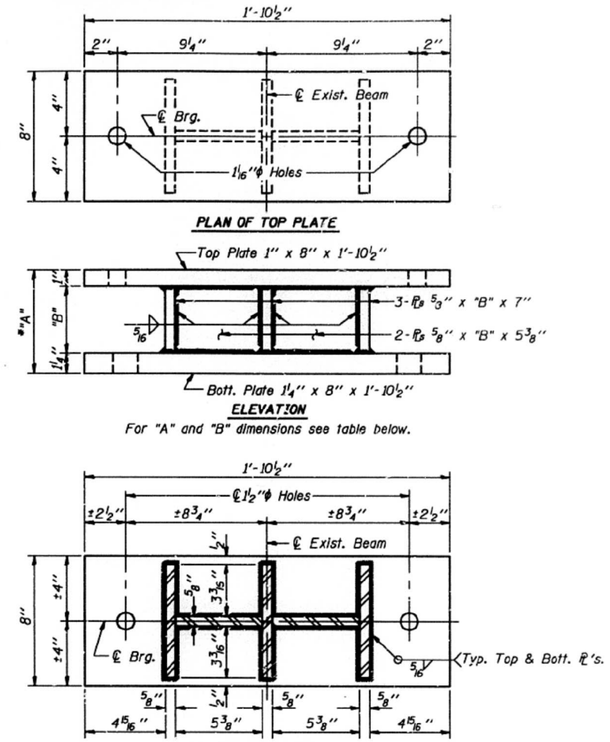

ABUTMENT BOLSTER DETAILS

Typ. for both abutments.

INTERIOR GIRDER MOMENT TABLE		Mid Span of Span 1 or 4
Is	(in⁴)	9040
Ic	(in⁴)	——
Ss	(in³)	504
Sc	(in³)	——
Z	(in³)	581
wℓ	(K/ft.)	1.116
MPℓ	('K)	218
sℓ	(K/ft.)	——
Msℓ	('K)	——
Mℓ	('K)	250
M (Imp)	('K)	75
5/3(Mℓ + I)	('K)	541
Ma	('K)	986
Mu	('K)	1598
fsℓ non-comp	(k.s.i.)	4.5
fsℓ (comp)	(k.s.i.)	——
fs 5/3 (ℓ + I)	(k.s.i.)	11.2
fs (Overload)	(k.s.i.)	15.7
fs (Total)	(k.s.i.)	——
VR	(K)	——

INTERIOR GIRDER REACTION TABLE		Abutments or at Pins
RP	(K)	22.1
Rℓ	(K)	32.1
Imp.	(K)	9.6
R (Total)	(K)	63.8

Is and Ss are the moment of inertia and section modulus of the steel section used in computing fs (Total & Overload).

Ic and Sc are the moment of inertia and section modulus of the composite section used in computing fs (Total & Overload).

VR is the maximum Live Load + Impact shear range in span.

Z is the plastic section modulus used to determine the fully plastic moments in the non-composite areas.

Ma (Applied Moment)=1.3[MP + Msℓ + 5/3(Mℓ + I)].

Mu is the Full Plastic Momant Capacity for Compact, Braced section.

fs (Overload) is the sum of the stresses due to MP + Msℓ + 5/3(Mℓ + I).

fs (Total) (Non-compact section) is the sum of the stresses due to 1.3[MP + Msℓ + 5/3(Mℓ + I)].

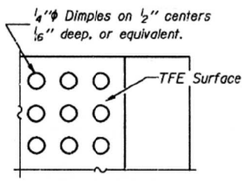

PLAN-TFE SURFACE

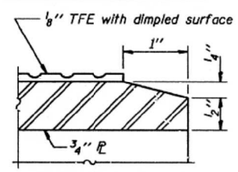

SECTION THRU TFE

Note: The ⅛" TFE sheet shall be bonded directly to the top steel plate with a two-component, medium viscosity epoxy resin, conforming to the requirements of the Federal Specification MMM-A-134, Type I. The bond agent shall be applied on the full area of the contact surfaces. Bonding of ⅛" TFE sheet during vulcanizing process will be permitted provided the process and method of adjusting assembly height is approved by the Engineer.

TABLE FOR *"A" AND "B" DIMENSIONS

Location	South Abutment "A"	South Abutment "B"	North Abutment "A"	North Abutment "B"
Beam 1	7 5/16"	5 5/16"	6¾"	4½"
Beam 2	7⅛"	4⅞"	6⅜"	4⅞"
Beam 3	7 3/16"	4 15/16"	6⅝"	4¼"
Beam 4	7⅛"	4⅞"	6⅜"	4⅞"
Beam 5	7 3/16"	4 15/16"	6¾"	4½"

* The contractor shall verify this dimension in the field before jacking the beams for bearing removal.

BILL OF MATERIAL

Item	Unit	Total
Elastomeric Bearing Assembly Type II	Each	10

FOR INFORMATION ONLY

DESIGNED
CHECKED MICHAEL ABATICHEN
DRAWN Joe Sutherland
CHECKED TRN MSA

Jan 3 1990
EXAMINED
PASSED
APPROVED
ENGINEER OF BRIDGE AND STRUCTURES
DIRECTOR OF HIGHWAYS

ABUTMENT BEARING DETAILS
F.A.I. RT. 74 SEC. (90-15HB-4)I
TAZEWELL COUNTY
STATION 922+60.73

MODEL: Default
FILE NAME: P:\2019\19038\WO6 I-74 Bridge PSES\4 CADD - DWG\4.4 Struc\0090077-68F54-025 Existing Bearing Details.dgn

TWM ENGINEERING GEOSPATIAL SERVICES
TWM, INC. WWW.TWM-INC.COM
IL DESIGN FIRM LICENSE NO: 184-001220

USER NAME = ckoltveit	DESIGNED - NP	REVISED -
	CHECKED - ALN	REVISED -
PLOT SCALE = 0:2.0000 ':' / in.	DRAWN - NP	REVISED -
PLOT DATE = 12/1/2020	CHECKED - ALN	REVISED -

STATE OF ILLINOIS
DEPARTMENT OF TRANSPORTATION

EXISTING BEARING DETAILS
SN 090-0077
SHEET 25 OF 29 SHEETS

F.A.I. RTE.	SECTION	COUNTY	TOTAL SHEETS	SHEET NO.
74	90-15(HB(1-4);VB;B)BP,BJR,BRR	TAZEWELL	192	175

CONTRACT NO. 68F54
ILLINOIS FED. AID PROJECT

ROUTE NO.	SECTION	COUNTY	TOTAL SHEETS	SHEET NO.	SHEET NO. 11
F.A.I. 74	(90-15HB -4)I	TAZEWELL	18	18B	13 SHEETS
FED. ROAD DIST. NO. 7		ILLINOIS	FED. AID PROJECT		

STATE OF ILLINOIS
DEPARTMENT OF TRANSPORTATION

* These elevations are given at front face of hatched block.

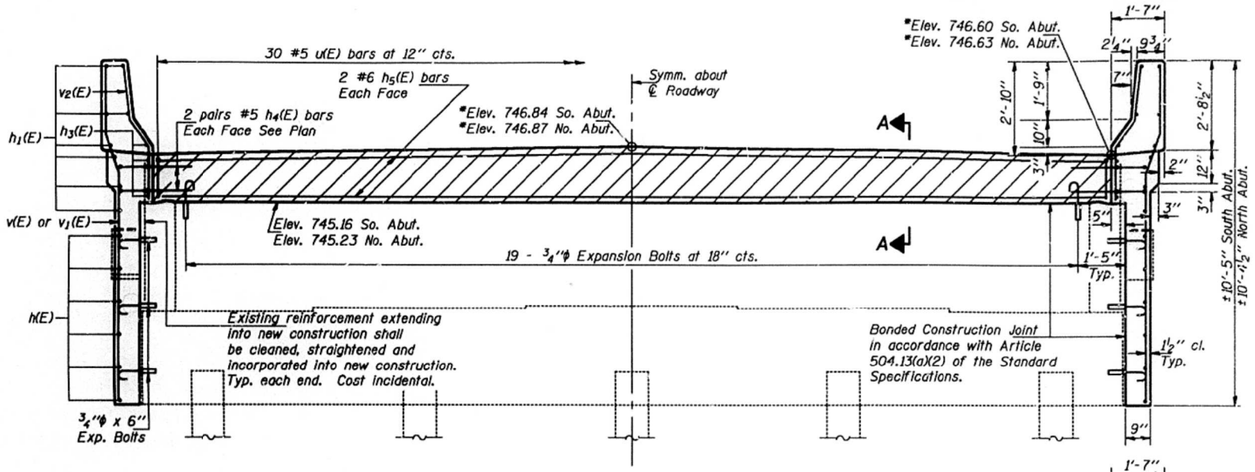

ELEVATION

South Abutment Looking South.
North Abutment Looking North.

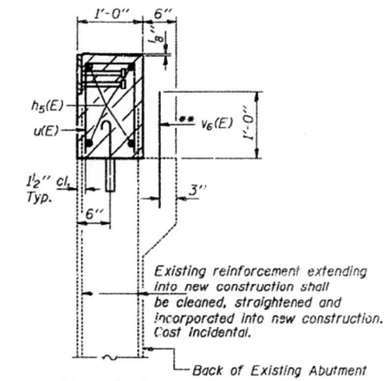

Sec. A-A

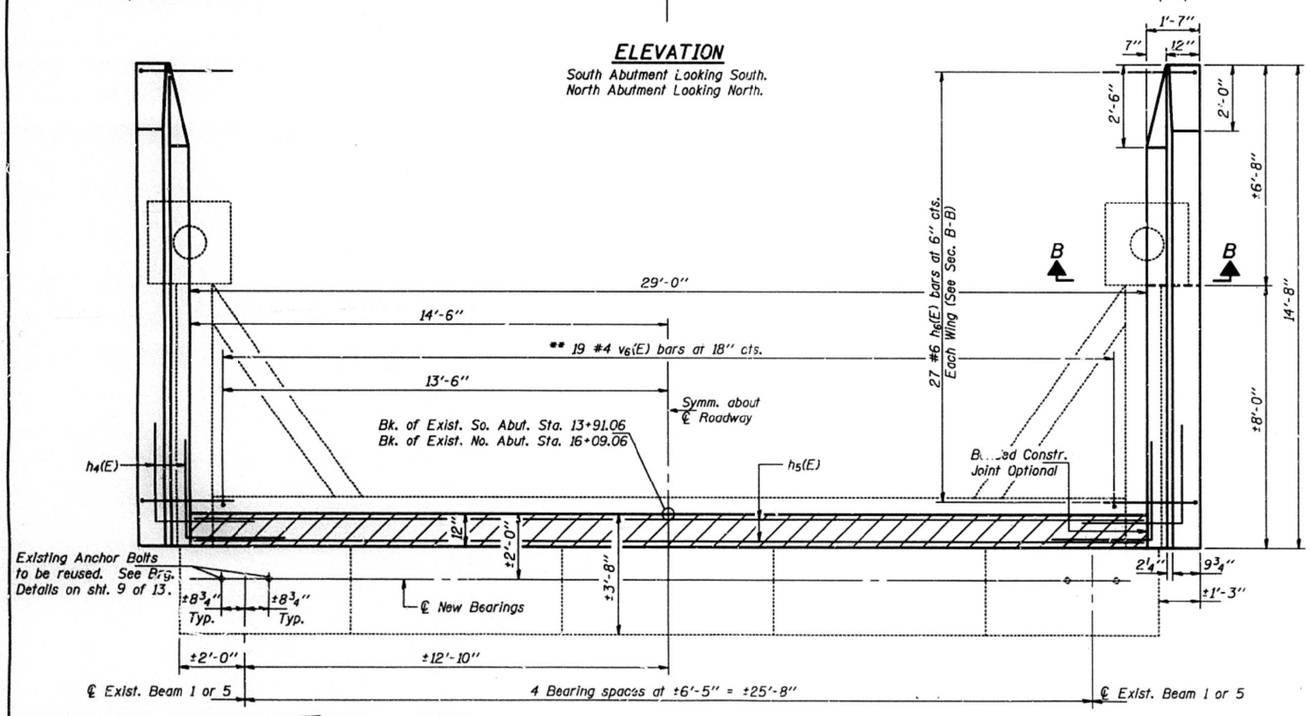

PLAN

Typical for North and South Abutments.

** Epoxy grout v6(E) bars in 3/4"φ x 9" minimum drilled holes. Cost incidental. See Special Provisions.

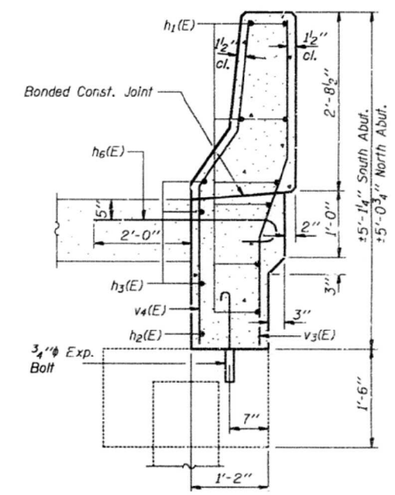

SEC. B-B

Notes: Hatched area to be poured after superstructure forms have been removed.
Reinforcement bars designated (E) shall be epoxy coated.
See sheet 12 of 13 for Wingwall Elevations, bar details and Bill of Material.
All exposed edges shall have standard ¾" chamfer except as noted.

DESIGNED	
CHECKED	MICHAEL APITSIGNIN
DRAWN	Joe Sutherland
CHECKED	TPN

Jan 3 1990
EXAMINED — ENGINEER OF ELECTRIC DESIGN
PASSED — ENGINEER OF BRIDGE AND STRUCTURES
APPROVED — DIRECTOR OF HIGHWAYS

FOR INFORMATION ONLY

ABUTMENTS
F.A.I. RT. 74 SEC. (90-15HB-4)I
TAZEWELL COUNTY
STATION 922+60.73

MODEL: Default
FILE NAME: P:\2019\1903BIWO6-I-74 Bridge PSEs\4 CADD - DWG\4.4 Struct\0900077-0900077-68F54-026 Existing Abutment Details.dgn

TWM ENGINEERING GEOSPATIAL SERVICES
TWM, INC. WWW.TWM-INC.COM
IL DESIGN FIRM LICENSE NO: 184-001220

USER NAME = ckoltveit	DESIGNED - NP	REVISED -	
	CHECKED - ALN	REVISED -	
PLOT SCALE = 0:2.0000 ':' / in.	DRAWN - NP	REVISED -	
PLOT DATE = 12/1/2020	CHECKED - ALN	REVISED -	

STATE OF ILLINOIS
DEPARTMENT OF TRANSPORTATION

EXISTING ABUTMENT DETAILS
SN 090-0077
SHEET 26 OF 29 SHEETS

F.A.I. RTE.	SECTION	COUNTY	TOTAL SHEETS	SHEET NO.
74	90-15[HB(1-4);VB;B]BP,BJR,BRR	TAZEWELL	192	176
		CONTRACT NO. 68F54		
		ILLINOIS	FED. AID PROJECT	

STATE OF ILLINOIS
DEPARTMENT OF TRANSPORTATION

ROUTE NO.	SECTION	COUNTY	TOTAL SHEETS	SHEET NO.
S.B.I. F.A.I. 74	(90-15HB -4)I	TAZEWELL	18	18C
FED. ROAD DIST. NO. 7	ILLINOIS	FED. AID PROJECT		

SHEET NO. 12
13 SHEETS

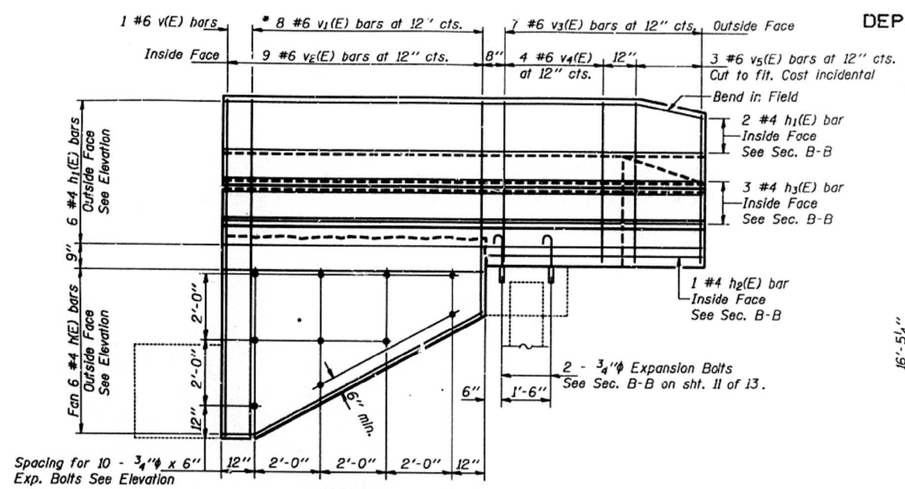

WINGWALL ELEVATION
Showing Reinforcement.
Typical for all wingwalls.

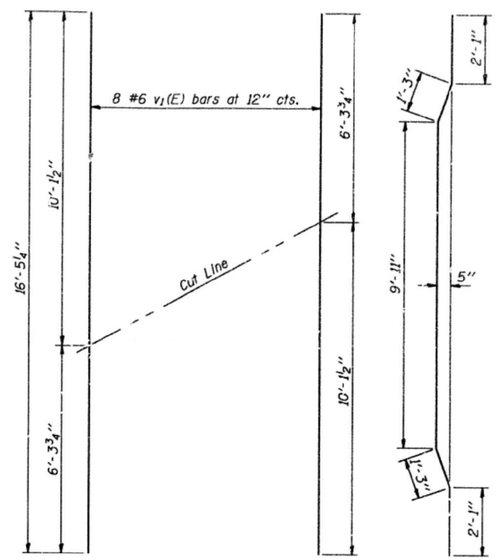

*** FIELD CUTTING DIAGRAM**
Order v1(E) bars full length. Cut to fit as shown and use remainder of bars in opposite wing.

*** BAR v1(E)**

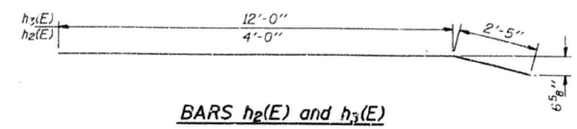

BARS h2(E) and h3(E)

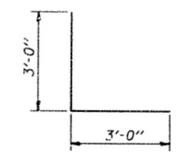

BAR h4(E)

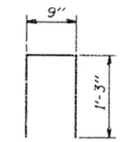

BAR u(E)

End Post shall be poured after bridge parapet is in place. Form top surface to match parapet grade.

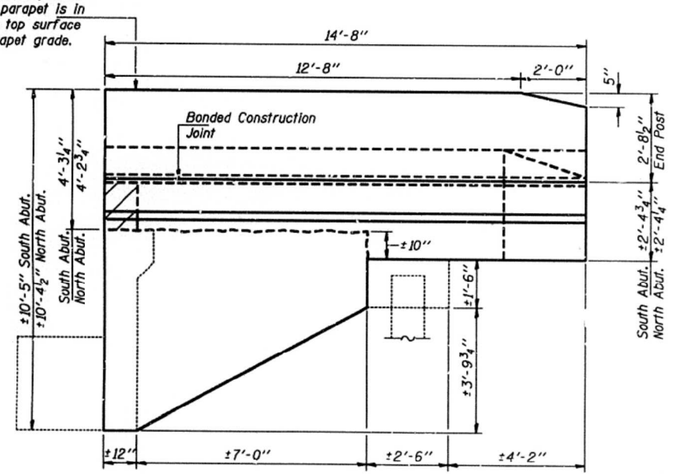

WINGWALL ELEVATION
Showing Dimensions.
Typical for all wingwalls.

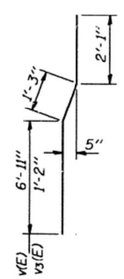

BARS v(E) and v3(E)

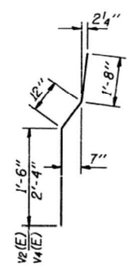

BARS v2(E) and v4(E)

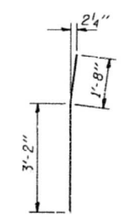

BAR v5(E)

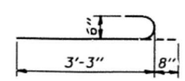

BAR h6(E)

BILL OF MATERIAL FOR TWO ABUTMENTS

Bar	No.	Size	Length	Shape
h(E)	24	#4	7'-9"	
h1(E)	32	#4	14'-5"	
h2(E)	4	#4	6'-5"	
h3(E)	12	#4	14'-5"	
h4(E)	16	#5	6'-0"	L
h5(E)	8	#6	28'-9"	
h6(E)	108	#6	3'-11"	
u(E)	60	#5	3'-3"	⊓
v(E)	4	#6	10'-3"	
v1(E)	16	#6	16'-7"	
v2(E)	36	#6	4'-2"	
v3(E)	28	#6	4'-6"	
v4(E)	16	#6	5'-0"	
v5(E)	12	#6	4'-10"	
v6(E)	38	#4	1'-9"	
Expansion Bolts 3/4"ϕ			Each	86
Class X Concrete			Cu. Yd.	9.2
Reinforcement Bars (Epoxy Coated)			Pound	2980
Concrete Removal			Cu. Yd.	12
Structure Excavation			Cu. Yd.	13

Reinforcement bars designated (E) shall be epoxy coated.

DESIGNED [signature]
CHECKED Mc-HAEL ARTUGUN
DRAWN Joe Sutherland
CHECKED TPH

Jan 3 1996
EXAMINED [signature] ENGINEER OF BRIDGE DESIGN
PASSED [signature] ENGINEER OF BRIDGE AND STRUCTURES
APPROVED DIRECTOR OF HIGHWAYS

FOR INFORMATION ONLY

ABUTMENT DETAILS
F.A.I. RT. 74 SEC. (90-15HB-4)I
TAZEWELL COUNTY
STATION 922+60.73

MODEL: Default
FILE NAME: P:\2019\190388\W06 I-74 Bridge PSEs\4 CADD - DWG\4.4 Struc\0900077\0900077-68F54-027 Existing Abutment Details.dgn

TWM ENGINEERING GEOSPATIAL SERVICES
TWM, INC.
WWW.TWM-INC.COM
IL DESIGN FIRM LICENSE NO: 184-001220

USER NAME = ckoltveit	DESIGNED - NP	REVISED -
	CHECKED - ALN	REVISED -
PLOT SCALE = 0:2.0000 ':" / in.	DRAWN - NP	REVISED -
PLOT DATE = 12/1/2020	CHECKED - ALN	REVISED -

STATE OF ILLINOIS
DEPARTMENT OF TRANSPORTATION

EXISTING ABUTMENT DETAILS
SN 090-0077
SHEET 27 OF 29 SHEETS

F.A.I. RTE.	SECTION	COUNTY	TOTAL SHEETS	SHEET NO.
74	90-15[HB(1-4);VB;B]BP,BJR,BRR	TAZEWELL	192	177
		CONTRACT NO. 68F54		
	ILLINOIS	FED. AID PROJECT		

STATE OF ILLINOIS
DEPARTMENT OF PUBLIC WORKS & BUILDINGS
DIVISION OF HIGHWAYS

ROUTE No.	SEC.	COUNTY	TOTAL SHEETS	SHEET NO.
F.A.I. 5	90-15 HB-4	TAZEWELL	25	10
FED. ROAD DIST. No. 7	ILLINOIS	PROJECT		

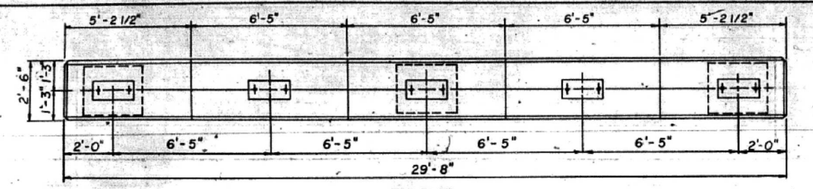

TOP PLAN

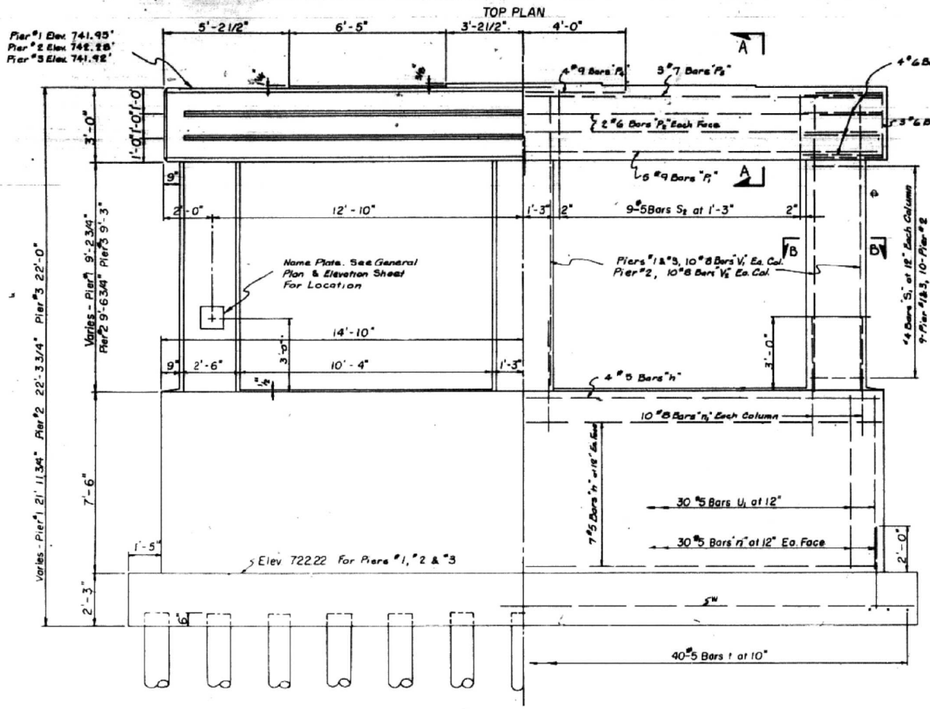

ELEVATION

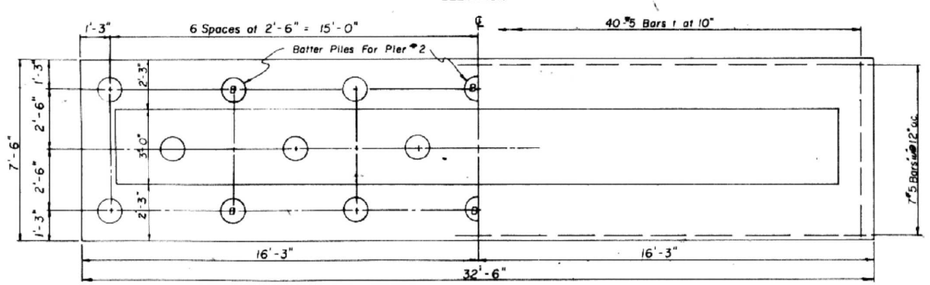

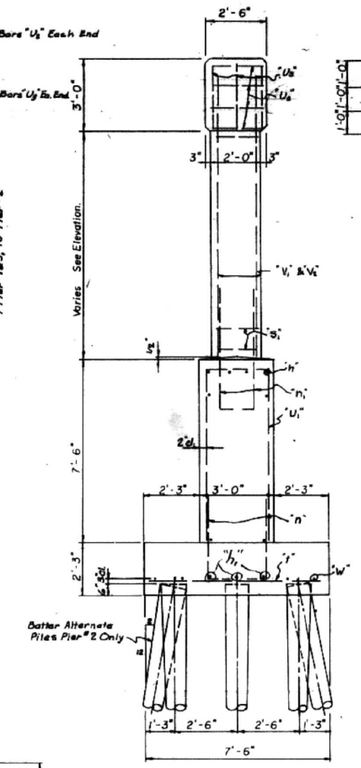

END VIEW

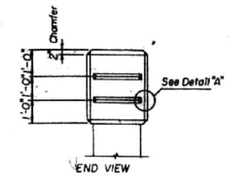

END VIEW
PIER CAP
SHOWING NOTCH DETAIL

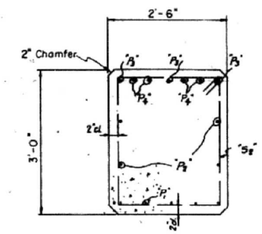

SECTION A-A

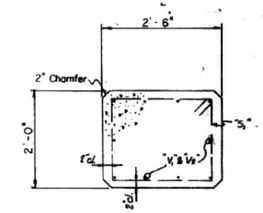

SECTION B-B

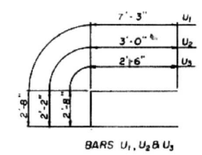

BARS U_1, U_2 & U_3

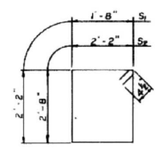

BARS S_1 & S_2

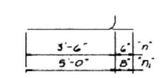

Bars n & n_1

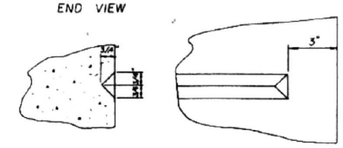

SECTION

DETAIL "A-A"

BILL OF MATERIAL - 3 PIERS				
BAR	NUMBER	SIZE	LENGTH	SHAPE
"t"	120	#5	7'-0"	——
"n"	180	#5	4'-0"	——
"n1"	90	#8	5'-8"	——
"h"	54	#5	29'-4"	——
"h1"	9	#7	29'-4"	——
"V1"	60	#8	12'-0"	——
"V2"	30	#8	12'-3"	——
"S1"	84	#4	8'-5"	
"S2"	54	#5	10'-5"	
"U1"	90	#5	11'-2"	
"U2"	24	#6	8'-2"	
"U3"	18	#6	7'-8"	
"P1"	15	#9	29'-4"	——
"P2"	12	#6	29'-4"	——
"P3"	9	#7	29'-4"	——
"P4"	12	#9	8'-0"	——
"w"	24	#5	17'-0"	——
Class "X" Concrete			Cu. Yds.	175.2
Reinforcement Bars			lbs.	18570
Class "A" Excavation			Cu. Yds.	200
Furnishing Piles			Lin. Ft.	1675
Driving Timber Piles			Lin. Ft.	1675
Test Piles			Each	1

PILE DATA	
Type	Creosoted
Capacity	20 Tons
Estimated Length	25 Ft.
No. Reqd. For 3 Piers	60 Includes test Piles

PIER DETAILS

F.A.I. ROUTE 5 - SECTION 90 - 15HB4

S.A. ROUTE 6 OVER F.A.I. ROUTE 5
STATION 922+6073
TAZEWELL COUNTY

WARREN AND VAN PRAAG, INC.
CONSULTING ENGINEERS - DECATUR, ILLINOIS

DESIGNED	H. E. K.
CHECKED	H. Y. F.
DRAWN	J. T.
CHECKED	H. Y. F.

EXAMINED
ENGINEER OF BRIDGES AND TRAFFIC STRUCTURES
PASSED
ENGINEER OF DESIGN
APPROVED
CHIEF HIGHWAY ENGINEER

FOR INFORMATION ONLY

MODEL: Default
FILE NAME: P:\2019\190388\W06 I-74 Bridge PSEs\4 CADD - DWG\4.4 Struc\0900077\0900077-68F54-028 Existing Pier Details.dgn

TWM ENGINEERING GEOSPATIAL SERVICES
TWM, INC.
WWW.TWM-INC.COM
IL DESIGN FIRM LICENSE NO: 184-001220

USER NAME = ckoltveit	DESIGNED - NP	REVISED -	
	CHECKED - ALN	REVISED -	
PLOT SCALE = 0:2.0000 ':" / in.	DRAWN - NP	REVISED -	
PLOT DATE = 12/1/2020	CHECKED - ALN	REVISED -	

STATE OF ILLINOIS
DEPARTMENT OF TRANSPORTATION

EXISTING PIER DETAILS
SN 090-0077
SHEET 28 OF 29 SHEETS

F.A.I. RTE.	SECTION	COUNTY	TOTAL SHEETS	SHEET NO.
74	90-15[HB(1-4);VB;B]BP,BJR,BRR	TAZEWELL	192	178
		CONTRACT NO. 68F54		
	ILLINOIS	FED. AID PROJECT		

FAI 74	*	TAZEWELL	18	6

* (90-15HB-4) I

TYPE B INLET STD 2324 SPL

LOCATION	T.G. ELEV.	INVERT ELEV.
14.5' RT 16+26	746.45	743.36
14.5' LT 16+26	746.45	743.16
14.5' RT 13+74	745.34	742.05
14.5' LT 13+74	745.34	742.25

PIPE WAS BURIED BELOW GROUND

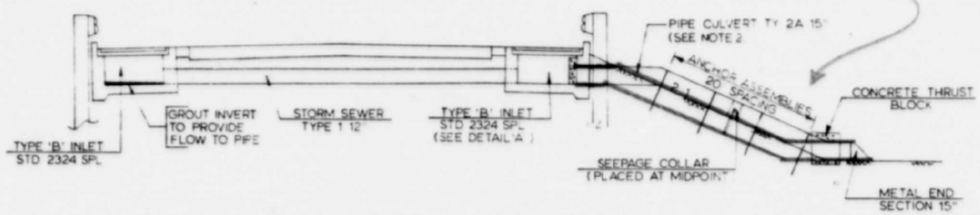

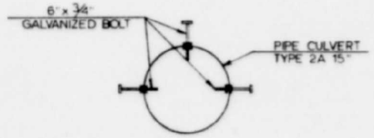

SECTION A-A

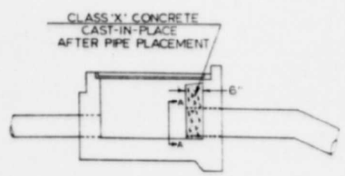

DETAIL 'A'

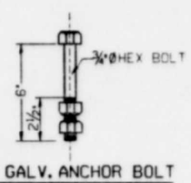

6"x3/4" GALV. ANCHOR BOLT

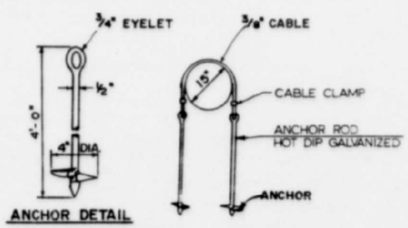

ANCHOR DETAIL

ANCHOR ASSEMBLIES DETAIL

END VIEW

NOTES:

1) TYPE B INLET TO BE CONSTRUCTED AND INSTALLED AS PER STANDARD 2324, EXCEPT AS NOTED HEREON. TYPE B INLET BOX TO BE PAID FOR AT THE CONTRACT UNIT PRICE EACH FOR TYPE B INLET STD 2324 SPECIAL. COST OF CLASS X CONCRETE, GROUT, AND 6"x3/4" GALVANIZED BOLTS SHALL BE INCLUDED IN THIS CONTRACT UNIT PRICE, WITH NO OTHER COMPENSATION ALLOWED.
2) THE MATERIAL FOR PIPE CULVERTS TYPE 2A SHALL BE PRECOATED GALVANIZED CORRUGATED STEEL PIPE. ALL CONNECTING BANDS SHALL HAVE A MINIMUM WIDTH OF 24" AND SHALL BE PRECOATED. AN APPROVED MASTIC JOINT SEALER SHALL BE APPLIED TO THE INSIDE OF THE CONNECTING BAND. PIPE CULVERTS AND END SECTIONS SHALL BE INSTALLED, MEASURED, AND PAID FOR IN ACCORDANCE WITH SECTION 51 OF THE STANDARD SPECIFICATIONS. ANCHOR ASSEMBLIES SHALL BE INCLUDED IN THE UNIT PRICE OF PIPE CULVERTS TY. 2A 15
3) CONCRETE THRUST BLOCKS SHALL BE PAID FOR AT THE CONTRACT UNIT PRICE EACH FOR CONCRETE THRUST BLOCKS.
4) SEEPAGE COLLARS SHALL BE PAID FOR AT THE CONTRACT UNIT PRICE EACH FOR SEEPAGE COLLAR, WHICH SHALL INCLUDE ALL EXCAVATION, CLASS X CONCRETE, ANCHORS, CONNECTING BAND, AND COMPACTED BACKFILL NECESSARY FOR COMPLETE INSTALLATION.

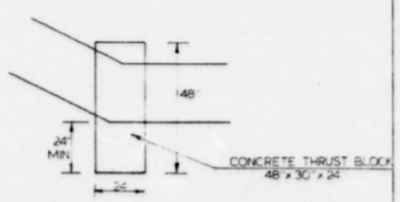

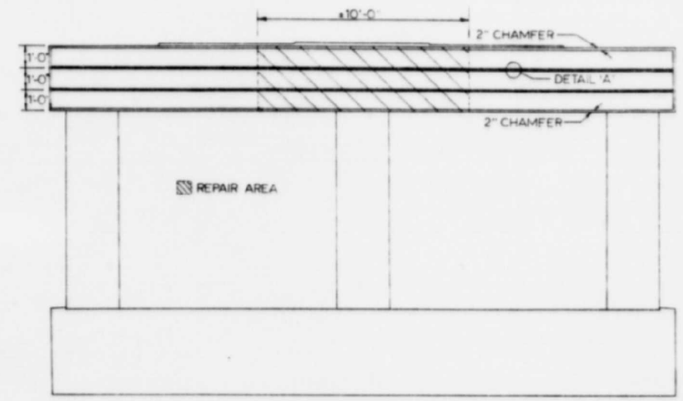

ELEVATION
PIER 1

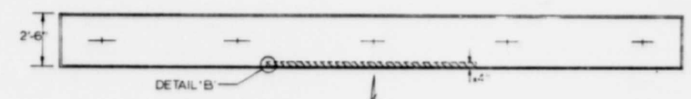

PLAN
PIER 1

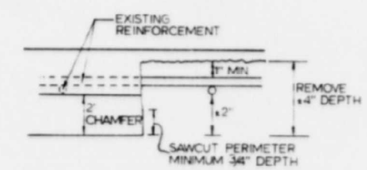

DETAIL 'B'

DETAIL 'A'
ARCHITECTURAL GROOVE

QUANTITIES

CONCRETE REMOVAL (SPL) ±0.4 CY
CLASS X CONCRETE (SPL) ±0.4 CY

SHOULDER DRAIN DETAIL
STA. 13+74 & 16+26

REPAIR DETAIL
PIER 1

FOR INFORMATION ONLY

DISTRICT NO. 4 PEORIA
DESIGNED MILLER
DRAWN MILLER
CHECKED
DATE 7-16-85
SCALE NONE

MODEL: Default
FILE NAME: P:\2019\190388\W06 I-74 Bridge PSEs\4 CADD - DWG\4.4 Struc\0900077\0900077-68F54-029 Existing Pier Details.dgn

TWM ENGINEERING GEOSPATIAL SERVICES	TWM, INC. WWW.TWM-INC.COM IL DESIGN FIRM LICENSE NO: 184-001220	USER NAME = ckoltveit	DESIGNED - NP	REVISED -	STATE OF ILLINOIS DEPARTMENT OF TRANSPORTATION	EXISTING PIER DETAILS SN 090-0077
			CHECKED - ALN	REVISED -		
		PLOT SCALE = 0:2.0000 ':" / in.	DRAWN - NP	REVISED -		
		PLOT DATE = 12/1/2020	CHECKED - ALN	REVISED -		SHEET 29 OF 29 SHEETS

F.A.I. RTE.	SECTION	COUNTY	TOTAL SHEETS	SHEET NO.
74	90-15(HB(1-4);VB;B)BP,BJR,BRR	TAZEWELL	192	179
		CONTRACT NO. 68F54		
		ILLINOIS	FED. AID PROJECT	

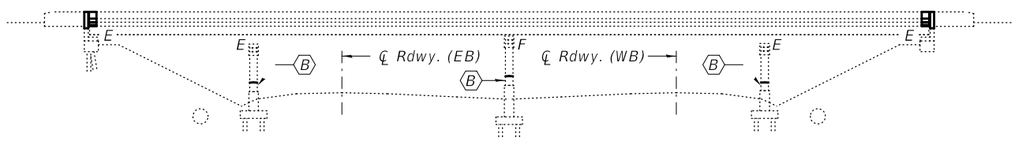

ELEVATION

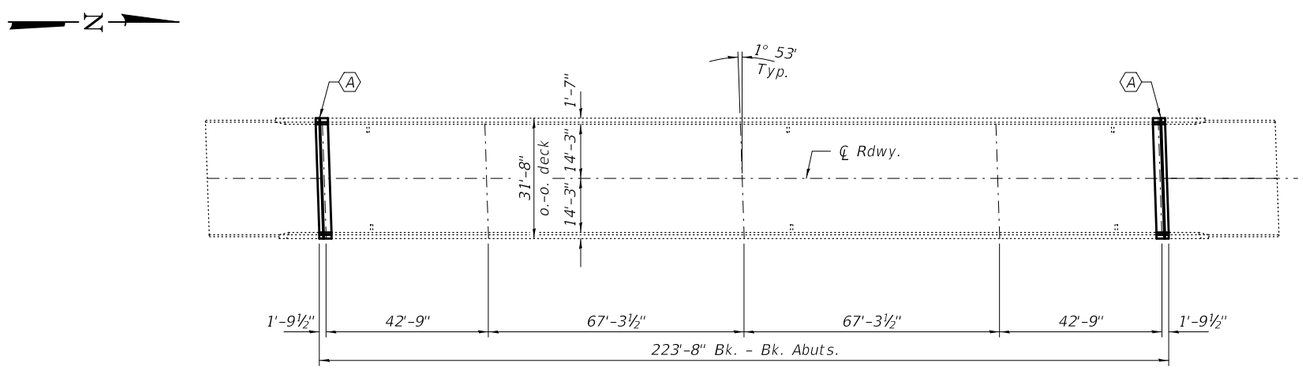

PLAN

(A) - Remove & Replace existing Expansion Joint with a Preformed Joint Strip Seal.

(B) - Install new crashwall extensions to the piers.

GENERAL NOTES

All structural steel shall conform to AASHTO Classification M-270 Gr. 36, unless otherwise noted.

Plan dimensions and details relative to existing plans are subject to nominal construction variations. The Contractor shall field verify existing dimensions and details affecting new construction and make necessary approved adjustments prior to construction or ordering of materials. Such variations shall not be cause for additional compensation for a change in scope of the work, however, the Contractor will be paid for the quantity actually furnished at the unit price bid for the work.

Reinforcement bars designated (E) shall be epoxy coated.

Prior to pouring the new concrete deck, all heavy or loose rust, loose mill scale, and other loose or potentially detrimental foreign material shall be removed from the surfaces in contact with concrete. Tightly adhered paint may remain unless otherwise noted. Removal shall be accomplished by methods that will not damage the steel and the cost will be included in the pay item covering removal of the existing concrete.

Existing reinforcement bars extending into the removal area shall be cleaned, straightened and incorporated into the new construction. Any reinforcement bars that are damaged during concrete removal shall be replaced with an approved bar splicer or anchorage system. Cost included with Concrete Removal.

Joint openings shall be adjusted according to Article 520.04 of the Std. Specs. when the deck is poured at an ambient temperature other than 50° F.

The cost of epoxy grouting threaded rods shall be included with Reinforcement Bars, Epoxy Coated.

The deck surface shall have its final finish tined according to Article 420.09(e)(1) of the Standard Specifications. Cost included with Concrete Superstructure.

Work to be completed under road closure.

TOTAL BILL OF MATERIAL

	ITEM	UNIT	QUANTITY
	Concrete Removal	Cu. Yd.	6.4
	Concrete Structures	Cu. Yd.	10.6
	Concrete Superstructure	Cu. Yd.	6.4
	Reinforcement Bars, Epoxy Coated	Pound	2380
	Preformed Joint Strip Seal	Foot	61
*	Protective Coat	Sq. Yd.	71
	Structural Repair of Concrete (Depth ≤ 5")	Sq. Ft.	70

* Apply to new concrete only.

EXPIRES 11-30-2022

DESIGNED - Victor H. Veliz	EXAMINED	DATE - DECEMBER 03, 2020	STATE OF ILLINOIS DEPARTMENT OF TRANSPORTATION
CHECKED - Adrian T. Halloway	ENGINEER OF STRUCTURAL SERVICES		
DRAWN - daburdell	PASSED	REVISED -	
CHECKED - VHV ATH	ENGINEER OF BRIDGES AND STRUCTURES	REVISED -	

GENERAL PLAN AND ELEVATION
TENNESSEE RD (TR 234) OVER I-74
SN 090-0084
SHEET NO. 1 OF 6 SHEETS

F.A. RTE.	SECTION	COUNTY	TOTAL SHEETS	SHEET NO.
	90-15[HB(1-4),VB,B] BP,BJR,BRR	TAZEWELL	192	180
		CONTRACT NO. 68F54		
		ILLINOIS	FED. AID PROJECT	

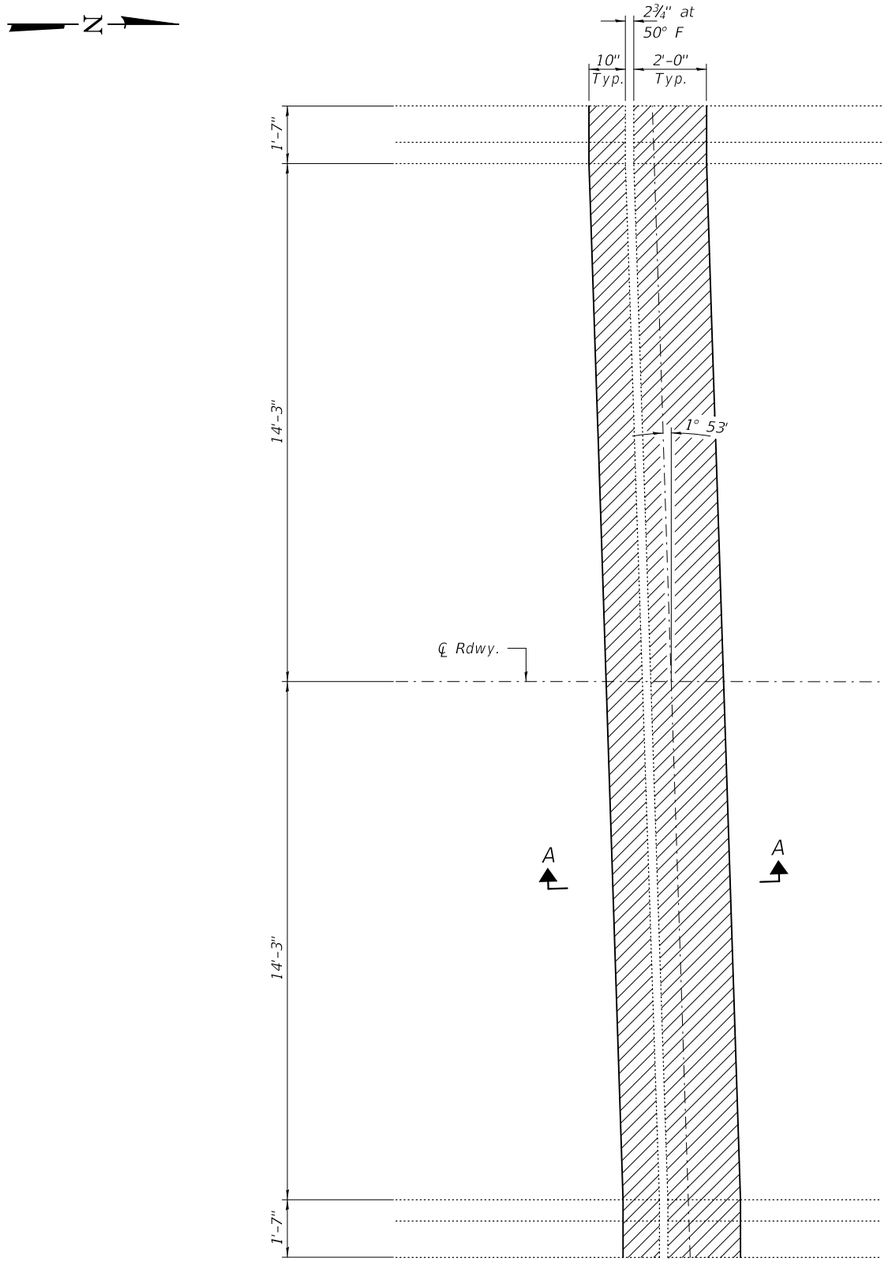

CONCRETE REMOVAL

(South Abut. shown, North Abut. similar)

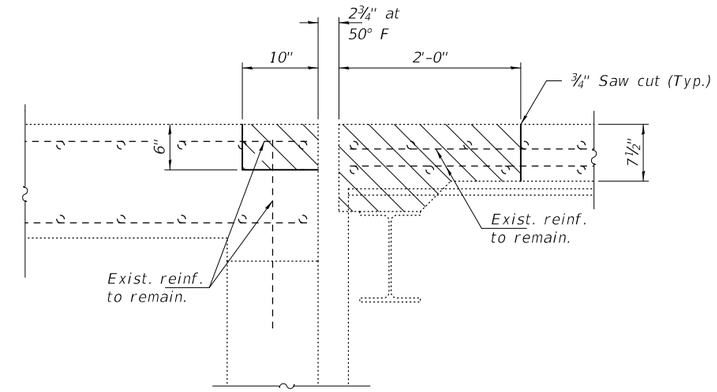

SECTION A-A

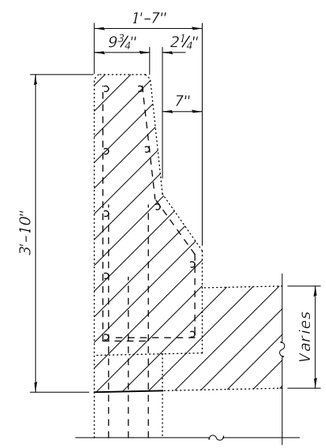

SECTION THRU APPROACH PARAPET

(All existing reinforcement is to remain.)

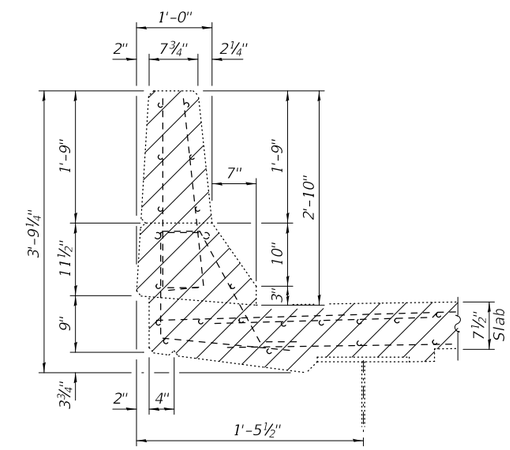

SECTION THRU BRIDGE PARAPET

Note:
Hatched areas indicate Concrete Removal.
See sheet 4 of - for Bill of Material.

DESIGNED - VHV	EXAMINED	ENGINEER OF STRUCTURAL SERVICES	DATE - DECEMBER 03, 2020	STATE OF ILLINOIS DEPARTMENT OF TRANSPORTATION	JOINT REMOVAL DETAILS - ABUTMENTS SN 090-0084	F.A. RTE.	SECTION	COUNTY	TOTAL SHEETS / SHEET NO.
CHECKED - ATH							90-15[HB(1-4),VB,B] BP,BJR,BRR	TAZEWELL	192 / 181
DRAWN - daburdell	PASSED	ENGINEER OF BRIDGES AND STRUCTURES	REVISED -		SHEET NO. 2 OF 6 SHEETS		CONTRACT NO. 68F54		
CHECKED - VHV ATH			REVISED -				ILLINOIS FED. AID PROJECT		

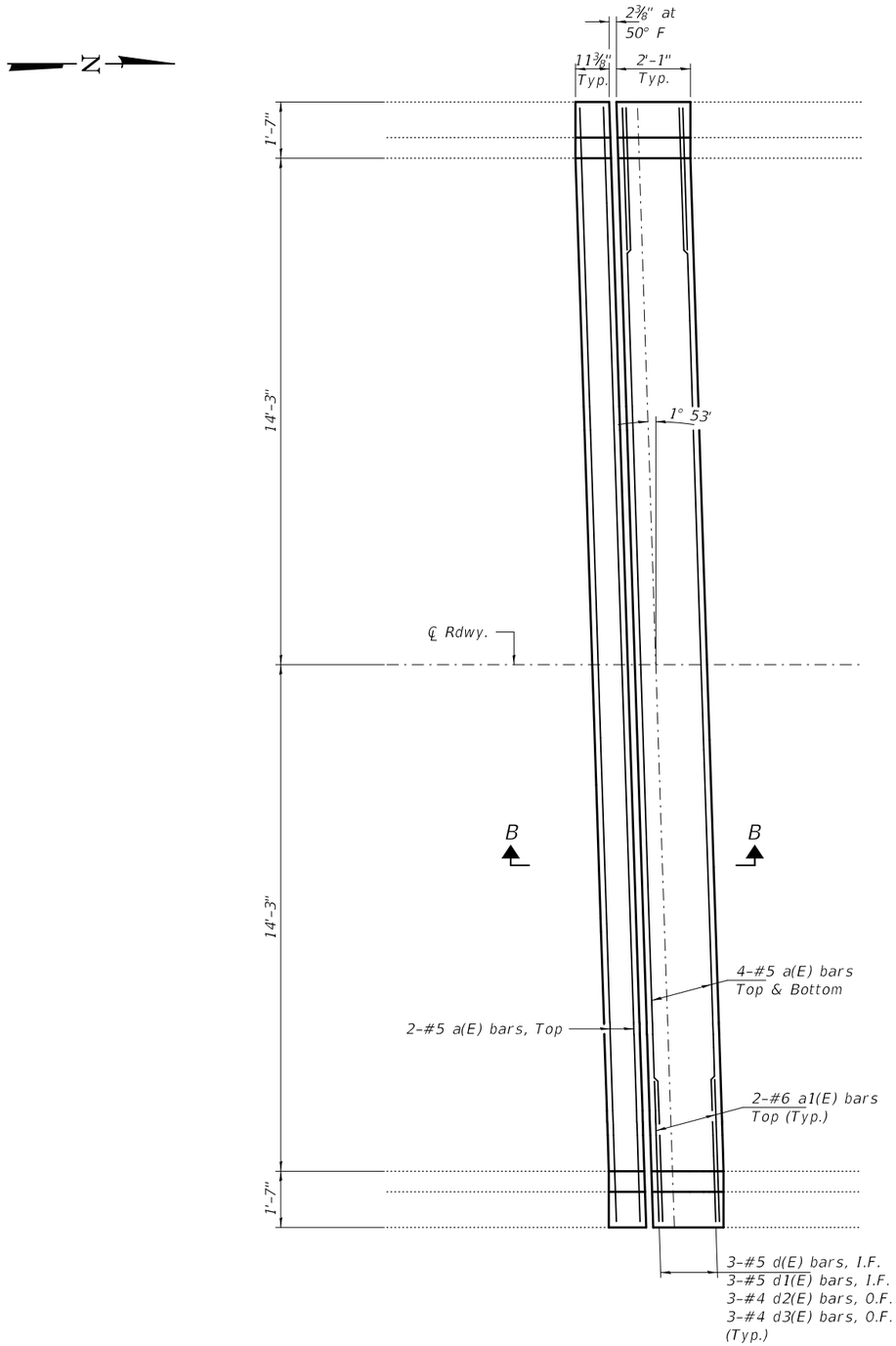

CONCRETE REPLACEMENT

(South Abut. shown, North Abut. similar)

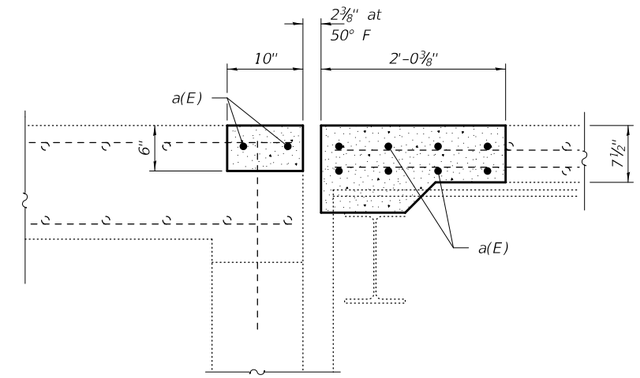

SECTION B-B

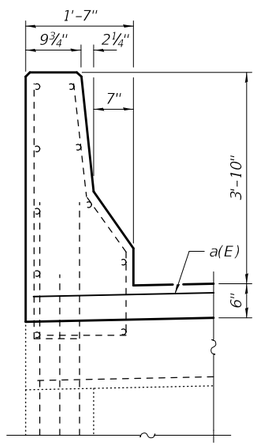

SECTION THRU APPROACH PARAPET

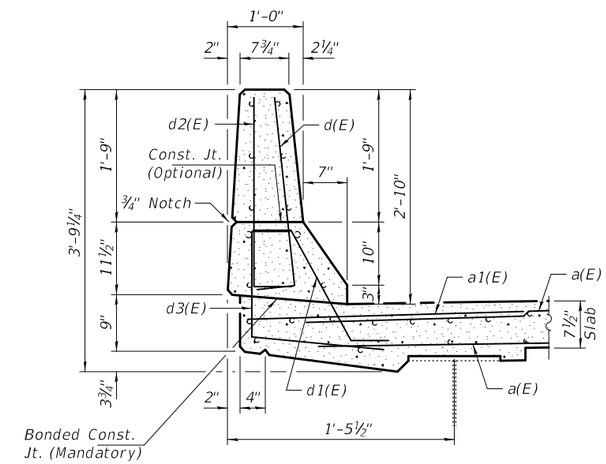

SECTION THRU BRIDGE PARAPET

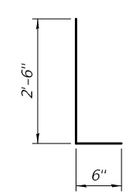

BARS d(E) & d2(E)

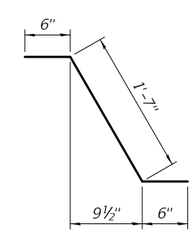

BAR d1(E)

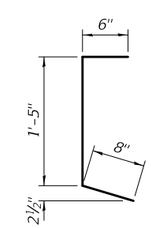

BAR d3(E)

BILL OF MATERIAL - 2 ABUTS.

Bar	No.	Size	Length	Shape
a(E)	20	#5	30'-8"	
a1(E)	8	#6	4'-0"	
d(E)	12	#5	3'-0"	
d1(E)	12	#5	2'-7"	
d2(E)	12	#4	3'-0"	
d3(E)	12	#4	2'-7"	
Concrete Removal			Cu. Yd.	6.4
Concrete Superstructure			Cu. Yd.	6.4
Reinforcement Bars, Epoxy Coated			Pound	810
* Protective Coat			Sq. Yd.	23

* Apply to new concrete only.

DESIGNED - VHV	EXAMINED	DATE - DECEMBER 03, 2020	STATE OF ILLINOIS DEPARTMENT OF TRANSPORTATION
CHECKED - ATH	ENGINEER OF STRUCTURAL SERVICES		
DRAWN - daburdell	PASSED	REVISED -	
CHECKED - VHV ATH	ENGINEER OF BRIDGES AND STRUCTURES	REVISED -	

JOINT REPLACEMENT DETAILS - ABUTMENTS
SN 090-0084

SHEET NO. 3 OF 6 SHEETS

F.A. RTE.	SECTION	COUNTY	TOTAL SHEETS	SHEET NO.
	90-15(HB(1-4),VB,B) BP,BJR,BRR	TAZEWELL	192	182
		CONTRACT NO. 68F54		
	ILLINOIS	FED. AID PROJECT		

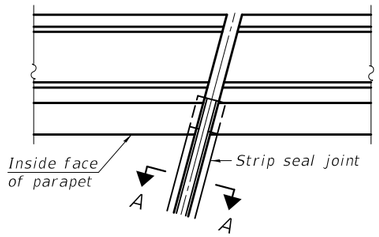

FOR SKEWS ≤ 30°

PLAN AT PARAPET

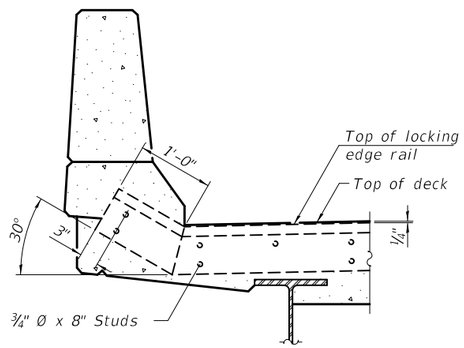

ELEVATION AT PARAPET

(Skews ≤ 30°)

Notes:

The strip seal shall be made continuous and shall have a minimum thickness of ¼". The configuration of the strip seal shall match the configuration of the locking edge rails. Open or "webbed" strip seal gland configurations are not permitted. The gland shall be sized for a maximum rated movement of 4 inches.

The locking edge rails depicted are configured for typical applications and are conceptual only. The actual configuration of the locking edge rails and matching strip seal may vary from manufacturer to manufacturer provided they fit the application and meet the minimum anchorage shown. Flanged edge rails, however, will not be allowed. Locking edge rails may exceed the 4½" maximum depth provided the anchorage system is revised according to the manufacturer's recommendation.

The manufacturer's recommended installation methods shall be followed.

All steel components shall be galvanized after fabrication according to Article 520.03 of the Standard Specifications.

The Maximum space between locking edge rail segments shall be 3/16" and sealed with a suitable sealant; however, any rail joint within 10' measured perpendicular to the face of the curb or parapet shall be welded as shown in the locking edge rail splice detail.

The concrete opening below the strip seal will vary based on the locking edge rail chosen by the Contractor. Deck and parapet lengths shown elsewhere in the plans are dimensioned to the concrete opening, not the joint opening, and are based on the rolled locking edge rail. If the Contractor elects to use a different locking edge rail, dimensional adjustments may be required. One exception to this would be the strip seal joint at the end of the precast bridge approach slab. For these cases the pavement connector length shall be adjusted, not the length of the bridge approach slab.

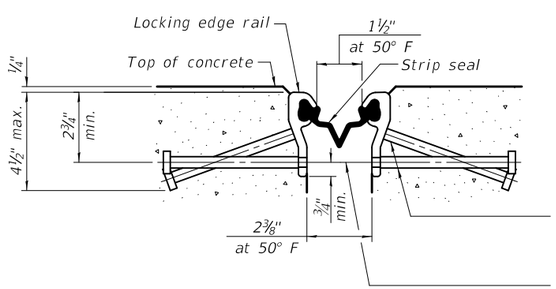

SHOWING ROLLED RAIL JOINT

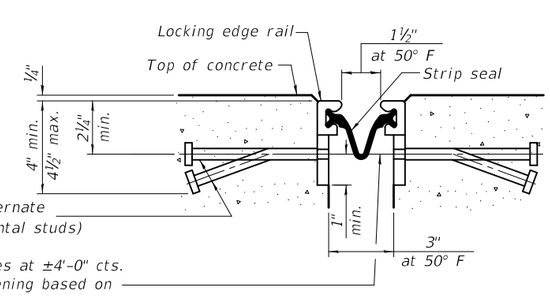

SHOWING WELDED RAIL JOINT

* ⅝" Ø x 6" studs @ 6" cts. (alternate angled/bent studs with horizontal studs)

⅜" ϕ threaded rods in 7/16" ϕ holes at ±4'-0" cts. for holding the proper joint opening based on the temperature during the deck pour. Place to miss studs. All rods shall be burned, or sawed off flush with the plates after concrete is set.

SECTION A-A

* Granular or solid flux filled headed studs conforming to Article 1006.32 of the Std. Specs., automatically end welded.

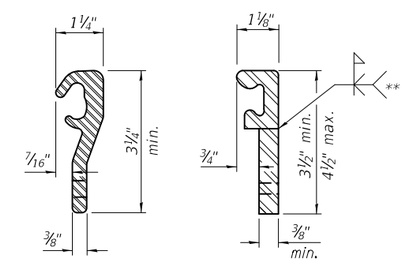

ROLLED (EXTRUDED) RAIL

WELDED RAIL

LOCKING EDGE RAILS

** Back gouge not required if complete joint penetration is verified by mock-up.

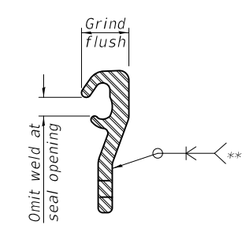

LOCKING EDGE RAIL SPLICE

The inside of the locking edge rail groove shall be free of weld residue. Rolled rail shown, welded rail similar.

BILL OF MATERIAL

Item	Unit	Total
Preformed Joint Strip Seal	Foot	61

DESIGNED - VHV	EXAMINED	DATE - DECEMBER 03, 2020	STATE OF ILLINOIS DEPARTMENT OF TRANSPORTATION
CHECKED - ATH	ENGINEER OF STRUCTURAL SERVICES		
DRAWN - daburdell	PASSED	REVISED -	
CHECKED - VHV ATH	ENGINEER OF BRIDGES AND STRUCTURES	REVISED -	

PREFORMED JOINT STRIP SEAL
SN 090-0084

SHEET NO. 4 OF 6 SHEETS

F.A. RTE.	SECTION	COUNTY	TOTAL SHEETS	SHEET NO.
	90-15[HB(1-4),VB,B] BP,BJR,BRR	TAZEWELL	192	183
		CONTRACT NO. 68F54		
		ILLINOIS FED. AID PROJECT		

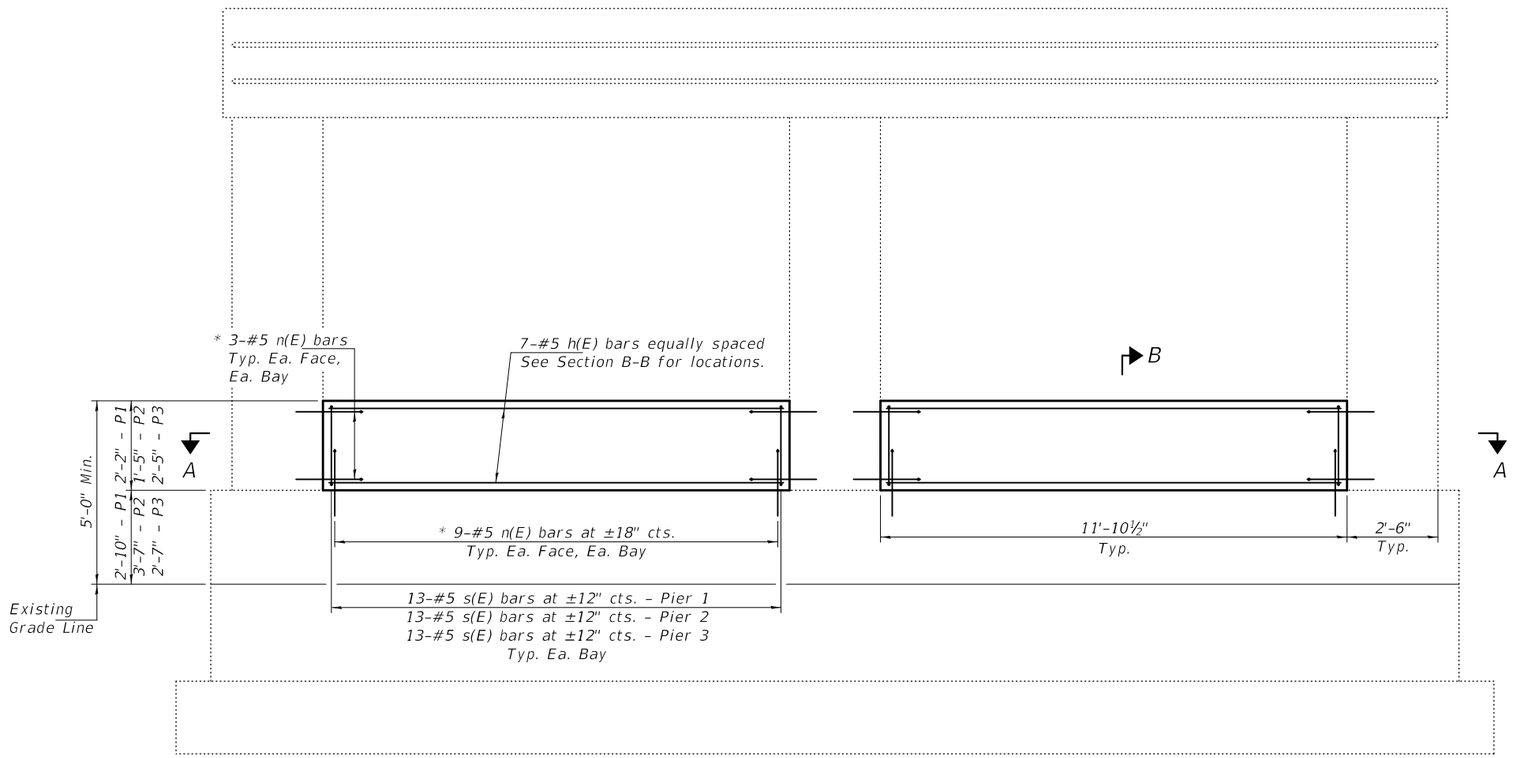

ELEVATION
(Looking North)

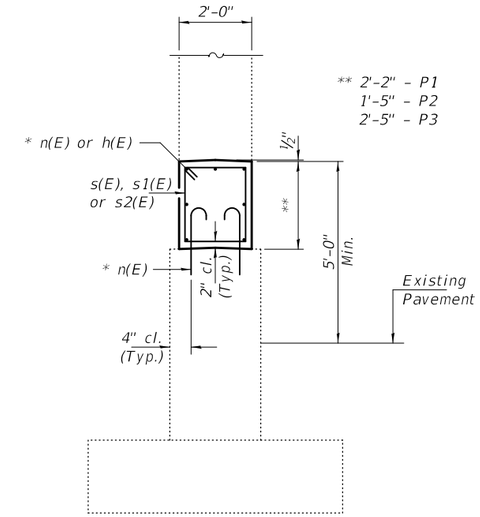

SECTION B-B

* Epoxy grout n(E) bars in 9" min. holes according to Article 584 of the Standard Specifications.

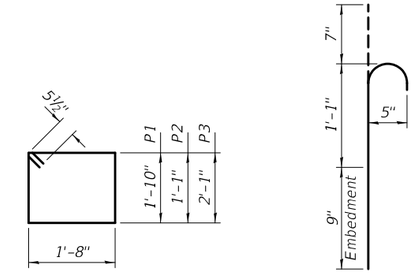

BARS s(E), s1(E) & s2(E)

BAR n(E)

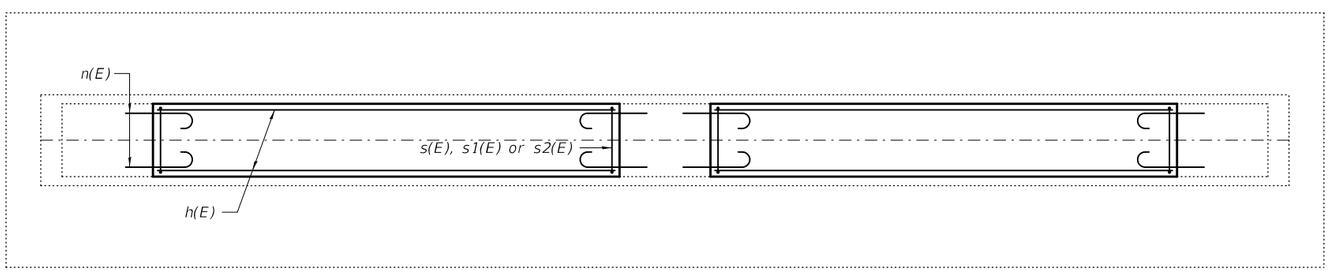

SECTION A-A

BILL OF MATERIAL - ALL PIERS

	Bar	No.	Size	Length	Shape
	h(E)	42	#5	11'-7"	
	n(E)	180	#5	2'-5"	
	s(E)	26	#5	7'-11"	
	s1(E)	26	#5	6'-5"	
	s2(E)	26	#5	8'-5"	
	Concrete Structures			Cu. Yd.	10.6
**	Protective Coat			Sq. Yd.	48
	Reinforcement Bars, Epoxy Coated			Pound	1580

** Apply to new concrete only.

DESIGNED - VHV	EXAMINED	DATE - DECEMBER 03, 2020	STATE OF ILLINOIS DEPARTMENT OF TRANSPORTATION
CHECKED - ATH	ENGINEER OF STRUCTURAL SERVICES		
DRAWN - daburdell	PASSED	REVISED -	
CHECKED - VHV ATH	ENGINEER OF BRIDGES AND STRUCTURES	REVISED -	

PIER CRASHWALL EXTENSION - ALL PIERS
SN 090-0084
SHEET NO. 5 OF 6 SHEETS

F.A. RTE.	SECTION	COUNTY	TOTAL SHEETS	SHEET NO.
	90-15[HB(1-4),VB,B] BP,BJR,BRR	TAZEWELL	192	184
		CONTRACT NO. 68F54		
		ILLINOIS	FED. AID PROJECT	

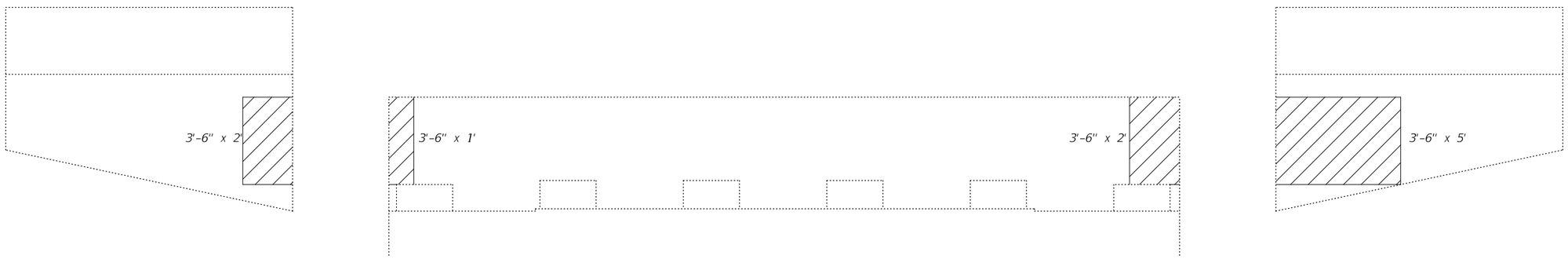

ELEVATION

South Abut. shown looking South,
North Abut. Typ. looking North

Note:
Hatched area indicates Structural Repair of Concrete (Depth ≤ 5").

BILL OF MATERIAL

Item	Unit	Total
Structural Repair of Concrete (Depth ≤ 5")	Sq. Ft.	70

DESIGNED - VHV	EXAMINED	ENGINEER OF STRUCTURAL SERVICES	DATE - DECEMBER 03, 2020
CHECKED - ATH			
DRAWN - daburdell	PASSED	ENGINEER OF BRIDGES AND STRUCTURES	REVISED -
CHECKED - VHV ATH			REVISED -

STATE OF ILLINOIS
DEPARTMENT OF TRANSPORTATION

SUBSTRUCTURE REPAIR - ABUTMENTS
SN 090-0084

SHEET NO. 6 OF 6 SHEETS

F.A. RTE.	SECTION	COUNTY	TOTAL SHEETS	SHEET NO.
	90-15[HB(1-4),VB,B] BP,BJR,BRR	TAZEWELL	192	185
		CONTRACT NO. 68F54		
	ILLINOIS	FED. AID PROJECT		

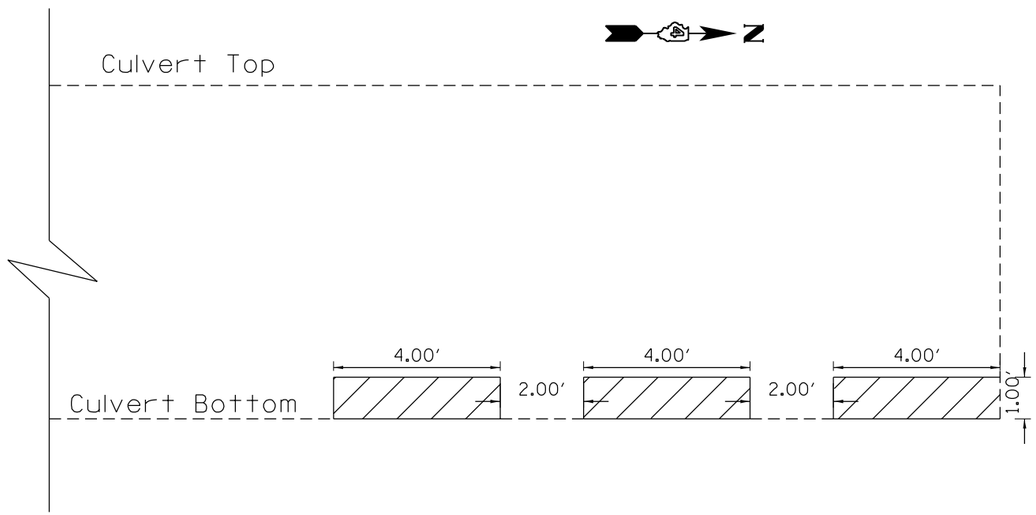

ELEVATION

(WEST WALL)

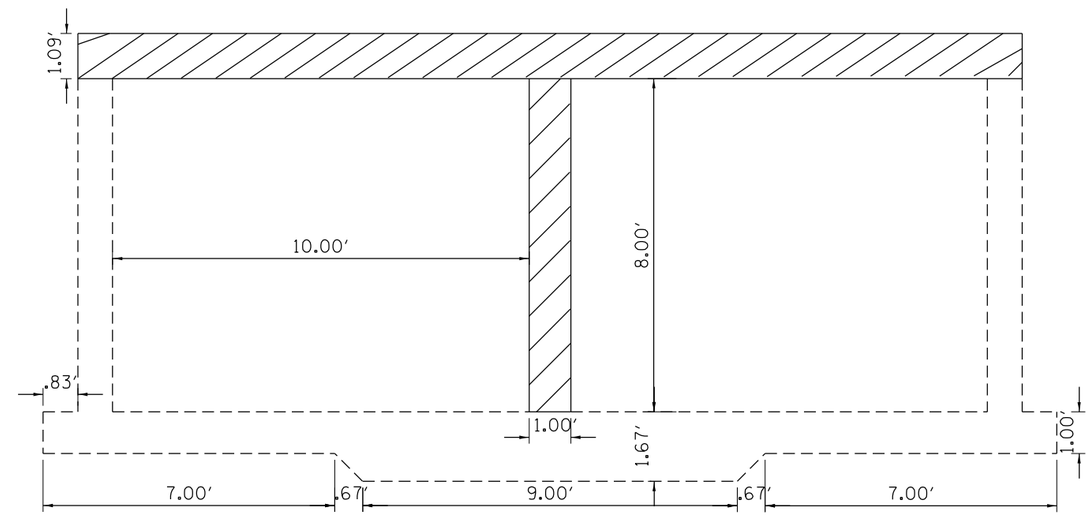

ELEVATION

(SOUTH HEADWALL)

TOTAL BILL OF MATERIAL

STRUCTURAL REPAIR OF CONCRETE (DEPTH GREATER THAN 5 INCHES)	SQ FT	47

LEGEND

STRUCTURAL REPAIR CONCRETE >5"

NOTE: THE CONTRACTOR SHALL DIVERT WATER, AS NEEDED, TO COMPLETE THIS WORK. ANY COSTS ASSOCIATED WITH DIVERTING WATER SHALL BE CONSIDERED INCLUDED IN THE COST OF STRUCTURAL REPAIR OF CONCRETE (DEPTH GREATER THAN 5 INCHES)

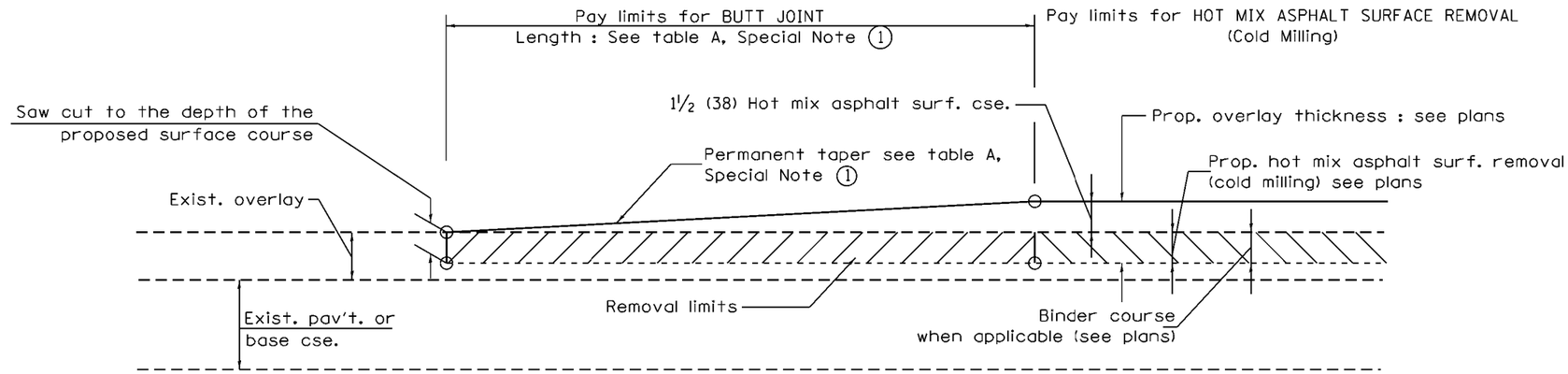

CASE 1 : WITH HOT MIX ASPHALT SURFACE REMOVAL (COLD MILLING)

TABLE A
TAPER RATES

SPECIAL NOTE NUMBER	ELEMENT	MAINLINE INTERSTATES & 4-LANE EXPRESSWAYS	ALL OTHERS
1	BUTT JOINT TAPER RATE	1:480	1:240
2	TEMPORARY RAMP TAPER RATE	1:80	1:40

GENERAL NOTES

1. The work shall be done in accordance with Article 406.08 and the Special Provision for Butt Joints.
2. The pavement surface to be removed may be either bituminous or P.C. concrete. The work shall be performed in accordance with Article 440.04 and the Special Provisions for Butt Joints.
3. The saw cut joints shall be primed just prior to the placing of bituminous material. The work will be in accordance with the applicable portions of Article 406.05.
4. The length of butt joint is based on the taper rate times change in cold milling depth within the butt joint pay limits, unless otherwise indicated.
5. Temporary ramps are paid for separately and not included in the cost of the butt joints.

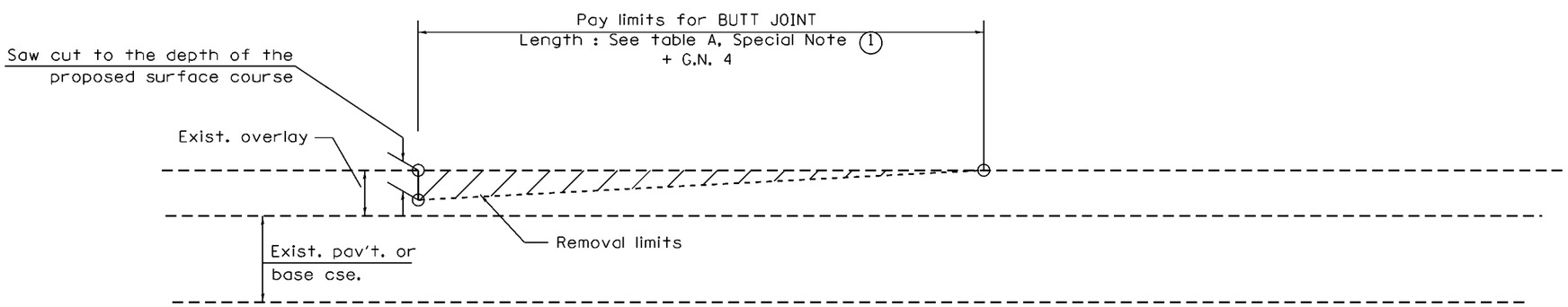

CASE 2 : NO HOT MIX ASPHALT SURFACE REMOVAL (COLD MILLING)

All dimensions are in inches (millimeters) unless otherwise noted.

01-01-97	RENUM. C-23.01, NEW REVISION BOX	T.P.	08-21-13	MAJOR MODIFICATIONS	R.D.
04-01-97	CORRECTION TO DEPTH	J.A.	04-12-16	MINOR CORRECTIONS	R.D.
09-15-05	REVISED DESIGNER NOTE	M.M.A.	02-14-17	ADDED NOTE 5	R.D.
10-16-06	REVISED TO 2007 SPEC.	M.A.	07-16-19	Wording and Spelling corrections	R.D.

STATE OF ILLINOIS
DEPARTMENT OF TRANSPORTATION

BUTT JOINTS

NOT TO SCALE

SHT. 1 OF 3
CADD STD. 406101-D4

F.A.I RTE.	SECTION	COUNTY	TOTAL SHEETS	SHEET NO.
74	90-15(HB(1-4);VB;B)BP,BJR,BRR	TAZEWELL	192	187
		CONTRACT NO. 68F54		
FED. ROAD DIST. NO.	ILLINOIS	FED. AID PROJECT		

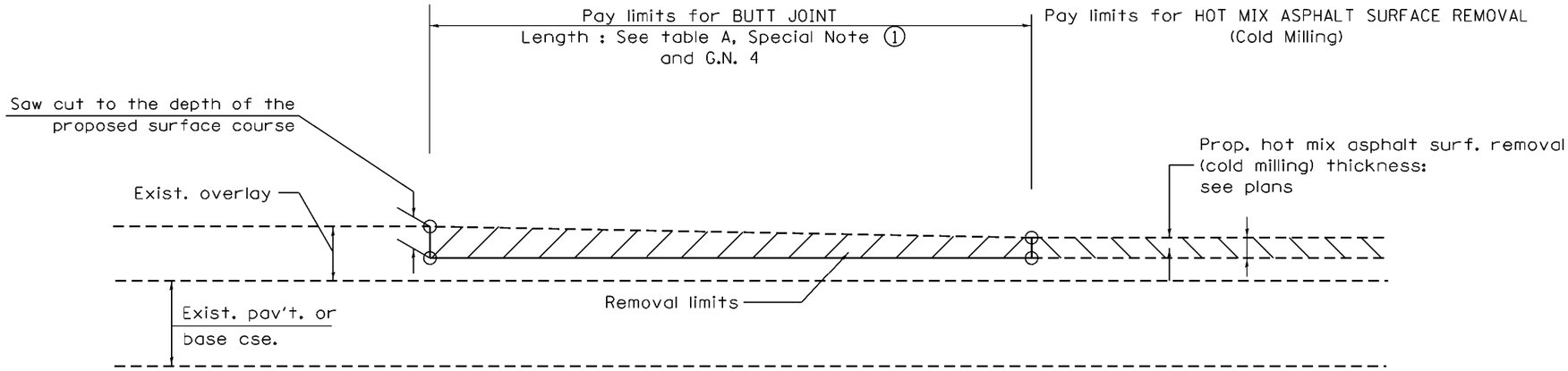

CASE 3 : HOT MIX ASPHALT SURFACE REMOVAL (COLD MILLING)

TIE-IN TO EXISTING BITUMINOUS TAPER

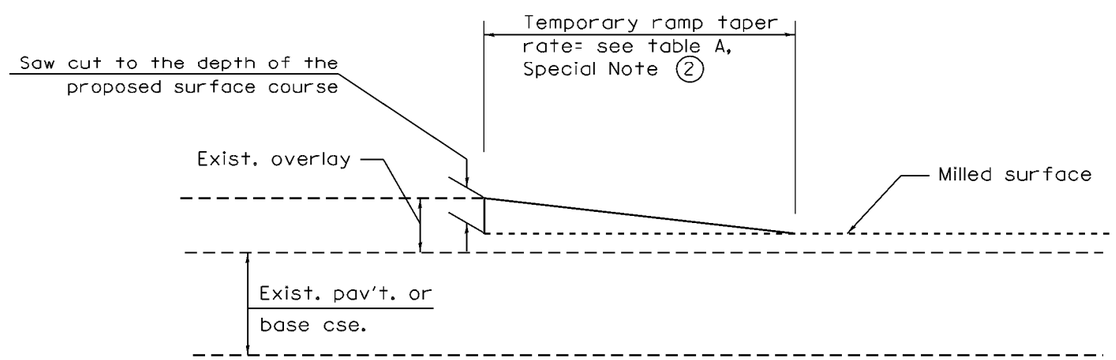

DETAIL TEMPORARY RAMP

All dimensions are in inches (millimeters) unless otherwise noted.

STATE OF ILLINOIS
DEPARTMENT OF TRANSPORTATION

NOT TO SCALE

BUTT JOINTS

SHT. 2 OF 3
CADD STD. 406101-D4

F.A.I RTE.	SECTION	COUNTY	TOTAL SHEETS	SHEET NO.
74	90-15(HB(1-4);VB;B)BP,BJR,BRR	TAZEWELL	192	188
		CONTRACT NO. 68F54		
FED. ROAD DIST. NO.	ILLINOIS	FED. AID PROJECT		

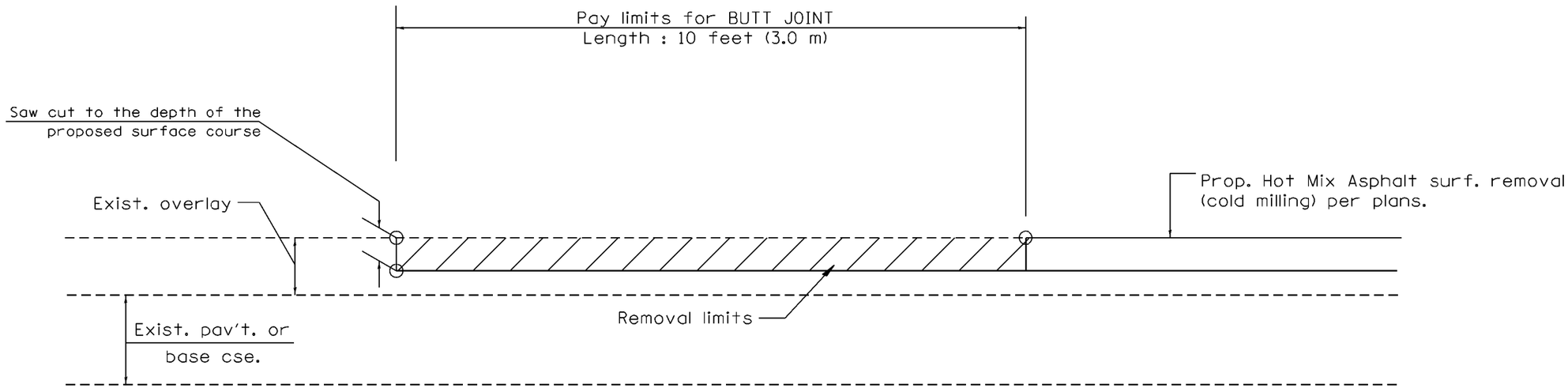

CASE 4 : SINGLE LIFT OVERLAY WITH EQUIVALENT DEPTH HOT MIX ASPHALT SURFACE REMOVAL (COLD MILLING) TIE-IN TO EXISTING BITUMINOUS TAPER

All dimensions are in inches (millimeters) unless otherwise noted.

STATE OF ILLINOIS
DEPARTMENT OF TRANSPORTATION

BUTT JOINTS

NOT TO SCALE

SHT. 3 OF 3
CADD STD. 406101-D4

F.A.I RTE.	SECTION	COUNTY	TOTAL SHEETS	SHEET NO.
74	90-15(HB(1-4);VB;B)BP,BJR,BRR	TAZEWELL	192	189
		CONTRACT NO. 68F54		
FED. ROAD DIST. NO.	ILLINOIS	FED. AID PROJECT		

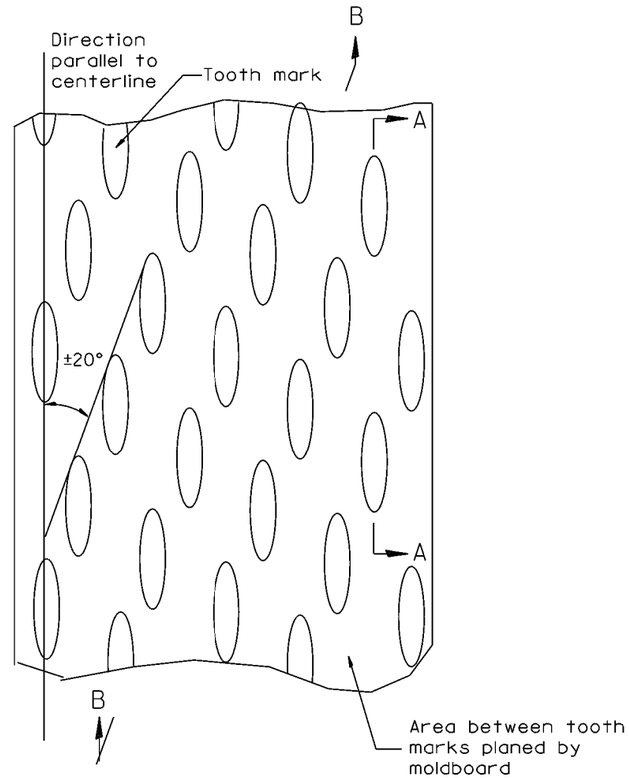

PLAN

General notes:

1. Coldmilling shall consist of two processes: Cutting with carbide teeth mounted on a rotating drum, and planing with a moldboard mounted immediately behind the cutting drum.

2. Other similar patterns will be acceptable if they consist of a smooth, flat, planed surface interspersed with a pattern of discontinuous longitudinal striations.

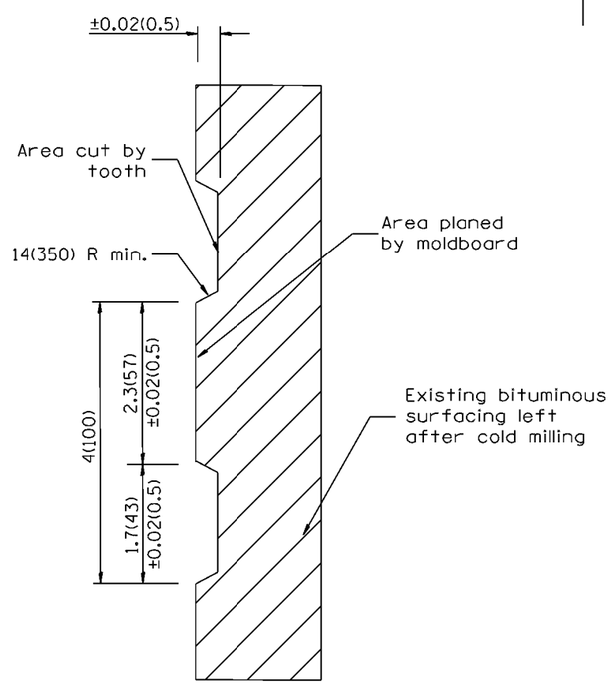

SECTION A-A

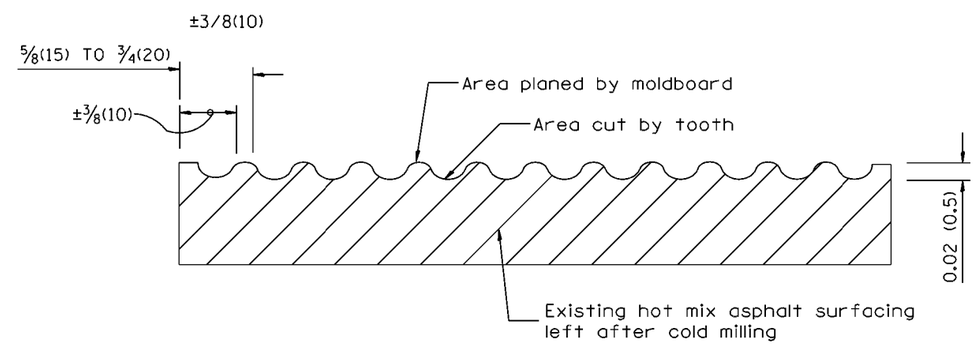

SECTION B-B PROJECTED
PERPENDICULAR TO CENTERLINE

All dimensions are in inches (millimeters) unless otherwise noted.

01-01-97	RENUM. C-104.01, NEW REVISION BOX	T.P.
04-20-98	REMOVED MILLING DETAIL FROM STANDARD	J.A.
09-08-98	CORRECT NOTE LEADER PLACEMENT	R.W.
10-16-06	REVISED TO 2007 SPEC.	M.A.

STATE OF ILLINOIS
DEPARTMENT OF TRANSPORTATION

HOT MIX ASPHALT SURFACE REMOVAL (COLD MILLING)

NOT TO SCALE

CADD STD. 440001-D4

F.A.I RTE.	SECTION	COUNTY	TOTAL SHEETS	SHEET NO.
74	90-15(HB(1-4);VB;BJ)BP,BJR,BRR	TAZEWELL	192	190
		CONTRACT NO. 68F54		
FED. ROAD DIST. NO.	ILLINOIS	FED. AID PROJECT		

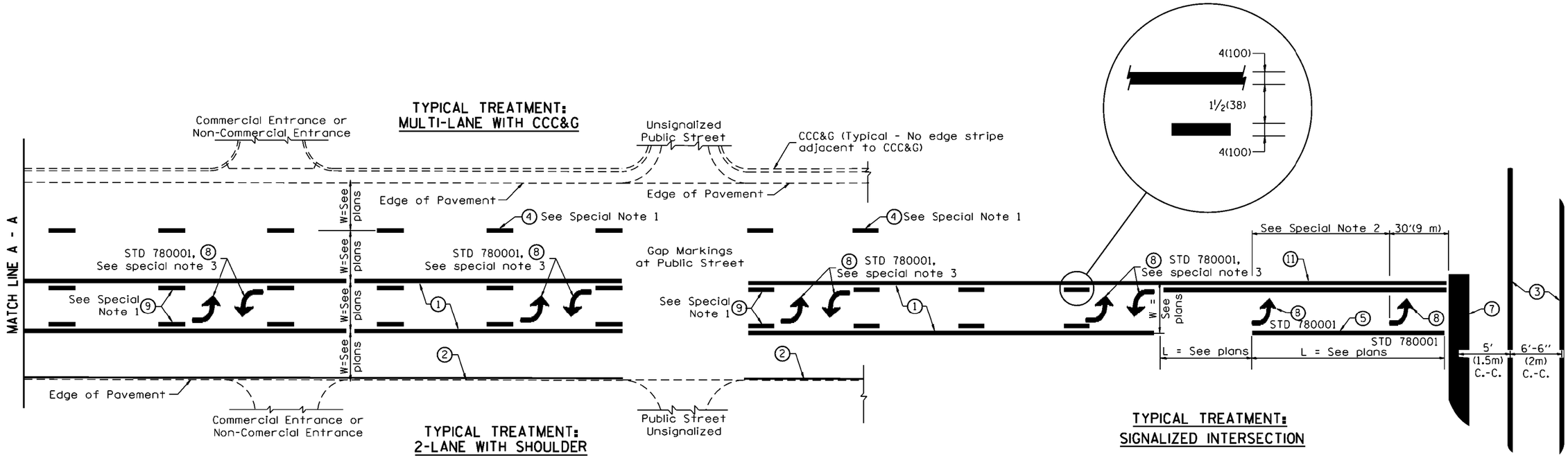

FLUSH PAVED MEDIAN: TWO-WAY LEFT TURN LANE WITH ONE-WAY LEFT TURN LANE AT SIGNALIZED INTERSECTION

TYPICAL PAVEMENT MARKING LEGEND

(Note: This is a District Standard Legend. Some elements may not apply to specific project.)

1. 4(100) Solid (Yellow)
2. 4(100) Solid (White)
3. 2-6(150) Crosswalk @ 6'-6" (2m)min C.-C. (White)
   2-8(200) Crosswalk @ 6'-6" (2m)min C.-C. (White) (When traffic signals are present.)
4. 6(150) Skip-Dash (White) — 10' (3.05m) / 30' (9.14m) / 10' (3.05m) (See Special Note 1)
5. 8(200) Solid (White)
6. 12(300) Diagonal (White) (Item 6 is shown on Std. 780001)
7. 24(600) Stop Bar (White)
8. Letters & Arrows — 33' (10m) (See Std. 780001 and Special Notes 2 & 3)
9. 4(100) Skip-Dash (Yellow) — 10' (3.05m) / 30' (9.14m) / 10' (3.05m) (See Special Note 1)
10. 12(300) Diagonal (Yellow) (See Table A) — 45°
11. 4(100) Double Solid (Yellow) — 11(280) C.-C. — See Table A

SPECIAL NOTES

1. Skip-Dash markings will be centered between both ends of city blocks and shall be placed in alignment transversely across the pavement.
2. The following shall apply to arrows located in one-way left turn lanes:
   A. A minimum of two (2) arrows is required.
   B. The maximum spacing between arrows is 80' (24 m).
   C. Arrows shall be evenly spaced if three (3) or more are required.
3. The following shall apply to arrow pairs located in two-way left turn lanes:
   A. A minimum of two (2) arrow pairs is required.
   B. The maximum spacing between arrow pairs is 200' (61 m).
   C. Arrow pairs shall be evenly spaced if three (3) or more are required.
   D. The spacing between Bi Directional Left Turn Arrows is 33' (10 m).

GENERAL NOTES

1. Refer to State Standard 780001 for additional Pavement Markings including letters & arrows.
2. See Plans for Pavement Markings adjacent to curbed islands and medians, and through lane reductions.
3. Refer to Article 780.13 for letter, number and symbol areas (sq. ft.)
4. Areas are grooved 1" beyond each edge for the following symbols:
   Through Arrow= 14.8 sq. ft.
   Large Left or Right Arrow= 21.9 sq. ft.
   2 Arrow Combination Left (or Right) and Through= 34.9 sq. ft.
   Wrong Way Arrow= 29.5 sq. ft.
   Railroad Crossing Symbol= 69.8 sq. ft.
   (For further information, refer to BDE Special Provision: Grooving for Recessed Pavement Markings)

01-01-97	RENUM. F-8.03. NEW REVISION BOX	T.P.	10-16-06	REVISED TO 2007 SPEC.	
02-07-97	ADD BI DIRECTIONAL DIMENSION	J.A.	2/29/16	ADDED GROOVING AREAS	R.D.
10-97	CORRECT BI DIRECTIONAL DIMENSION	J.A.	07-16-19	SPELLING CORRECTIONS	R.D.
08-02	ADD CROSSWALK DMNS. WITH T.S.	M.A.			

STATE OF ILLINOIS
DEPARTMENT OF TRANSPORTATION

TYPICAL PAVEMENT MARKINGS

NOT TO SCALE

SHT. 1 OF 2
CADD STD. 780001-D4

F.A.I RTE.	SECTION	COUNTY	TOTAL SHEETS	SHEET NO.
74	90-15(HB(1-4);VB;B)BP,BJR,BRR	TAZEWELL	192	191

CONTRACT NO. 68F54

FED. ROAD DIST. NO. | ILLINOIS | FED. AID PROJECT

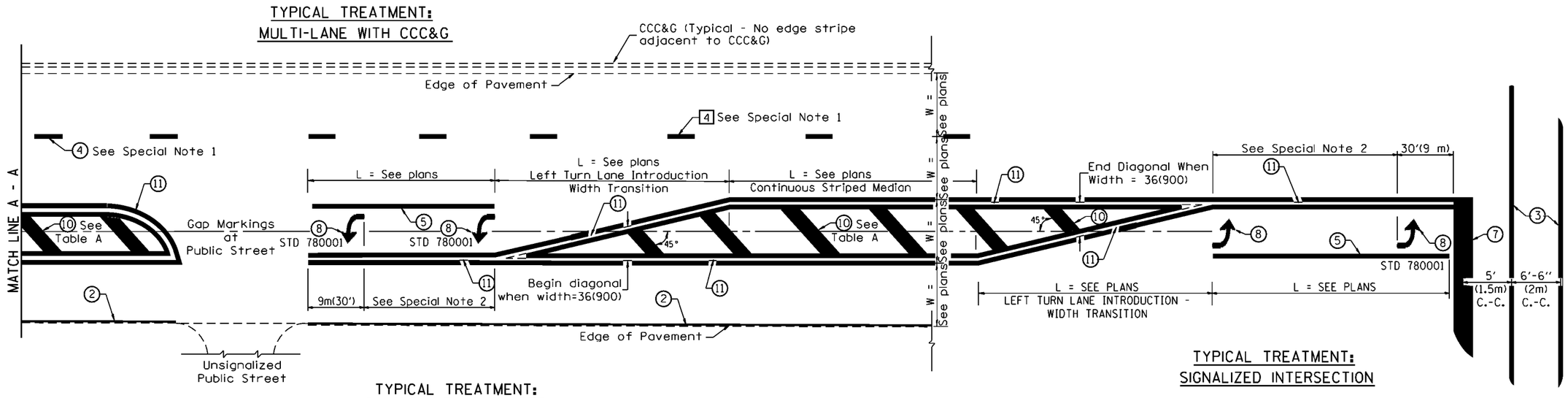

FLUSH PAVED MEDIAN: RESTRICTED LEFT TURN LANE

TABLE A

RECOMMENDED SPACING BETWEEN DIAGONAL LINES

SPEED LIMIT RANGE	CONTINUOUS	INTERSECTION CHANNELIZATION (Includes Width Transitions for Median and Left Turn Lane Introductions)
Less Than 30 mph (50 km/h)	50' (15m)	15' (5m)
30 - 45 mph (50 - 70 km/h)	75' (23m)	20' (6m)
Over 45 mph (70 km/h)	150' (46m)	30' (9m)

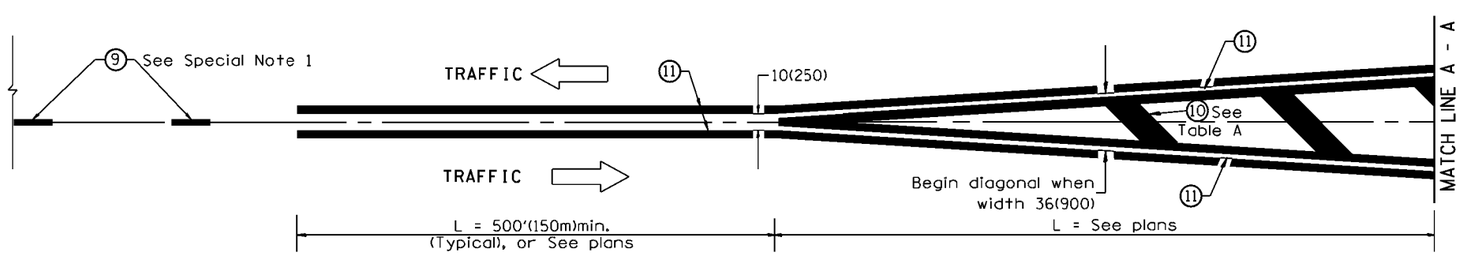

MEDIAN INTRODUCTION - WIDTH TRANSITIONS

All dimensions are in inches (millimeters) unless otherwise noted.

STATE OF ILLINOIS
DEPARTMENT OF TRANSPORTATION

TYPICAL PAVEMENT MARKINGS

NOT TO SCALE

SHT. 2 OF 2
CADD STD. 780001-D4

F.A.I RTE.	SECTION	COUNTY	TOTAL SHEETS	SHEET NO.
74	90-15(HB(1-4);VB;B)BP,BJR,BRR	TAZEWELL	192	192
		CONTRACT NO. 68F54		
FED. ROAD DIST. NO.	ILLINOIS	FED. AID PROJECT		