01–15–2021 LETTING ITEM 179

F.A.I. RTE.	SECTION	COUNTY	TOTAL SHEETS	SHEET NO.
74	90-15[HB(1-4);VB;B]BP,BJR,BRR	TAZEWELL	192*	1
	ILLINOIS	CONTRACT NO. 68F54		

* 192 + 1 = 193 TOTAL SHEETS

FOR INDEX OF SHEETS, SEE SHEET NO. 2

STATE OF ILLINOIS
DEPARTMENT OF TRANSPORTATION

PROPOSED
HIGHWAY PLANS

FAI 74 (I–74)
SECTION 90–15[HB(1–4);VB;B]BP,BJR,BRR
PROJECT NHPP–7J5Q(586)
TAZEWELL COUNTY

C–94–068–20

HIGHWAY STANDARDS:

000001–08
001001–02
442101–09
630001–12
630301–09
631031–17
701101–05
701106–02
701301–04
701311–03
701400–10
701401–12
701402–12
701426–09
701901–08
704001–08
725001–01
780001–05
782006–01
B.L.R. 21–9

D-94-044-20

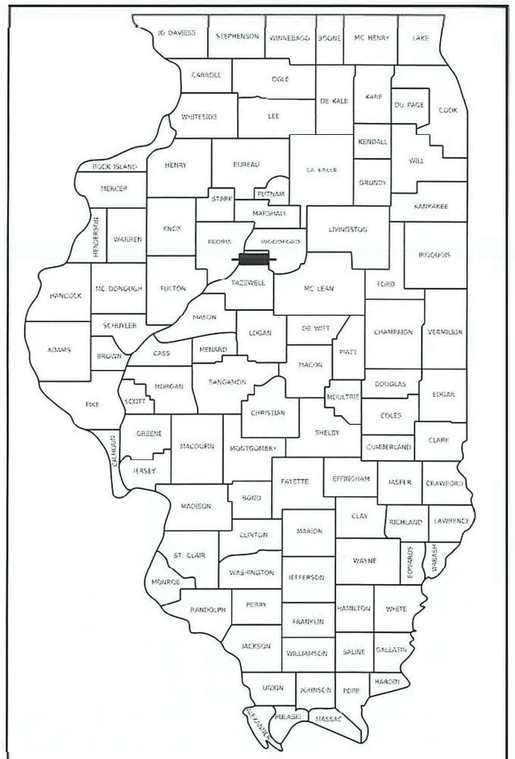

LOCATION OF SECTION INDICATED THUS:–

PROJECT LIMITS

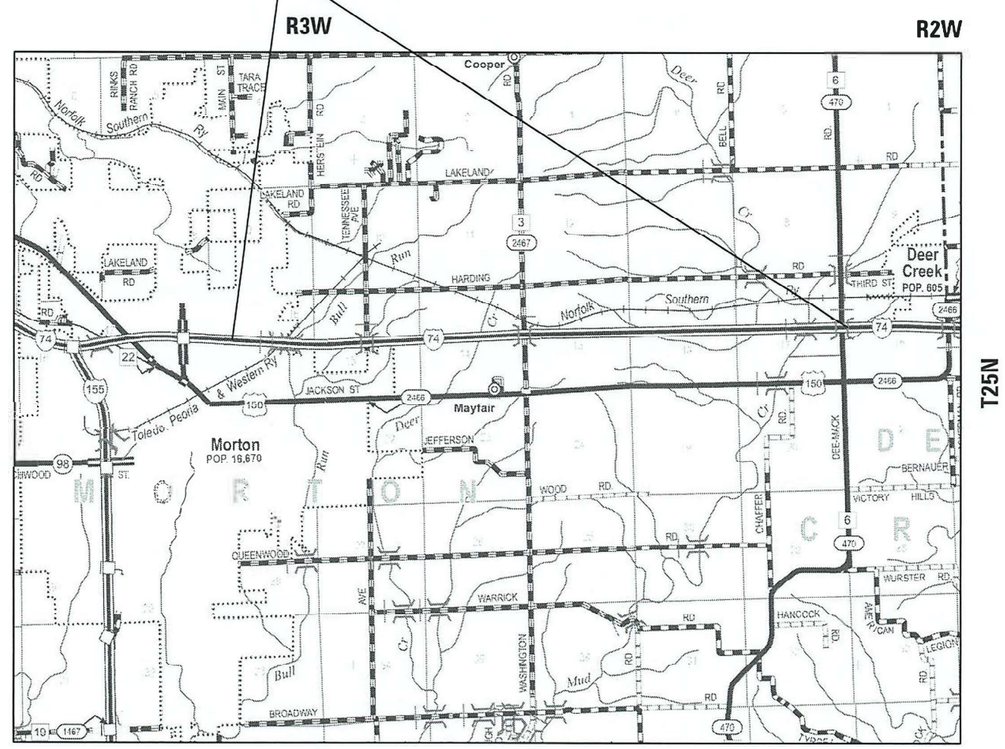

ADT 23900 (2019)
MU 17.6%
SU 3.0%

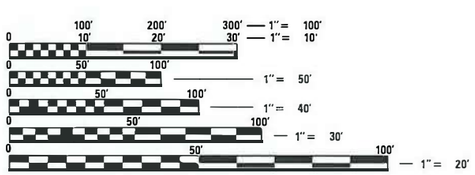

FULL SIZE PLANS HAVE BEEN PREPARED USING STANDARD ENGINEERING SCALES. REDUCED SIZED PLANS WILL NOT CONFORM TO STANDARD SCALES. IN MAKING MEASUREMENTS ON REDUCED PLANS, THE ABOVE SCALES MAY BE USED.

J.U.L.I.E.
JOINT UTILITY LOCATION INFORMATION FOR EXCAVATORS
1–800–892–0123
OR 811

PROJECT DESCRIPTION:
THIS PROJECT INCLUDES STRUCTURE IMPROVEMMENTS TO TEN(10) EXISTING STRUCTURES WITHIN THE PROPOSED PROJECT LIMITS. IN GENERAL, THE STRUCTURE WORK INCLUDES BRIDGE PAINTING, BRIDGE DECK SCARIFICATION AND OVERLAY, JOINT REPLACEMENT, BEARING REPLACEMENT, SLOPEWALL REPAIR, SUBSTRUCTURE REPAIR, AND OTHER RELATED WORK.

STATE OF ILLINOIS
DEPARTMENT OF TRANSPORTATION

SUBMITTED October 29 2020
REGIONAL ENGINEER
December 4, 2020
ENGINEER OF DESIGN AND ENVIRONMENT
December 4, 2020
DIRECTOR OF HIGHWAYS PROJECT IMPLEMENTATION

PROJECT ENGINEER: RICH DOTSON (309)671–3455
PROJECT MANAGER: NICOLE FAYANT / ARMARIS AYALA DIAZ (309)671–3473

CATALOG NO. 035832–01D
CONTRACT NO. 68F54

GROSS LENGTH = 29038 FT. = 5.500 MILES
NET LENGTH = 1286 FT. = 0.244 MILE

PRINTED BY THE AUTHORITY OF THE STATE OF ILLINOIS

REV. 12/7/20 REV. 11/23/20 REV. 11/17/20

INDEX OF SHEETS

GENERAL NOTES

COMMITMENTS

Commitments are not to be altered without the written approval of all parties to which the commitment was made.

No commitments have been made on this contract.

POLYMERIZED BITUMINOUS MATERIALS (TACK COAT) RATES

SURFACE TYPE	RESIDUAL RATE
Milled (HMA or PCC)	0.08 lb /sq ft
Existing Pavement	0.08 lb /sq ft
Fog Coat (between lifts)	0.08 lb /sq ft

BUTT JOINT CUTTING TIME RESTRICTION

Butt joints shall not be milled more than three (3) days prior to placement of the HMA surface course.

ENVIRONMENTAL REVIEWS

Prior to the use of any proposed borrow areas, use areas (temporary access roads, detours, run–arounds, etc.) and/or waste areas, the Contractor shall file the required environmental resource request surveys according to Section 107.22 of the Standard Specifications. These surveys are required in order for the Department to conduct cultural and biological resource surveys for the proposed site.

The required environmental resource documentation shall include the following:

* BDE Form 2289 (Borrow Site Review)
* BDE Form 2290 (Waste/Use Area Review)
* A location map showing the size limits and location of the use area
* Color photographs depicting the use area
* Borrow Area Entry Agreement form – D4 PI0101

Prior to any waste materials being removed from the construction site the required environmental resource surveys shall be obtained and filed by the Contractor. Excess waste products removed from the construction site shall be disposed of as required in Section 202.03 of the Standard Specifications.

Any protruding metal bars shall be removed prior to the disposal of broken concrete at approved disposal sites.

Please note that a minimum of four weeks shall be allowed for the District to obtain the required waste site environmental clearances and six weeks for the required borrow site environmental clearances.

SECURING DRAINAGE STRUCTURE GRATES

Prior to routing traffic onto the shoulders as shown in the staging plans, the Contractor shall secure gratings on shoulder inlets as directed by the Engineer. This work will not be paid for separately, but shall be included in the cost of the traffic control pay item.

ADDITIONAL SUPPLEMENTAL TRAFFIC CONTROL

The Department reserves the right at any time to add additional Traffic Control Systems or devices within the active contract limits, by means of an additional contract. All terms of Article 105.08 of the Standard Specifications shall be followed by each Contractor.

HOT–MIX ASPHALT MIXTURE REQUIREMENTS

Mixture Use(s):	SURFACE COURSE 2" (Approach)	BINDER COURSE 2" (Approach)	SHOULDER SURFACE 2"	SHOULDER (Lower 4" Lift)
AC/PG:	PG 64–22	PG 64–22	PG 64–22	PG 64–22
Design Air Voids:	4.0% AT N=70	4.0% AT N=70	4.0% AT N=70	4.0% AT N=70
Mixture Composition: (Gradation Mixture):	IL 9.5	IL 9.5	IL 9.5	IL 19.0
Friction Aggregate:	Mixture D	Mixture D	Mixture D	N.A.
Quality Management:	QCQA	QCQA	QCQA	QCQA

Notes:

1) For design purposes, mixture weight for all mixes is determined to be 112.0 lb./s.y./in., unless otherwise noted.

PROJECT SPECIFIC NOTES

The existing bridge approach drain details (for information only) provided in the plans detail the existing inlets in the approach pavements. The frames and grates of these inlets are to be adjusted.

				CONSTRUCTION CODE							
				90/10	90/10	90/10	90/10	90/10	90/10	90/10	90/10
				FED./STATE	FED./STATE	FED./STATE	FED./STATE	FED./STATE	FED./STATE	FED./STATE	FED./STATE
				0047	0047	0047	0013	0047	0047	0013	0013
CODE NO.	ITEM	UNIT	TOTAL QUANTITY	SN 090-0019 SN 090-0020	SN 090-0021 SN 090-0022	SN 090-0023	SN 090-0024	SN 090-0084	SN 090-0075	SN 090-0077	SN 090-2005
20200500	EARTH EXCAVATION (WIDENING)	CU YD	27	10	10	5	2				
40600295	POLYMERIZED BITUMINOUS MATERIALS (TACK COAT)	POUND	12799	4371	4147	2158	2123				
40600982	HOT - MIX ASPHALT SURFACE REMOVAL - BUTT JOINT	SQ YD	3341	1132	1043	583	583				
40602985	HOT-MIX ASPHALT BINDER COURSE, IL-9.5, N70	TON	9			9					
40604062	HOT-MIX ASPHALT SURFACE COURSE, IL-9.5, MIX "D", N70	TON	216	72	72	36	36				
42001300	PROTECTIVE COAT	SQ YD	5658	1748	1888	894.5	894.5	71	77	85	
44000157	HOT - MIX ASPHALT SURFACE REMOVAL, 2 "	SQ YD	876	302	303	135	136				
44000173	HOT - MIX ASPHALT SURFACE REMOVAL, 6"	SQ YD	6739	2318	2207	1099	1115				
44201053	CLASS B PATCHES, TYPE IV, 17 INCH	SQ YD	27				27				
44201055	CLASS B PATCHES, TYPE II, 17 INCH	SQ YD	70	24	16	8	22				
44201057	CLASS B PATCHES, TYPE III, 17 INCH	SQ YD	64	32		16	16				
44201299	DOWEL BARS 1 1/2"	EACH	270	100	40	40	90				
44213200	SAW CUTS	FOOT	698	264	96	108	230				
44213204	TIE BARS 3/4"	EACH	7				7				

MODEL: Default
FILE NAME: S:\GEN\WINWORD\STD&PLNS\Squad03\-74 3R Morton Ave to Woodford Co\Drawings\CADsheets\68F54\68F54 Proposed Staging Sheets.dgn

USER NAME = diazaa	DESIGNED -	REVISED -
	DRAWN -	REVISED -
PLOT SCALE = 100.0000 ' / in.	CHECKED -	REVISED -
PLOT DATE = 10/29/2020	DATE -	REVISED -

STATE OF ILLINOIS
DEPARTMENT OF TRANSPORTATION

SUMMARY OF QUANTITIES

SCALE: SHEET OF SHEETS STA. TO STA.

F.A.I. RTE.	SECTION	COUNTY	TOTAL SHEETS	SHEET NO.
74	90-15(HB(1-4);VB;B)BP,BJR,BRR	TAZEWELL	192	4
		CONTRACT NO. 68F54		
	ILLINOIS	FED. AID PROJECT		

REV. 12/7/20

CODE NO.	ITEM	UNIT	TOTAL QUANTITY	CONSTRUCTION CODE							
				90/10	90/10	90/10	90/10	90/10	90/10	90/10	90/10
				FED./STATE	FED./STATE	FED./STATE	FED./STATE	FED./STATE	FED./STATE	FED./STATE	FED./STATE
				0047	0047	0047	0013	0047	0047	0013	0013
				SN 090-0019 SN 090-0020	SN 090-0021 SN 090-0022	SN 090-0023	SN 090-0024	SN 090-0084	SN 090-0075	SN 090-0077	SN 090-2005
48102100	AGGREGATE WEDGE SHOULDER, TYPE B	TON	79	26	27	11	15				
48203100	HOT - MIX ASPHALT SHOULDERS	TON	2522	868	821	414	419				
50102400	CONCRETE REMOVAL	CU YD	131.1	25	28.6	13.1	13.1	6.4	6.75	38.2	
50104650	SLOPE WALL REMOVAL	SQ YD	134			67	67				
50157300	PROTECTIVE SHIELD	SQ YD	483							483	
50300225	CONCRETE STRUCTURES	CU YD	36.3					10.6	11.9	13.8	
50300255	CONCRETE SUPERSTRUCTURE	CU YD	139.3	27.7	31	14.4	14.4	6.4	6.7	38.7	
50300260	BRIDGE DECK GROOVING	SQ YD	5096	1656	1740	850	850				
50500405	FURNISHING AND ERECTING STRUCTURAL STEEL	POUND	1600			800	800				
50800205	REINFORCEMENT BARS, EPOXY COATED	POUND	21,220	3000	4000	1500	1500	2380	2500	6340	
50800515	BAR SPLICERS	EACH	172	48	56	24	24		20		
51100300	SLOPE WALL 6 INCH	SQ YD	134			67	67				
52000025	PREFORMED JOINT SEAL 2"	FOOT	135	45		45	45				
52000030	PREFORMED JOINT SEAL 2 1/2	FOOT	280	135	100		45				

MODEL: Default
FILE NAME: S:\GEN\WINWORD\STD&PLNS\Squad03\-74 3R Morton Ave to Woodford Co\Drawings\CADsheets\68F54\68F54 Proposed Staging Sheets.dgn

USER NAME = diazaa	DESIGNED -	REVISED -
	DRAWN -	REVISED -
PLOT SCALE = 100.0000 ' / in.	CHECKED -	REVISED -
PLOT DATE = 10/29/2020	DATE -	REVISED -

STATE OF ILLINOIS
DEPARTMENT OF TRANSPORTATION

SUMMARY OF QUANTITIES

SCALE: SHEET OF SHEETS STA. TO STA.

F.A.I. RTE.	SECTION	COUNTY	TOTAL SHEETS	SHEET NO.
74	90-15(HB(1-4);VB;B)BP,BJR,BRR	TAZEWELL	192	5
		CONTRACT NO. 68F54		
	ILLINOIS	FED. AID PROJECT		

REV. 12/7/20

	CODE NO.	ITEM	UNIT	TOTAL QUANTITY	CONSTRUCTION CODE							
					90/10	90/10	90/10	90/10	90/10	90/10	90/10	90/10
					FED./STATE	FED./STATE	FED./STATE	FED./STATE	FED./STATE	FED./STATE	FED./STATE	FED./STATE
					0047	0047	0047	0013	0047	0047	0013	0013
					SN 090-0019 SN 090-0020	SN 090-0021 SN 090-0022	SN 090-0023	SN 090-0024	SN 090-0084	SN 090-0075	SN 090-0077	SN 090-2005
	52000035	PREFORMED JOINT SEAL 2 3/4"	FOOT	145		100	45					
	52000110	PREFORMED JOINT STRIP SEAL	FOOT	816	181	198	93.5	93.5	61	65	124	
	52100010	ELASTOMERIC BEARING ASSEMBLY, TYPE 1	EACH	36			18	18				
	52100520	ANCHOR BOLTS, 1"	EACH	72			36	36				
	60300105	FRAMES AND GRATES TO BE ADJUSTED	EACH	8	4	4						
*	63000001	STEEL PLATE BEAM GUARD RAIL, TYPE A, 6 FOOT POSTS	FOOT	1250	500	487.5	262.5					
*	63100085	TRAFFIC BARRIER TERMINAL, TYPE 6	EACH	5	2	2	1					
*	63100167	TRAFFIC BARRIER TERMINAL, TYPE 1 (SPECIAL) TANGENT	EACH	5	2	2	1					
	63200310	GUARDRAIL REMOVAL	FOOT	1687	664	669	354					
	67000400	ENGINEER'S FIELD OFFICE, TYPE A	CAL MO	14	7			7				
	67100100	MOBILIZATION	L SUM	1	1							
	70100205	TRAFFIC CONTROL AND PROTECTION, STANDARD 701401	EACH	4	1	1	1	1				
	70100207	TRAFFIC CONTROL AND PROTECTION, STANDARD 701402	EACH	4	1	1	1	1				
	70103815	TRAFFIC CONTROL SURVEILLANCE	CAL DA	120	40	40	20	20				

*= SPECIALTY ITEM

MODEL: Default
FILE NAME: S:\GEN\WINWORD\STD&PLNS\Suuu\031-74 3R Morton Ave to Woodford Co\Drawings\CADsheets\68F54\68F54 Proposed Staging Sheets.dgn

USER NAME = diazaa	DESIGNED -	REVISED -
	DRAWN -	REVISED -
PLOT SCALE = 100.0000 ' / in.	CHECKED -	REVISED -
PLOT DATE = 10/29/2020	DATE -	REVISED -

STATE OF ILLINOIS
DEPARTMENT OF TRANSPORTATION

SUMMARY OF QUANTITIES

SCALE: SHEET OF SHEETS STA. TO STA.

F.A.I. RTE.	SECTION	COUNTY	TOTAL SHEETS	SHEET NO.
74	90-15(HB(1-4);VB;B)BP,BJR,BRR	TAZEWELL	192	6
		CONTRACT NO. 68F54		
	ILLINOIS	FED. AID PROJECT		

REV. 11/23/20

	CODE NO.	ITEM	UNIT	TOTAL QUANTITY	CONSTRUCTION CODE							
					90/10	90/10	90/10	90/10	90/10	90/10	90/10	90/10
					FED./STATE	FED./STATE	FED./STATE	FED./STATE	FED./STATE	FED./STATE	FED./STATE	FED./STATE
					0047	0047	0047	0013	0047	0047	0013	0013
					SN 090-0019 SN 090-0020	SN 090-0021 SN 090-0022	SN 090-0023	SN 090-0024	SN 090-0084	SN 090-0075	SN 090-0077	SN 090-2005
	70107025	CHANGEABLE MESSAGE SIGN	CAL DA	140	42			14	28	28	28	
	70300100	SHORT-TERM PAVEMENT MARKING	FOOT	328	112	112	52	52				
	70300150	SHORT TERM PAVEMENT MARKING REMOVAL	SQ FT	110	38	38	17	17				
	70300904	PAVEMENT MARKING TAPE, TYPE IV 4"	FOOT	85862	10168	10502	6200	5576	15745	31308	6363	
	70400100	TEMPORARY CONCRETE BARRIER	FOOT	4075	1125	1250	575	575		550		
	70400200	RELOCATE TEMPORARY CONCRETE BARRIER	FOOT	3525	1125	1250	575	575				
	70600250	IMPACT ATTENUATORS, TEMPORARY (NON-REDIRECTIVE), TEST LEVEL 3	EACH	12	2	2	1	1	2	2	2	
	70600350	IMPACT ATTENUATORS, RELOCATE (NON- REDIRECTIVE), TEST LEVEL 3	EACH	6	2	2	1	1				
*	72501000	TERMINAL MARKER - DIRECT APPLIED	EACH	5	2	2	1					
*	78009004	MODIFIED URETHANE PAVEMENT MARKING - LINE 4"	FOOT	10695	3577	3838	1640	1640				
*	78009006	MODIFIED URETHANE PAVEMENT MARKING - LINE 6"	FOOT	2284	418	450	333	83		500	500	
*	78200005	GUARDRAIL REFLECTORS, TYPE A	EACH	20	8	8	4					
	X0326444	SURFACE FILLER (SPECIAL)	GALLON	22		6	9	3.5	3.5			
	X0327980	PAVEMENT MARKING REMOVAL - WATER BLASTING	SQ FT	1344	268	311	195	70		250	250	
	X5030550	PROTECTIVE COAT (SPECIAL)	SQ YD	1420	415	561	222	222				

*= SPECIALTY ITEM

MODEL: Default
FILE NAME: S:\GEN\WINWORD\STD&PLNS\Squad03\-74 3R Morton Ave to Woodford Co\Drawings\CADsheets\68F54\68F54 Proposed Staging Sheets.dgn

USER NAME = diazaa	DESIGNED -	REVISED -
	DRAWN -	REVISED -
PLOT SCALE = 100.0000 ' / in.	CHECKED -	REVISED -
PLOT DATE = 10/29/2020	DATE -	REVISED -

STATE OF ILLINOIS
DEPARTMENT OF TRANSPORTATION

SUMMARY OF QUANTITIES

SCALE: SHEET OF SHEETS STA. TO STA.

F.A.I. RTE.	SECTION	COUNTY	TOTAL SHEETS	SHEET NO.
74	90-15(HB(1-4);VB;B)BP,BJR,BRR	TAZEWELL	192	7
		CONTRACT NO. 68F54		
	ILLINOIS	FED. AID PROJECT		

REV. 12/7/20 REV. 11/23/20

				CONSTRUCTION CODE							
				90/10	90/10	90/10	90/10	90/10	90/10	90/10	90/10
				FED./STATE	FED./STATE	FED./STATE	FED./STATE	FED./STATE	FED./STATE	FED./STATE	FED./STATE
				0047	0047	0047	0013	0047	0047	0013	0013
CODE NO.	ITEM	UNIT	TOTAL QUANTITY	SN 090-0019 SN 090-0020	SN 090-0021 SN 090-0022	SN 090-0023	SN 090-0024	SN 090-0084	SN 090-0075	SN 090-0077	SN 090-2005
X7010218	TRAFFIC CONTROL AND PROTECTION (SPECIAL)	EACH	3	1					1	1	
X7011800	TRAFFIC CONTROL AND PROTECTION, STANDARD BLR 21	L SUM	1					1			
X7030005	TEMPORARY PAVEMENT MARKING REMOVAL	SQ FT	28621	3389	3501	2067	1859	5248	10436	2121	
Z0001002	GUARDRAIL AGGREGATE EROSION CONTROL	TON	87	35	34	18					
Z0001899	JACK AND REMOVE EXISTING BEARINGS	EACH	36			18	18				
Z0001903	STRUCTURAL STEEL REMOVAL	POUND	240			120	120				
Z0001905	STRUCTURAL STEEL REPAIR	POUND	1050	710		70	70			200	
Z0003600	BEAM STRAIGHTENING	L SUM	1	1							
* Z0007101	CONTAINMENT AND DISPOSAL OF LEAD PAINT CLEANING RESIDUES NO.1	L SUM	1	1							
* Z0007102	CONTAINMENT AND DISPOSAL OF LEAD PAINT CLEANING RESIDUES NO.2	L SUM	1	1							
* Z0007103	CONTAINMENT AND DISPOSAL OF LEAD PAINT CLEANING RESIDUES NO.3	L SUM	1		1						
Z0007104	CONTAINMENT AND DISPOSAL OF LEAD PAINT CLEANING RESIDUES NO. 4	L SUM	1		1						
* Z0010501	CLEANING AND PAINTING STEEL BRIDGE NO. 1	L SUM	1	1							
Z0007105	CONTAINMENT AND DISPOSAL OF LEAD PAINT CLEANING RESIDUES NO. 5	L SUM	1			1					
* Z0010502	CLEANING AND PAINTING STEEL BRIDGE NO. 2	L SUM	1	1							
Z0007106	CONTAINMENT AND DISPOSAL OF LEAD PAINT CLEANING RESIDUES NO. 6	L SUM	1				1				
* Z0010503	CLEANING AND PAINTING STEEL BRIDGE NO. 3	L SUM	1		1						

*= SPECIALTY ITEM

MODEL: Default
FILE NAME: S:\GENWIN\WORD\STD&PLNS\Suua03\-74 3R Morton Ave to Woodland Co\Drawings\CADsheets\68F54\68F54 Proposed Staging Sheets.dgn

USER NAME = diazaa	DESIGNED -	REVISED -	
	DRAWN -	REVISED -	
PLOT SCALE = 100.0000 ' / in.	CHECKED -	REVISED -	
PLOT DATE = 10/29/2020	DATE -	REVISED -	

STATE OF ILLINOIS
DEPARTMENT OF TRANSPORTATION

SUMMARY OF QUANTITIES

SCALE: SHEET OF SHEETS STA. TO STA.

F.A.I. RTE.	SECTION	COUNTY	TOTAL SHEETS	SHEET NO.
74	90-15(HB(1-4);VB;B)BP,BJR,BRR	TAZEWELL	192	8
		CONTRACT NO. 68F54		
	ILLINOIS	FED. AID PROJECT		

REV. 12/7/20 REV. 11/23/20

	CODE NO.	ITEM	UNIT	TOTAL QUANTITY	CONSTRUCTION CODE							
					90/10	90/10	90/10	90/10	90/10	90/10	90/10	90/10
					FED./STATE	FED./STATE	FED./STATE	FED./STATE	FED./STATE	FED./STATE	FED./STATE	FED./STATE
					0047	0047	0047	0013	0047	0047	0013	0013
					SN 090-0019 SN 090-0020	SN 090-0021 SN 090-0022	SN 090-0023	SN 090-0024	SN 090-0084	SN 090-0075	SN 090-0077	SN 090-2005
*	Z0010504	CLEANING AND PAINTING STEEL BRIDGE NO. 4	L SUM	1		1						
*	Z0010505	CLEANING AND PAINTING STEEL BRIDGE NO. 5	L SUM	1			1					
*	Z0010506	CLEANING AND PAINTING STEEL BRIDGE NO. 6	L SUM	1				1				
	Z0012130	BRIDGE DECK SCARIFICATION 3/4"	SQ YD	6029	1957	2164	954	954				
	Z0012162	BRIDGE DECK MICROSILICA CONCRETE OVERLAY 2 1/4"	SQ YD	6029	1957	2164	954	954				
	Z0012754	STRUCTURAL REPAIR OF CONCRETE (DEPTH EQUAL TO OR LESS THAN 5 INCHES)	SQ FT	775.2	252.5	207.7	31.6	31.6	70.0		181.8	
	Z0012755	STRUCTURAL REPAIR OF CONCRETE (DEPTH GREATER THAN 5 INCHES)	SQ FT	47								47
	Z0013798	CONSTRUCTION LAYOUT	L SUM	1	0.2	0.2	0.1	0.1	0.1	0.1	0.1	0.1
	Z0016002	DECK SLAB REPAIR (FULL DEPTH, TYPE II)	SQ YD	2.4							2.4	
	Z0016200	DECK SLAB REPAIR (PARTIAL)	SQ YD	21.7							21.7	
	Z0018051	DRAINAGE SCUPPERS TO BE ADJUSTED	EACH	8	4	4						
	Z0073500	TEMPORARY SUPPORT SYSTEM	L SUM	1							1	
Ø	Z0076600	TRAINEES	HOUR	500	500							
Ø	Z0076604	TRAINEES - TRAINING PROGRAM GRADUATE	HOUR	500	500							

Ø 0042 *= SPECIALTY ITEM

MODEL: Default
FILE NAME: S:\GEN\WINWORD\STD&PLNS\Squad03\-74 3R Morton Ave to Woodland Co\Drawings\CADsheets\68F54\68F54 Proposed Staging Sheets.dgn

USER NAME = diazaa	DESIGNED -	REVISED -
	DRAWN -	REVISED -
PLOT SCALE = 100.0000 ' / in.	CHECKED -	REVISED -
PLOT DATE = 10/29/2020	DATE -	REVISED -

STATE OF ILLINOIS
DEPARTMENT OF TRANSPORTATION

SUMMARY OF QUANTITIES

SCALE: SHEET OF SHEETS STA. TO STA.

F.A.I. RTE.	SECTION	COUNTY	TOTAL SHEETS	SHEET NO.
74	90-15(HB(1-4);VB;B)BP,BJR,BRR	TAZEWELL	192	9
		CONTRACT NO. 68F54		
	ILLINOIS	FED. AID PROJECT		

REV. 12/7/20 REV. 11/23/20

HMA SCHEDULE

LOCATION		44000157 HOT-MIX ASPHALT SURFACE REMOVAL, 2" (SQ YD)	44000173 HOT-MIX ASPHALT SURFACE REMOVAL, 6" (SQ YD)	48102100 AGGREGATE WEDGE SHOULDER, TYPE B (TON)	48203100 HOT-MIX ASPHALT SHOULDERS (TON)	40600295 POLYMERIZED BITUMINOUS MATERIALS (TACK COAT) (POUND)	40600982 HMA SURFACE REMOVAL - BUTT JOINT (SQ YD)	40604062 HMA SURFACE COURSE, IL-9.5, MIX "D", N70 (TON)	40602985 HMA BINDER COURSE, IL-9.5, N70 (TON)
PRE-STAGE EB I-74									
SN 090-0019	LT STA. 629+75.00 TO STA. 632+95.00	35.6	180.0	0.4	64.5	284.8			
	RT STA. 629+75.00 TO STA. 632+95.00	35.6	374.0	4.0	129.7	564.2			
	LT STA. 635+10.00 TO STA. 639+00.00	43.3	195.0	4.9	70.4	312.0			
	RT STA. 635+10.00 TO STA. 639+00.00	43.3	450.8	4.9	156.3	680.3			
SN 090-0021	LT STA. 639+00.00 TO STA. 642+58.00	39.8	196.9	1.1	70.6	312.2			
	RT STA. 639+00.00 TO STA. 642+58.00	39.8	372.6	4.5	129.6	565.1			
	LT STA. 645+36.25 TO STA. 647+83.00	27.4	131.2	3.1	47.1	208.6			
	RT STA. 645+36.25 TO STA. 648+33.00	33.0	308.2	3.7	107.2	467.5			
SN 090-0023	LT STA. 900+69.00 TO STA. 904+05.00	37.3	190.2	0.2	68.1	300.8			
	RT STA. 900+69.00 TO STA. 903+89.00	35.6	396.4	4.0	137.2	596.4			
	LT STA. 906+15.00 TO STA. 908+64.00	27.7	132.9	3.1	47.8	211.3			
	RT STA. 906+00.00 TO STA. 909+14.00	34.9	380.0	4.0	131.6	572.3			
PRE-STAGE WB I-74				0.0					
SN 090-0020	LT STA. 630+11.50 TO STA. 633+10.00	33.2	343.1	3.8	119.0	517.9			
	RT STA. 630+61.50 TO STA. 633+10.00	27.6	132.3	3.1	47.6	210.4			
	LT STA. 635+24.00 TO STA. 639+00.00	41.8	437.9	4.7	151.8	660.6			
	RT STA. 635+24.00 TO STA. 639+00.00	41.8	204.9	0.8	73.5	325.1			
SN 090-0022	LT STA. 639+00.00 TO STA. 643+12.00	45.8	457.8	5.2	158.9	692.2			
	RT STA. 639+00.00 TO STA. 643+12.00	45.8	204.4	5.2	73.8	327.4			
	LT STA. 645+91.00 TO STA. 649+11.00	35.6	355.6	4.0	123.5	537.6			
	RT STA. 645+91.00 TO STA. 649+11.00	35.6	180.0	0.4	64.5	284.8			
SN 090-0024	LT STA. 901+25.00 TO STA. 904+40.50	35.1	385.6	4.0	133.5	580.6			
	RT STA. 901+75.00 TO STA. 904+24.50	27.7	133.7	3.1	48.0	212.5			
	LT STA. 906+50.00 TO STA. 909+70.00	35.6	405.5	4.0	140.2	609.6			
	RT STA. 906+34.00 TO STA. 909+70.00	37.3	190.0	4.2	68.0	300.4			
PAVEMENT TRANSITION EB I-74									
SN 090-0019	STA. 632+35.00 TO STA. 632+95.00				14.0	205.0	284.7	17.9	
	STA. 635+10.00 TO STA. 635+70.00				13.9	204.3	283.8	17.9	
SN 090-0021	STA. 641+98.00 TO STA. 642+58.00				10.5	183.0	254.1	17.9	
	STA. 645+36.25 TO STA. 645+96.25				10.7	184.2	255.8	17.9	
SN 090-0023	STA. 903+38.83 TO STA. 903+98.83				14.2	206.7	287.2	17.9	
	STA. 906+09.15 TO STA. 906+69.15				15.2	270.4	295.6	17.9	9.0
PAVEMENT TRANSITION WB I-74									
SN 090-0020	STA. 632+50.00 TO STA. 633+10.00				13.2	200.2	278.1	17.9	
	STA. 635+24.00 TO STA. 635+84.00				14.1	205.9	285.9	17.9	
SN 090-0022	STA. 642+52.00 TO STA. 643+12.00				11.9	192.0	266.7	17.9	
	STA. 645+91.00 TO STA. 646+51.00				11.9	192.0	266.7	17.9	
SN 090-0024	STA. 903+71.00 TO STA. 904+31.00				15.4	214.0	297.3	17.9	
	STA. 906+40.54 TO STA. 907+00.54				14.1	206.0	286.1	17.9	
SUB TOTAL - SN 090-0019=		158	1200	14	449	2251	568	36	
SUB TOTAL - SN 090-0020=		144	1118	12	419	2120	564	36	
SUB TOTAL - SN 090-0021=		140	1009	12	376	1921	510	36	
SUB TOTAL - SN 090-0022=		163	1198	15	445	2226	533	36	
SUB TOTAL - SN 090-0023=		135	1099	11	414	2158	583	36	9
SUB TOTAL - SN 090-0024=		136	1115	15	419	2123	583	36	
TOTAL =		876	6739	79	2522	12799	3341	216	9

MODEL: Default
FILE NAME: S:\GEN\VIN\WORD\STD&PLNS\Sua\d03\-74 3R Morton Ave to Woodland Cd\Drawings\CADsheets\68F54\68F54 Proposed Staging Sheets.dgn

USER NAME = diazaa	DESIGNED -	REVISED -
	DRAWN -	REVISED -
PLOT SCALE = 100.0000 ' / in.	CHECKED -	REVISED -
PLOT DATE = 10/29/2020	DATE -	REVISED -

STATE OF ILLINOIS
DEPARTMENT OF TRANSPORTATION

SCHEDULE OF QUANTITIES

SCALE: SHEET OF SHEETS STA. TO STA.

F.A.I. RTE.	SECTION	COUNTY	TOTAL SHEETS	SHEET NO.
74	90-15(HB(1-4):VB;B)BP,BJR,BRR	TAZEWELL	192	10
		CONTRACT NO. 68F54		
	ILLINOIS	FED. AID PROJECT		

EARTH EXCAVATION

LOCATION		20200500 EARTH EXCAVATION (WIDENING) CU YD
PRE-STAGE EB I-74		
SN 090-0019	LT STA. 630+90.00 TO STA. 632+95.00	3
	LT STA. 635+10.00 TO STA. 636+42.50	2
SN 090-0021	LT STA. 640+53.00 TO STA. 642+58.00	3
	LT STA. 645+36.25 TO STA. 646+68.00	2
SN 090-0023	LT STA. 901+84.00 TO STA. 904+05.00	3
	LT STA. 906+15.00 TO STA. 907+49.00	2
PRE-STAGE WB I-74		
SN 090-0020	RT STA. 631+76.50 TO STA. 633+10.00	2
	RT STA. 635+24.00 TO STA. 637+29.00	3
SN 090-0022	RT STA. 641+81.00 TO STA. 643+12.00	2
	RT STA. 645+91.00 TO STA. 647+96.00	3
SN 090-0024	RT STA. 902+90.00 TO STA. 904+24.50	2
	SUB TOTAL - SN 090-0019=	5
	SUB TOTAL - SN 090-0020=	5
	SUB TOTAL - SN 090-0021=	5
	SUB TOTAL - SN 090-0022=	5
	SUB TOTAL - SN 090-0023=	5
	SUB TOTAL - SN 090-0024=	2
TOTAL =		27

PAVEMENT PATCHING SCHEDULE

LOCATION		44201055 CLASS B PATCHES, TYPE II, 17 INCH SQ YD	44201057 CLASS B PATCHES, TYPE III, 17 INCH SQ YD	44201053 CLASS B PATCHES, TYPE IV, 17 INCH SQ YD	44213200 SAW CUTS FOOT	44201299 DOWEL BARS 1 1/2" EACH	44213204 TIE BARS 3/4" EACH
PAVEMENT TRANSITION EB I-74							
SN 090-0019	E STA. 635+10.00 TO STA. 635+70.00	8	32		168	60	
SN 090-0023	W STA. 903+38.83 TO STA. 903+98.83	8	16		108	40	
PAVEMENT TRANSITION WB I-74							
SN 090-0020	E STA. 635+24.00 TO STA. 635+84.00	16			96	40	
SN 090-0022	W STA. 642+52.00 TO STA. 643+12.00	16			96	40	
SN 090-0024	W STA. 903+71.00 TO STA. 904+31.00	22	16		154	60	
	E STA. 906+40.54 TO STA. 907+00.54			27	76	30	7
TOTAL =		70	64	27	698	270	7

GUARDRAIL SCHEDULE

LOCATION		63000001 STEEL PLATE BEAM GUARDRAIL, TYPE A, 6 FOOT POSTS FT	63100085 TRAFFIC BARRIER TERMINAL, TYPE 6 EACH	63100167 TRAFFIC BARRIER TERMINAL, TYPE 1 (SPECIAL)TANGENT EACH	63200310 GUARDRAIL REMOVAL FT	72501000 TERMINAL MARKER - DIRECT APPLIED EACH	78200005 GUARDRAIL REFLECTORS, TYPE A EACH	Z0001002 GUARDRAIL AGGREGATE EROSION CONTROL TON
I-74 EB								
SN 090-0019	LT STA. 630+08.28 TO STA. 633+32.65	237.5	1	1	339	1	4	17
SN 090-0021	LT STA. 639+85.87 TO STA. 643+10.23	237.5	1	1	339	1	4	17
SN 090-0023	LT STA. 900+83.89 TO STA. 904+33.25	262.5	1	1	354	1	4	18
I-74 WB								
SN 090-0020	RT STA. 634+87.48 TO STA. 638+36.84	262.5	1	1	325	1	4	18
SN 090-0022	RT STA. 645+38.74 TO STA. 648+75.60	250.0	1	1	330	1	4	17
	SUB TOTAL - SN 090-0019=	237.5	1	1	339	1	4	17
	SUB TOTAL - SN 090-0020=	262.5	1	1	325	1	4	18
	SUB TOTAL - SN 090-0021=	237.5	1	1	339	1	4	17
	SUB TOTAL - SN 090-0022=	250.0	1	1	330	1	4	17
	SUB TOTAL - SN 090-0023=	262.5	1	1	354	1	4	18
TOTAL =		1250	5	5	1687	5	20	87

FRAMES AND GRATES

LOCATION		60300105 FRAMES AND GRATES TO BE ADJUSTED EACH
PAVEMENT TRANSITION EB I-74		
SN 090-0019	LT & RT STA. 632+35.00 TO STA. 632+95.00	2
SN 090-0021	LT & RT STA. 645+36.25 TO STA. 645+96.25	2
PAVEMENT TRANSITION WB I-74		
SN 090-0020	LT & RT STA. 632+50.00 TO STA. 633+10.00	2
SN 090-0022	LT & RT STA. 645+91.00 TO STA. 646+51.00	2
TOTAL =		8

TRAFFIC CONTROL SCHEDULE

LOCATION		70100205	70100207	70103815	X7011800	X7010218	70107025	67000400
		TRAFFIC CONTROL AND PROTECTION, STANDARD 701401	TRAFFIC CONTROL AND PROTECTION, STANDARD 701402	TRAFFIC CONTROL SURVEILLANCE	TRAFFIC CONTROL AND PROTECTION, STANDARD BLR 21	TRAFFIC CONTROL AND PROTECTION, (SPECIAL)	CHANGEABLE MESSAGE SIGN	ENGINEER'S FIELD OFFICE, TYPE A
		EACH	EACH	CAL DA	L SUM	EACH	CAL DA	CAL MO
EB I-74	SN 090-0019	1	1	20		1	42	7
	SN 090-0021			20				
	SN 090-0023	1	1	20				
WB I-74	SN 090-0020			20				
	SN 090-0022	1	1	20				
	SN 090-0024	1	1	20			14	7
TENNESSEE AVE.	SN 090-0084				1		28	
WASHINGTON RD.	SN 090-0075					1	28	
DEE-MAC RD.	SN 090-0077					1	28	
TOTALS =		4	4	120	1	3	140	14

NOTE: TC&P, (SPECIAL) FOR SN 090-0019 IS FOR THE TEMPORARY CLOSURE OF MAIN ST. BELOW THE STRUCTURE.

PREFORMED JOINT SEAL SCHEDULE

LOCATION	52000025	52000030	52000035
	PREFORMED JOINT SEAL 2"	PREFORMED JOINT SEAL 2 1/2"	PREFORMED JOINT SEAL 2 3/4"
	FOOT	FOOT	FOOT
SN 090-0019	45	45	
SN 090-0020		90	
SN 090-0021		100	
SN 090-0022			100
SN 090-0023	45		45
SN 090-0024	45	45	
TOTALS	135	280	145

NOTE: THESE PREFORMED JOINT SEALS ARE TO BE INSTALLED BETWEEN THE APPROACH PAVEMENT AND THE CONNECTOR PAVEMENT AFTER THE MICROSILICA OVERLAY IS COMPLETED.

TEMPORARY CONCRETE BARRIER & TEMPORARY IMPACT ATTENUATOR SCHEDULE

LOCATION			70400100	70400200	70600250	70600350
			TEMPORARY CONCRETE BARRIER	RELOCATE TEMPORARY CONCRETE BARRIER	IMPACT ATTENUATORS, TEMPORARY (NON-REDIRECTIVE), TEST LEVEL 3	IMPACT ATTENUATORS, RELOCATE (NON-REDIRECTIVE), TEST LEVEL 3
			FT	FT	EACH	EACH
STAGE I - I-74						
EB I-74	SN 090-0019	STA. 630+10.00 TO STA. 635+72.50	562.5		1	
EB I-74	SN 090-0021	STA. 639+73.00 TO STA. 645+98.00	625.0		1	
EB I-74 UNDER	SN 090-0084	STA. 684+72.00 TO STA. 687+47.00	275.0		1	
EB I-74 UNDER	SN 090-0075	STA. 763+02.00 TO STA. 765+77.00	275.0		1	
EB I-74	SN 090-0023	STA. 901+04.00 TO STA. 906+79.00	575.0		1	
EB I-74 UNDER	SN 090-0077	STA. 920+48.00 TO STA. 923+23.00	275.0		1	
WB I-74	SN 090-0020	STA. 632+46.50 TO STA. 638+09.00	562.5		1	
WB I-74	SN 090-0022	STA. 642+51.00 TO STA. 648+76.00	625.0		1	
WB I-74 UNDER	SN 090-0084	STA. 686+32.00 TO STA. 689+07.00	275.0		1	
WB I-74 UNDER	SN 090-0075	STA. 764+57.00 TO STA. 767+32.00	275.0		1	
WB I-74	SN 090-0024	STA. 903+60.00 TO STA. 909+35.00	575.0		1	
WB I-74 UNDER	SN 090-0077	STA. 921+98.00 TO STA. 924+73.00	275.0		1	
STAGE II - I-74						
EB I-74	SN 090-0019	STA. 630+10.00 TO STA. 635+72.50		562.5		1
EB I-74	SN 090-0021	STA. 639+73.00 TO STA. 645+98.00		625.0		1
EB I-74	SN 090-0023	STA. 901+04.00 TO STA. 906+79.00		575.0		1
WB I-74	SN 090-0020	STA. 632+46.50 TO STA. 638+09.00		562.5		1
WB I-74	SN 090-0022	STA. 642+51.00 TO STA. 648+76.00		625.0		1
WB I-74	SN 090-0024	STA. 903+60.00 TO STA. 909+35.00		575.0		1
		SUB TOTAL - SN 090-0019=	562.5	562.5	1	1
		SUB TOTAL - SN 090-0020=	562.5	562.5	1	1
		SUB TOTAL - SN 090-0021=	625.0	625.0	1	1
		SUB TOTAL - SN 090-0022=	625.0	625.0	1	1
		SUB TOTAL - SN 090-0023=	575.0	575.0	1	1
		SUB TOTAL - SN 090-0024=	575.0	575.0	1	1
		SUB TOTAL - SN 090-0084=	550.0		2	
		SUB TOTAL - SN 090-0075=	550.0		2	
		SUB TOTAL - SN 090-0077=	550.0		2	
		TOTALS =	5175	3525	12	6

TEMPORARY PAVEMENT MARKING SCHEDULE

LOCATION			70300904 PAVEMENT MARKING TAPE, TYPE IV 4"	X7030005 TEMPORARY PAVEMENT MARKING REMOVAL
			FT	SQ FT
STAGE I - EB I-74				
SN 090-0019	RT	STA. 614+85.00 TO STA. 624+85.00	1000.0	333.3
	RT	STA. 624+85.00 TO STA. 629+85.00	500.0	166.7
	RT & LT	STA. 629+85.00 TO STA. 631+60.00	350.0	116.7
	RT & LT	STA. 631+60.00 TO STA. 635+72.50	825.0	275.0
	RT & LT	STA. 635+72.50 TO STA. 636+42.50	140.0	46.7
SN 090-0021	RT & LT	STA. 636+42.50 TO STA. 640+53.00	821.0	273.7
	RT & LT	STA. 640+53.00 TO STA. 641+23.00	140.0	46.7
	RT & LT	STA. 641+23.00 TO STA. 645+98.00	950.0	316.7
	RT & LT	STA. 645+98.00 TO STA. 647+73.00	350.0	116.7
SN 090-0084	RT	STA. 647+73.00 TO STA. 670+47.00	2274.0	758.0
	RT	STA. 670+47.00 TO STA. 680+47.00	1000.0	333.3
	RT	STA. 680+47.00 TO STA. 685+47.00	500.0	166.7
	RT	STA. 685+47.00 TO STA. 687+97.00	250.0	83.3
SN 090-0075	RT	STA. 687+97.00 TO STA. 748+77.00	6080.0	2026.7
	RT	STA. 748+77.00 TO STA. 758+77.00	1000.0	333.3
	RT	STA. 758+77.00 TO STA. 763+77.00	500.0	166.7
	RT	STA. 763+77.00 TO STA. 766+27.00	250.0	83.3
SN 090-0023	RT	STA. 885+79.00 TO STA. 895+79.00	1000.0	333.3
	RT	STA. 895+79.00 TO STA. 900+79.00	500.0	166.7
	RT & LT	STA. 900+79.00 TO STA. 902+54.00	350.0	116.7
	RT & LT	STA. 902+54.00 TO STA. 906+79.00	850.0	283.3
	RT & LT	STA. 906+79.00 TO STA. 908+54.00	350.0	116.7
SN 090-0077	RT	STA. 908+54.00 TO STA. 916+23.00	769.0	256.3
	RT	STA. 916+23.00 TO STA. 921+23.00	500.0	166.7
	RT	STA. 921+23.00 TO STA. 923+73.00	250.0	83.3
STAGE I - WB I-74				
SN 090-0020	RT & LT	STA. 630+71.50 TO STA. 632+46.50	350.0	116.7
	RT & LT	STA. 632+46.50 TO STA. 636+59.00	825.0	275.0
	RT & LT	STA. 636+59.00 TO STA. 637+29.00	140.0	46.7
	RT & LT	STA. 637+29.00 TO STA. 641+81.00	904.0	301.3
SN 090-0022	RT & LT	STA. 641+81.00 TO STA. 642+51.00	140.0	46.7
	RT & LT	STA. 642+51.00 TO STA. 647+26.00	950.0	316.7
	RT & LT	STA. 647+26.00 TO STA. 649+01.00	350.0	116.7
	LT	STA. 649+01.00 TO STA. 654+01.00	500.0	166.7
	LT	STA. 654+01.00 TO STA. 664+01.00	1000.0	333.3
SN 090-0084	LT	STA. 664+01.00 TO STA. 685+82.00	2181.0	727.0
	LT	STA. 685+82.00 TO STA. 688+32.00	250.0	83.3
	LT	STA. 688+32.00 TO STA. 693+32.00	500.0	166.7
	LT	STA. 693+32.00 TO STA. 703+32.00	1000.0	333.3
SN 090-0075	LT	STA. 703+32.00 TO STA. 764+07.00	6075.0	2025.0
	LT	STA. 764+07.00 TO STA. 766+57.00	250.0	83.3
	LT	STA. 766+57.00 TO STA. 771+57.00	500.0	166.7
	LT	STA. 771+57.00 TO STA. 781+57.00	1000.0	333.3
SN 090-0024	RT & LT	STA. 901+85.00 TO STA. 903+60.00	350.0	116.7
	RT & LT	STA. 903+60.00 TO STA. 907+85.00	850.0	283.3
	RT & LT	STA. 907+85.00 TO STA. 909+60.00	350.0	116.7
	LT	STA. 909+60.00 TO STA. 921+48.00	1188.0	396.0
SN 090-0077	LT	STA. 921+48.00 TO STA. 923+98.00	250.0	83.3
	LT	STA. 923+98.00 TO STA. 928+98.00	500.0	166.7
	LT	STA. 928+98.00 TO STA. 938+98.00	1000.0	333.3

TEMPORARY PAVEMENT MARKING SCHEDULE (CONT'D)

LOCATION			70300904 PAVEMENT MARKING TAPE, TYPE IV 4"	X7030005 TEMPORARY PAVEMENT MARKING REMOVAL
			FT	SQ FT
STAGE II - EB I-74				
SN 090-0019	LT	STA. 614+85.00 TO STA. 624+85.00	1000.0	333.3
	LT	STA. 624+85.00 TO STA. 629+85.00	500.0	166.7
	LT & RT	STA. 629+85.00 TO STA. 631+60.00	350.0	116.7
	LT & RT	STA. 631+60.00 TO STA. 636+22.50	925.0	308.3
SN 090-0021	LT & RT	STA. 636+22.50 TO STA. 641+23.00	1001.0	333.7
	LT & RT	STA. 641+23.00 TO STA. 646+48.00	1050.0	350.0
	LT & RT	STA. 646+48.00 TO STA. 648+23.00	350.0	116.7
SN 090-0084	LT	STA. 648+23.00 TO STA. 671+22.00	2299.0	766.3
	LT	STA. 671+22.00 TO STA. 681+22.00	1000.0	333.3
	LT	STA. 681+22.00 TO STA. 686+22.00	500.0	166.7
	LT	STA. 686+22.00 TO STA. 687+57.00	135.0	45.0
SN 090-0075	LT	STA. 687+57.00 TO STA. 749+50.00	6193.0	2064.3
	LT	STA. 749+50.00 TO STA. 759+50.00	1000.0	333.3
	LT	STA. 759+50.00 TO STA. 764+50.00	500.0	166.7
	LT	STA. 764+50.00 TO STA. 765+85.00	135.0	45.0
SN 090-0023	LT	STA. 885+79.00 TO STA. 895+79.00	1000.0	333.3
	LT	STA. 895+79.00 TO STA. 900+79.00	500.0	166.7
	LT & RT	STA. 900+79.00 TO STA. 902+54.00	350.0	116.7
	LT & RT	STA. 902+54.00 TO STA. 907+29.00	950.0	316.7
	LT & RT	STA. 907+29.00 TO STA. 909+04.00	350.0	116.7
SN 090-0077	LT	STA. 909+04.00 TO STA. 916+98.00	794.0	264.7
	LT	STA. 916+98.00 TO STA. 921+98.00	500.0	166.7
	LT	STA. 921+98.00 TO STA. 923+23.00	125.0	41.7
STAGE II - WB I-74				
SN 090-0020	LT & RT	STA. 630+21.50 TO STA. 631+96.50	350.0	116.7
	LT & RT	STA. 631+96.50 TO STA. 636+59.00	925.0	308.3
	LT & RT	STA. 636+59.00 TO STA. 642+01.00	1084.0	361.3
SN 090-0022	LT & RT	STA. 642+01.00 TO STA. 647+26.00	1050.0	350.0
	LT & RT	STA. 647+26.00 TO STA. 649+01.00	350.0	116.7
	RT	STA. 649+01.00 TO STA. 654+01.00	500.0	166.7
	RT	STA. 654+01.00 TO STA. 664+01.00	1000.0	333.3
SN 090-0084	RT	STA. 664+01.00 TO STA. 685+72.00	2171.0	723.7
	RT	STA. 685+72.00 TO STA. 687+57.00	185.0	61.7
	RT	STA. 687+57.00 TO STA. 692+57.00	500.0	166.7
	RT	STA. 692+57.00 TO STA. 702+57.00	1000.0	333.3
SN 090-0075	RT	STA. 702+57.00 TO STA. 764+02.00	6145.0	2048.3
	RT	STA. 764+02.00 TO STA. 765+82.00	180.0	60.0
	RT	STA. 765+82.00 TO STA. 770+82.00	500.0	166.7
	RT	STA. 770+82.00 TO STA. 780+82.00	1000.0	333.3
SN 090-0024	LT & RT	STA. 901+35.00 TO STA. 903+10.00	350.0	116.7
	LT & RT	STA. 903+10.00 TO STA. 907+85.00	950.0	316.7
	LT & RT	STA. 907+85.00 TO STA. 909+60.00	350.0	116.7
	RT	STA. 909+60.00 TO STA. 921+48.00	1188.0	396.0
SN 090-0077	RT	STA. 921+48.00 TO STA. 923+23.00	175.0	58.3
	RT	STA. 923+23.00 TO STA. 928+23.00	500.0	166.7
	RT	STA. 928+23.00 TO STA. 938+23.00	1000.0	333.3
SUB TOTAL - SN 090-0019=			5590	1863
SUB TOTAL - SN 090-0020=			4578	1526
SUB TOTAL - SN 090-0021=			4662	1554
SUB TOTAL - SN 090-0022=			5840	1947
SUB TOTAL - SN 090-0023=			6200	2067
SUB TOTAL - SN 090-0024=			5576	1859
SUB TOTAL - SN 090-0084=			15745	5248
SUB TOTAL - SN 090-0075=			31308	10436
SUB TOTAL - SN 090-0077=			6363	2121
TOTALS =			85862	28621

SHORT TERM PAVEMENT MARKING SCHEDULE

LOCATION			70300100 SHORT TERM PAVEMENT MARKING	70300150 SHORT TERM PAVEMENT MARKING REMOVAL
I-74 EB			FT	SQ FT
SN 090-0019	LT	STA. 629+75.00 TO STA. 632+95.00	12.0	4.0
	RT	STA. 629+75.00 TO STA. 632+95.00	12.0	4.0
	LT	STA. 635+10.00 TO STA. 639+00.00	16.0	5.3
	RT	STA. 635+10.00 TO STA. 639+00.00	16.0	5.3
SN 090-0021	LT	STA. 639+00.00 TO STA. 642+58.00	16.0	5.3
	RT	STA. 639+00.00 TO STA. 642+58.00	16.0	5.3
	LT	STA. 645+36.25 TO STA. 647+83.00	12.0	4.0
	RT	STA. 645+36.25 TO STA. 648+33.00	12.0	4.0
SN 090-0023	LT	STA. 900+69.00 TO STA. 904+05.00	16.0	5.3
	RT	STA. 900+69.00 TO STA. 903+89.00	12.0	4.0
	LT	STA. 906+15.00 TO STA. 908+64.00	12.0	4.0
	RT	STA. 906+00.00 TO STA. 909+14.00	12.0	4.0
I-74 WB				
SN 090-0020	LT	STA. 630+11.50 TO STA. 633+10.00	12.0	4.0
	RT	STA. 630+61.50 TO STA. 633+10.00	12.0	4.0
	LT	STA. 635+24.00 TO STA. 639+00.00	16.0	5.3
	RT	STA. 635+24.00 TO STA. 639+00.00	16.0	5.3
SN 090-0022	LT	STA. 639+00.00 TO STA. 643+12.00	16.0	5.3
	RT	STA. 639+00.00 TO STA. 643+12.00	16.0	5.3
	LT	STA. 645+91.00 TO STA. 649+11.00	12.0	4.0
	RT	STA. 645+91.00 TO STA. 649+11.00	12.0	4.0
SN 090-0024	LT	STA. 901+25.00 TO STA. 904+40.50	12.0	4.0
	RT	STA. 901+75.00 TO STA. 904+24.50	12.0	4.0
	LT	STA. 906+50.00 TO STA. 909+70.00	12.0	4.0
	RT	STA. 906+34.00 TO STA. 909+70.00	16.0	5.3
		SUB TOTAL - SN 090-0019=	56	19
		SUB TOTAL - SN 090-0020=	56	19
		SUB TOTAL - SN 090-0021=	56	19
		SUB TOTAL - SN 090-0022=	56	19
		SUB TOTAL - SN 090-0023=	52	17
		SUB TOTAL - SN 090-0024=	52	17
		TOTAL =	328	110

PAVEMENT MARKING SCHEDULE

LOCATION			X0327980 PAVEMENT MARKING REMOVAL - WATER BLASTING	78009004 MODIFIED URETHANE PAVEMENT MARKING - LINE 4" (WHITE)	78009004 MODIFIED URETHANE PAVEMENT MARKING - LINE 4" (YELLOW)	78009006 MODIFIED URETHANE PAVEMENT MARKING - LINE 6"
STAGE I EB I-74			SQ FT	FT	FT	FT
SN 090-0019	CL	STA. 614+85.00 TO STA. 624+85.00	125.0			
	LT	STA. 632+95.00 TO STA. 635+10.00	71.7			
SN 090-0021	LT	STA. 642+58.00 TO STA. 645+36.25	92.8			
SN 090-0023	CL	STA. 885+79.00 TO STA. 895+79.00	125.0			
	LT	STA. 904+05.00 TO STA. 906+15.00	70.0			
STAGE I WB I-74						
SN 090-0020	RT	STA. 633+10.00 TO STA. 635+24.00	71.3			
SN 090-0022	RT	STA. 643+12.00 TO STA. 645+91.00	93.0			
SN 090-0075	CL	STA. 771+57.00 TO STA. 781+57.00	125.0			250.0
SN 090-0024	RT	STA. 904+24.50 TO STA. 906+34.00	69.8			
SN 090-0077	CL	STA. 928+98.00 TO STA. 938+98.00	125.0			250.0
SN 090-0022	CL***	STA. 654+01.00 TO STA. 664+01.00	125.0			
STAGE II WB I-74						
SN 090-0075	CL	STA. 770+82.00 TO STA. 780+82.00	125.0			250.0
SN 090-0077	CL	STA. 928+23.00 TO STA. 938+23.00	125.0			250.0
PERMANENT PAVEMENT MARKING						
EB I-74						
SN 090-0019	CL	STA. 614+85.00 TO STA. 624+85.00				250.0
	LT & RT	STA. 629+75.00 TO STA. 639+00.00		925.0	925.0	
	CL	STA. 632+35.00 TO STA. 635+70.00				83.8
SN 090-0021	LT	STA. 639+00.00 TO STA. 647+83.00			883.0	
	RT	STA. 639+00.00 TO STA. 648+33.00		933.0		
	CL	STA. 641+98.00 TO STA. 645+96.25				99.6
SN 090-0023	CL	STA. 885+79.00 TO STA. 895+79.00				250.0
	LT	STA. 900+69.00 TO STA. 908+64.00			795.0	
	RT	STA. 900+69.00 TO STA. 909+14.00		845.0		
	CL	STA. 903+38.00 TO STA. 906+70.00				83.0
WB I-74						
SN 090-0020	LT	STA. 630+11.50 TO STA. 639+00.00		888.5		
	RT	STA. 630+61.50 TO STA. 639+00.00			838.5	
	CL	STA. 632+50.00 TO STA. 635+84.00				83.5
SN 090-0022	LT & RT	STA. 639+00.00 TO STA. 649+11.00		1011.0	1011.0	
	CL	STA. 642+52.00 TO STA. 646+51.00				99.8
	CL	STA. 654+01.00 TO STA. 664+01.00				250.0
SN 090-0024	LT	STA. 901+25.00 TO STA. 909+70.00		845.0		
	RT	STA. 901+75.00 TO STA. 909+70.00			795.0	
	CL	STA. 903+71.00 TO STA. 907+01.00				82.5
		SUB TOTAL - SN 090-0019=	197	925	925	334
		SUB TOTAL - SN 090-0020=	71	888.5	838.5	84
		SUB TOTAL - SN 090-0021=	93	933	883	100
		SUB TOTAL - SN 090-0022=	218	1011	1011	350
		SUB TOTAL - SN 090-0023=	195	845	795	333
		SUB TOTAL - SN 090-0024=	70	845	795	83
		SUB TOTAL - SN 090-0075=	250			500
		SUB TOTAL - SN 090-0077=	250			500
		TOTAL =	1344	10695		2284

***WHEN WORK AT OVERHEAD STRUCTURES IS COMPLETED THE LIMITS OF THE LANE CLOSURE SHALL BE ADJUSTED.

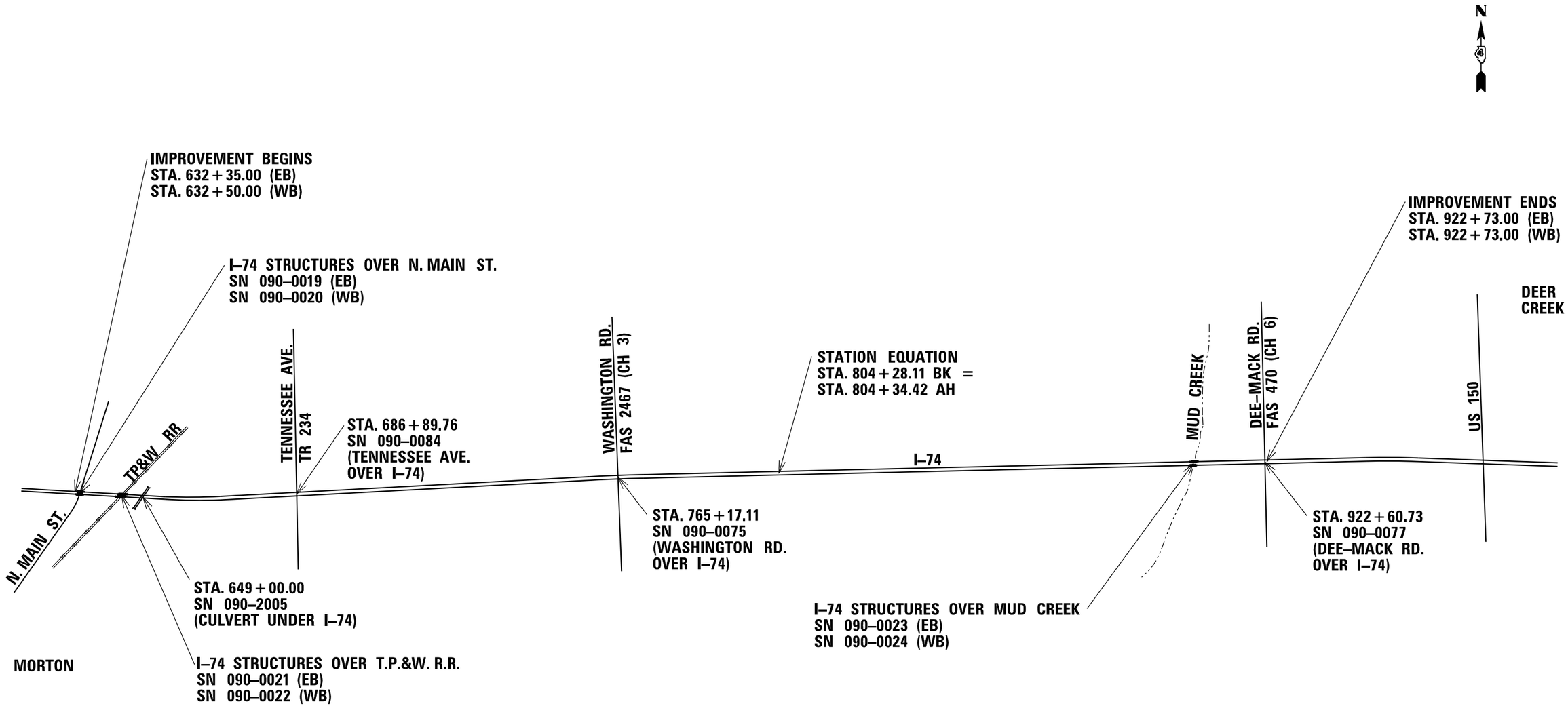

NOT TO SCALE

MODEL: Default
FILE NAME: S:\GEN\WIN\WORD\STDS\PLNS\Squid\031-74_3R Morton Ave to Woodford Co\Drawings\CAD\sheets\68F54\68F54 Line Diagram.dgn

USER NAME = diazaa	DESIGNED -	REVISED -	
	DRAWN -	REVISED -	
PLOT SCALE = 100.000 ' / in.	CHECKED -	REVISED -	
PLOT DATE = 10/29/2020	DATE -	REVISED -	

STATE OF ILLINOIS
DEPARTMENT OF TRANSPORTATION

LINE DIAGRAM

SCALE: SHEET OF SHEETS STA. TO STA.

F.A.I. RTE.	SECTION	COUNTY	TOTAL SHEETS	SHEET NO.
74	90-15(HB(1-4);VB;B)BP,BJR,BRR	TAZEWELL	192	15
		CONTRACT NO. 68F54		
	ILLINOIS	FED. AID PROJECT		

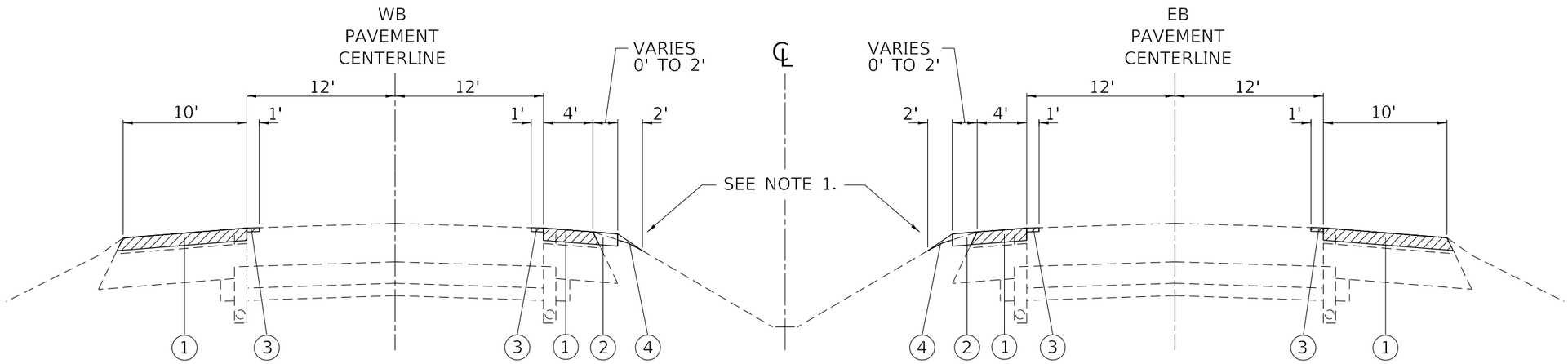

PRE-STAGE

LEGEND

1. PROP. HMA SURFACE REMOVAL, 6" AND PROP. HMA SHOULDERS (6")
2. PROP. EARTH EXCAVATION FOR WIDENING AND PROP. HMA SHOULDERS (6")
3. PROP. HMA SURFACE REMOVAL, 2" AND PROP. HMA SHOULDERS (2")
4. PROP. AGGREGATE SHOULDER WEDGE, TY. B
5. PROP. GUARDRAIL AGGREGATE EROSION CONTROL

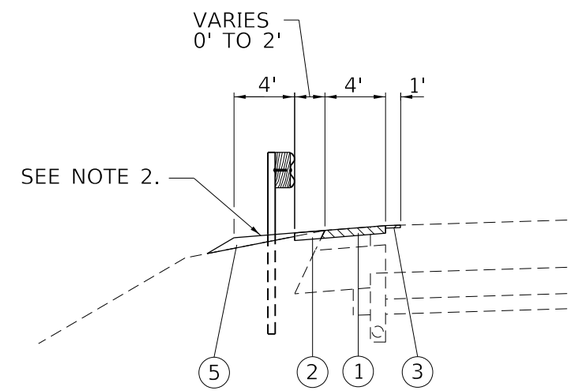

TYPICAL TREATMENT ON INSIDE SHOULDER WITH GUARDRAIL

NOTES

1. IF A 1:4 (V:H) OR FLATTER SLOPE CANNOT BE ATTAINED WITH THE PROPOSED AGGREGATE WEDGE SHOULDER, TY. B, THE CONTRACTOR SHALL BUILD EMBANKMENT ON THE FORESLOPE AS DIRECTED BY THE ENGINEER TO ALLOW FOR A 1:4 FORESLOPE. EMBANKMENT WORK SHALL BE PAID FOR IN ACCORDANCE WITH ARTICLE 109.04 OF THE STANDARD SPECIFICATIONS.
2. PROP. GUARDRAIL AGGREGATE EROSION CONTROL SHALL BE INSTALLED AS DIRECTED BY THE ENGINEER TO FILL LOW AREAS. NO FABRIC IS REQUIRED.

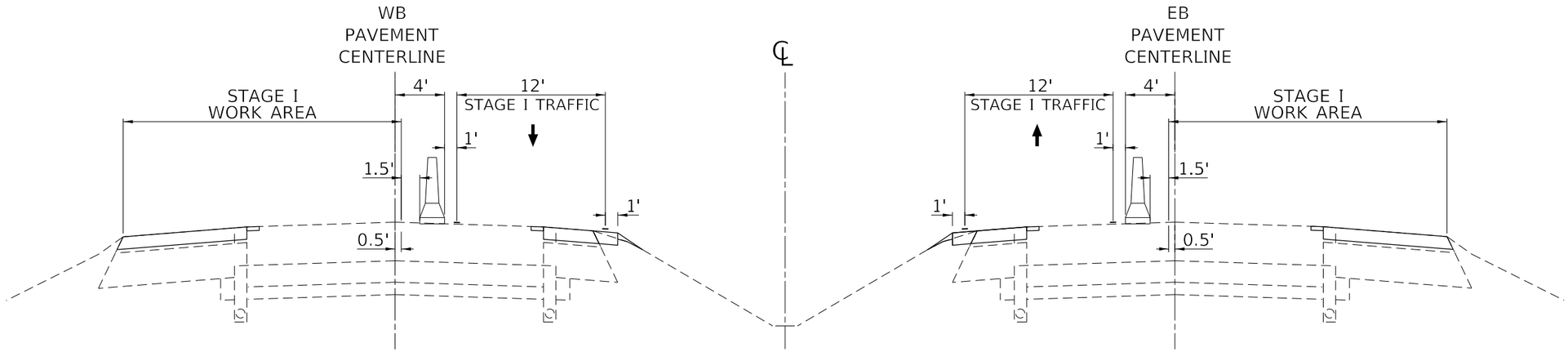

STAGE I

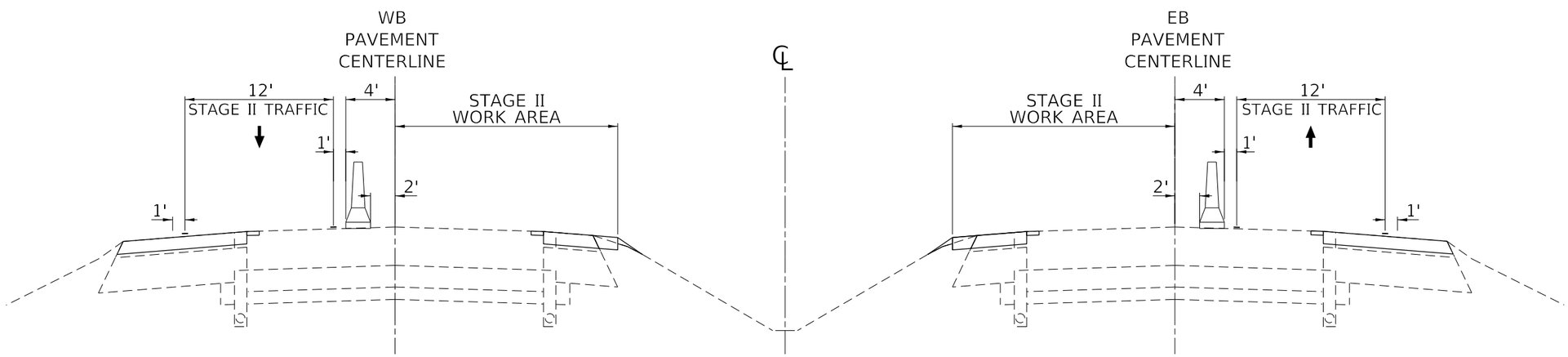

STAGE II

NOTES

1. THESE TYPICAL SECTIONS ARE INTENDED TO ONLY SHOW PROPOSED TRAFFIC CONTROL LAYOUT ON THE ROADWAY APPROACHING AND DEPARTING THE STRUCTURES.
2. EXISTING AND PROPOSED GUARDRAIL ARE NOT SHOWN ON THESE TYPICAL SECTIONS.

MODEL: Default
FILE NAME: S:\GEN\WINWORD\STD&PLN\Squad031-74 3R Morton Ave to Woodford Co\Drawings\CAD\sheets\68F54\68F54 Proposed Staging Sheets.dgn

USER NAME = diazaa	DESIGNED -	REVISED -	STATE OF ILLINOIS DEPARTMENT OF TRANSPORTATION
	DRAWN -	REVISED -	
PLOT SCALE = 10.0000 ' / in.	CHECKED -	REVISED -	
PLOT DATE = 10/29/2020	DATE -	REVISED -	

STAGING DETAILS
STAGES I & II TYPICAL SECTIONS

SCALE: | SHEET OF SHEETS | STA. TO STA.

F.A.I. RTE.	SECTION	COUNTY	TOTAL SHEETS	SHEET NO.
74	90-15(HB(1-4);VB;B)BP,BJR,BRR	TAZEWELL	192	17
		CONTRACT NO. 68F54		
		ILLINOIS FED. AID PROJECT		

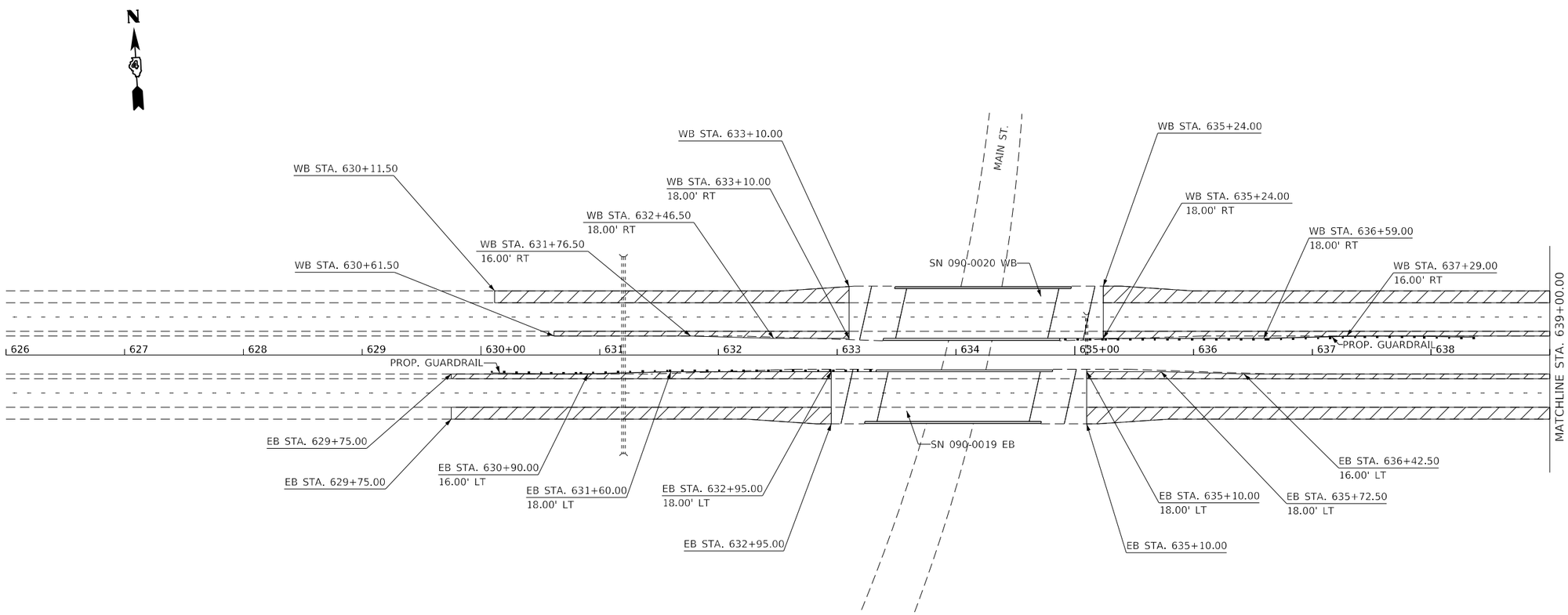

LEGEND:

PROPOSED HMA SHOULDERS

0 50' 100'

NOTES:

1. OFFSETS ARE MEASURED FROM EXISTING CENTERLINES OF EB OR WB PAVEMENT TO THE OUTSIDE EDGE OF PROPOSED HMA SHOULDERS.
2. 0' - 2' OF WIDENING OF THE INSIDE SHOULDER IS REQUIRED IN SOME AREAS.
3. EXISTING GUARDRAIL OMITTED FOR CLARITY.
4. SEE GUARDRAIL DETAILS.
5. USE TRAFFIC CONTROL AND PROTECTION STANDARDS 701400 AND 701401 TO COMPLETE THIS WORK. THE WIDTH OF THE OPEN LANE SHALL NOT BE REDUCED DURING PRE-STAGE WORK.

MODEL: Default
FILE NAME: S:\GENWH\WORD\STD&PLNS\plus\03\-74 3R Morton Ave to Woodford Co\Drawings\CADsheets\68F54\68F54 Proposed Staging Sheets.dgn

USER NAME = diazaa	DESIGNED -	REVISED -	
	DRAWN -	REVISED -	
PLOT SCALE = 100.0000 ' / in.	CHECKED -	REVISED -	
PLOT DATE = 10/29/2020	DATE -	REVISED -	

STATE OF ILLINOIS
DEPARTMENT OF TRANSPORTATION

STAGING DETAILS
PRE-STAGE PLAN

SCALE: SHEET OF SHEETS STA. TO STA.

F.A.I. RTE.	SECTION	COUNTY	TOTAL SHEETS	SHEET NO.
74	90-15(HB(1-4):VB;B)BP,BJR,BRR	TAZEWELL	192	18

CONTRACT NO. 68F54

ILLINOIS FED. AID PROJECT

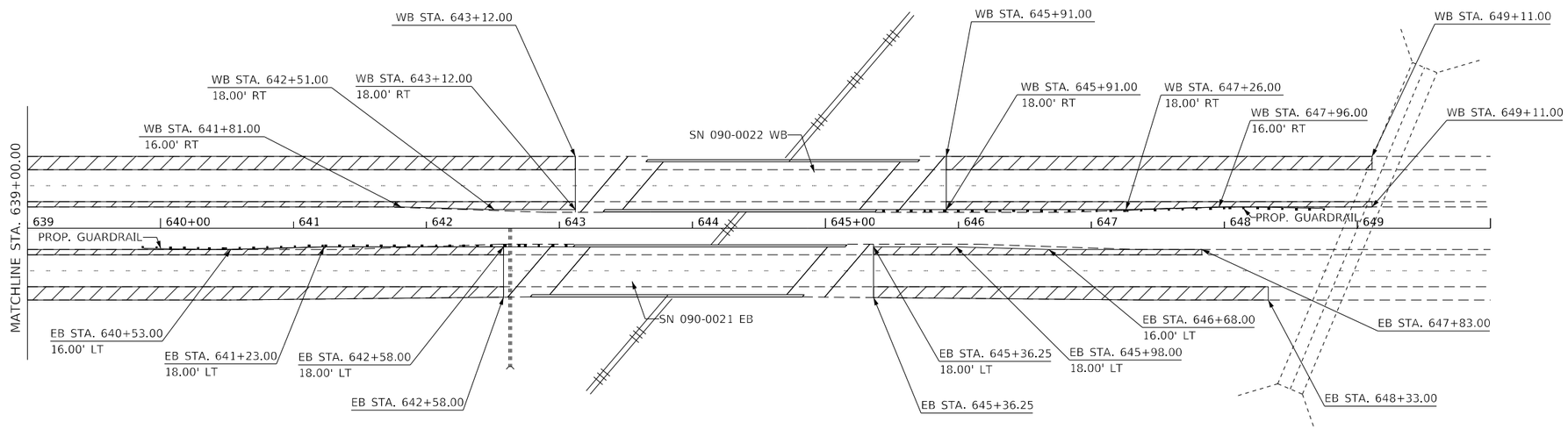

LEGEND:

PROPOSED HMA SHOULDERS

0 50' 100'

NOTES:

1. OFFSETS ARE MEASURED FROM EXISTING CENTERLINES OF EB OR WB PAVEMENT TO THE OUTSIDE EDGE OF PROPOSED HMA SHOULDERS.
2. 0' - 2' OF WIDENING OF THE INSIDE SHOULDER IS REQUIRED IN SOME AREAS.
3. EXISTING GUARDRAIL OMITTED FOR CLARITY.
4. SEE GUARDRAIL DETAILS.
5. USE TRAFFIC CONTROL AND PROTECTION STANDARDS 701400 AND 701401 TO COMPLETE THIS WORK. THE WIDTH OF THE OPEN LANE SHALL NOT BE REDUCED DURING PRE-STAGE WORK.

MODEL: Default
FILE NAME: S:\GEN\WINWORD\STD&PLNS\Suju\03\I-74 3R Morton Ave to Woodford Co\Drawings\CADsheets\68F54\68F54 Proposed Staging Sheets.dgn

USER NAME = diazaa	DESIGNED -	REVISED -	
	DRAWN -	REVISED -	
PLOT SCALE = 100.0000 ' / in.	CHECKED -	REVISED -	
PLOT DATE = 10/29/2020	DATE -	REVISED -	

STATE OF ILLINOIS
DEPARTMENT OF TRANSPORTATION

STAGING DETAILS
PRE-STAGE PLAN

SCALE: SHEET OF SHEETS STA. TO STA.

F.A.I. RTE.	SECTION	COUNTY	TOTAL SHEETS	SHEET NO.
74	90-15(HB(1-4):VB;B)BP,BJR,BRR	TAZEWELL	192	19
		CONTRACT NO. 68F54		
	ILLINOIS	FED. AID PROJECT		

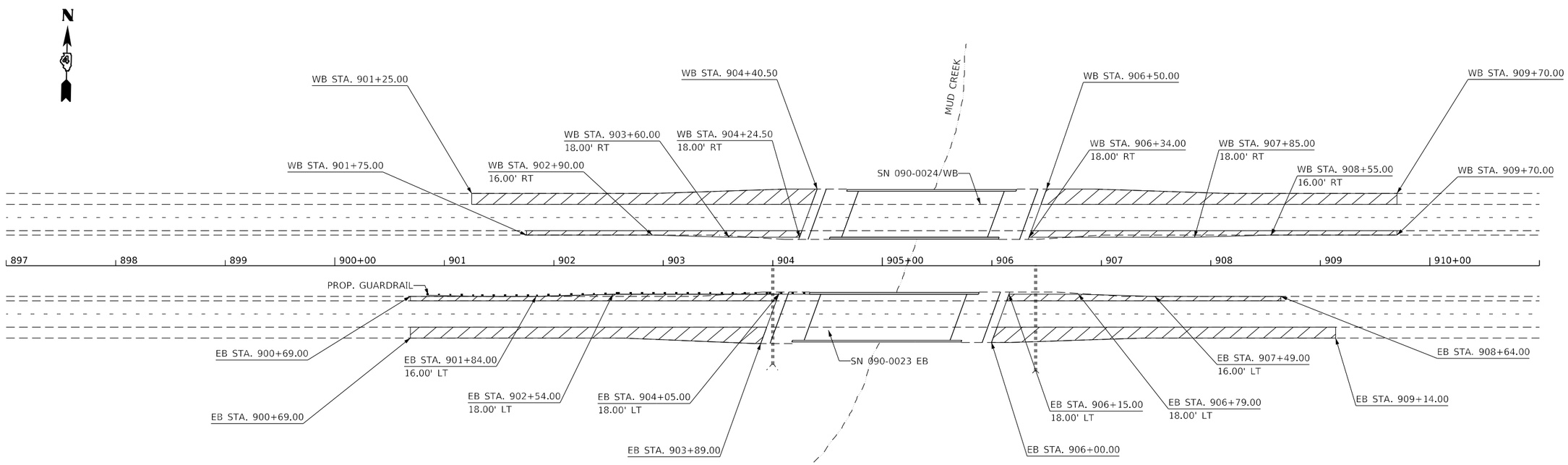

LEGEND:

PROPOSED HMA SHOULDERS

0 50' 100'

NOTES:

1. OFFSETS ARE MEASURED FROM EXISTING CENTERLINES OF EB OR WB PAVEMENT TO THE OUTSIDE EDGE OF PROPOSED HMA SHOULDERS.
2. 0' - 2' OF WIDENING OF THE INSIDE SHOULDER IS REQUIRED IN SOME AREAS.
3. EXISTING GUARDRAIL OMITTED FOR CLARITY.
4. SEE GUARDRAIL DETAILS.
5. USE TRAFFIC CONTROL AND PROTECTION STANDARDS 701400 AND 701401 TO COMPLETE THIS WORK. THE WIDTH OF THE OPEN LANE SHALL NOT BE REDUCED DURING PRE-STAGE WORK.

MODEL: Default
FILE NAME: S:\GENWIN\WORD\STD&PL\NSSplus\03\-74 3R Morton Ave to Woodford Co\Drawings\CADsheets\68F54\68F54 Proposed Staging Sheets.dgn

USER NAME = diazaa	DESIGNED -	REVISED -	
	DRAWN -	REVISED -	
PLOT SCALE = 100.0000 ' / in.	CHECKED -	REVISED -	
PLOT DATE = 10/29/2020	DATE -	REVISED -	

STATE OF ILLINOIS
DEPARTMENT OF TRANSPORTATION

STAGING DETAILS
PRE-STAGE PLAN

SCALE: | SHEET OF SHEETS | STA. TO STA.

F.A.I. RTE.	SECTION	COUNTY	TOTAL SHEETS	SHEET NO.
74	90-15(HB(1-4):VB;B)BP,BJR,BRR	TAZEWELL	192	20

CONTRACT NO. 68F54

ILLINOIS | FED. AID PROJECT

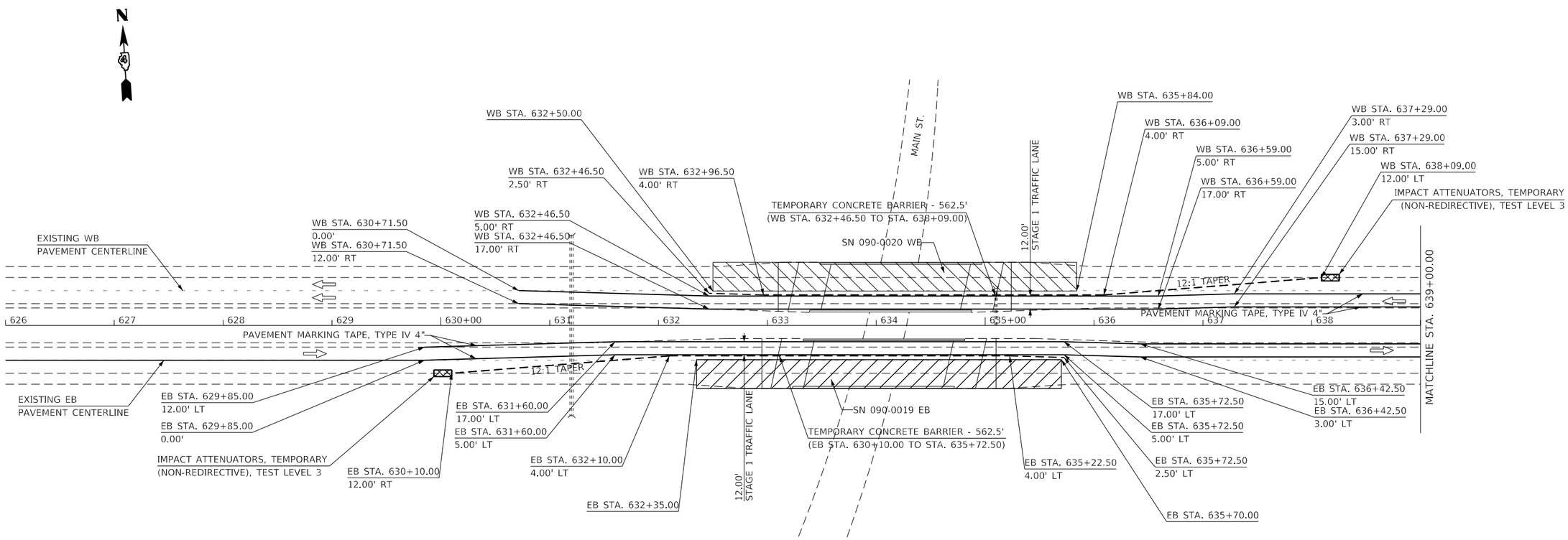

LEGEND:

- WORK AREA
- IMPACT ATTENUATORS, TEMPORARY (NON-REDIRECTIVE), TEST LEVEL 3
- TEMPORARY CONCRETE BARRIER

0 50' 100'

NOTES:

1. OFFSETS ARE MEASURED FROM EXISTING CENTERLINES OF EB OR WB PAVEMENT.
2. OFFSETS TO THE TEMPORARY CONCRETE BARRIER ARE MEASURED TO THE TRAFFIC FACE OF THE BARRIER.
3. TRAFFIC CONTROL SHALL BE IN ACCORDANCE WITH TRAFFIC CONTROL AND PROTECTION STANDARDS 701400 AND 701402 AND IN ACCORDANCE WITH DETAILS ON THIS SHEET.
4. GUARDRAIL OMITTED FOR CLARITY.
5. THE ROADWAY APPROACHES SHOWN IN THE WORK AREAS ON THIS SHEET SHALL BE PATCHED (AS NEEDED), MILLED, AND RESURFACED. SEE PAVEMENT TRANSITION DETAILS.

MODEL: Default
FILE NAME: S:\GEN\WINWORD\STD&PLNS\Squiz\03\I-74 3R Morton Ave to Woodford Co\Drawings\CADsheets\68F54\68F54 Proposed Staging Sheets.dgn

USER NAME = diazaa	DESIGNED -	REVISED -	
	DRAWN -	REVISED -	
PLOT SCALE = 100.0000 ' / in.	CHECKED -	REVISED -	
PLOT DATE = 10/29/2020	DATE -	REVISED -	

STATE OF ILLINOIS
DEPARTMENT OF TRANSPORTATION

STAGING DETAILS
STAGE I PLAN

SCALE: SHEET OF SHEETS STA. TO STA.

F.A.I. RTE.	SECTION	COUNTY	TOTAL SHEETS	SHEET NO.
74	90-15(HB(1-4):VB;B)BP,BJR,BRR	TAZEWELL	192	21
		CONTRACT NO. 68F54		
	ILLINOIS	FED. AID PROJECT		

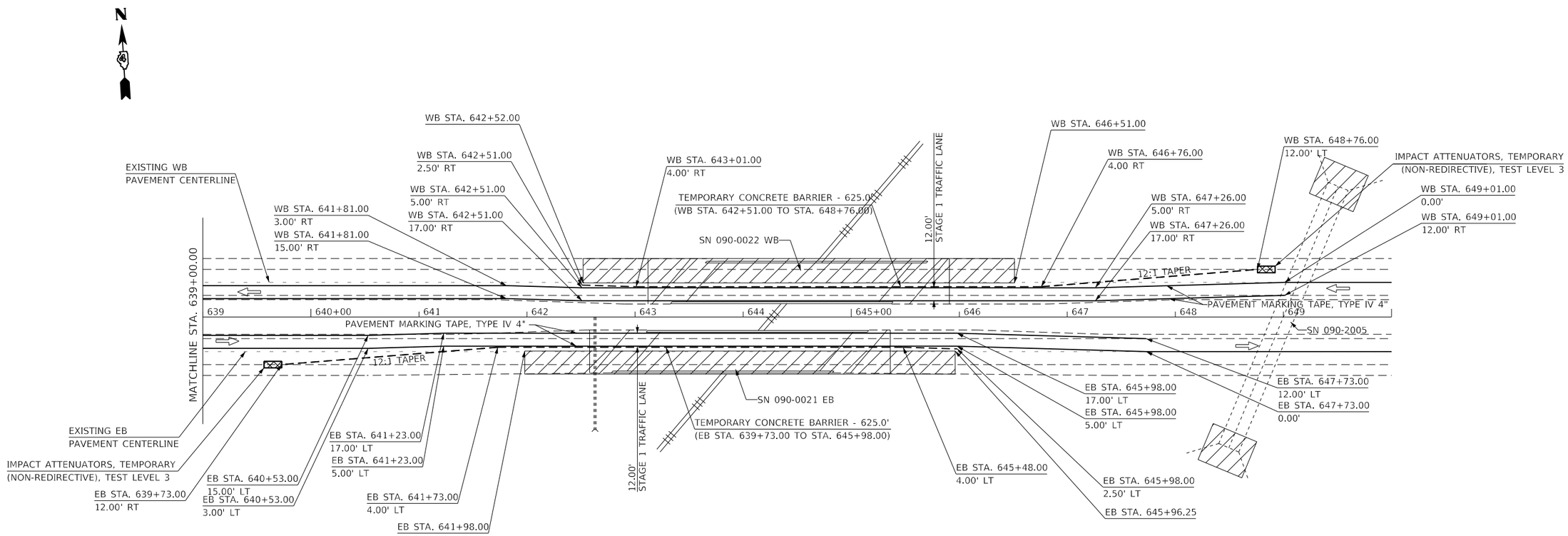

LEGEND:

- WORK AREA
- IMPACT ATTENUATORS, TEMPORARY (NON-REDIRECTIVE), TEST LEVEL 3
- TEMPORARY CONCRETE BARRIER

0 50' 100'

NOTES:

1. OFFSETS ARE MEASURED FROM EXISTING CENTERLINES OF EB OR WB PAVEMENT.
2. OFFSETS TO THE TEMPORARY CONCRETE BARRIER ARE MEASURED TO THE TRAFFIC FACE OF THE BARRIER.
3. TRAFFIC CONTROL SHALL BE IN ACCORDANCE WITH TRAFFIC CONTROL AND PROTECTION STANDARDS 701400 AND 701402 AND IN ACCORDANCE WITH DETAILS ON THIS SHEET.
4. GUARDRAIL OMITTED FOR CLARITY.
5. THE ROADWAY APPROACHES SHOWN IN THE WORK AREAS ON THIS SHEET SHALL BE PATCHED (AS NEEDED), MILLED, AND RESURFACED. SEE PAVEMENT TRANSITION DETAILS.

MODEL: Default
FILE NAME: S:\GEN\WINWORD\STD\PLNS\Suu\030\-74 3R Morton Ave to Woodford Co\Drawings\CAD\sheets\68F54\68F54 Proposed Staging Sheets.dgn

USER NAME = diazaa	DESIGNED -	REVISED -	
	DRAWN -	REVISED -	
PLOT SCALE = 100.0000 ' / in.	CHECKED -	REVISED -	
PLOT DATE = 10/29/2020	DATE -	REVISED -	

STATE OF ILLINOIS
DEPARTMENT OF TRANSPORTATION

STAGING DETAILS
STAGE I PLAN

SCALE: | SHEET OF SHEETS | STA. TO STA.

F.A.I. RTE.	SECTION	COUNTY	TOTAL SHEETS	SHEET NO.
74	90-15(HB(1-4):VB;B]BP,BJR,BRR	TAZEWELL	192	22

CONTRACT NO. 68F54

ILLINOIS | FED. AID PROJECT

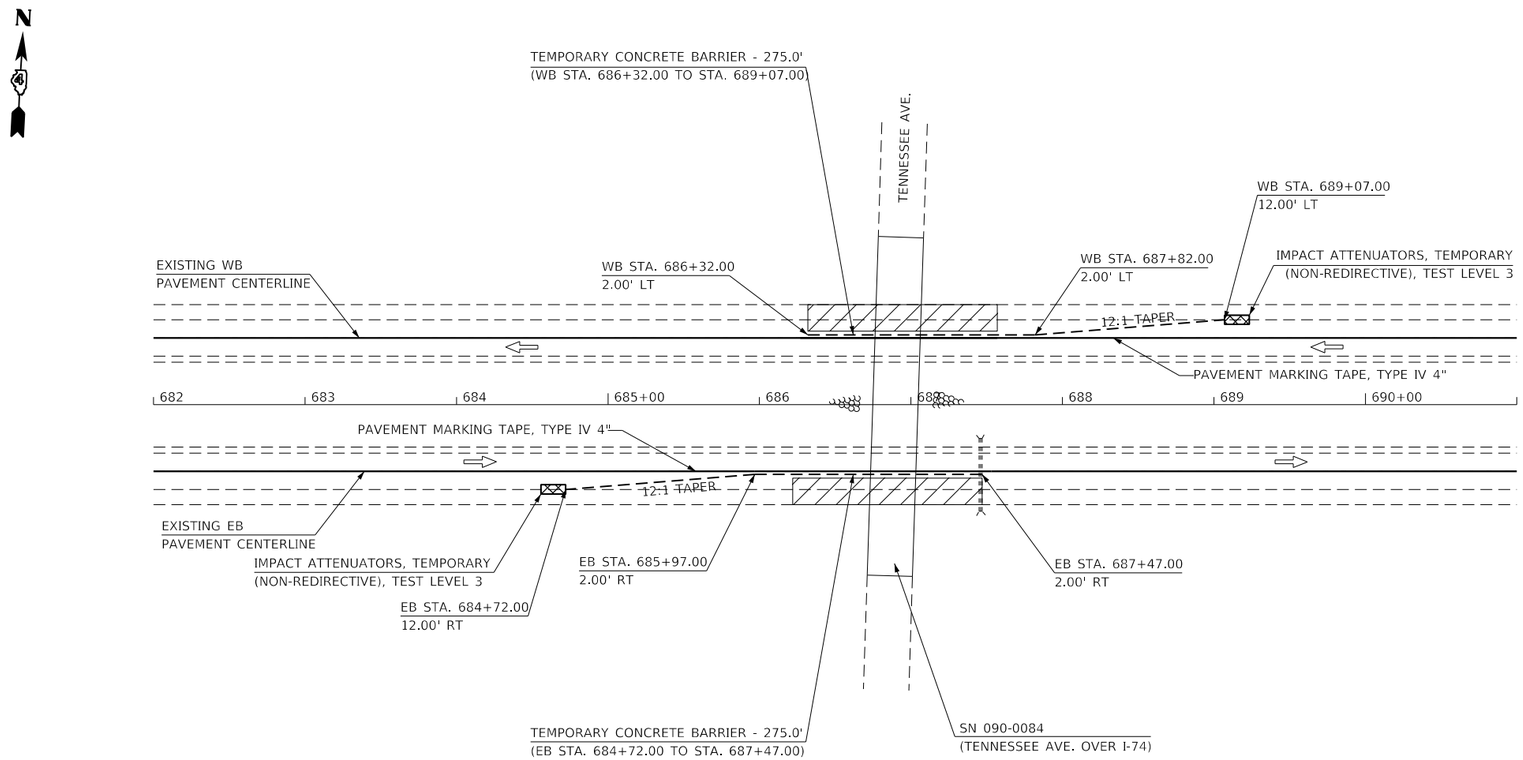

LEGEND:

- WORK AREA
- IMPACT ATTENUATORS, TEMPORARY (NON-REDIRECTIVE), TEST LEVEL 3
- TEMPORARY CONCRETE BARRIER

0 50' 100'

NOTES:

1. OFFSETS ARE MEASURED FROM EXISTING CENTERLINES OF EB OR WB PAVEMENT.
2. OFFSETS TO THE TEMPORARY CONCRETE BARRIER ARE MEASURED TO THE TRAFFIC FACE OF THE BARRIER.
3. TRAFFIC CONTROL SHALL BE IN ACCORDANCE WITH TRAFFIC CONTROL AND PROTECTION STANDARDS 701400 AND 701402 AND IN ACCORDANCE WITH DETAILS ON THIS SHEET.
4. GUARDRAIL OMITTED FOR CLARITY.

MODEL: Default
FILE NAME: S:\GEN\IN\WORD\STDS\PLNS\Squid\031-74 JR Morton Ave to Woodford Co\Drawings\CAD\sheets\68F54\68F54 Proposed Staging Sheets.dgn

USER NAME = diazaa	DESIGNED -	REVISED -	
	DRAWN -	REVISED -	
PLOT SCALE = 100.0000 ' / in.	CHECKED -	REVISED -	
PLOT DATE = 10/29/2020	DATE -	REVISED -	

STATE OF ILLINOIS
DEPARTMENT OF TRANSPORTATION

STAGING DETAILS
STAGE I PLAN

SCALE: | SHEET OF SHEETS | STA. TO STA.

F.A.I. RTE.	SECTION	COUNTY	TOTAL SHEETS	SHEET NO.
74	90-15(HB(1-4);VB;B)BP,BJR,BRR	TAZEWELL	192	23

CONTRACT NO. 68F54

ILLINOIS | FED. AID PROJECT

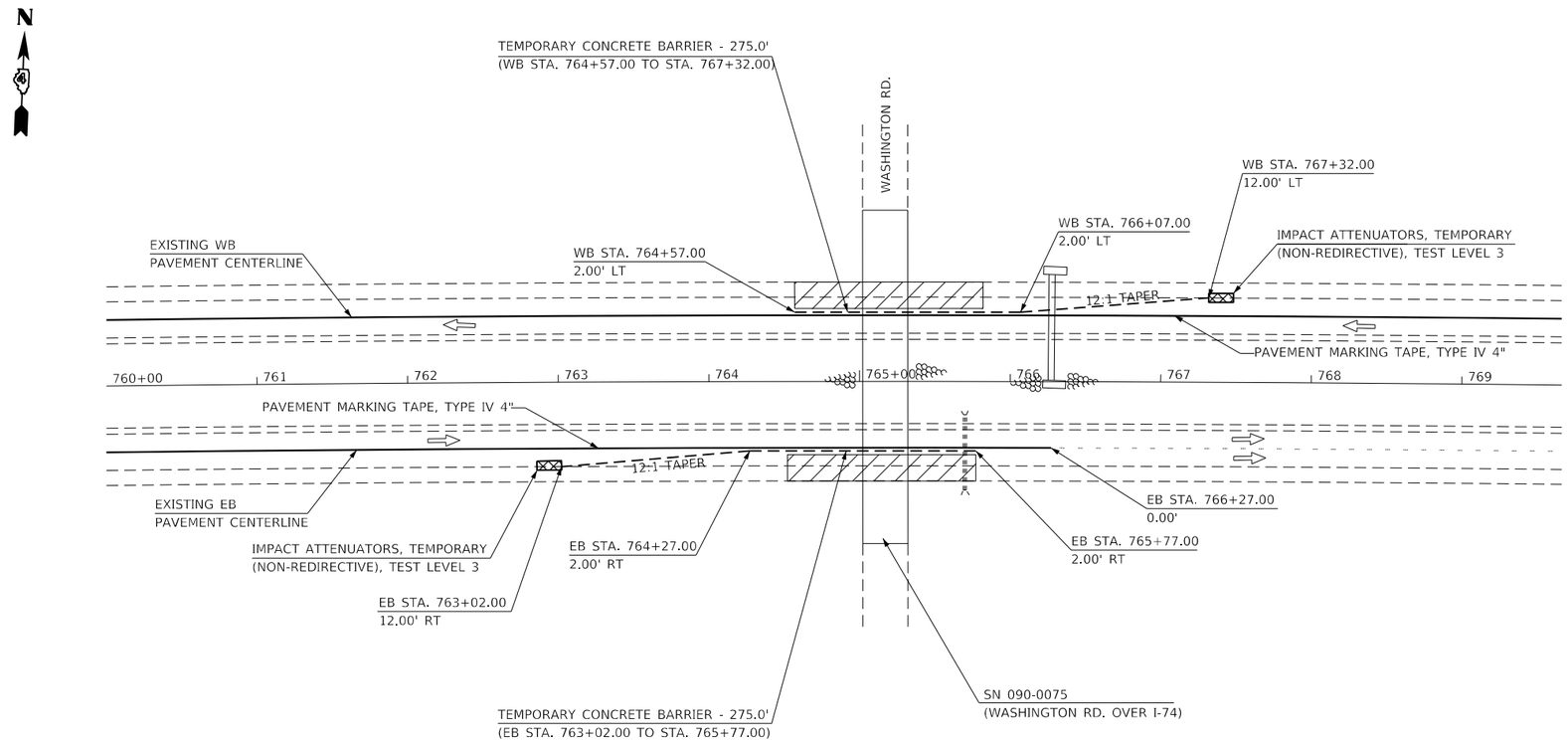

LEGEND:

- WORK AREA
- IMPACT ATTENUATORS, TEMPORARY (NON-REDIRECTIVE), TEST LEVEL 3
- TEMPORARY CONCRETE BARRIER

0 50' 100'

NOTES:

1. OFFSETS ARE MEASURED FROM EXISTING CENTERLINES OF EB OR WB PAVEMENT.
2. OFFSETS TO THE TEMPORARY CONCRETE BARRIER ARE MEASURED TO THE TRAFFIC FACE OF THE BARRIER.
3. TRAFFIC CONTROL SHALL BE IN ACCORDANCE WITH TRAFFIC CONTROL AND PROTECTION STANDARDS 701400 AND 701402 AND IN ACCORDANCE WITH DETAILS ON THIS SHEET.
4. GUARDRAIL OMITTED FOR CLARITY.

MODEL: Default
FILE NAME: S:\GEN\WIN\WORD\STD\&PLNS\Suu\d03\I-74 3R Morton Ave to Woodford Co\Drawings\CADsheets\68F54\68F54 Proposed Staging Sheets.dgn

USER NAME = diazaa	DESIGNED -	REVISED -	
	DRAWN -	REVISED -	
PLOT SCALE = 100.0000 ' / in.	CHECKED -	REVISED -	
PLOT DATE = 10/29/2020	DATE -	REVISED -	

STATE OF ILLINOIS
DEPARTMENT OF TRANSPORTATION

STAGING DETAILS
STAGE I PLAN

SCALE: | SHEET OF SHEETS | STA. TO STA.

F.A.I. RTE.	SECTION	COUNTY	TOTAL SHEETS	SHEET NO.
74	90-15(HB(1-4):VB;B)BP,BJR,BRR	TAZEWELL	192	24
		CONTRACT NO. 68F54		
	ILLINOIS	FED. AID PROJECT		

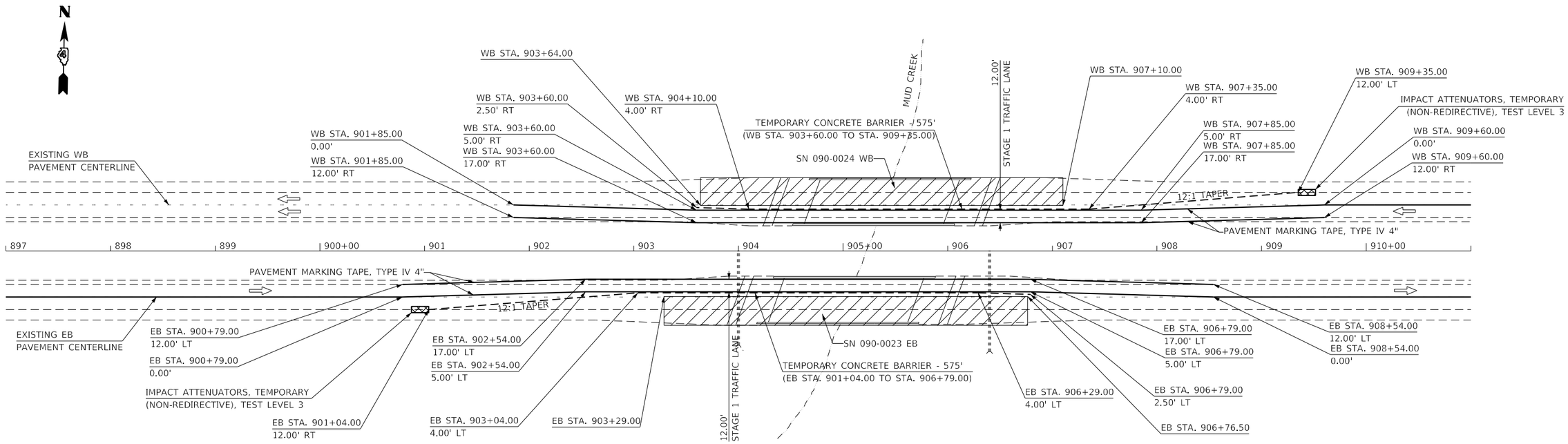

LEGEND:

- WORK AREA
- IMPACT ATTENUATORS, TEMPORARY (NON-REDIRECTIVE), TEST LEVEL 3
- TEMPORARY CONCRETE BARRIER

0 50' 100'

NOTES:

1. OFFSETS ARE MEASURED FROM EXISTING CENTERLINES OF EB OR WB PAVEMENT.
2. OFFSETS TO THE TEMPORARY CONCRETE BARRIER ARE MEASURED TO THE TRAFFIC FACE OF THE BARRIER.
3. TRAFFIC CONTROL SHALL BE IN ACCORDANCE WITH TRAFFIC CONTROL AND PROTECTION STANDARDS 701400 AND 701402 AND IN ACCORDANCE WITH DETAILS ON THIS SHEET.
4. GUARDRAIL OMITTED FOR CLARITY.
5. THE ROADWAY APPROACHES SHOWN IN THE WORK AREAS ON THIS SHEET SHALL BE PATCHED (AS NEEDED), MILLED, AND RESURFACED. SEE PAVEMENT TRANSITION DETAILS.

MODEL: Default
FILE NAME: S:\GEN\WINWORD\STDS\PLNS\Sua\003\z-74 JR Morton Ave to Woodford Co\Drawings\CADsheets\68F54\68F54 Proposed Staging Sheets.dgn

USER NAME = diazaa	DESIGNED -	REVISED -	
	DRAWN -	REVISED -	
PLOT SCALE = 100.0000 ' / in.	CHECKED -	REVISED -	
PLOT DATE = 10/29/2020	DATE -	REVISED -	

STATE OF ILLINOIS
DEPARTMENT OF TRANSPORTATION

STAGING DETAILS
STAGE I PLAN

SCALE: SHEET OF SHEETS STA. TO STA.

F.A.I. RTE.	SECTION	COUNTY	TOTAL SHEETS	SHEET NO.
74	90-15(HB(1-4);VB;B)BP,BJR,BRR	TAZEWELL	192	25

CONTRACT NO. 68F54

ILLINOIS FED. AID PROJECT

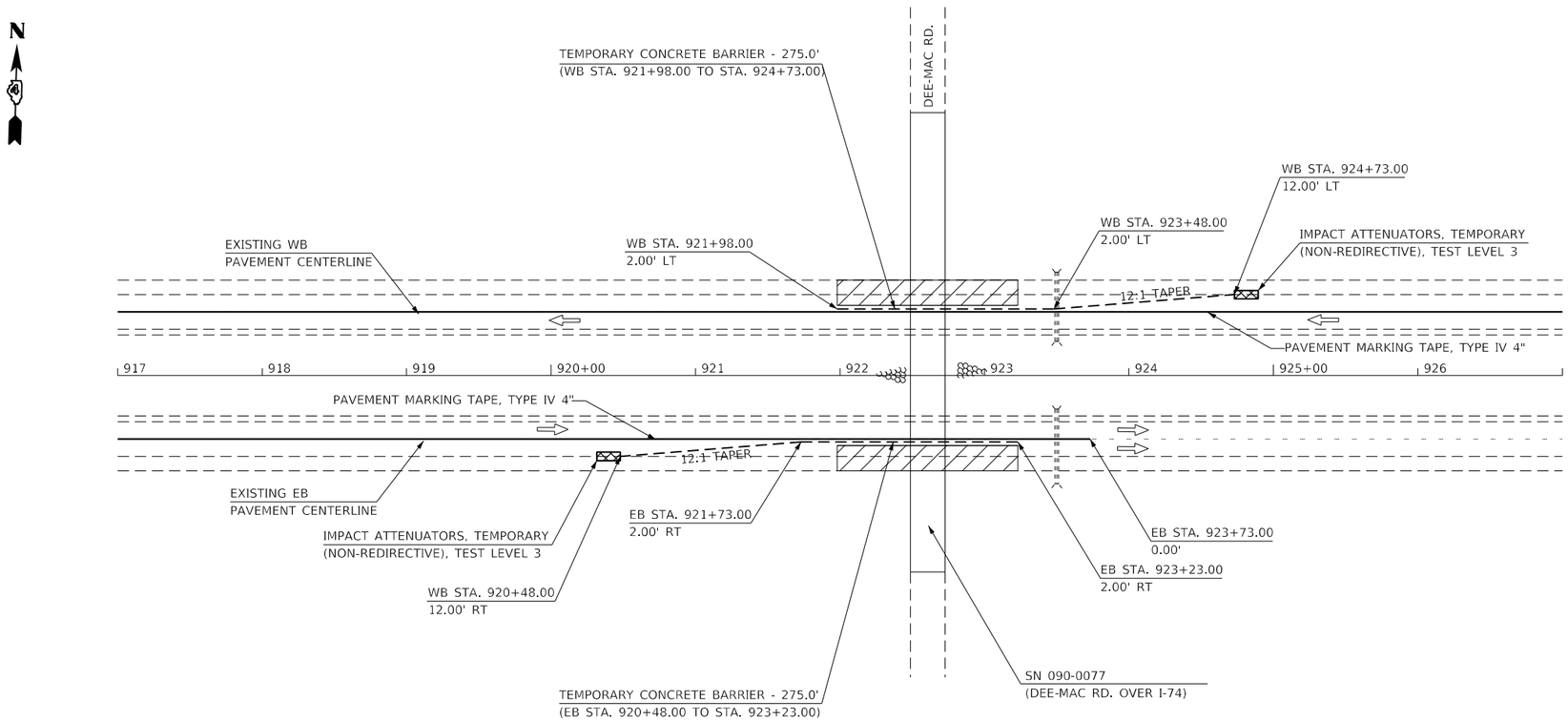

LEGEND:

- WORK AREA
- IMPACT ATTENUATORS, TEMPORARY (NON-REDIRECTIVE), TEST LEVEL 3
- TEMPORARY CONCRETE BARRIER

0 50' 100'

NOTES:

1. OFFSETS ARE MEASURED FROM EXISTING CENTERLINES OF EB OR WB PAVEMENT.
2. OFFSETS TO THE TEMPORARY CONCRETE BARRIER ARE MEASURED TO THE TRAFFIC FACE OF THE BARRIER.
3. TRAFFIC CONTROL SHALL BE IN ACCORDANCE WITH TRAFFIC CONTROL AND PROTECTION STANDARDS 701400 AND 701402 AND IN ACCORDANCE WITH DETAILS ON THIS SHEET.
4. GUARDRAIL OMITTED FOR CLARITY.

MODEL: Default
FILE NAME: S:\GEN\WINWORD\STD\PLNS\Squad031-74 3R Morton Ave to Woodford Co\Drawings\CAD\sheets\68F54\68F54 Proposed Staging Sheets.dgn

USER NAME = diazaa	DESIGNED -	REVISED -	
	DRAWN -	REVISED -	
PLOT SCALE = 100.0000 ' / in.	CHECKED -	REVISED -	
PLOT DATE = 10/29/2020	DATE -	REVISED -	

STATE OF ILLINOIS
DEPARTMENT OF TRANSPORTATION

STAGING DETAILS
STAGE I PLAN

SCALE: | SHEET OF SHEETS | STA. TO STA.

F.A.I. RTE.	SECTION	COUNTY	TOTAL SHEETS	SHEET NO.
74	90-15(HB(1-4);VB;B)BP,BJR,BRR	TAZEWELL	192	26

CONTRACT NO. 68F54

ILLINOIS FED. AID PROJECT

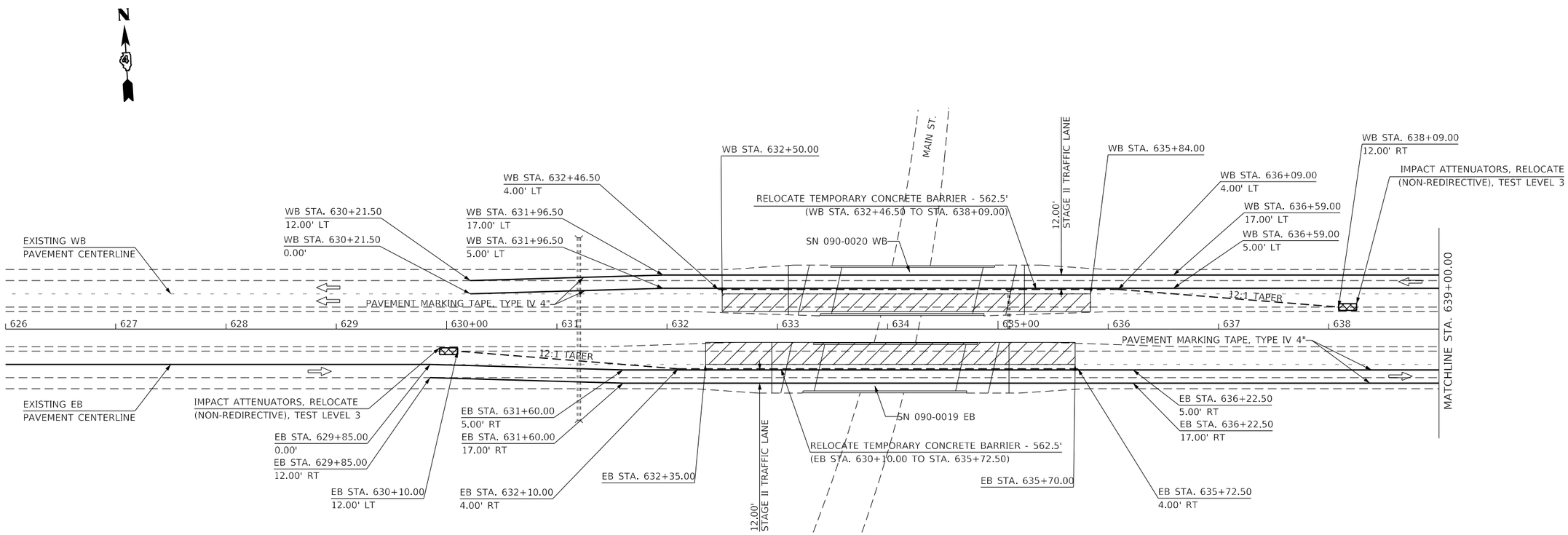

LEGEND:

- WORK AREA
- IMPACT ATTENUATORS, TEMPORARY (NON-REDIRECTIVE), TEST LEVEL 3
- TEMPORARY CONCRETE BARRIER

0 50' 100'

NOTES:

1. OFFSETS ARE MEASURED FROM EXISTING CENTERLINES OF EB OR WB PAVEMENT.
2. OFFSETS TO THE TEMPORARY CONCRETE BARRIER ARE MEASURED TO THE TRAFFIC FACE OF THE BARRIER.
3. TRAFFIC CONTROL SHALL BE IN ACCORDANCE WITH TRAFFIC CONTROL AND PROTECTION STANDARDS 701400 AND 701402 AND IN ACCORDANCE WITH DETAILS ON THIS SHEET.
4. GUARDRAIL OMITTED FOR CLARITY.
5. THE ROADWAY APPROACHES SHOWN IN THE WORK AREAS ON THIS SHEET SHALL BE PATCHED (AS NEEDED), MILLED, AND RESURFACED. SEE PAVEMENT TRANSITION DETAILS.

MODEL: Default
FILE NAME: S:\GENWNWORD\STD&PLNS\Sjuu\03\I-74 3R Morton Ave to Woodford Co\Drawings\CADsheets\68F54\68F54 Proposed Staging Sheets.dgn

USER NAME = diazaa	DESIGNED -	REVISED -	
	DRAWN -	REVISED -	
PLOT SCALE = 100.0000 ' / in.	CHECKED -	REVISED -	
PLOT DATE = 10/29/2020	DATE -	REVISED -	

STATE OF ILLINOIS
DEPARTMENT OF TRANSPORTATION

STAGING DETAILS
STAGE II PLAN

SCALE: SHEET OF SHEETS STA. TO STA.

F.A.I. RTE.	SECTION	COUNTY	TOTAL SHEETS	SHEET NO.
74	90-15(HB(1-4):VB;B)BP,BJR,BRR	TAZEWELL	192	27
		CONTRACT NO. 68F54		
	ILLINOIS	FED. AID PROJECT		

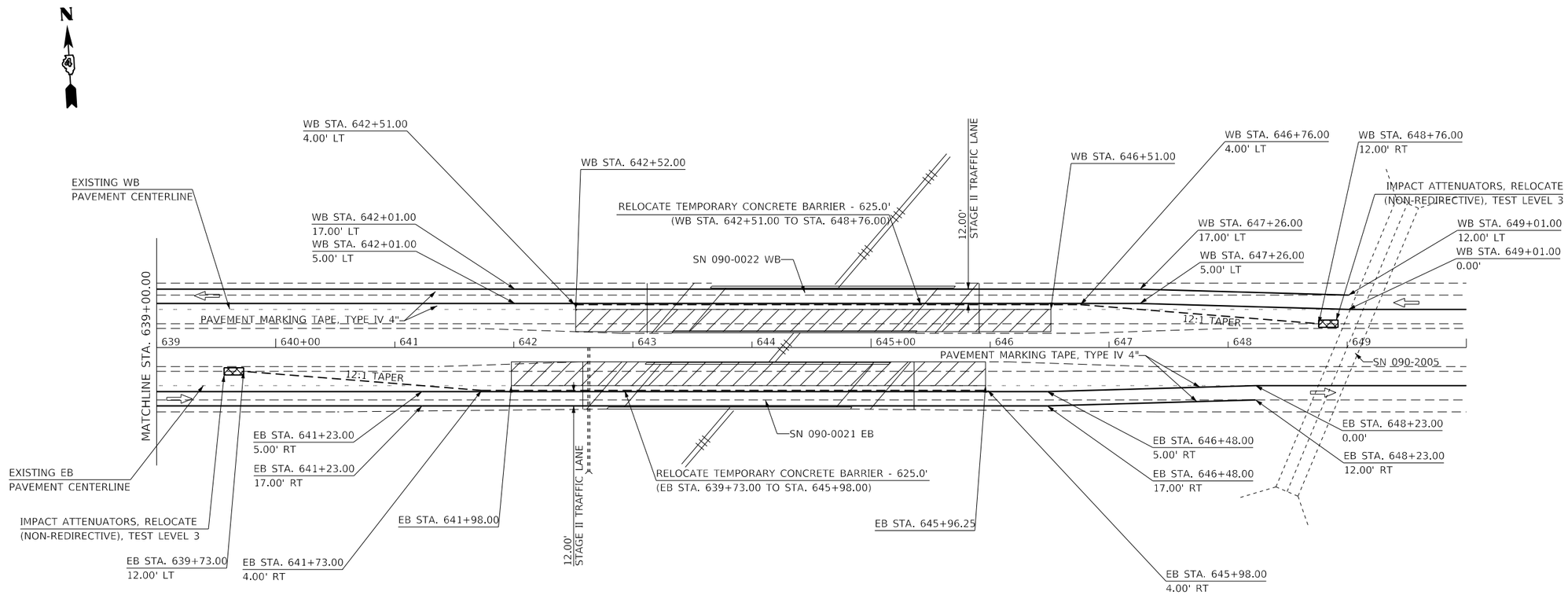

LEGEND:

- WORK AREA
- IMPACT ATTENUATORS, TEMPORARY (NON-REDIRECTIVE), TEST LEVEL 3
- TEMPORARY CONCRETE BARRIER

0 50' 100'

NOTES:

1. OFFSETS ARE MEASURED FROM EXISTING CENTERLINES OF EB OR WB PAVEMENT.
2. OFFSETS TO THE TEMPORARY CONCRETE BARRIER ARE MEASURED TO THE TRAFFIC FACE OF THE BARRIER.
3. TRAFFIC CONTROL SHALL BE IN ACCORDANCE WITH TRAFFIC CONTROL AND PROTECTION STANDARDS 701400 AND 701402 AND IN ACCORDANCE WITH DETAILS ON THIS SHEET.
4. GUARDRAIL OMITTED FOR CLARITY.
5. THE ROADWAY APPROACHES SHOWN IN THE WORK AREAS ON THIS SHEET SHALL BE PATCHED (AS NEEDED), MILLED, AND RESURFACED. SEE PAVEMENT TRANSITION DETAILS.

MODEL: Default
FILE NAME: S:\GEN\WINWORD\STDS\PLNS\Squad03\I-74 JR Morton Ave to Woodford Co\Drawings\CADsheets\68F54\68F54 Proposed Staging Sheets.dgn

USER NAME = diazaa	DESIGNED -	REVISED -	
	DRAWN -	REVISED -	
PLOT SCALE = 100.0000 ' / in.	CHECKED -	REVISED -	
PLOT DATE = 10/29/2020	DATE -	REVISED -	

STATE OF ILLINOIS
DEPARTMENT OF TRANSPORTATION

STAGING DETAILS
STAGE II PLAN

SCALE: | SHEET OF SHEETS | STA. TO STA.

F.A.I. RTE.	SECTION	COUNTY	TOTAL SHEETS	SHEET NO.
74	90-15(HB(1-4);VB;B)BP,BJR,BRR	TAZEWELL	192	28

CONTRACT NO. 68F54

ILLINOIS | FED. AID PROJECT

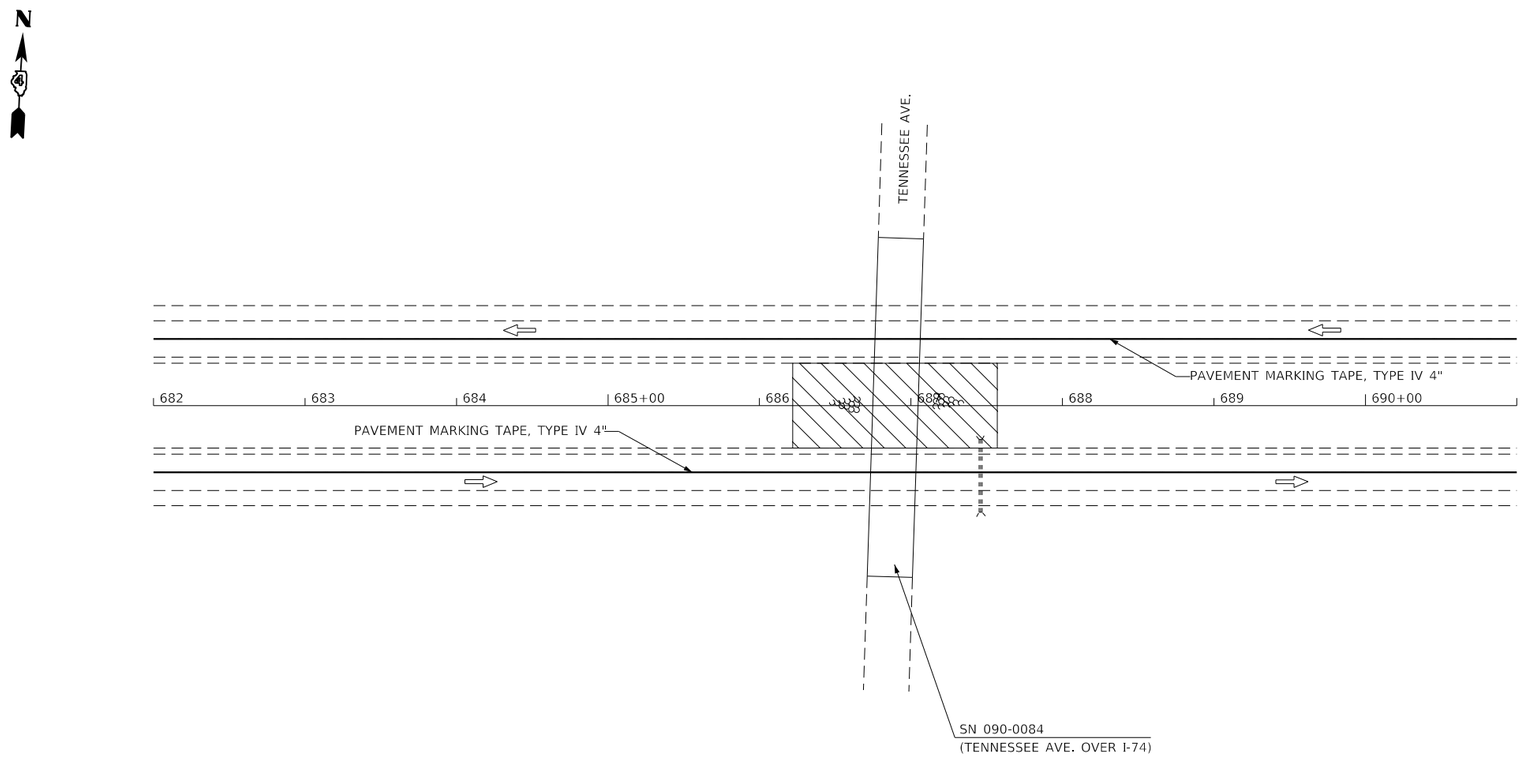

LEGEND:

- WORK AREA
- IMPACT ATTENUATORS, TEMPORARY (NON-REDIRECTIVE), TEST LEVEL 3
- TEMPORARY CONCRETE BARRIER

0 50' 100'

NOTES:

1. OFFSETS ARE MEASURED FROM EXISTING CENTERLINES OF EB OR WB PAVEMENT.
2. OFFSETS TO THE TEMPORARY CONCRETE BARRIER ARE MEASURED TO THE TRAFFIC FACE OF THE BARRIER.
3. TRAFFIC CONTROL SHALL BE IN ACCORDANCE WITH TRAFFIC CONTROL AND PROTECTION STANDARDS 701400 AND 701402 AND IN ACCORDANCE WITH DETAILS ON THIS SHEET.
4. GUARDRAIL OMITTED FOR CLARITY.

MODEL: Default
FILE NAME: S:\GEN\WIN\WORD\STD&PLNS\Squad03\I-74 3R Morton Ave to Woodford Co\Drawings\CADsheets\68F54\68F54 Proposed Staging Sheets.dgn

USER NAME = diazaa	DESIGNED -	REVISED -	
	DRAWN -	REVISED -	
PLOT SCALE = 100.0000 ' / in.	CHECKED -	REVISED -	
PLOT DATE = 10/29/2020	DATE -	REVISED -	

STATE OF ILLINOIS
DEPARTMENT OF TRANSPORTATION

STAGING DETAILS
STAGE II PLAN

SCALE: | SHEET OF SHEETS | STA. TO STA.

F.A.I. RTE.	SECTION	COUNTY	TOTAL SHEETS	SHEET NO.
74	90-15(HB(1-4);VB;B)BP,BJR,BRR	TAZEWELL	192	29

CONTRACT NO. 68F54

ILLINOIS | FED. AID PROJECT

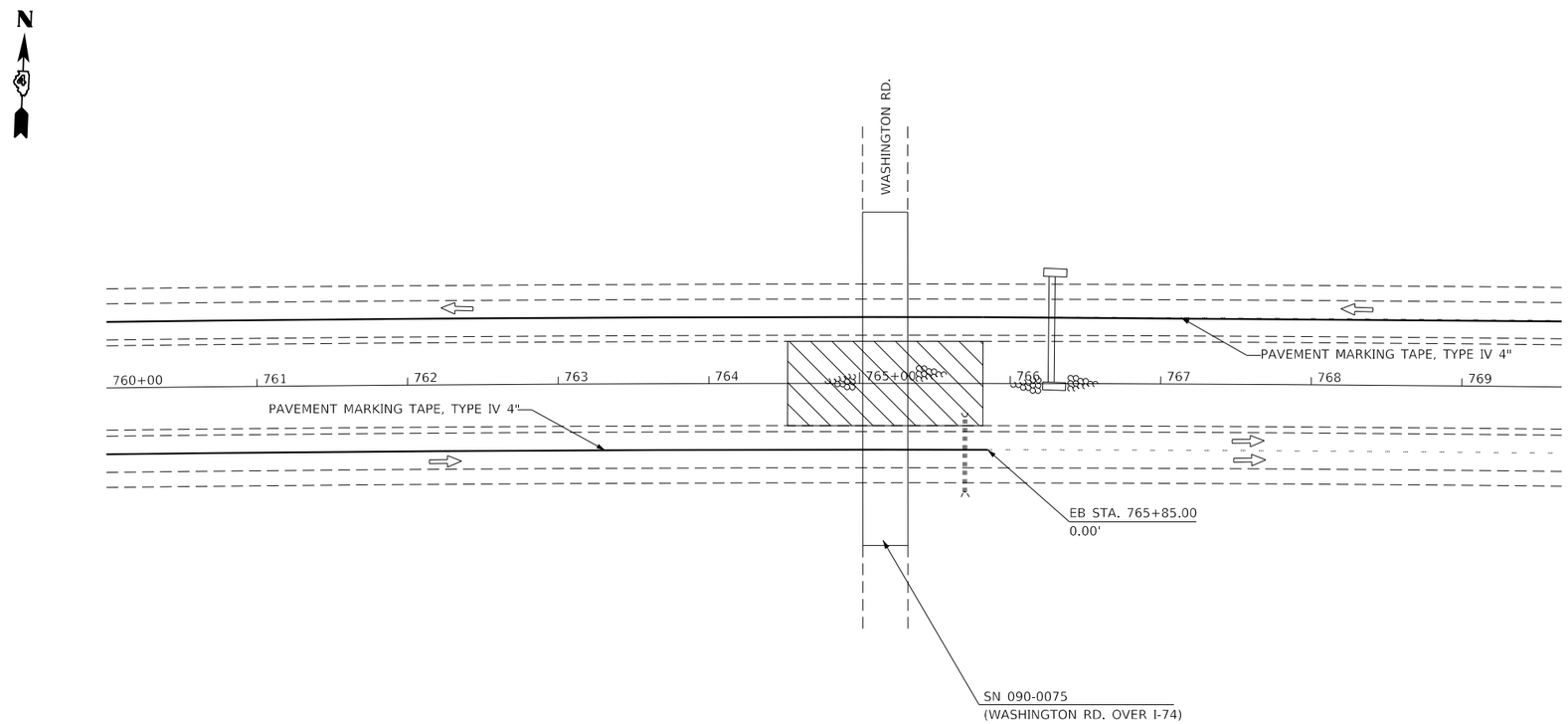

LEGEND:

- WORK AREA
- IMPACT ATTENUATORS, TEMPORARY (NON-REDIRECTIVE), TEST LEVEL 3
- TEMPORARY CONCRETE BARRIER

0 50' 100'

NOTES:

1. OFFSETS ARE MEASURED FROM EXISTING CENTERLINES OF EB OR WB PAVEMENT.
2. OFFSETS TO THE TEMPORARY CONCRETE BARRIER ARE MEASURED TO THE TRAFFIC FACE OF THE BARRIER.
3. TRAFFIC CONTROL SHALL BE IN ACCORDANCE WITH TRAFFIC CONTROL AND PROTECTION STANDARDS 701400 AND 701402 AND IN ACCORDANCE WITH DETAILS ON THIS SHEET.
4. GUARDRAIL OMITTED FOR CLARITY.

MODEL: Default
FILE NAME: S:\GEN\WINWORD\STD\&PLNS\Squad03\I-74 JR Morton Ave to Woodford Co\Drawings\CADsheets\68F54\68F54 Proposed Staging Sheets.dgn

USER NAME = diazaa	DESIGNED -	REVISED -	
	DRAWN -	REVISED -	
PLOT SCALE = 100.0000 ' / in.	CHECKED -	REVISED -	
PLOT DATE = 10/29/2020	DATE -	REVISED -	

STATE OF ILLINOIS
DEPARTMENT OF TRANSPORTATION

STAGING DETAILS
STAGE II PLAN

SCALE: | SHEET OF SHEETS | STA. TO STA.

F.A.I. RTE.	SECTION	COUNTY	TOTAL SHEETS	SHEET NO.
74	90-15(HB(1-4);VB;B)BP,BJR,BRR	TAZEWELL	192	30
		CONTRACT NO. 68F54		
	ILLINOIS	FED. AID PROJECT		

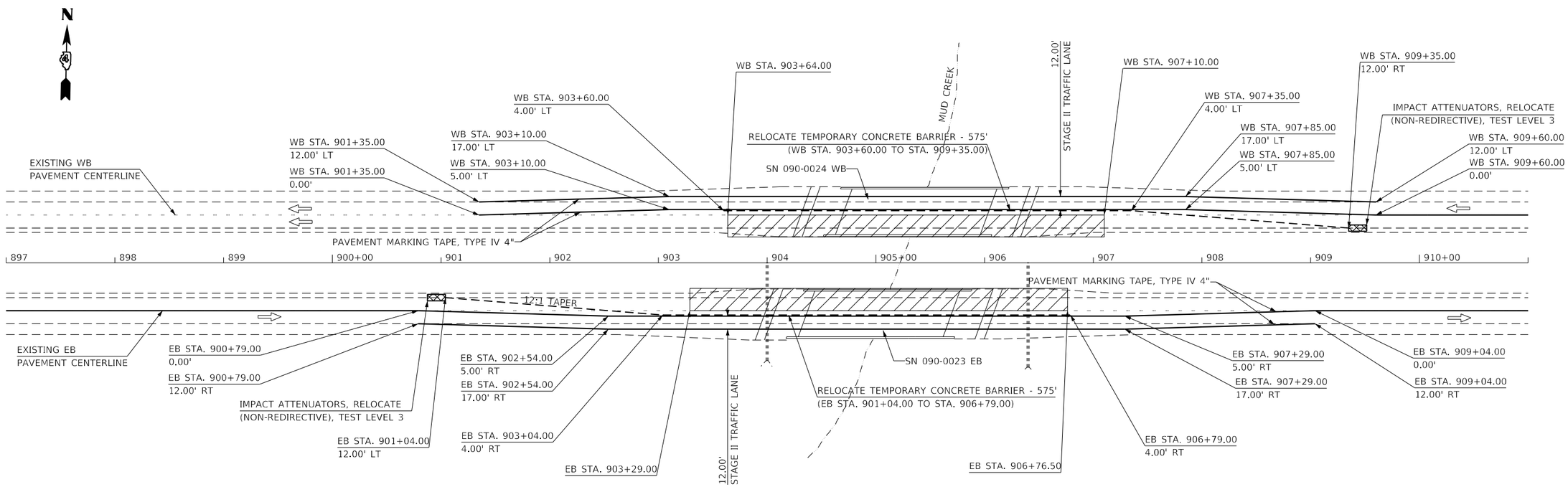

LEGEND:

- WORK AREA
- IMPACT ATTENUATORS, TEMPORARY (NON-REDIRECTIVE), TEST LEVEL 3
- TEMPORARY CONCRETE BARRIER

0 50' 100'

NOTES:

1. OFFSETS ARE MEASURED FROM EXISTING CENTERLINES OF EB OR WB PAVEMENT.
2. OFFSETS TO THE TEMPORARY CONCRETE BARRIER ARE MEASURED TO THE TRAFFIC FACE OF THE BARRIER.
3. TRAFFIC CONTROL SHALL BE IN ACCORDANCE WITH TRAFFIC CONTROL AND PROTECTION STANDARDS 701400 AND 701402 AND IN ACCORDANCE WITH DETAILS ON THIS SHEET.
4. GUARDRAIL OMITTED FOR CLARITY.
5. THE ROADWAY APPROACHES SHOWN IN THE WORK AREAS ON THIS SHEET SHALL BE PATCHED (AS NEEDED), MILLED, AND RESURFACED. SEE PAVEMENT TRANSITION DETAILS.

MODEL: Default
FILE NAME: S:\GEN\WINWORD\STD&PLNS\Squid03\I-74 3R Morton Ave to Woodford Co\Drawings\CADsheets\68F54\68F54 Proposed Staging Sheets.dgn

USER NAME = diazaa	DESIGNED -	REVISED -	
	DRAWN -	REVISED -	
PLOT SCALE = 100.0000 ' / in.	CHECKED -	REVISED -	
PLOT DATE = 10/29/2020	DATE -	REVISED -	

STATE OF ILLINOIS
DEPARTMENT OF TRANSPORTATION

STAGING DETAILS
STAGE II PLAN

SCALE: | SHEET OF SHEETS | STA. TO STA.

F.A.I. RTE.	SECTION	COUNTY	TOTAL SHEETS	SHEET NO.
74	90-15(HB(1-4):VB;B)BP,BJR,BRR	TAZEWELL	192	31
		CONTRACT NO. 68F54		
	ILLINOIS	FED. AID PROJECT		

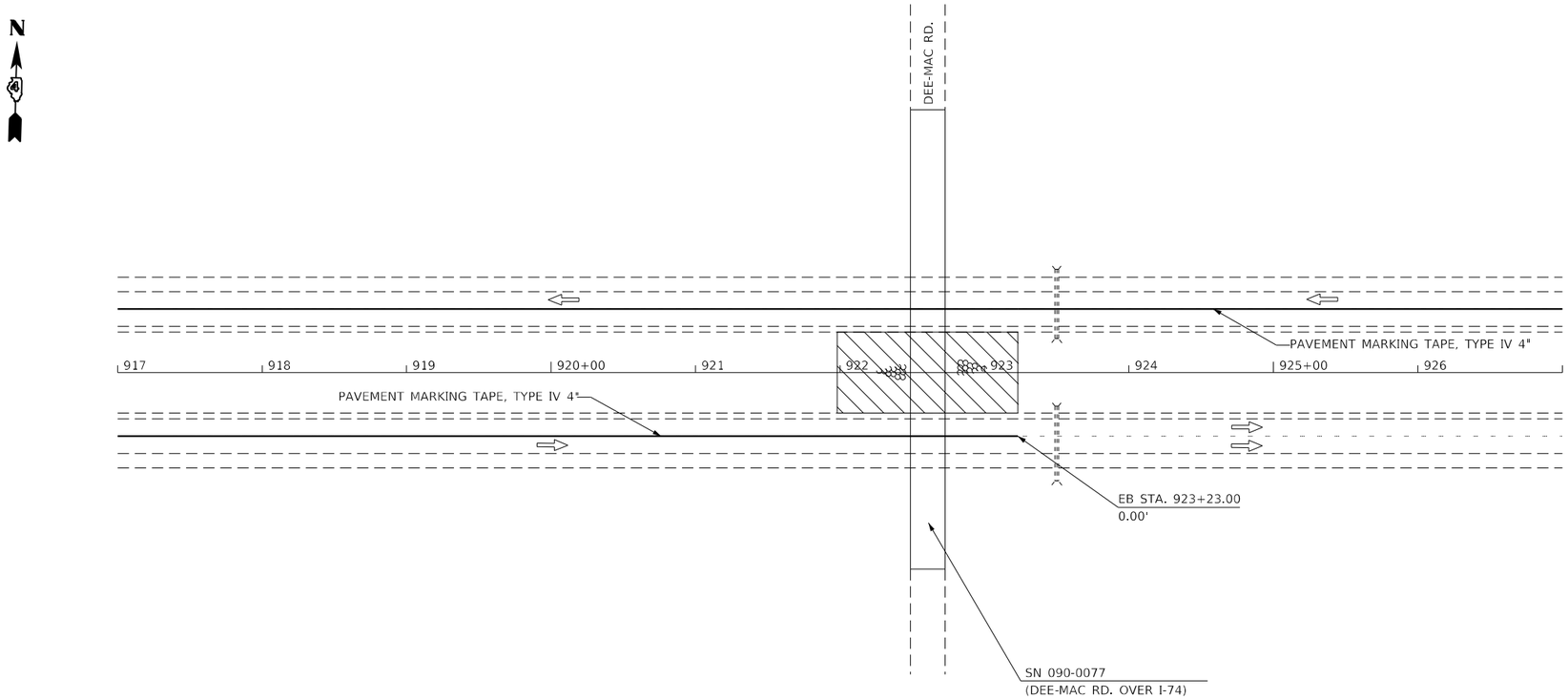

LEGEND:

- WORK AREA
- IMPACT ATTENUATORS, TEMPORARY (NON-REDIRECTIVE), TEST LEVEL 3
- TEMPORARY CONCRETE BARRIER

0 50' 100'

NOTES:

1. OFFSETS ARE MEASURED FROM EXISTING CENTERLINES OF EB OR WB PAVEMENT.
2. OFFSETS TO THE TEMPORARY CONCRETE BARRIER ARE MEASURED TO THE TRAFFIC FACE OF THE BARRIER.
3. TRAFFIC CONTROL SHALL BE IN ACCORDANCE WITH TRAFFIC CONTROL AND PROTECTION STANDARDS 701400 AND 701402 AND IN ACCORDANCE WITH DETAILS ON THIS SHEET.
4. GUARDRAIL OMITTED FOR CLARITY.

MODEL: Default
FILE NAME: S:\GEN\IN\WORD\STD&PLNS\Suu\d03\I-74_3R Morton Ave to Woodford Co\Drawings\CAD-Sheets\68F54\68F54 Proposed Staging Sheets.dgn

USER NAME = diazaa	DESIGNED -	REVISED -	
	DRAWN -	REVISED -	
PLOT SCALE = 100.0000 ' / in.	CHECKED -	REVISED -	
PLOT DATE = 10/29/2020	DATE -	REVISED -	

STATE OF ILLINOIS
DEPARTMENT OF TRANSPORTATION

STAGING DETAILS
STAGE II PLAN

SCALE: | SHEET OF SHEETS | STA. TO STA.

F.A.I. RTE.	SECTION	COUNTY	TOTAL SHEETS	SHEET NO.
74	90-15(HB(1-4):VB;B)BP,BJR,BRR	TAZEWELL	192	32
		CONTRACT NO. 68F54		
	ILLINOIS	FED. AID PROJECT		

DEE-MAC ROAD CLOSURE AND DETOUR

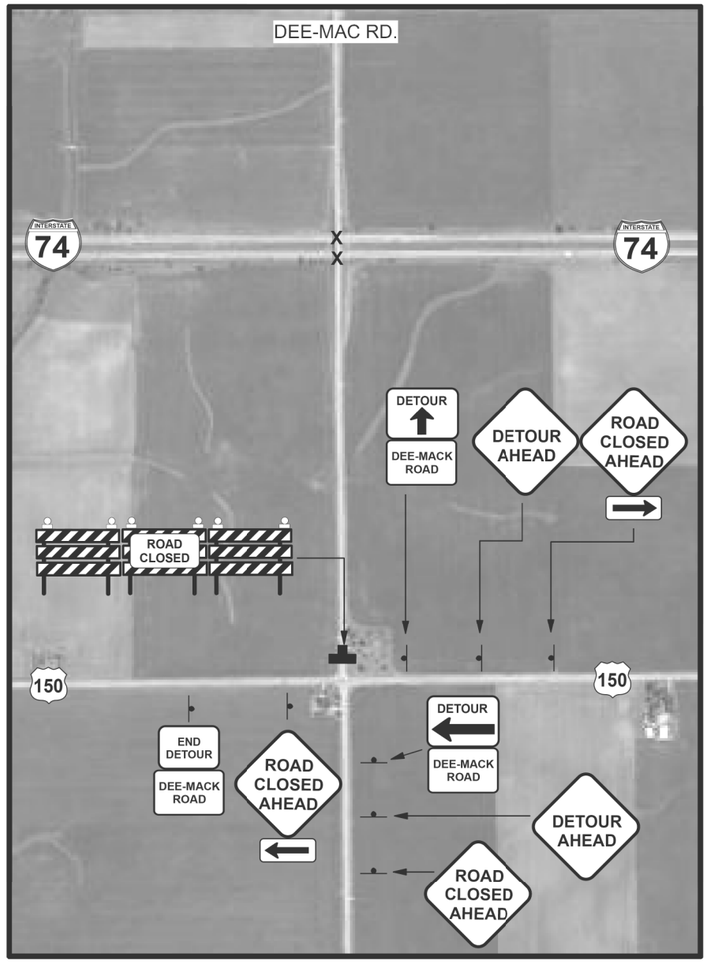

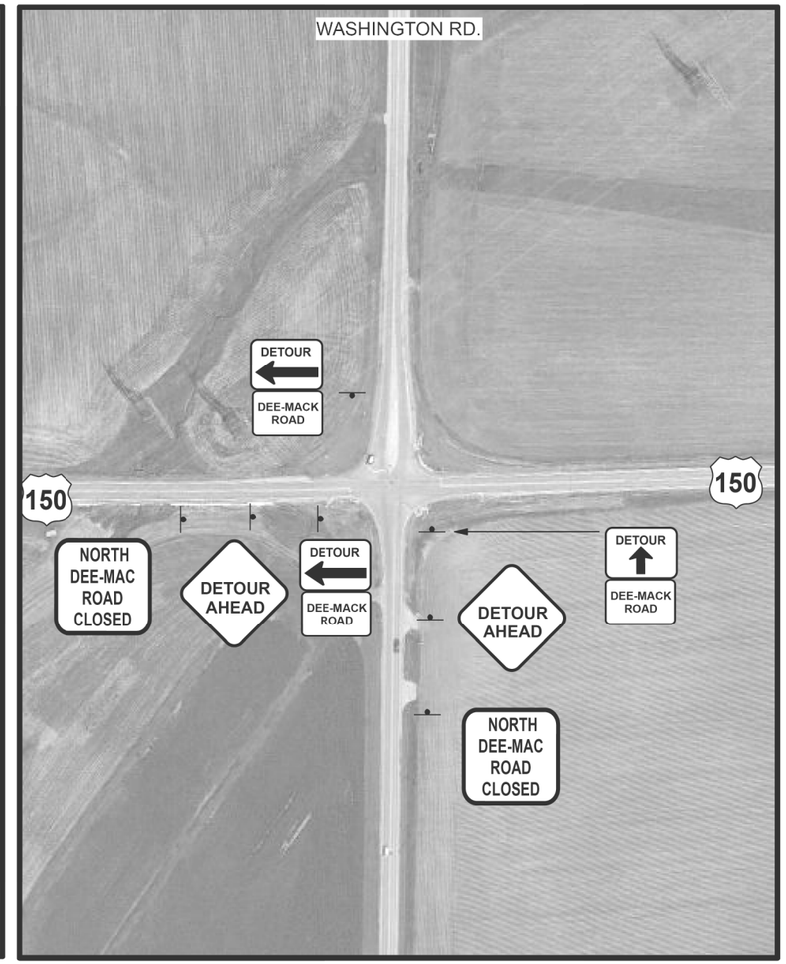

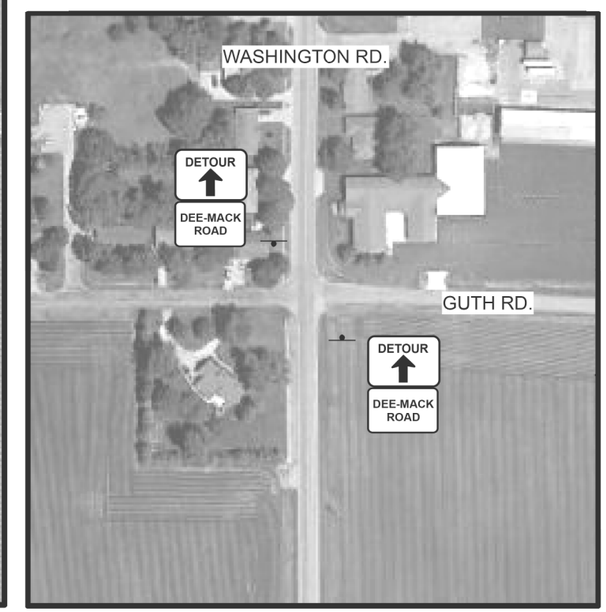

MODEL: Default
FILE NAME: O:\PD\GEN\WIN\WORD\STD\PLN\Squad03\I-74 JR Morton Ave to Woodford Co\Drawings\CADsheets\68F54\68F54 Cover Sheets_R5.dgn

USER NAME = horstkj	DESIGNED -	REVISED -	STATE OF ILLINOIS DEPARTMENT OF TRANSPORTATION
	DRAWN -	REVISED -	
PLOT SCALE = 100.0000 ' / in.	CHECKED -	REVISED -	
PLOT DATE = 10/29/2020	DATE -	REVISED -	

ROAD CLOSURE AND DETOUR DETAILS
DEE–MACK RD.

SCALE: | SHEET 33 OF 192 SHEETS | STA. TO STA.

F.A.I. RTE.	SECTION	COUNTY	TOTAL SHEETS	SHEET NO.
74	90-15[HB(1-4);VB;B]BP,BJR,BRR	TAZEWELL	192	33
		CONTRACT NO. 68F54		
		ILLINOIS		

DEE-MAC ROAD
CLOSURE AND DETOUR

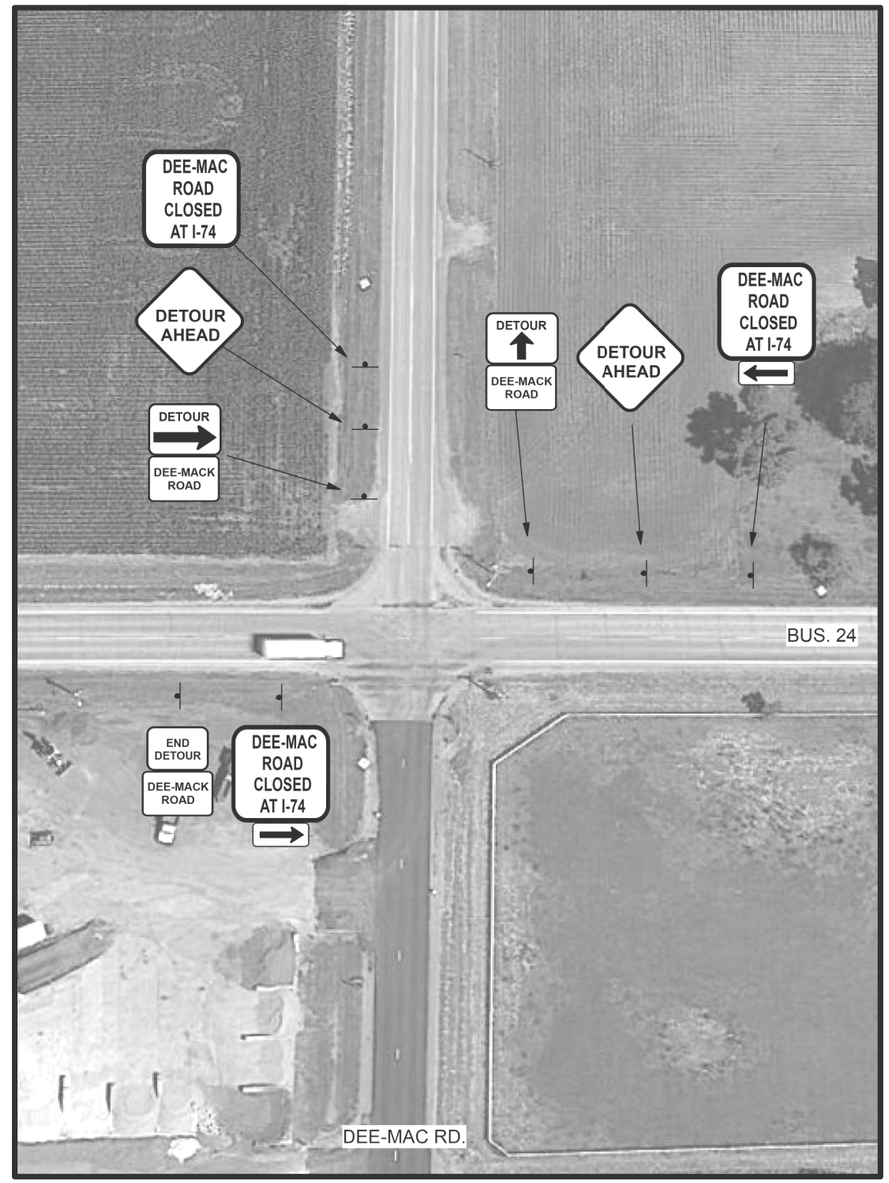

MODEL: Default
FILE NAME: G:\PD\GEN\WINWORD\STD&PLNS\Squad031I-74_3R_Morton Ave to Woodford Co\Drawings\CAD\sheets\68F54\68F54 Cover Sheets_MS.dgn

USER NAME = horstkj	DESIGNED -	REVISED -	
	DRAWN -	REVISED -	
PLOT SCALE = 100.0000 ' / in.	CHECKED -	REVISED -	
PLOT DATE = 10/29/2020	DATE -	REVISED -	

STATE OF ILLINOIS
DEPARTMENT OF TRANSPORTATION

ROAD CLOSURE AND DETOUR DETAILS
DEE–MACK RD.

SCALE: | SHEET 34 OF 192 SHEETS | STA. TO STA.

F.A.I. RTE.	SECTION	COUNTY	TOTAL SHEETS	SHEET NO.
74	90-15(HB(1-4);VB;B)BP,BJR,BRR	TAZEWELL	192	34
		CONTRACT NO. 68F54		
	ILLINOIS			

DEE-MAC ROAD
CLOSURE AND DETOUR

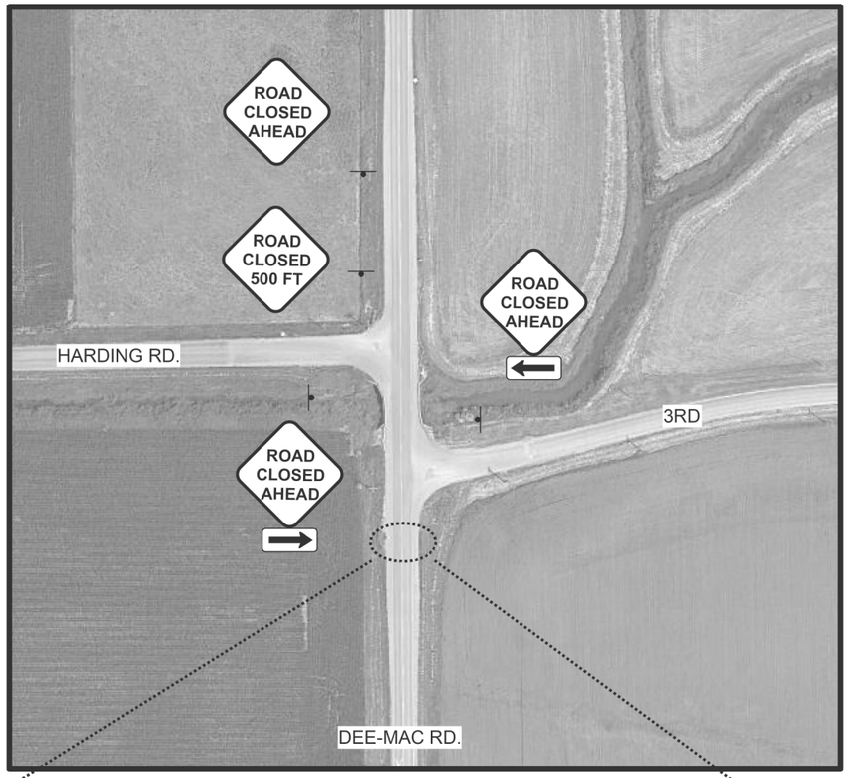

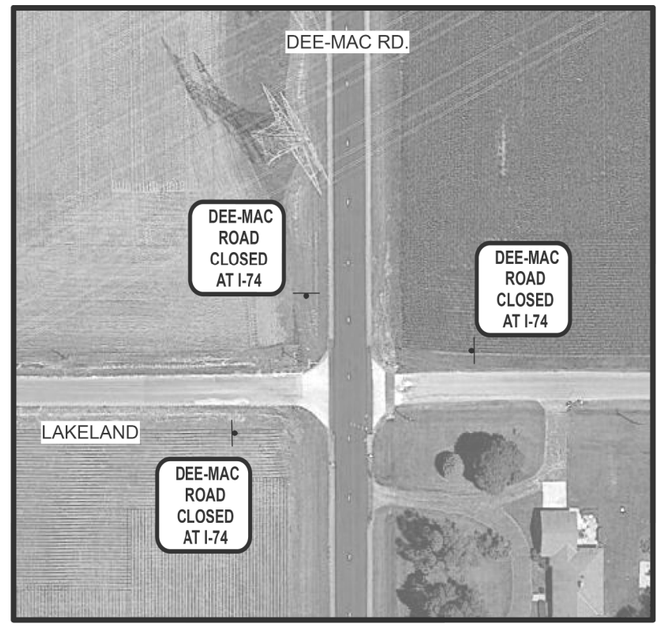

CLOSURE AND DETOUR NOTES:

TWO (2) PORTABLE CHANGEABLE MESSAGE SIGNS SHALL BE PLACED ON NORTHBOUND/SOUTHBOUND DEE-MAC RD.

SEVEN (7) CALENDAR DAYS PRIOR TO TO THE CLOSURE TO ADVANCE WARN THE PUBLIC. THE LOCATIONS SHALL BE IN CLOSE PROXIMITY TO THE STRUCTURE.

ALL SIGNS SHOWN ARE BLACK ON ORANGE. DETOUR SIGNS SHALL BE SIZED PER THE MUTCD FOR CONVENTIONAL ROADS.

STREET SIGNS SHALL BE SIZED TO ACCOMODATE 4" LETTERING.

DEE-MAC ROAD CLOSED AT I-74 = TYPICAL 48" X 48" BLACK ON ORANGE.

EACH SIDE OF THE STRUCTURE ON DEE-MACROADSHALL BE AS SHOWN PER STD. 701901-ROAD CLOSED TO ALL TRAFFIC.

= POST MOUNTED SIGN- SIGNS ON WASHINGTON SQUARE MAY BE TEMPORARY STAND MOUNTED (NO A-FRAME STYLE) AS NECESSARY.

MODEL: Default
FILE NAME: G:\PD\GEN\WINWORD\STD&PLNS\Squad031-74 3R Morton Ave to Woodford Co\Drawings\CAD-Sheets\68F54\68F54 Cover Sheets MS.dgn

USER NAME = horstkj	DESIGNED -	REVISED -	STATE OF ILLINOIS DEPARTMENT OF TRANSPORTATION	ROAD CLOSURE AND DETOUR DETAILS DEE–MACK RD.	F.A.I. RTE.	SECTION	COUNTY	TOTAL SHEETS	SHEET NO.
	DRAWN -	REVISED -			74	90-15(HB(1-4);VB;B)BP,BJR,BRR	TAZEWELL	192	35
PLOT SCALE = 100.0000 ' / in.	CHECKED -	REVISED -					CONTRACT NO. 68F54		
PLOT DATE = 10/29/2020	DATE -	REVISED -		SCALE: SHEET 35 OF 192 SHEETS STA. TO STA.		ILLINOIS			

WASHINGTON ROAD CLOSURE AND DETOUR

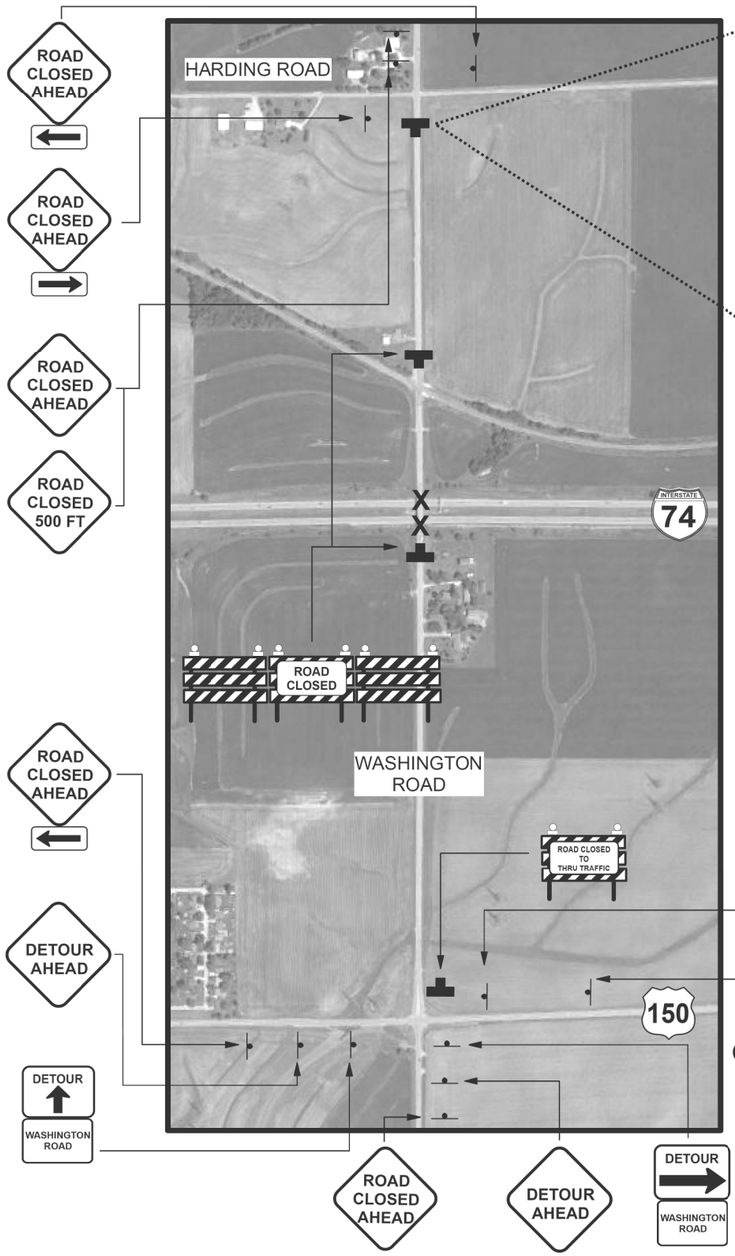

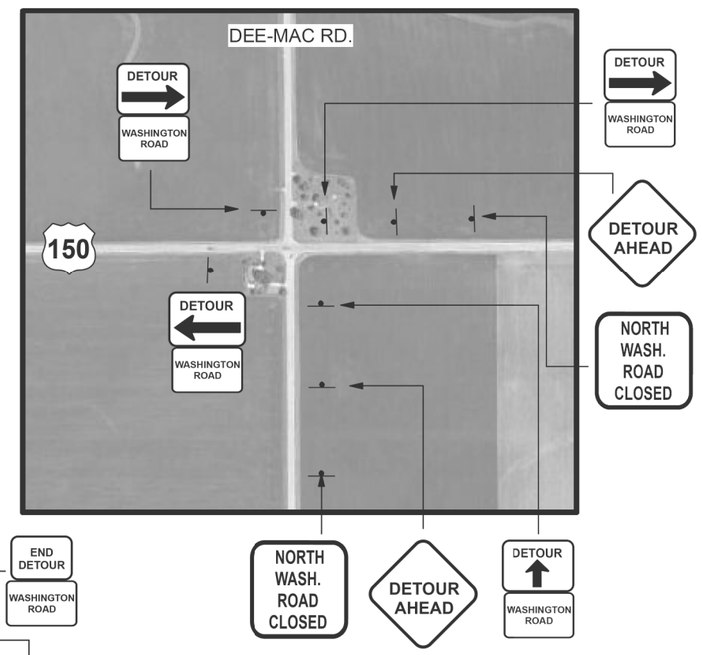

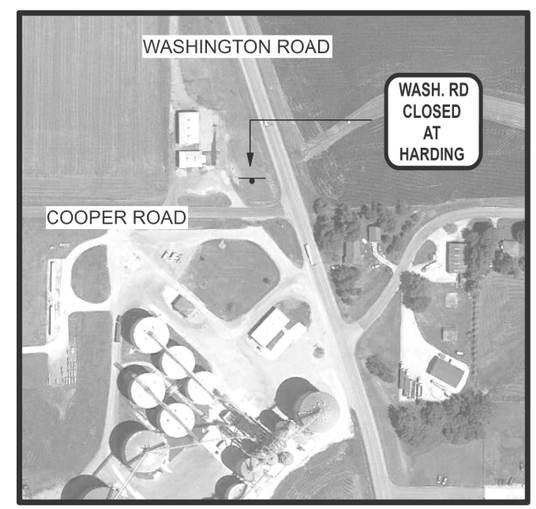

MODEL: Default
FILE NAME: O:\PD\GEN\WINWORD\STD\PLNS\Squid\031-74 3R Morton Ave to Woodford Co\Drawings\CADsheets\68F54\68F54 Cover Sheets MS.dgn

USER NAME = horstkj	DESIGNED -	REVISED -
	DRAWN -	REVISED -
PLOT SCALE = 100.0000 ' / in.	CHECKED -	REVISED -
PLOT DATE = 10/29/2020	DATE -	REVISED -

STATE OF ILLINOIS
DEPARTMENT OF TRANSPORTATION

ROAD CLOSURE AND DETOUR DETAILS
WASHINGTON RD.

SCALE: | SHEET 36 OF 192 SHEETS | STA. TO STA.

F.A.I. RTE.	SECTION	COUNTY	TOTAL SHEETS	SHEET NO.
74	90-15[HB(1-4);VB;B]BP,BJR,BRR	TAZEWELL	192	36
		CONTRACT NO. 68F54		
		ILLINOIS		

WASHINGTON ROAD CLOSURE AND DETOUR

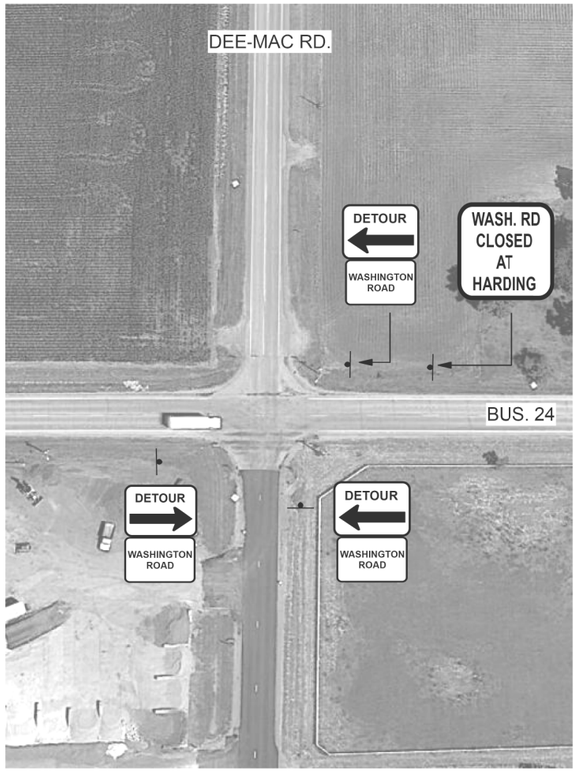

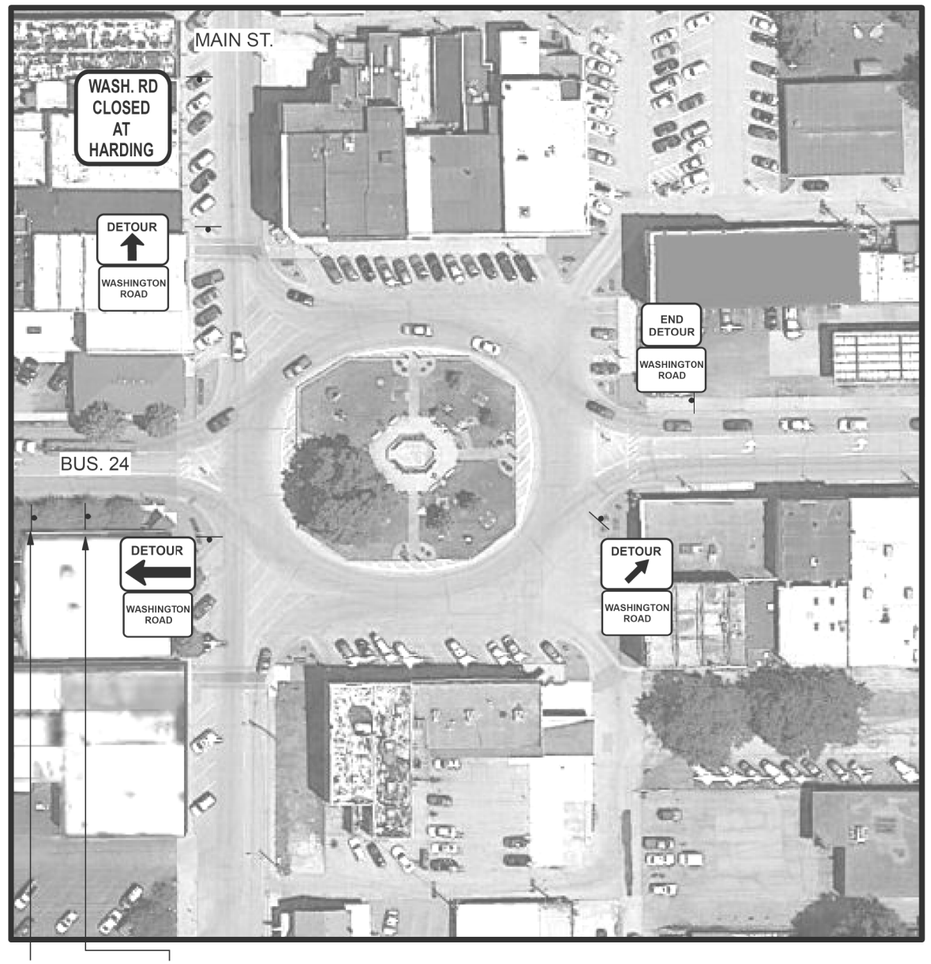

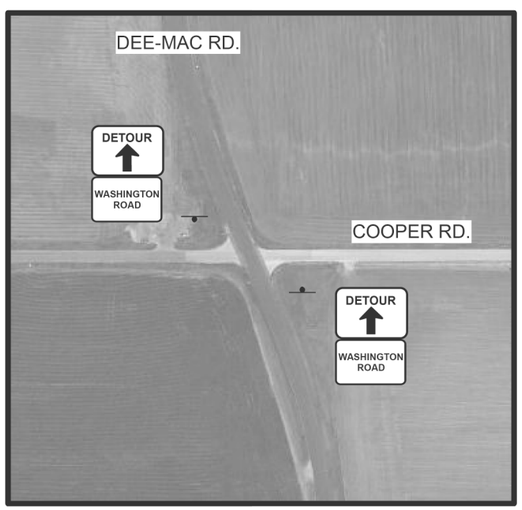

WASH. RD CLOSED AT HARDING

DETOUR
WASHINGTON ROAD

CLOSURE AND DETOUR NOTES:

TWO (2) PORTABLE CHANGEABLE MESSAGE SIGNS SHALL BE PLACED ON NORTHBOUND/SOUTHBOUND WASHINGTON RD. SEVEN (7) CALENDAR DAYS PRIOR TO TO THE CLOSURE TO ADVANCE WARN THE PUBLIC. THE LOCATIONS SHALL BE IN CLOSE PROXIMITY TO THE STRUCTURE.

ALL SIGNS SHOWN ARE BLACK ON ORANGE. DETOUR SIGNS SHALL BE SIZED PER THE MUTCD FOR CONVENTIONAL ROADS.

STREET SIGNS SHALL BE SIZED TO ACCOMODATE 4" LETTERING.

WASH. RD CLOSED AT HARDING = TYPICAL 48" X 48" BLACK ON ORANGE.

EACH SIDE OF THE STRUCTURE ON WASHINGTON ROAD SHALL BE AS SHOWN PER STD. 701901-ROAD CLOSED TO ALL TRAFFIC.

= POST MOUNTED SIGN- SIGNS ON WASHINGTON SQUARE MAY BE TEMPORARY STAND MOUNTED (NO A-FRAME STYLE) AS NECESSARY.

MODEL: Default
FILE NAME: O:\PD\GEN\WINWORD\STD&PL\NSSquad03\I-74 3R Morton Ave to Woodford Co\Drawings\CADsheets\68F54\68F54 Cover Sheets M5.dgn

USER NAME = horstkj	DESIGNED -	REVISED -	STATE OF ILLINOIS DEPARTMENT OF TRANSPORTATION
	DRAWN -	REVISED -	
PLOT SCALE = 100.0000 ' / in.	CHECKED -	REVISED -	
PLOT DATE = 10/29/2020	DATE -	REVISED -	

ROAD CLOSURE AND DETOUR DETAILS
WASHINGTON RD.

SCALE: | SHEET 37 OF 192 SHEETS | STA. TO STA.

F.A.I. RTE.	SECTION	COUNTY	TOTAL SHEETS	SHEET NO.
74	90-15(HB(1-4);VB;B)BP,BJR,BRR	TAZEWELL	192	37
		CONTRACT NO. 68F54		
		ILLINOIS		

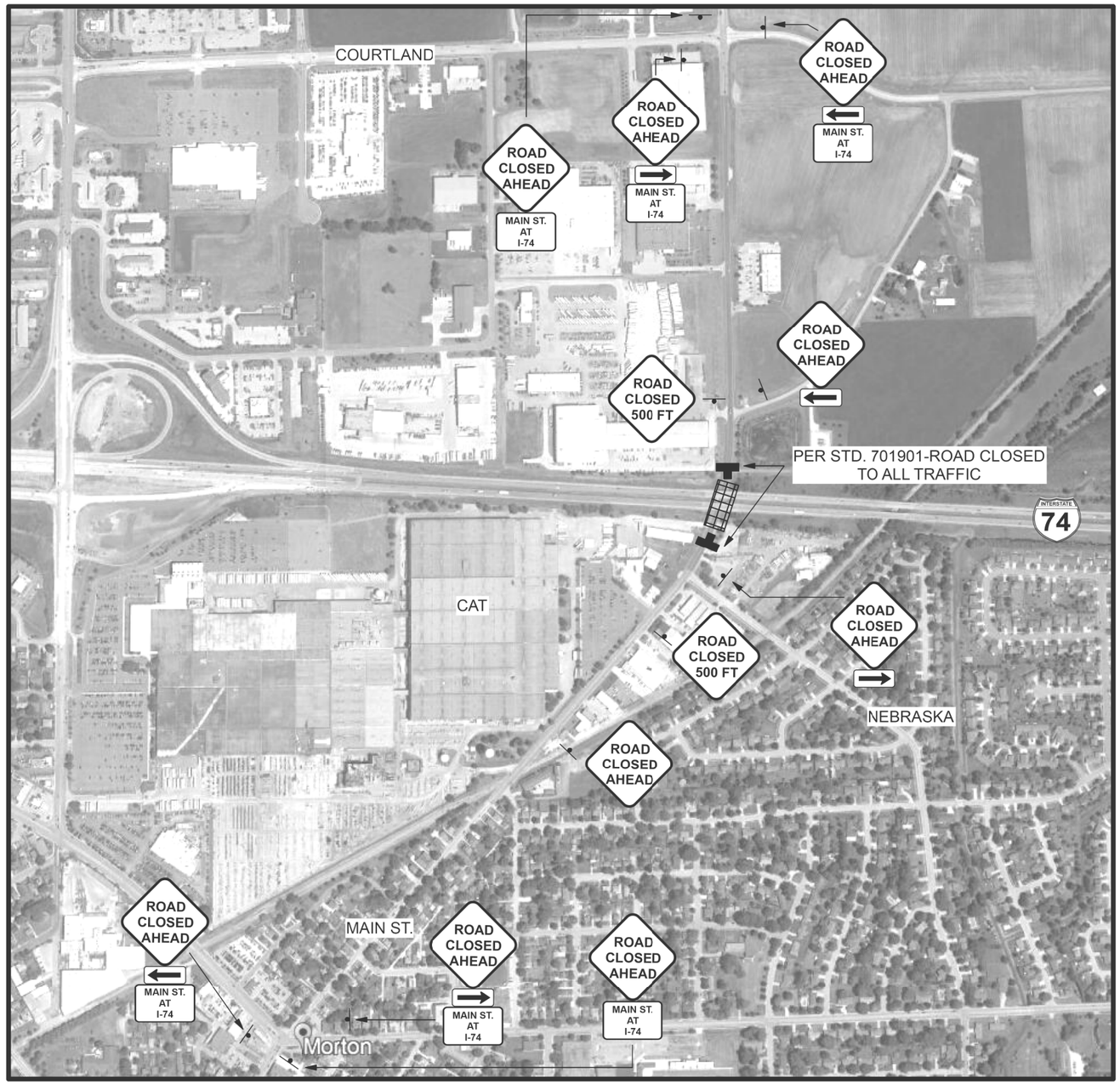

MAIN ST. CLOSURE DETAILS AT I-74 OVERPASS

TWO (2) PORTABLE CHANGEABLE MESSAGE SIGNS SHALL BE PLACED NEAR THE STRUCTURE-BOTH NORTH AND SOUTHBOUND- FOR SEVEN (7) CALENDAR DAYS IN ADVANCE OF THE ROAD CLOSURE.

SIGNS SHALL BE POST MOUNTED INTO THE GROUND.

MAIN ST. SIGNS SHALL BE BLACK ON ORANGE WITH A MINIMUM 4" LETTERING.

MODEL: Default
FILE NAME: O:\PDA\GEN\WINWORD\STD&PLN\Squad031-74 3R Morton Ave to Woodford Co\Drawings\CAD\sheets\68F54\68F54 Cover Sheets MS.dgn

USER NAME = horstkj	DESIGNED -	REVISED -	
	DRAWN -	REVISED -	
PLOT SCALE = 100.0000 ' / in.	CHECKED -	REVISED -	
PLOT DATE = 10/29/2020	DATE -	REVISED -	

STATE OF ILLINOIS
DEPARTMENT OF TRANSPORTATION

ROAD CLOSURE AND DETOUR DETAILS
MAIN ST.

SCALE: | SHEET 38 OF 192 SHEETS | STA. | TO STA.

F.A.I. RTE.	SECTION	COUNTY	TOTAL SHEETS	SHEET NO.
74	90-15(HB(1-4);VB;B)BP,B)R,BRR	TAZEWELL	192	38
		CONTRACT NO. 68F54		
	ILLINOIS			

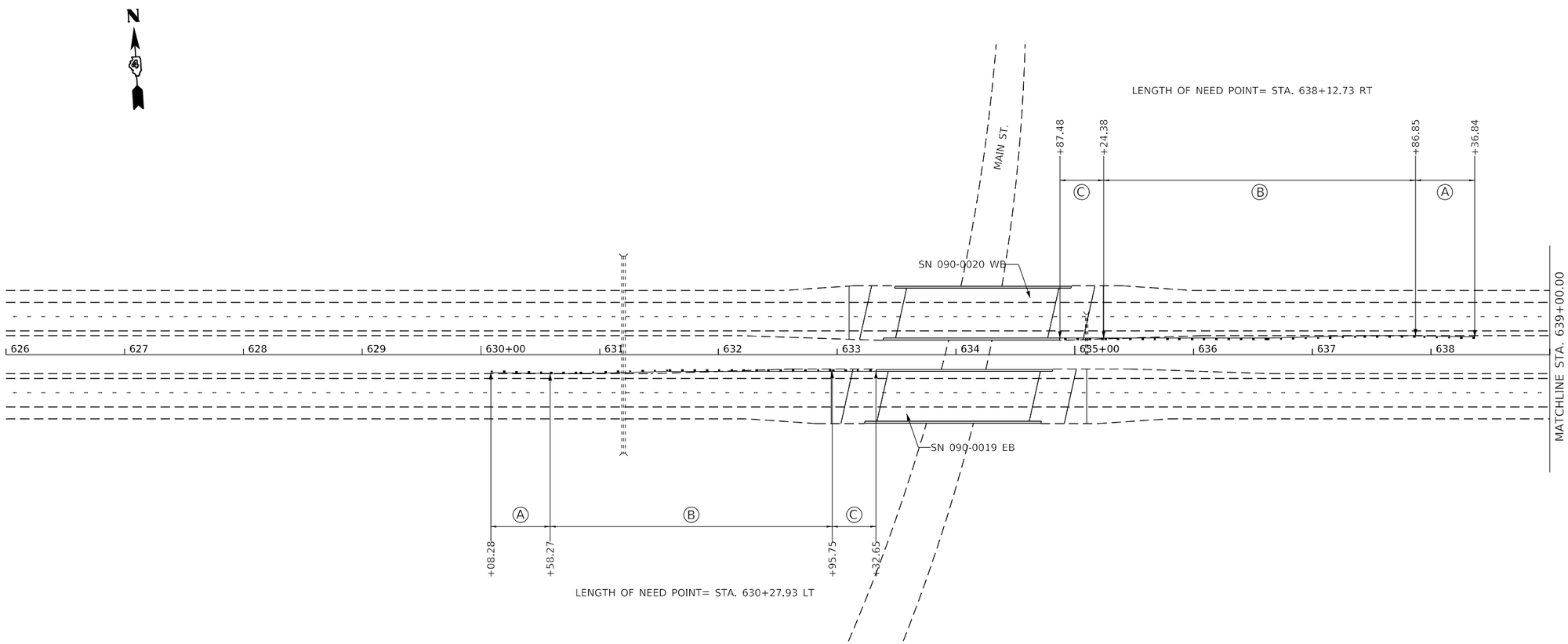

LEGEND:

Ⓐ TRAFFIC BARRIER TERMINAL, TYPE 1 (SPECIAL) TANGENT

Ⓑ STEEL PLATE BEAM GUARDRAIL, TYPE A, 6 FOOT POSTS

Ⓒ TRAFFIC BARRIER TERMINAL, TYPE 6

0 50' 100'

NOTES:

1. THE FACE OF THE GUARDRAIL SHALL MATCH THE OUTSIDE EDGE OF HMA SHOULDER AS DETAILED IN THE PRE-STAGE PLANS.

MODEL: Default
FILE NAME: S:\GENR\WORD\STD&PLNS\Sjuus\03\I-74 3R Morton Ave to Woodford Co\Drawings\CADsheets\68F54\68F54 Proposed Staging Sheets.dgn

USER NAME = diazaa	DESIGNED -	REVISED -	
	DRAWN -	REVISED -	
PLOT SCALE = 100.0000 ' / in.	CHECKED -	REVISED -	
PLOT DATE = 10/29/2020	DATE -	REVISED -	

STATE OF ILLINOIS
DEPARTMENT OF TRANSPORTATION

GUARDRAIL DETAILS

SCALE: SHEET OF SHEETS STA. TO STA.

F.A.I. RTE.	SECTION	COUNTY	TOTAL SHEETS	SHEET NO.
74	90-15(HB(1-4):VB;B)BP,BJR,BRR	TAZEWELL	192	39

CONTRACT NO. 68F54

ILLINOIS FED. AID PROJECT

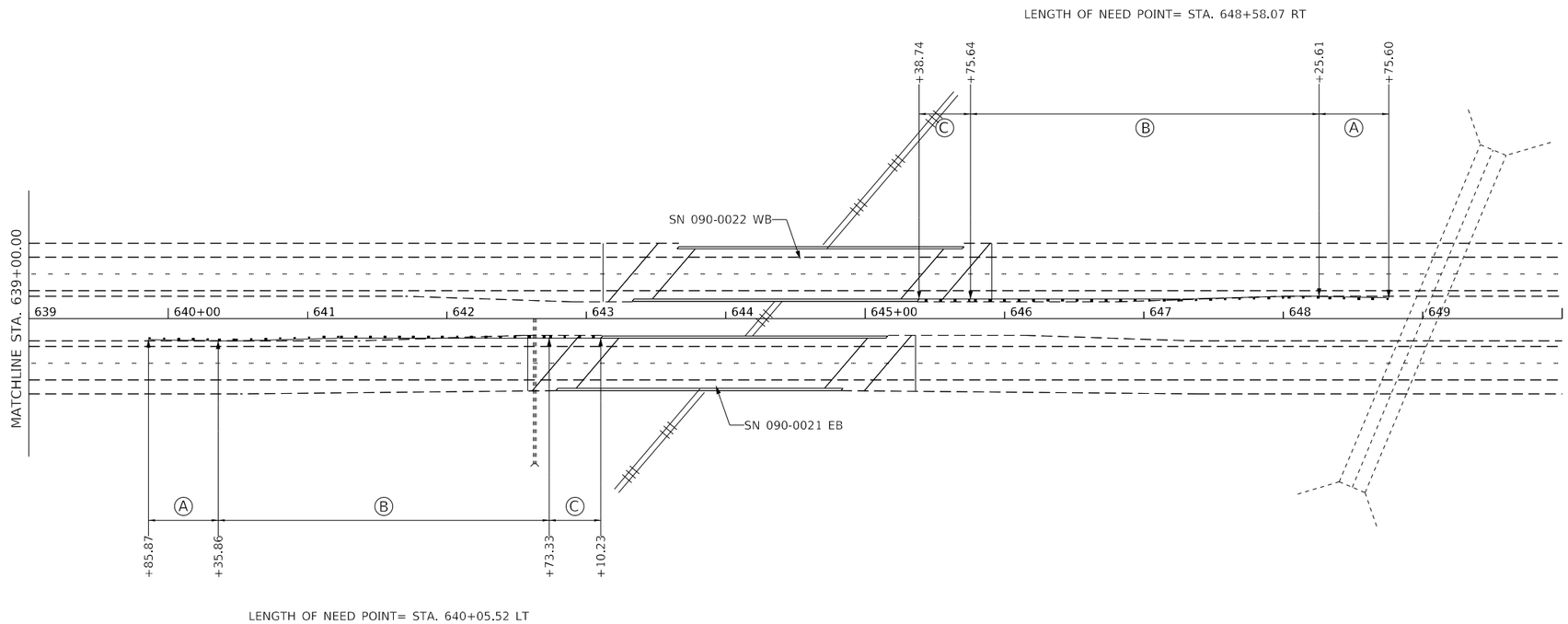

LEGEND:

- (A) TRAFFIC BARRIER TERMINAL, TYPE 1 (SPECIAL) TANGENT
- (B) STEEL PLATE BEAM GUARDRAIL, TYPE A, 6 FOOT POSTS
- (C) TRAFFIC BARRIER TERMINAL, TYPE 6

0 50' 100'

NOTES:

1. THE FACE OF THE GUARDRAIL SHALL MATCH THE OUTSIDE EDGE OF HMA SHOULDER AS DETAILED IN THE PRE-STAGE PLANS.

MODEL: Default
FILE NAME: S:\GEN\WINWORD\STD\PLNS\Squad03\I-74 3R Morton Ave to Woodford Co\Drawings\CADsheets\68F54\68F54 Proposed Staging Sheets.dgn

USER NAME = diazaa	DESIGNED -	REVISED -	
	DRAWN -	REVISED -	
PLOT SCALE = 100.0000 ' / in.	CHECKED -	REVISED -	
PLOT DATE = 10/29/2020	DATE -	REVISED -	

STATE OF ILLINOIS
DEPARTMENT OF TRANSPORTATION

GUARDRAIL DETAILS

SCALE: | SHEET OF SHEETS | STA. TO STA.

F.A.I. RTE.	SECTION	COUNTY	TOTAL SHEETS	SHEET NO.
74	90-15(HB(1-4);VB;B)BP,BJR,BRR	TAZEWELL	192	40

CONTRACT NO. 68F54

ILLINOIS | FED. AID PROJECT

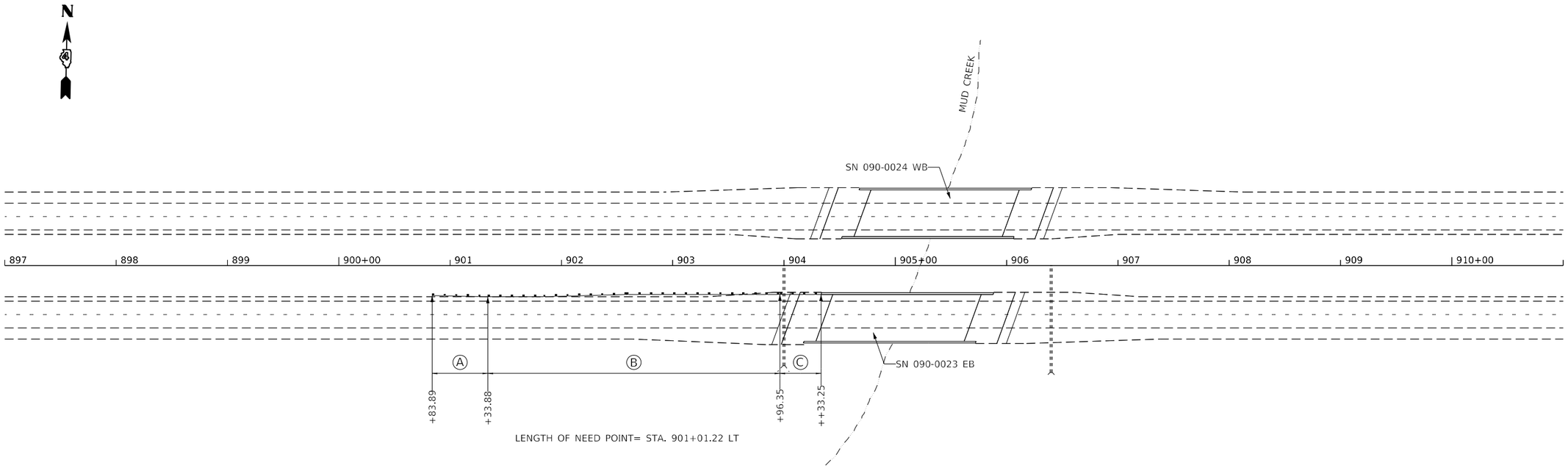

LEGEND:

Ⓐ TRAFFIC BARRIER TERMINAL, TYPE 1 (SPECIAL) TANGENT

Ⓑ STEEL PLATE BEAM GUARDRAIL, TYPE A, 6 FOOT POSTS

Ⓒ TRAFFIC BARRIER TERMINAL, TYPE 6

0 50' 100'

NOTES:

1. THE FACE OF THE GUARDRAIL SHALL MATCH THE OUTSIDE EDGE OF HMA SHOULDER AS DETAILED IN THE PRE-STAGE PLANS.

MODEL: Default
FILE NAME: S:\GENWIN\WORD\STD&PLNS\Sulu\03\I-74 3R Morton Ave to Woodford Co\Drawings\CADsheets\68F54\68F54 Proposed Staging Sheets.dgn

USER NAME = diazaa	DESIGNED -	REVISED -	
	DRAWN -	REVISED -	
PLOT SCALE = 100.0000 ' / in.	CHECKED -	REVISED -	
PLOT DATE = 10/29/2020	DATE -	REVISED -	

STATE OF ILLINOIS
DEPARTMENT OF TRANSPORTATION

GUARDRAIL DETAILS

SCALE: | SHEET OF SHEETS | STA. TO STA.

F.A.I. RTE.	SECTION	COUNTY	TOTAL SHEETS	SHEET NO.
74	90-15(HB(1-4):VB;B)BP,BJR,BRR	TAZEWELL	192	41

CONTRACT NO. 68F54

ILLINOIS | FED. AID PROJECT

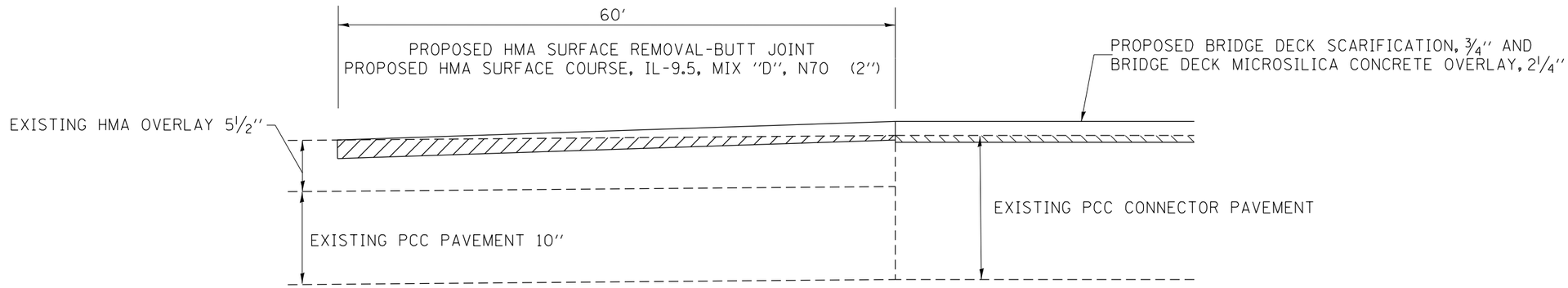

TYPICAL PAVEMENT TRANSITION AT STRUCTURES

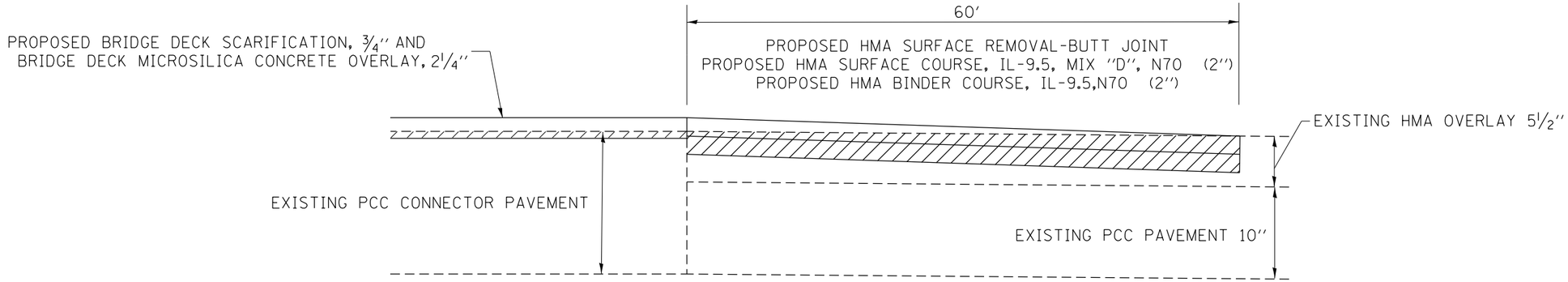

PAVEMENT TRANSITION EB I–74 OUTSIDE LANE STA. 906 + 09.15 TO STA. 906 + 69.15

NOTE: THE 2" LIFT OF HMA BINDER IS TO BE PAVED ON THE OUTSIDE LANE ONLY. THE INSIDE LANE AND SHOULDERS SHALL BE MILLED AND PAVED IN ACCORDANCE WITH THE TYPICAL PAVEMENT TRANSITION DETAIL.

* Type B, C, or D inlet box as required.

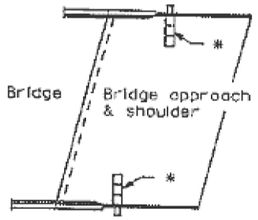

GENERAL PLAN

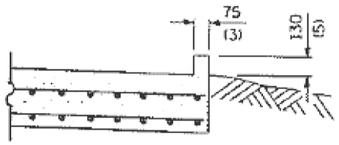

SECTION C-C

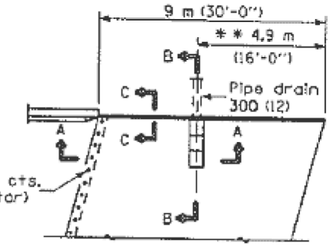

** Vary this dimension as needed to position the Inlet Box and Pipe Drain between the proposed approach guardrail posts.

TYPICAL DETAIL PLAN

(W/O Wingwall)

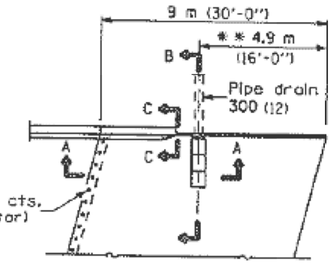

TYPICAL DETAIL PLAN

(With Wingwall)

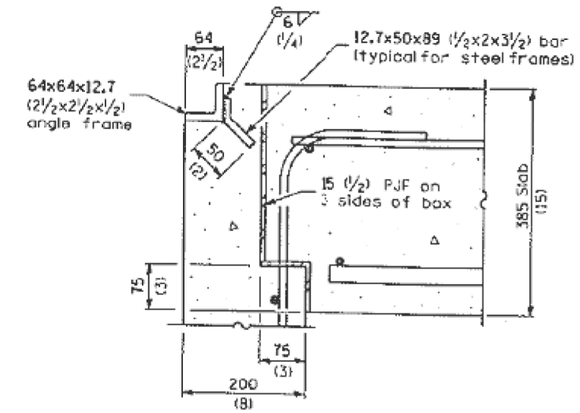

DETAIL A

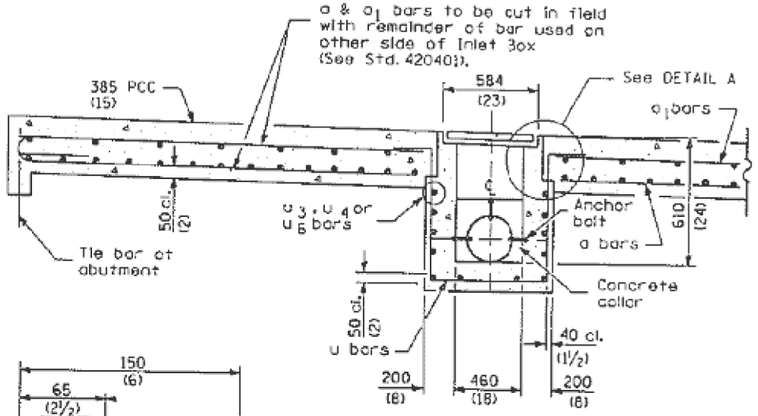

SECTION A-A

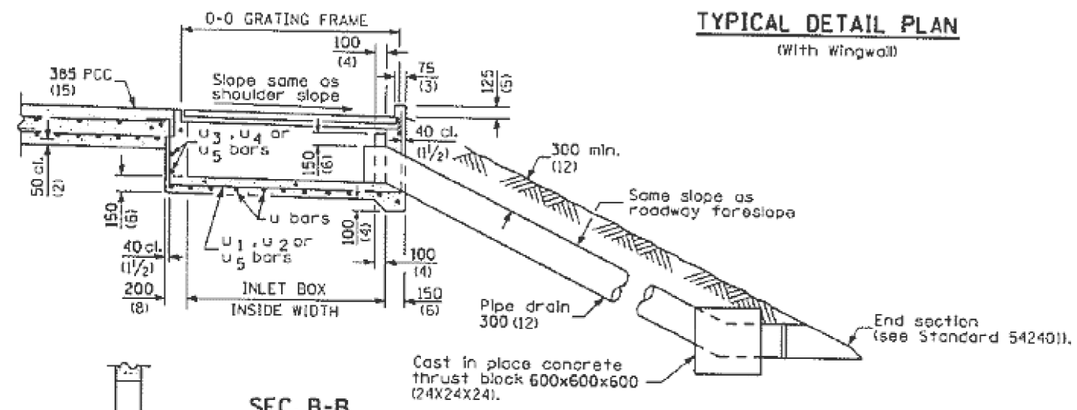

SEC. B-B

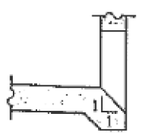

BOX OUTLET WHEN PRECAST

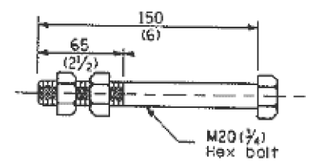

ANCHOR BOLT

(Used to tie pipe to concrete collar)

INLET TYPE	SHOULDER WIDTH	O-O GRATING FRAME	INLET BOX INSIDE WIDTH	INLET BOX INSIDE LENGTH
Type B	Less than 1.5 m (5')	0.690 m (2'-3")	0.560 m (1'-10")	460 (18)
Type C	1.5 - 1.8 m (5') (6')	1.325 m (4'-4")	1.195 m (3'-11")	460 (18)
Type D	Greater than 1.8 m (6')	1.960 m (6'-5")	1.830 m (6'-0")	460 (18)

GENERAL NOTES

All exposed edges of the inlet, except the upper perimeter, shall be beveled 20 mm (¾ inch).

All dimensions are in millimeters (inches) unless otherwise shown.

Illinois Department of Transportation

PASSED January 1, 2002
ENGINEER OF POLICY AND PROCEDURES
APPROVED January 1, 2002
ENGINEER OF DESIGN AND ENVIRONMENT

1-1-02 03/05/97

DATE	REVISIONS
1-1-02	Deleted "Metal" from Section B-B.
1-1-98	Rev. ref. to "542101" to read "542401".

BRIDGE APPROACH PAVEMENT (DRAIN DETAIL)

(Sheet 1 of 2)

STANDARD 609006-02

FOR INFORMATION ONLY

MODEL: Default
FILE NAME: O:\PDGEN\WINWORD\STD&PL\NS\Squad031-74 JR Morton Ave to Woodford Co\Drawings\CADsheets\68F54\68F54 Cover Sheets MS.dgn

USER NAME = horstkj	DESIGNED -	REVISED -	
	DRAWN -	REVISED -	
PLOT SCALE = 100.0000 ' / in.	CHECKED -	REVISED -	
PLOT DATE = 10/29/2020	DATE -	REVISED -	

STATE OF ILLINOIS
DEPARTMENT OF TRANSPORTATION

EXISTING BRIDGE APPROACH PAVEMENT DRAIN DETAIL
(FOR INFORMATION ONLY)

SCALE: | SHEET 43 OF 192 SHEETS | STA. | TO STA.

F.A.I. RTE.	SECTION	COUNTY	TOTAL SHEETS	SHEET NO.
74	90-15(HB(1-4);VB;B)BP,BJR,BRR	TAZEWELL	192	43

CONTRACT NO. 68F54

ILLINOIS

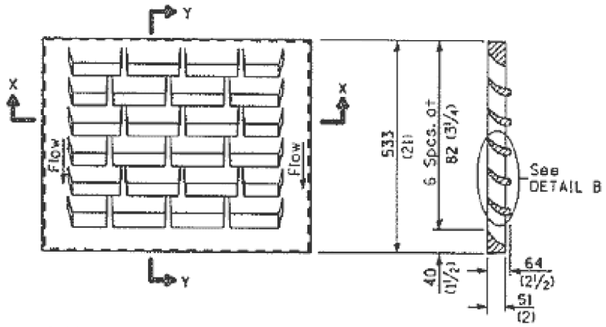

DETAIL OF CAST GRATE

Type B requires 1 grate
Type C requires 2 grates
Type D requires 3 grates

SECTION Y-Y

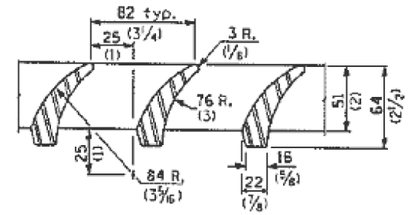

DETAIL B

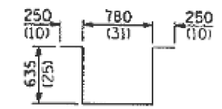

BAR u

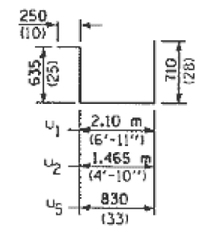

BARS u_1, u_2 & u_5

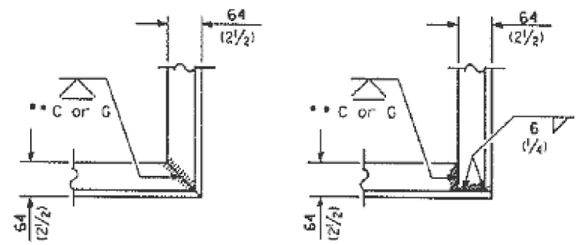

ALT. 1 ALT. 2

TYPICAL CORNER of STEEL GRATING FRAME

**Cut or Grind flush

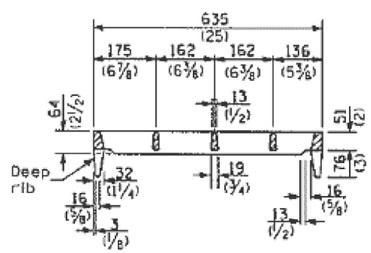

SECTION X-X

(Deep rib shall be omitted for end(s) resting on frame perimeter)

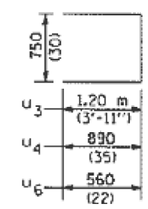

Bars u_3, u_4 & u_6

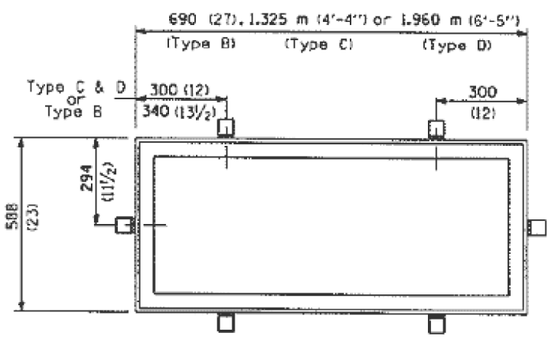

DETAIL OF STEEL FRAME

Cast frame to have same basic dimensions.

INLET BOX

REQUIRED MATERIAL

TYPE B

Bar	Qty.	Size	Length
u	4	No. 15 (No.4)	2.550 m (8'-5")
u_5	3	No. 15 (No.4)	2.425 m (8'-0")
u_6	4	No. 15 (No.4)	1.870 m (6'-2")
Concrete		m3 (cu. yds.)	0.4 (0.5)
Reinf. bars		kg (lbs.)	39.2 (55.0)
Grating		m2 (sq. ft.)	0.34 (3.6)

TYPE C

Bar	Qty.	Size	Length
u	6	No. 15 (No.4)	2.550 m (8'-5")
u_2	3	No. 15 (No.4)	3.060 m (10'-1")
u_4	4	No. 15 (No.4)	2.530 m (8'-4")
Concrete		m3 (cu. yds.)	0.6 (0.8)
Reinf. bars		kg (lbs.)	54.3 (76)
Grating		m2 (sq. ft.)	0.68 (7.3)

TYPE D

Bar	Qty.	Size	Length
u	8	No. 15 (No.4)	2.550 m (8'-5")
u_1	3	No. 15 (No.4)	3.695 m (12'-2")
u_3	4	No. 15 (No.4)	3.150 m (10'-4")
Concrete		m3 (cu. yds.)	0.8 (1.1)
Reinf. bars		kg (lbs.)	69.2 (97.0)
Grating		m2 (sq. ft.)	1.02 (10.9)

All dimensions are in millimeters (inches) unless otherwise shown.

Illinois Department of Transportation

PASSED January 1, 2002
ENGINEER OF POLICY AND PROCEDURES
APPROVED January 1, 2002
ENGINEER OF DESIGN AND ENVIRONMENT
ISSUED 1-1-97

BRIDGE APPROACH PAVEMENT (DRAIN DETAIL)

(Sheet 2 of 2)

STANDARD 609006-02

FOR INFORMATION ONLY

MODEL: Default
FILE NAME: O:\PDGEN\WINWORD\STD&PL\NS\Squad03\1-74 3R Morton Ave to Woodford Co\Drawings\CADsheets\68F54\68F54 Cover Sheets KS.dgn

USER NAME = horstkj	DESIGNED -	REVISED -	
	DRAWN -	REVISED -	
PLOT SCALE = 100.0000 ' / in.	CHECKED -	REVISED -	
PLOT DATE = 10/29/2020	DATE -	REVISED -	

STATE OF ILLINOIS
DEPARTMENT OF TRANSPORTATION

EXISTING BRIDGE APPROACH PAVEMENT DRAIN DETAIL
(FOR INFORMATION ONLY)

SCALE: SHEET 44 OF 192 SHEETS STA. TO STA.

F.A.I. RTE.	SECTION	COUNTY	TOTAL SHEETS	SHEET NO.
74	90-15(HB(1-4);VB;B)BP,BJR,BRR	TAZEWELL	192	44
		CONTRACT NO. 68F54		
		ILLINOIS		

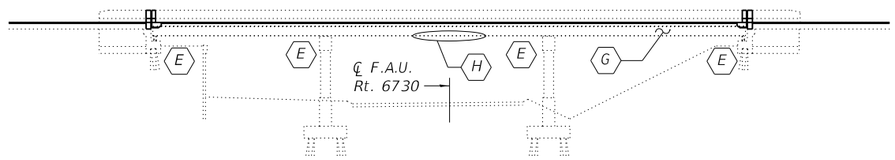

ELEVATION

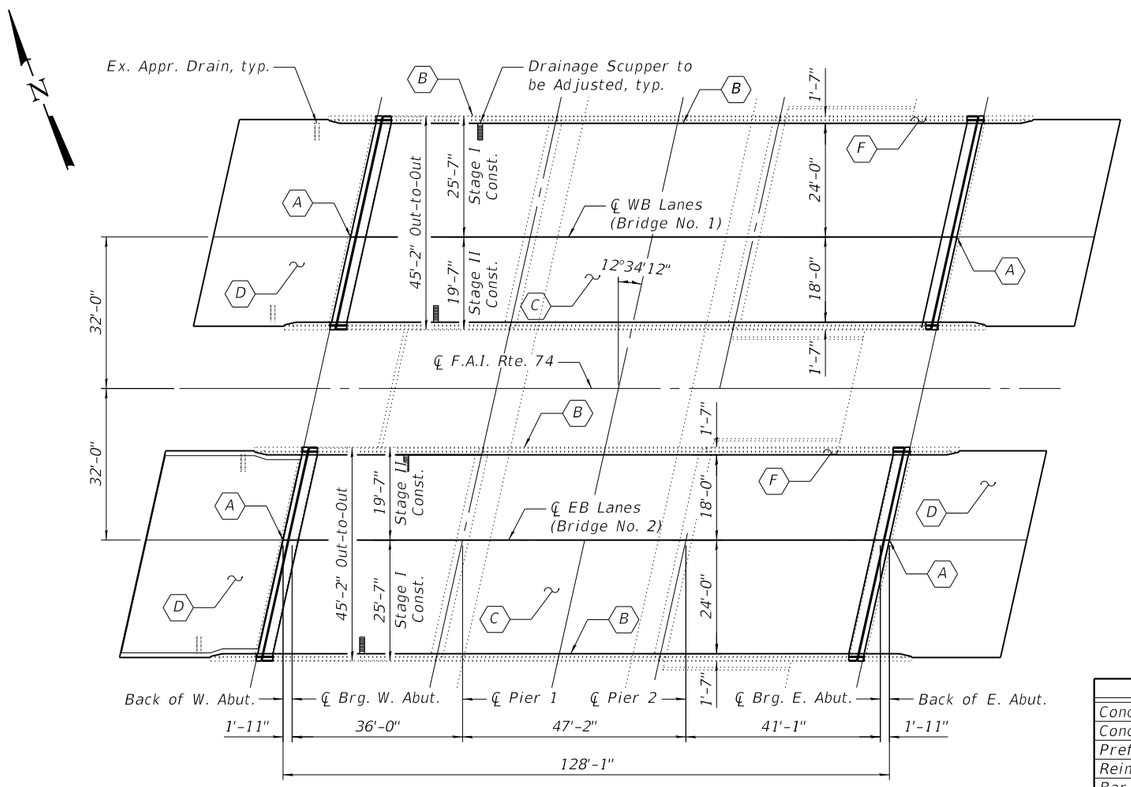

PLAN

- (A) – Remove and replace expansion joints at abutments
- (B) – Bridge deck or parapet repair (Depth ≤ 5")
- (C) – ¾" Bridge Deck Scarification, 2¼" Microsilica Concrete Overlay to bridge deck, approach slab, and transition pavement & Adjust Drainage Scuppers
- (D) – Repair bridge approach and transition approach slabs (See Roadway Plans for details)
- (E) – Concrete repair of abutments or piers
- (F) – Apply Protective Coat (Special) to the inside face and top of parapets
- (G) – Clean and paint all structural steel and bearings
- (H) – Beam straightening and strengthening (EB Beams 1 and 3, Span 2)

INDEX OF SHEETS

TOTAL BILL OF MATERIAL

ITEM	UNIT	SUPER	SUB	TOTAL
Concrete Removal	Cu. Yd.	25.0		25.0
Concrete Superstructure	Cu. Yd.	27.7		27.7
Preformed Joint Strip Seal	Foot	181		181
Reinforcement Bars, Epoxy Coated	Pound	3000		3000
Bar Splicers	Each	48		48
Protective Coat	Sq. Yd.	1748		1748
Bridge Deck Grooving	Sq. Yd.	1656		1656
Structural Steel Repair	Pound	710		710
Structural Repair of Concrete (Depth ≤ 5")	Sq. Ft.	77.0	175.5	252.5
Bridge Deck Scarification, ¾"	Sq. Yd.	1957		1957
Bridge Deck Microsilica Concrete Overlay, 2¼"	Sq. Yd.	1957		1957
Containment and Disposal of Lead Paint Cleaning Residues No. 1	L. Sum	1		1
Containment and Disposal of Lead Paint Cleaning Residues No. 2	L. Sum	1		1
Cleaning and Painting Steel Bridge No. 1	L. Sum	1		1
Cleaning and Painting Steel Bridge No. 2	L. Sum	1		1
Protective Coat (Special)	Sq. Yd.	415		415
Surface Filler (Special)	Gallon	6		6
Drainage Scuppers to be Adjusted	Each	4		4
Beam Straightening	L. Sum	1		1

GENERAL NOTES

All structural steel shall conform to AASHTO Classification M-270 Gr. 36, unless otherwise noted.

Fasteners shall be high strength bolts. Bolts ⅞"Ø, open holes 15/16"Ø, unless otherwise noted.

Plan dimensions and details relative to existing plans are subject to nominal construction variations. The Contractor shall field verify existing dimensions and details affecting new construction and make necessary approved adjustments prior to construction or ordering of materials. Such variations shall not be cause for additional compensation for a change in scope of work, however, the Contractor will be paid for the quantity actually furnished at the unit price bid for the work.

Reinforcement bars designated (E) shall be epoxy coated.

Prior to pouring new concrete, all heavy or loose rust, loose mill scale, and other loose or potentially detrimental foreign material shall be removed from the surfaces in contact with concrete. Tightly adhered paint may remain unless otherwise noted. Removal shall be accomplished by methods that will not damage the steel and the cost will be included in the pay item covering removal of existing concrete.

Existing reinforcement bars extending into the removal area shall be cleaned, straightened, and incorporated into the new construction. Any reinforcement bars that are damaged during concrete removal shall be replaced with an approved bar splicer or anchorage system. Cost included with Concrete Removal.

Joint openings shall be adjusted according to Article 520.04 of the Std. Specs. when the deck is poured at an ambient temperature other than 50° F.

The existing structural steel coating contains lead. The Contractor shall take appropriate precautions to deal with the presence of lead on this project.

Cleaning and painting of the existing structural steel shall be as specified in the special provision for "Cleaning and Painting Existing Steel Structures". All beams, bearings, and other structural steel shall be cleaned per Near White Blast Cleaning (SSPC-SP10). The exterior surfaces and bottom of the bottom flange of the fascia beams shall be cleaned per Commercial Grade Power Tool Cleaning (SSPC-SP15).

The designated areas cleaned per Near White Blast Cleaning (SSPC-SP10) and per Commercial Grade Power Tool Cleaning (SSPC-SP15) shall be painted according to the requirements of paint system 1 – OZ/E/U. The color of the final finish coat for all interior steel surfaces shall be Gray (Munsell No. 5B 7/1). The color of the final finish coat for the exterior and bottom flange of the fascia beams shall be Blue (Munsell No. 10B 3/6).

A minimum of 4 air monitors will be required to monitor abrasive blasting operations at this site. See special provision for "Containment and Disposal of Lead Paint Cleaning Residues".

SSPC QP1 and SSPC QP2 Certification is required for this Contract.

Care shall be taken not to damage rubber bearing or joint components during blasting and cleaning operations. Any damage to these components shall be repaired at the contractor's expense.

Existing structural steel that will be in contact with new structural steel shall be cleaned and painted prior to erection as required by the Special Provision "Cleaning and Painting Contact Surface Areas of Existing Steel Structures".

The Inorganic Zinc Rich Primer / Acrylic / Acrylic Paint System shall be used for shop and field painting of new structural steel except where otherwise noted. The color of the final finish coat for all interior steel surfaces shall be Gray, Munsell No. 5B 7/1. The color of the final finish coat for the exterior and bottom flange of the fascia beams shall be Blue, Munsell No. 10B 3/6. Cost included with Structural Steel Repair.

Load carrying components designated "NTR" shall conform to the Supplemental Requirements for Notch Toughness, Zone 2.

MODEL: Default
FILE NAME: P:\2019\190388\W06 I-74 Bridge PSEs\4 CADD - DWG\4.4 Struc\090019-0020\090019-0020-68F54-001_General Plan and Elevation.dgn

TWM ENGINEERING & GEOSPATIAL SERVICES	TWM, INC. WWW.TWM-INC.COM IL DESIGN FIRM LICENSE NO: 184-001220	USER NAME = mjoost	DESIGNED - CDK	REVISED -	STATE OF ILLINOIS DEPARTMENT OF TRANSPORTATION
			CHECKED - ALN	REVISED -	
		PLOT SCALE = 0:2.0000 ':" / in.	DRAWN - CDK	REVISED -	
		PLOT DATE = 12/1/2020	CHECKED - ALN	REVISED -	

GENERAL PLAN & ELEVATION
SN 090–0019 & SN090–0020

SHEET 1 OF 37 SHEETS

F.A.I. RTE.	SECTION	COUNTY	TOTAL SHEETS	SHEET NO.
74	90-15[HB(1-4);VB;B]BP,BJR,BRR	TAZEWELL	192	45
		CONTRACT NO. 68F54		
	ILLINOIS	FED. AID PROJECT		

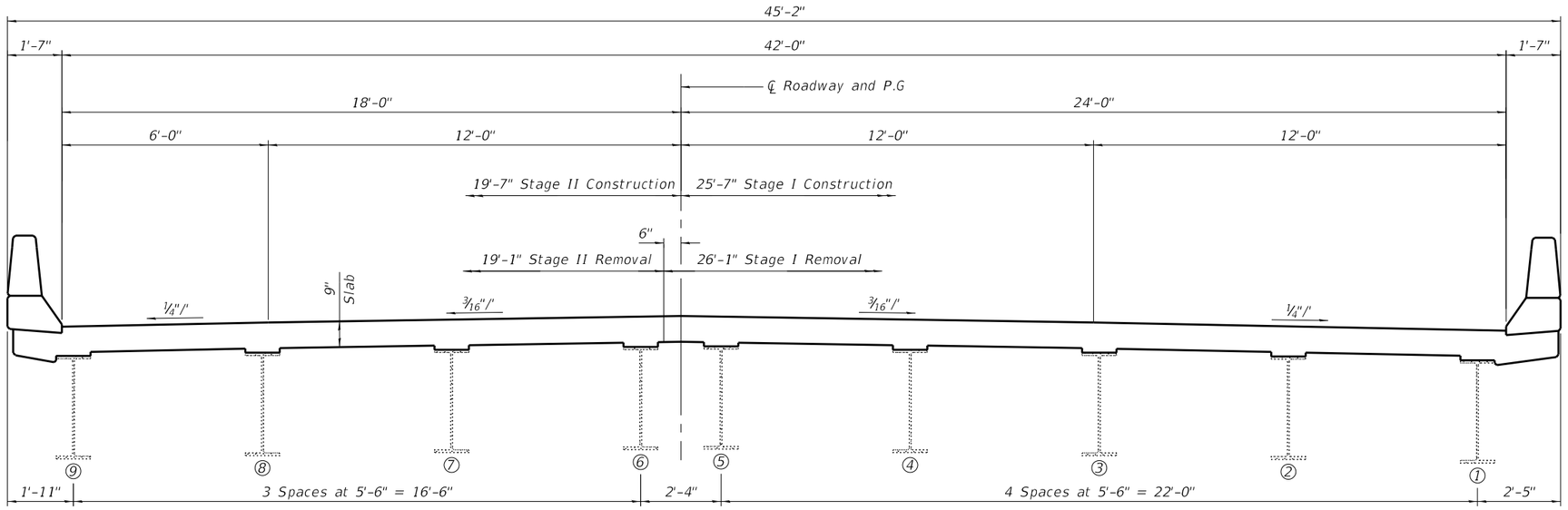

CROSS SECTION AT ABUTMENT

(Looking East - E. Bound Lanes S.N. 090-0019)
(Looking West - W. Bound Lanes S.N. 090-0020)

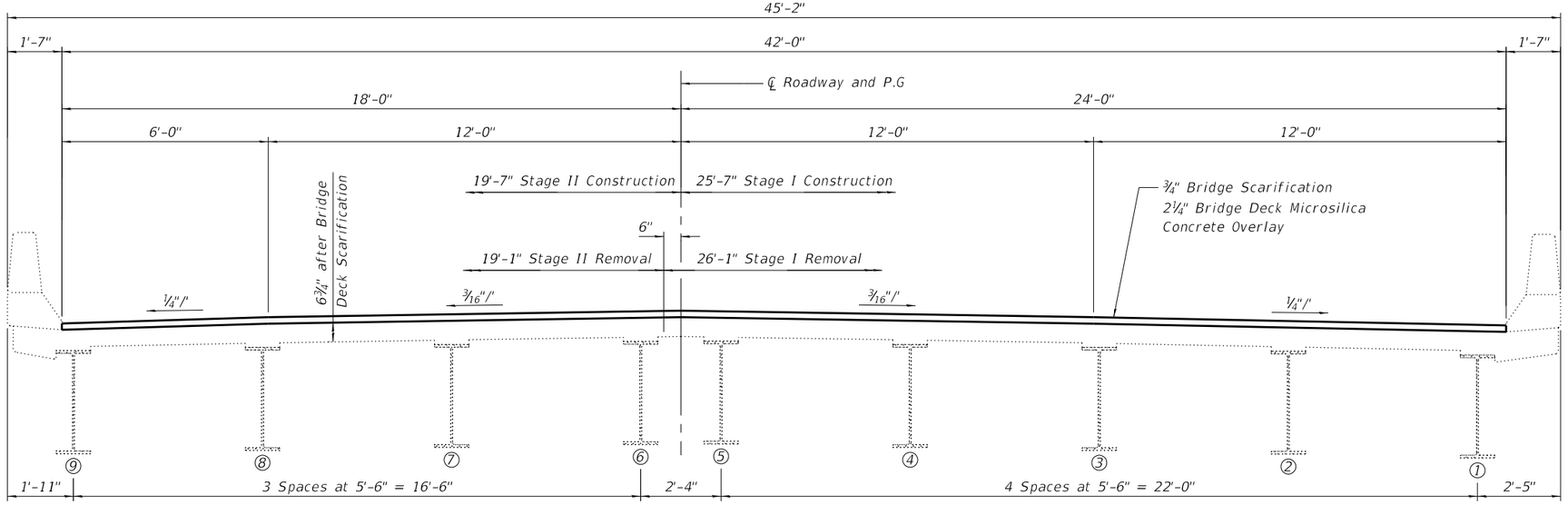

CROSS SECTION AT MIDSPAN

(Looking East - E. Bound Lanes S.N. 090-0019)
(Looking West - W. Bound Lanes S.N. 090-0020)

MODEL: Default
FILE NAME: P:\2019\190388\W06 F-74 Bridge PSE\v4 CADD - DWG\4.4 Struc\09900019-0020\0900019-0020-68F54-002 typical Section 0019 & 0020.dgn

TWM ENGINEERING GEOSPATIAL SERVICES	TWM, INC. WWW.TWM-INC.COM IL DESIGN FIRM LICENSE NO: 184-001220	USER NAME = mjoost	DESIGNED - DRA	REVISED -	STATE OF ILLINOIS DEPARTMENT OF TRANSPORTATION	BRIDGE CROSS SECTIONS SN. 090-0019 AND SN. 090-0020	F.A.I. RTE.	SECTION	COUNTY	TOTAL SHEETS	SHEET NO.
			CHECKED - CDK	REVISED -			74	90-15(HB(1-4);VB:B]BP,BJR,BRR	TAZEWELL	192	46
		PLOT SCALE = 0:2.0000 ':" / in.	DRAWN - DRA	REVISED -					CONTRACT NO. 68F54		
		PLOT DATE = 12/1/2020	CHECKED - CDK	REVISED -		SHEET 2 OF 37 SHEETS		ILLINOIS	FED. AID PROJECT		

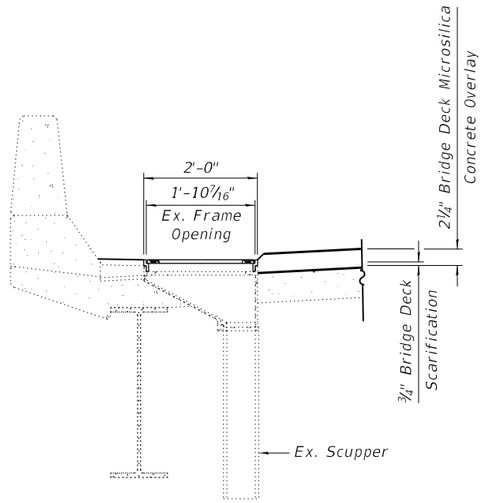

TYPICAL DS-12 SCUPPER DETAIL

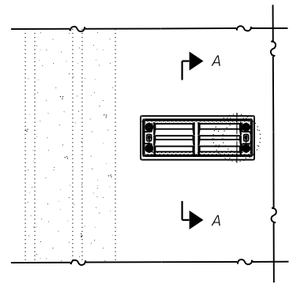

PLAN

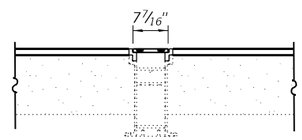

SECTION A-A

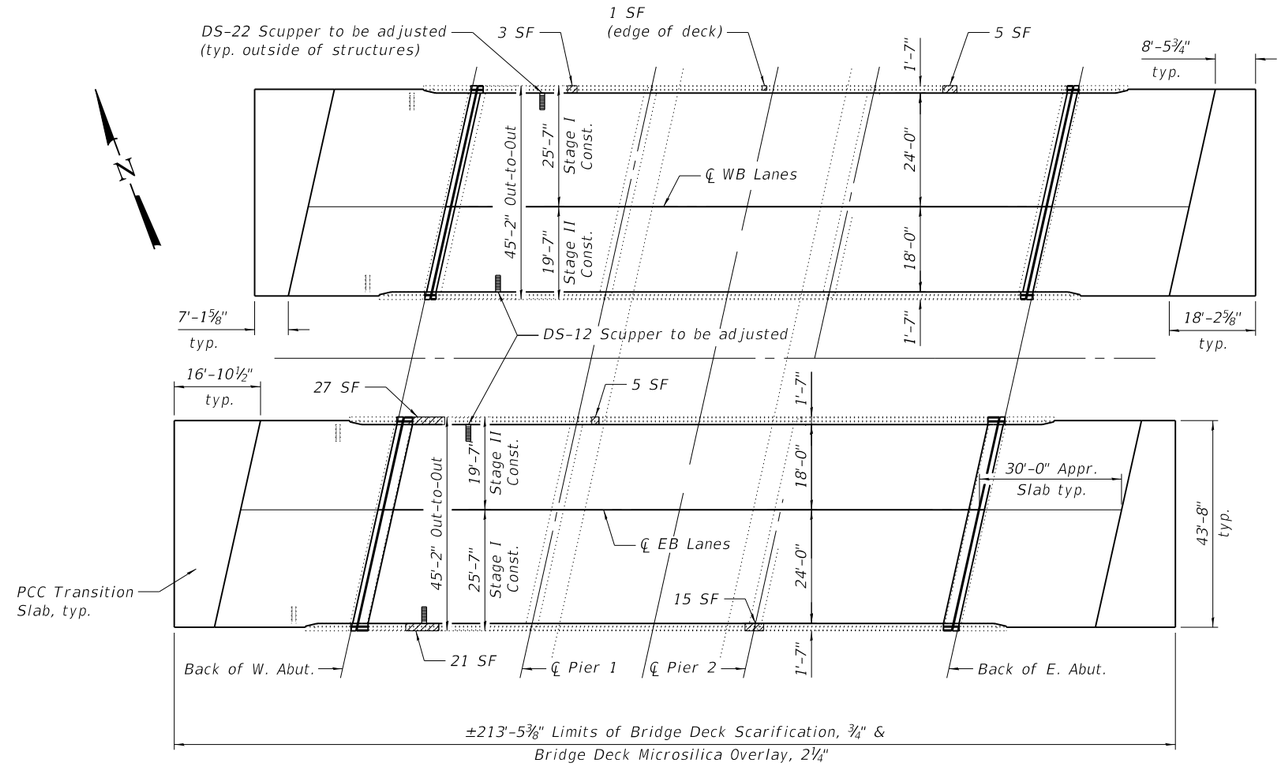

PLAN

▨ - Structural Repair of Concrete (Depth ≤ or Equal to 5")

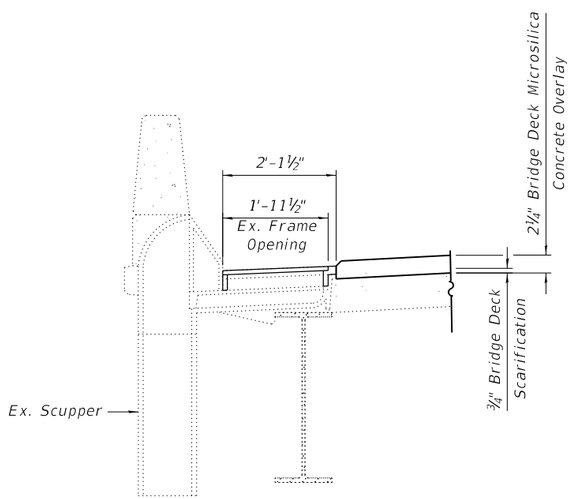

TYPICAL DS-22 SCUPPER DETAIL

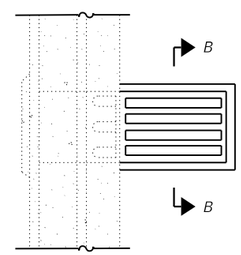

PLAN

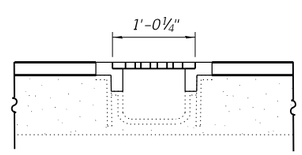

SECTION B-B

Notes:

1. The Contractor shall field verify existing dimensions and details of the existing scupper to make necessary adjustments prior to construction of new Adjusting Ring or ordering of material for adjusting drainage scuppers
2. All cast iron parts shall be Grey Iron conforming to the requirements of AASHTO M 105, Class 35B.
3. Bolts, anchor studs, washers, and nuts shall conform to the requirements of ASTM A 307 and shall be galvanized according to the requirements of AASHTO M 232.
4. Cast iron parts shall be unfinished.
5. Adjusting Ring shall be from Neenah or approved equal. Structural Steel weldments or equivalent sections of the same configuration may be submitted for cast iron. Fillet or full penetration welds may be used for weldments. Details shall be submitted to the Engineer for approval.
6. Provide a ⅛" fillet weld around perimeter of new Adjusting Ring to secure to existing scupper. Electrode shall be compatible with cast iron.
7. Cost of all labor and materials necessary to clean all existing scuppers, to install adjusting scupper rings, and to remove and re-install grates is included in the cost for Drainage Scuppers to be Adjusted.

BILL OF MATERIAL

	Item	Unit	Quantity
	Bridge Deck Grooving	Sq. Yd.	1656
	Structural Repair of Concrete (Depth ≤ or Equal to 5")	Sq. Ft.	77
*	Protective Coat	Sq. Yd.	1748
**	Protective Coat (Special)	Sq. Yd.	415
	Surface Filler (Special)	Gallon	6
	Bridge Deck Microsilica Concrete Overlay, 2¼"	Sq. Yd.	1957
	Bridge Deck Scarification, ¾"	Sq. Yd.	1957
	Drainage Scuppers to be Adjusted	Each	4

* Apply to new concrete and overlay only. (Bridge & Appr. Slab)

** Apply to existing parapets only. (Bridge & Appr. Slab)

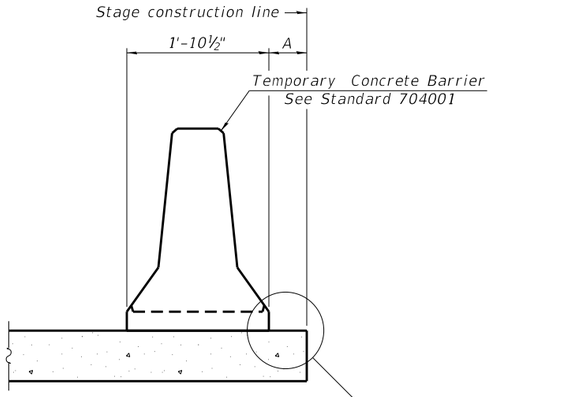

When "A" is 3'-1" or less, the temporary concrete barrier shall be restrained to the new slab according to Detail I, II or III. No restraint is required when "A" is greater than 3'-1".

NEW SLAB OR NEW DECK BEAM

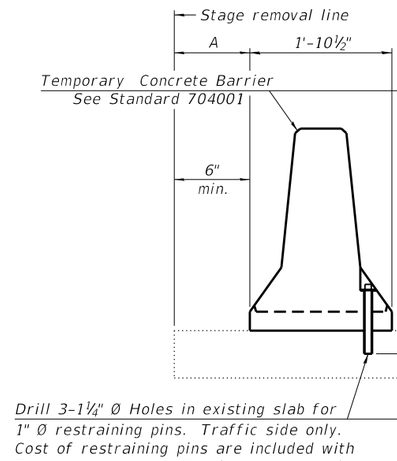

Drill 3-1¼" Ø Holes in existing slab for 1" Ø restraining pins. Traffic side only. Cost of restraining pins are included with Temporary Concrete Barrier. No restraint is required when "A" is greater than 3'-1".

EXISTING SLAB

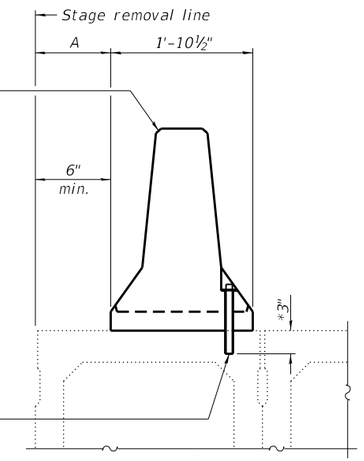

* When hot-mix asphalt wearng surface is present, embedment shall be 3" plus the wearing surface depth.

EXISTING DECK BEAM

SECTIONS THRU SLAB OR DECK BEAM

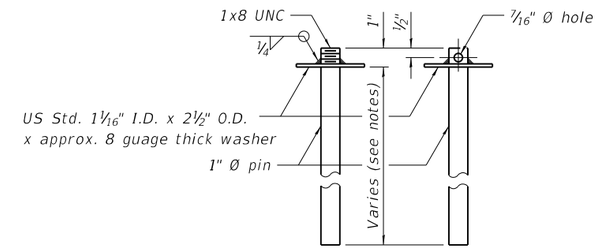

RESTRAINING PIN

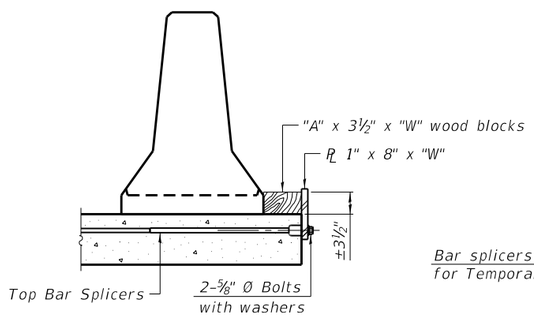

DETAIL I

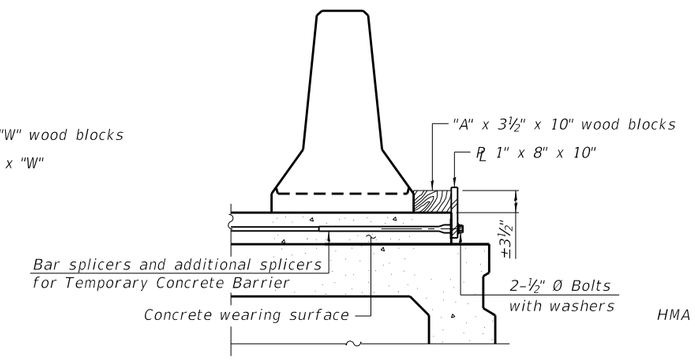

DETAIL II

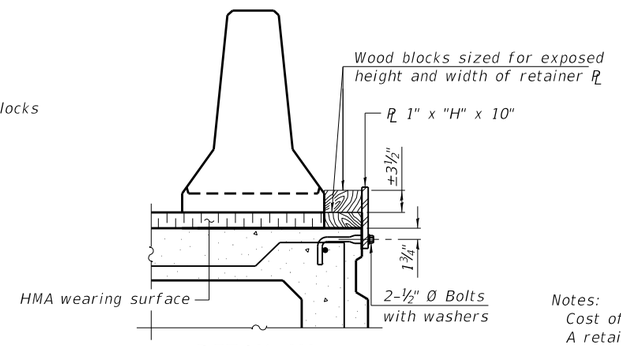

DETAIL III

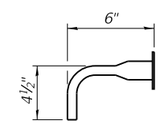

BAR SPLICER FOR #4 BAR - DETAIL III

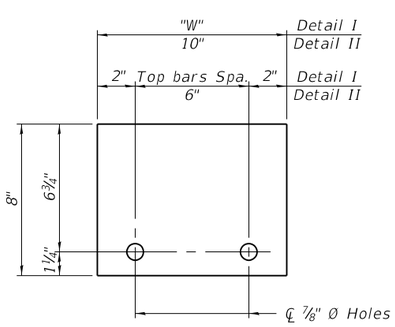

STEEL RETAINER PL 1" x 8" x "W"

(Detail I and II)

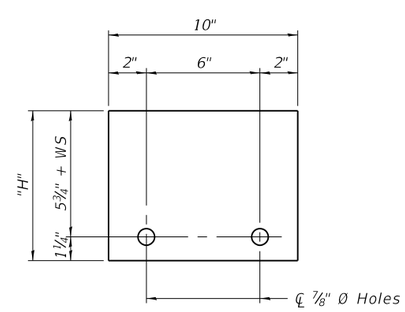

STEEL RETAINER PL 1" x "H" x 10"

(Detail III)

Notes:

Cost of retainer assembly is included with Temporary Concrete Barrier.

A retainer assembly shall be located at the approximate ℄ of each temporary concrete barrier.

The retainer plate shall not be removed until the concrete on the adjacent stage is ready to be poured. For Detail III applications the retainer plate shall not be removed until just prior to placing the adjacent beam.

When the 'A' dimension is less than 1½", the wood block shall be omitted and the barrier shall be placed in direct contact with the steel retainer plate. For deck beam applications the minimum required 'A' distance is 6" to accommodate the shear key clamping device.

Detail I - Installation for a new bridge deck or bridge slab.

Detail II - Installation for a new deck beam with an initial concrete wearing surface. Additional bar splicers shall be provided at 6'-0" centers and paired with the bar splicers of the concrete wearing surface reinforcement to accommodate the installation of the retainer assemblies. The cost of the additional bar splicers is included with the concrete wearing surface.

Detail III - Installation for a new deck beam with no initial wearing surface or with an initial hot-mix asphalt (HMA) wearing surface present. The deck beam directly beneath the temporary concrete barrier shall be fabricated with bar splicer inserts in the side of the beam, as detailed, to accommodate the installation of the retainer assemblies. A pair of bar splicers, 6" apart, shall be placed at 6'-0" centers along the length of the beam. The cost of the bar splicers is included with the deck beam.

See Roadway Plans for quantity.

R-27

2-17-2017

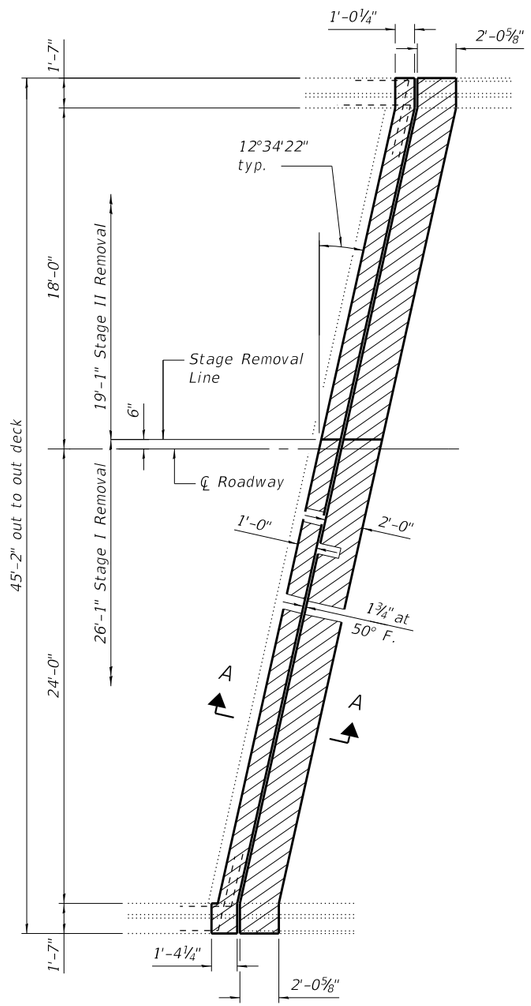

PLAN

CONCRETE REMOVAL AT W. ABUT.

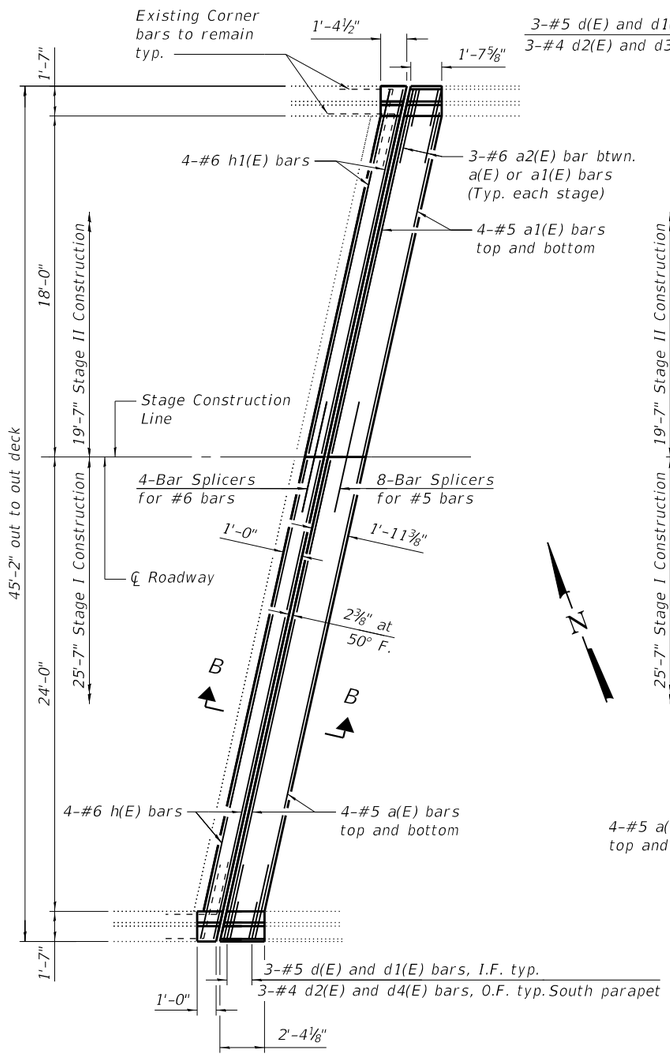

PLAN

CONCRETE REPLACEMENT AT W. ABUT.

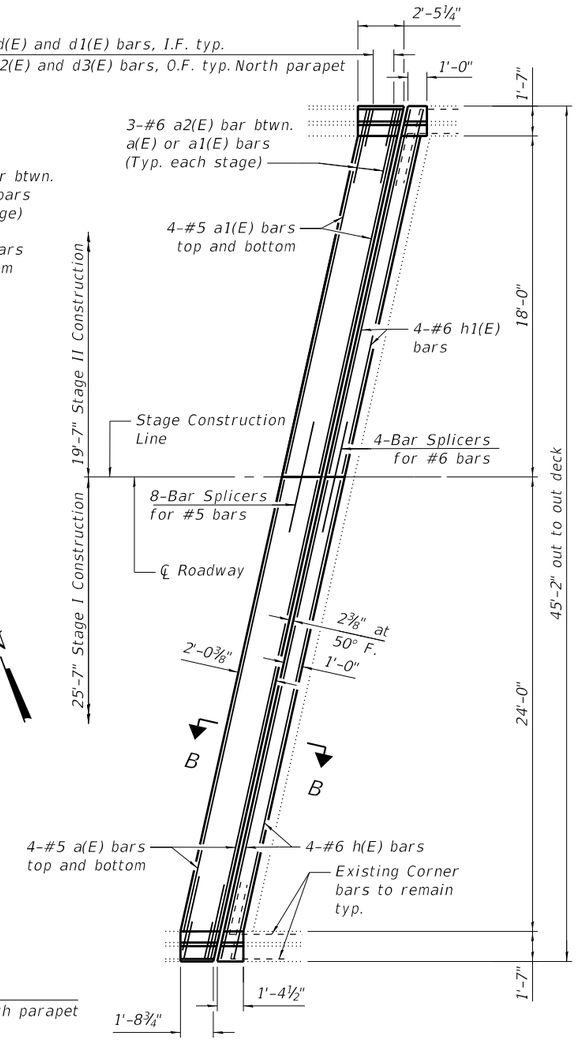

PLAN

CONCRETE REPLACEMENT AT E. ABUT.

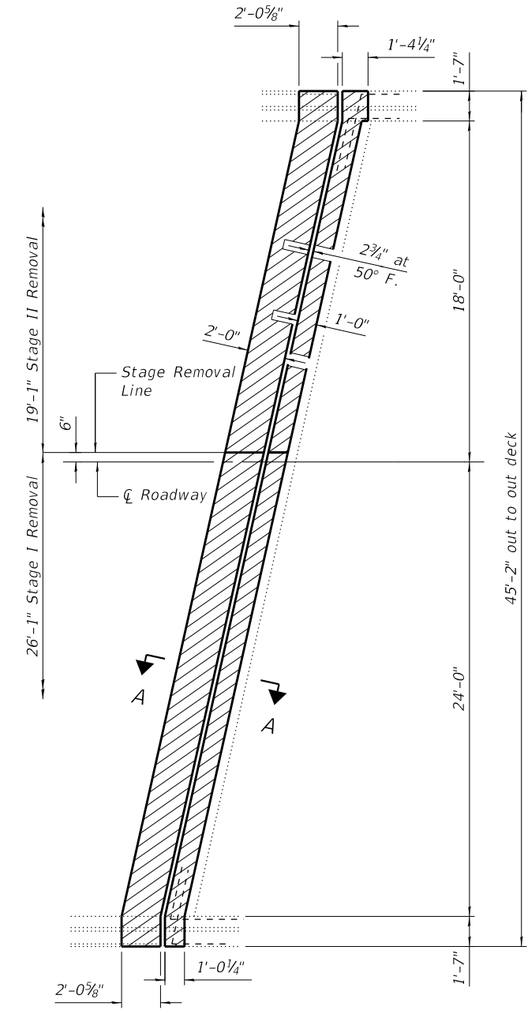

PLAN

CONCRETE REMOVAL AT E. ABUT.

Notes:
Hatched areas indicate Concrete Removal.
For Section views, see Sheet 7 of 37.
Dimensions are based on a Rolled Rail Strip Seal joint. If the contractor elects to use the Welded Rail Strip Seal Joint, deck dimensions may require adjustments to satisy the details on Base Sheet EJ-SS.

MODEL: Default
FILE NAME: P:\2019\190388\W06 I-74 Bridge PSEs\4 CADD - DWG\4.4 Struc\0900019-0020\0900019-0020-68F54-005_Jdlr: Repair Detail Plan 0019.dgn

TWM ENGINEERING GEOSPATIAL SERVICES
TWM, INC.
WWW.TWM-INC.COM
IL DESIGN FIRM LICENSE NO: 184-001220

USER NAME = mjoost	DESIGNED - DRA	REVISED -	
	CHECKED - CDK	REVISED -	
PLOT SCALE = 0:2.0000 ':" / in.	DRAWN - DRA	REVISED -	
PLOT DATE = 12/1/2020	CHECKED - CDK	REVISED -	

STATE OF ILLINOIS
DEPARTMENT OF TRANSPORTATION

JOINT REPLACEMENT PLAN
SN. 090-0019

SHEET 5 OF 37 SHEETS

F.A.I. RTE.	SECTION	COUNTY	TOTAL SHEETS	SHEET NO.
74	90-15(HB(1-4);VB;B]BP,BJR,BRR	TAZEWELL	192	49
		CONTRACT NO. 68F54		
	ILLINOIS	FED. AID PROJECT		

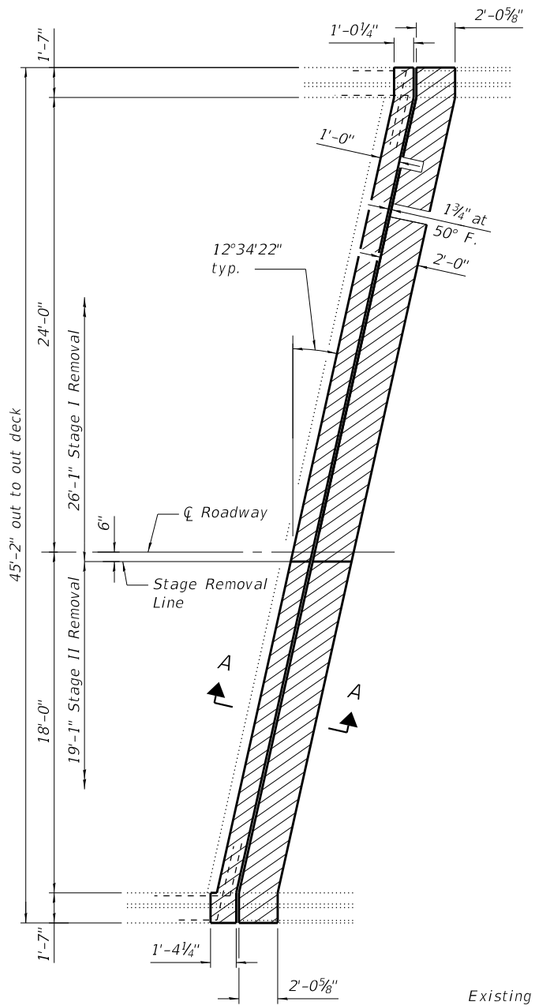

PLAN

CONCRETE REMOVAL AT W. ABUT.

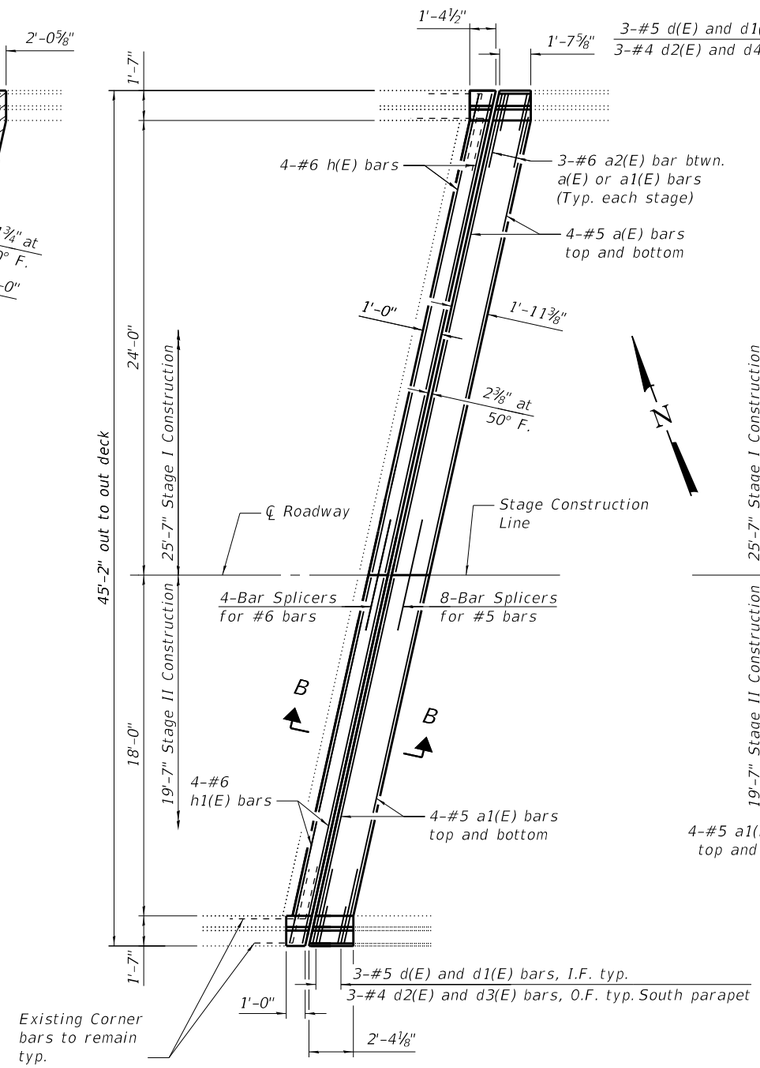

PLAN

CONCRETE REPLACEMENT AT W. ABUT.

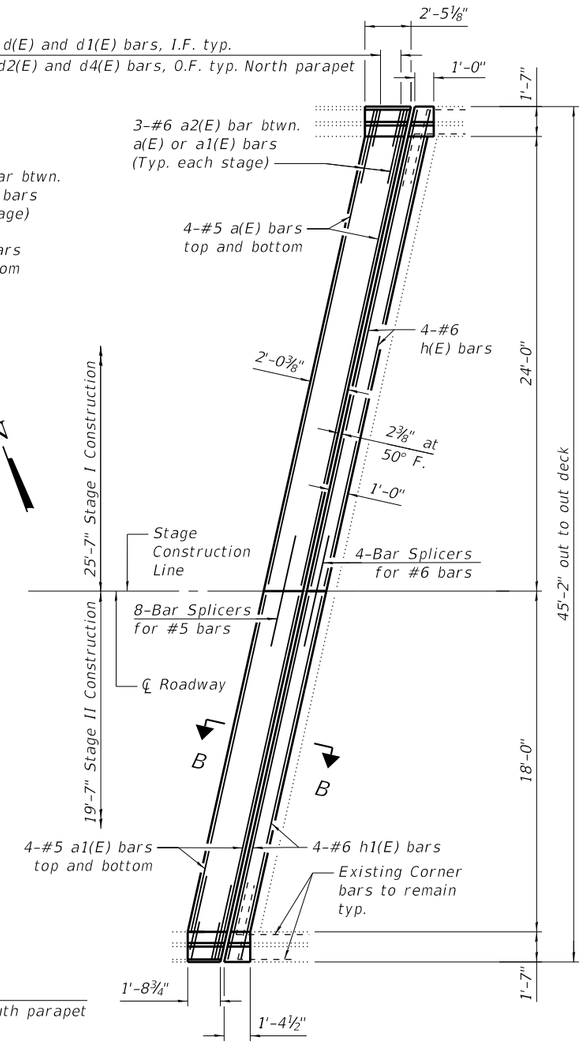

PLAN

CONCRETE REPLACEMENT AT E. ABUT.

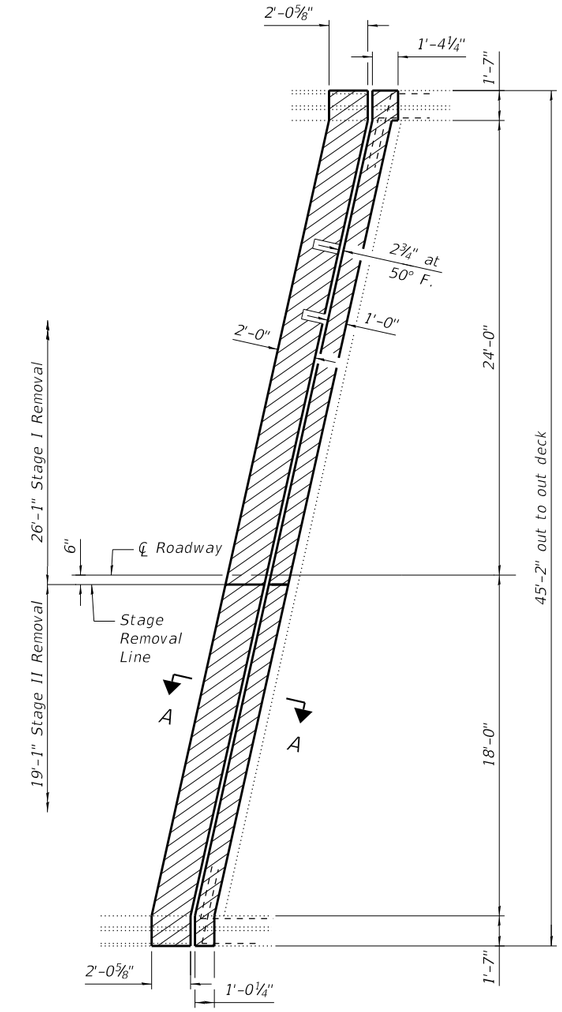

PLAN

CONCRETE REMOVAL AT E. ABUT.

Notes:
Hatched areas indicate Concrete Removal.
For Section views, see Sheet 7 of 37.
Dimensions are based on a Rolled Rail Strip Seal joint. If the contractor elects to use the Welded Rail Strip Seal Joint, deck dimensions may require adjustments to satisfy the details on Base Sheet EJ-SSJ.

MODEL: Default
FILE NAME: P:\2019\190388\W06 I-74 Bridge PSEs\4 CADD - DWG\4.4 Struc\090001 9-2020\090001 9-2020-68F54-006 Joint Repair Detail Plan 0020.dgn

TWM ENGINEERING & GEOSPATIAL SERVICES
TWM, INC.
WWW.TWM-INC.COM
IL DESIGN FIRM LICENSE NO: 184-001220

USER NAME = mjoost	DESIGNED - DRA	REVISED -	
	CHECKED - CDK	REVISED -	
PLOT SCALE = 0:2.0000 ':" / in.	DRAWN - DRA	REVISED -	
PLOT DATE = 12/1/2020	CHECKED - CDK	REVISED -	

STATE OF ILLINOIS
DEPARTMENT OF TRANSPORTATION

JOINT REPLACEMENT PLAN
SN. 090-0020

SHEET 6 OF 37 SHEETS

F.A.I. RTE.	SECTION	COUNTY	TOTAL SHEETS	SHEET NO.
74	90-15[HB(1-4);VB;B]BP,BJR,BRR	TAZEWELL	192	50

CONTRACT NO. 68F54

ILLINOIS | FED. AID PROJECT

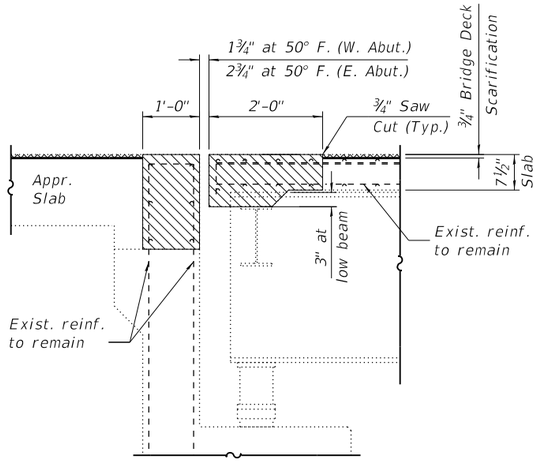

SECTION A-A
(Dims. at Rt. L's to end of deck)

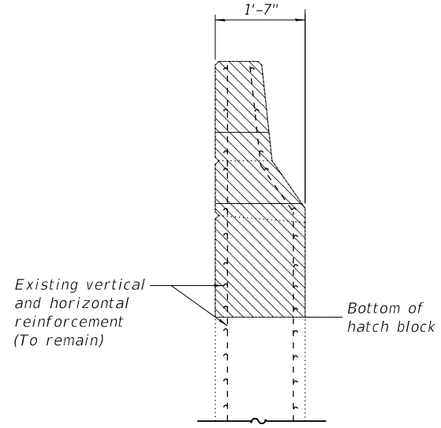

SECTION THRU WINGWALL
(Showing Removal)

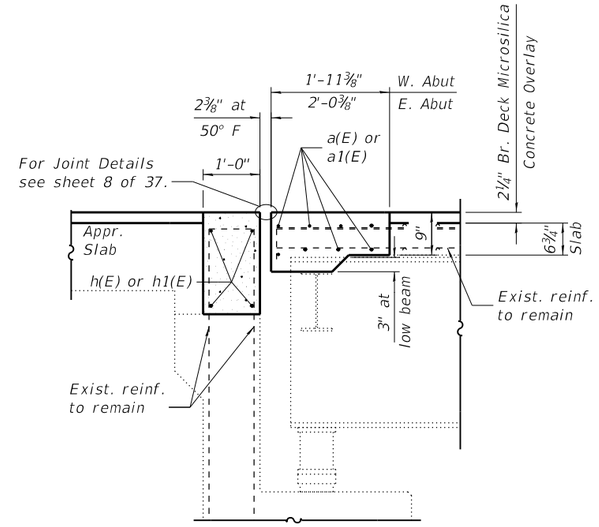

SECTION B-B
(Dims. at Rt. L's to end of deck)

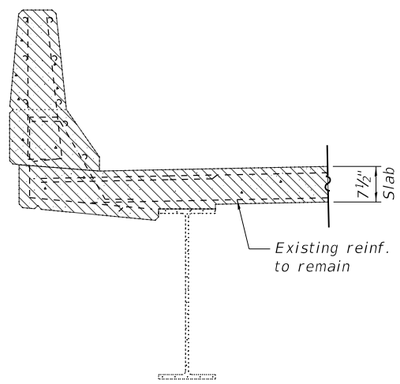

SECTION THRU PARAPET
(Showing Removal)

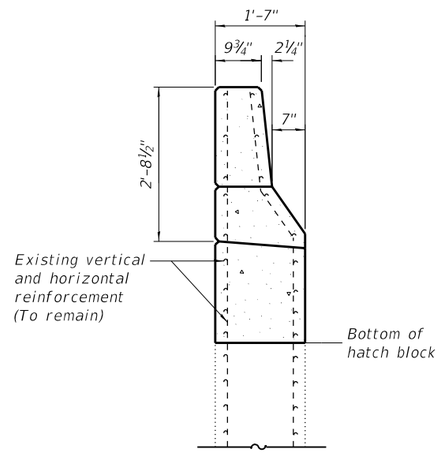

SECTION THRU WINGWALL
(Proposed)

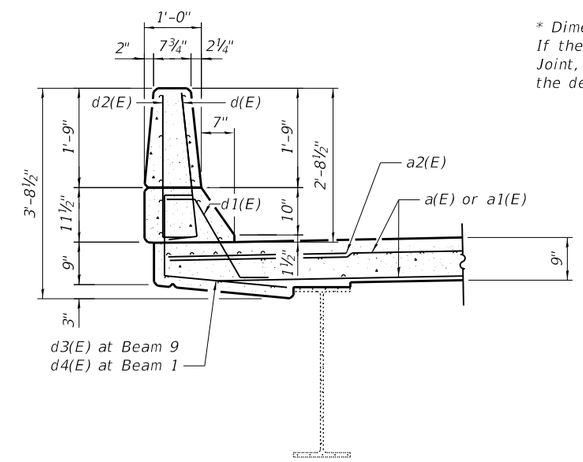

SECTION THRU PARAPET
(Proposed)

* Dimensions are based on a Rolled Rail Strip Seal Joint. If the Contractor elects to use the Welded Rail Strip Seal Joint, deck dimensions may require adjustments to satisfy the details on Sheet 8 of 37.

Notes:
Hatched areas indicate Concrete Removal.
Cross Hatched areas indicate Bridge Deck Scarification.

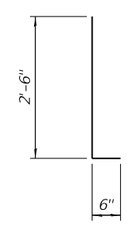

BARS d(E) & d2(E)

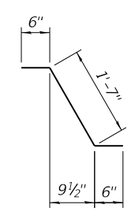

BAR d1(E)

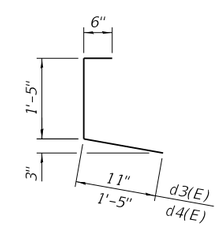

BAR d3(E) & d4(E)

TOTAL BILL OF MATERIAL

Bar	No.	Size	Length	Shape
a(E)	32	#5	25'-10"	
a1(E)	32	#5	19'-8"	
a2(E)	24	#6	4'-0"	
d(E)	24	#5	3'-0"	
d1(E)	24	#5	2'-7"	
d2(E)	24	#4	3'-0"	
d3(E)	12	#4	2'-10"	
d4(E)	12	#4	3'-4"	
h(E)	16	#6	25'-10"	
h1(E)	16	#6	19'-8"	
Concrete Removal			Cu. Yd.	25.0
Concrete Superstructure			Cu. Yd.	27.7
Reinforcement Bars, Epoxy Coated			Pound	3000

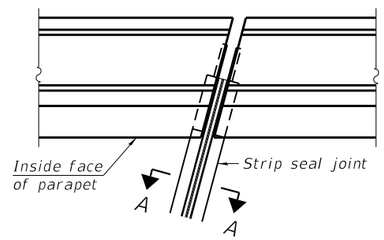

FOR SKEWS ≤ 30°

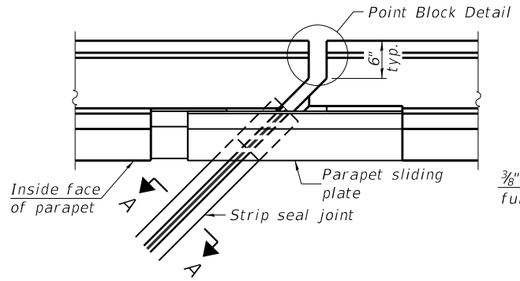

FOR SKEWS > 30°

PLAN AT PARAPET

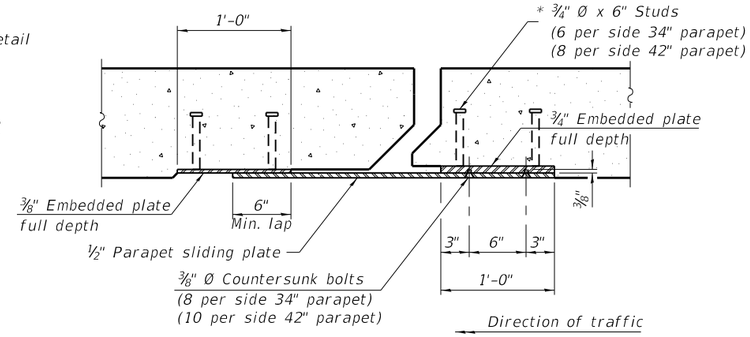

SECTION B-B

Notes:

The strip seal shall be made continuous and shall have a minimum thickness of ¼". The configuration of the strip seal shall match the configuration of the locking edge rails. Open or "webbed" strip seal gland configurations are not permitted. The gland shall be sized for a maximum rated movement of 4 inches.

The locking edge rails depicted are configured for typical applications and are conceptual only. The actual configuration of the locking edge rails and matching strip seal may vary from manufacturer to manufacturer provided they fit the application and meet the minimum anchorage shown. Flanged edge rails, however, will not be allowed. Locking edge rails may exceed the 4½" maximum depth provided the anchorage system is revised according to the manufacturer's recommendation.

The manufacturer's recommended installation methods shall be followed.

All steel components shall be galvanized after fabrication according to Article 520.03 of the Standard Specifications.

The Maximum space between locking edge rail segments shall be 3/16" and sealed with a suitable sealant; however, any rail joint within 10' measured perpendicular to the face of the curb or parapet shall be welded as shown in the locking edge rail splice detail.

Cost of parapet sliding plates, embedded plates, and anchorage studs included with Preformed Joint Strip Seal.

34" F-shape barrier shown, 42" F-shape similar as noted.

The concrete opening below the strip seal will vary based on the locking edge rail chosen by the Contractor. Deck and parapet lengths shown elsewhere in the plans are dimensioned to the concrete opening, not the joint opening, and are based on the rolled locking edge rail. If the Contractor elects to use a different locking edge rail, dimensional adjustments may be required. One exception to this would be the strip seal joint at the end of the precast bridge approach slab. For these cases the pavement connector length shall be adjusted, not the length of the bridge approach slab.

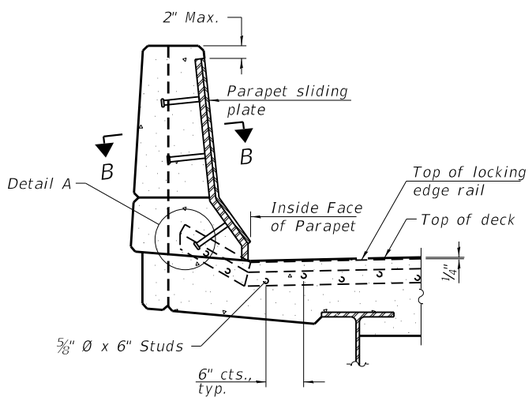

ELEVATION AT PARAPET

(Skews > 30° shown. Skews ≤ 30° similar except as shown in plan view.)

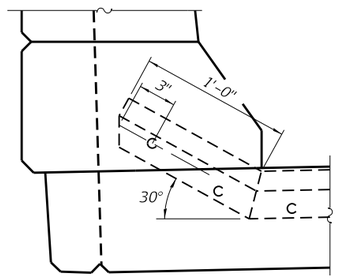

DETAIL A

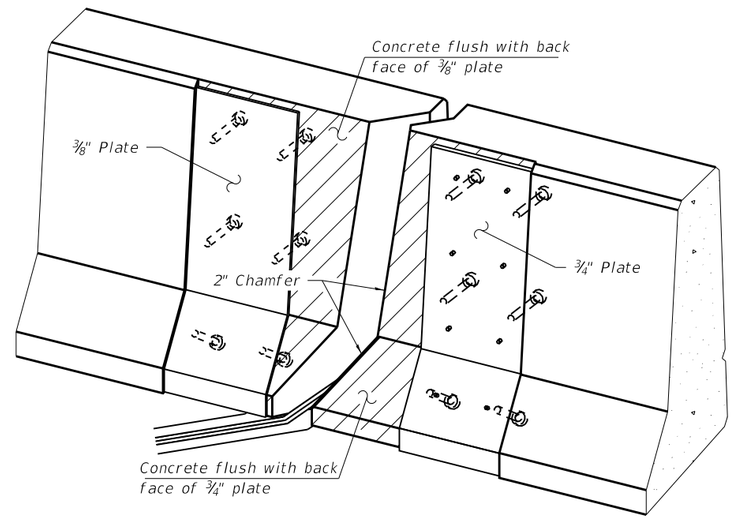

TRIMETRIC VIEW

(Showing embedded plates only)

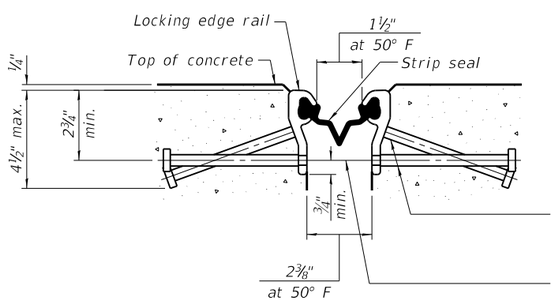

SHOWING ROLLED RAIL JOINT

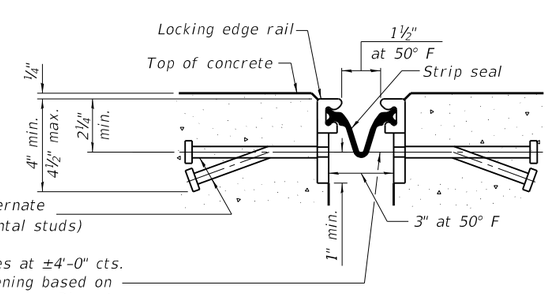

SHOWING WELDED RAIL JOINT

* ⅝" Ø x 6" studs @ 6" cts. (alternate angled/bent studs with horizontal studs)

⅜" ϕ threaded rods in 7/16" ϕ holes at ±4'-0" cts. for holding the proper joint opening based on the temperature during the deck pour. Place to miss studs. All rods shall be burned, or sawed off flush with the plates after concrete is set.

SECTION A-A

* Granular or solid flux filled headed studs conforming to Article 1006.32 of the Std. Specs., automatically end welded.

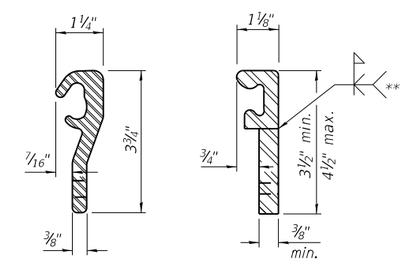

ROLLED (EXTRUDED) RAIL

WELDED RAIL

LOCKING EDGE RAILS

** Back gouge not required if complete joint penetration is verified by mock-up.

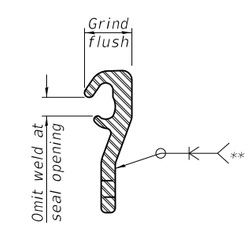

LOCKING EDGE RAIL SPLICE

The inside of the locking edge rail groove shall be free of weld residue. Rolled rail shown, welded rail similar.

TOTAL BILL OF MATERIAL

Item	Unit	Total
Preformed Joint Strip Seal	Foot	181

EJ-SS 8-11-17

MODEL: Default
FILE NAME: P:\2019\190388\W06 I-74 Bridge PSEs\4 CADD - DWG\4.4 Struc\0900019-0020\0900019-0020-68F54-008 Preformed Joint Strip Seal.dgn

TWM ENGINEERING GEOSPATIAL SERVICES
TWM, INC. WWW.TWM-INC.COM
IL DESIGN FIRM LICENSE NO: 184-001220

USER NAME = mjoost	DESIGNED - DRA	REVISED -	
	CHECKED - CDK	REVISED -	
PLOT SCALE = 0:2.0000 ':" / in.	DRAWN - DRA	REVISED -	
PLOT DATE = 12/1/2020	CHECKED - CDK	REVISED -	

STATE OF ILLINOIS
DEPARTMENT OF TRANSPORTATION

PREFORMED JOINT STRIP SEAL
STRUCTURE NO. 090-0019 & 090-0020

SHEET 8 OF 37 SHEETS

F.A.I. RTE.	SECTION	COUNTY	TOTAL SHEETS	SHEET NO.
74	90-15[HB(1-4);VB;B]BP,BJR,BRR	TAZEWELL	192	52
		CONTRACT NO. 68F54		
	ILLINOIS	FED. AID PROJECT		

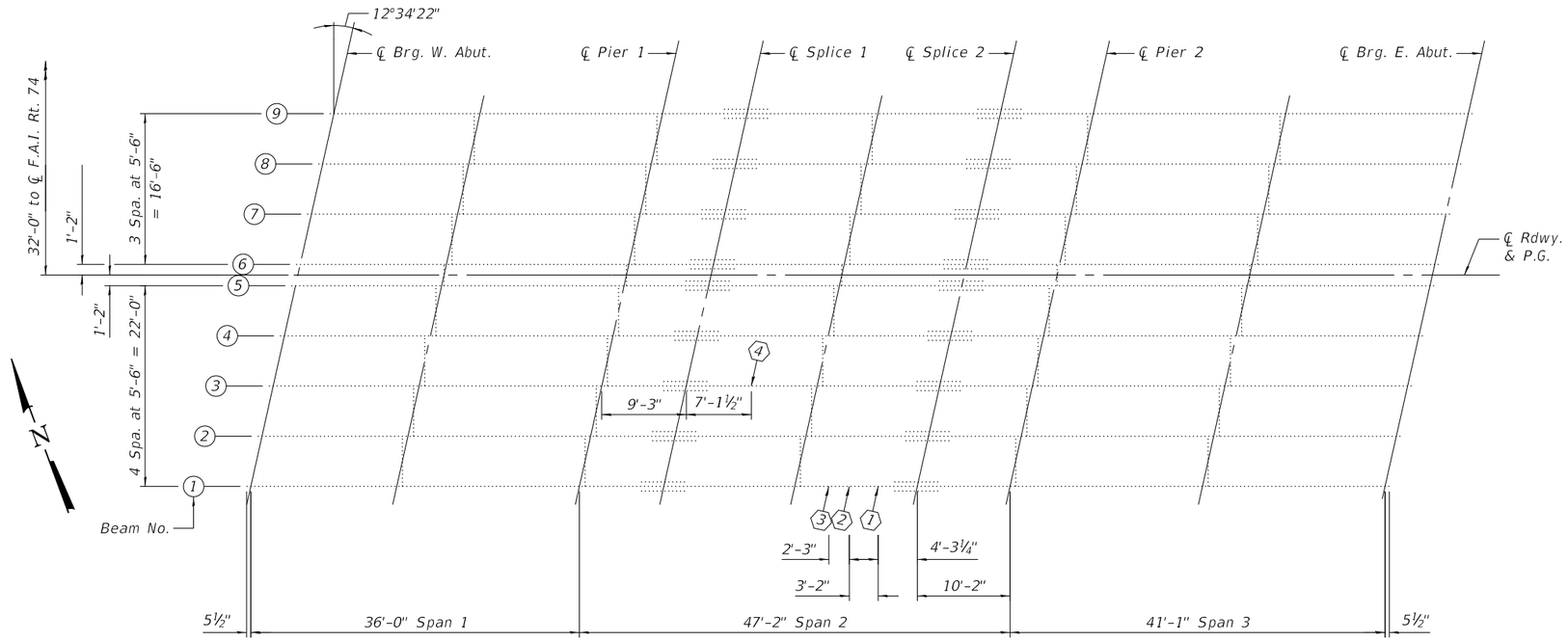

FRAMING PLAN

SN 090-0019

⬡ - Impact number and direciton of impact
For impact deformations see sheet 10 of 37.

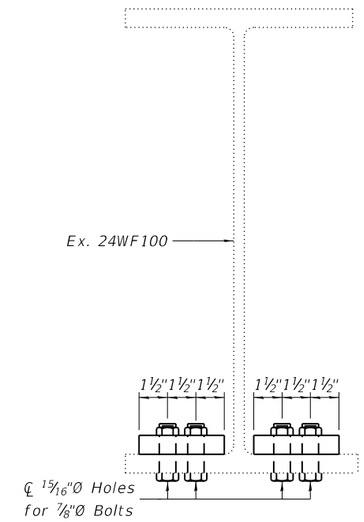

TYPICAL SECTION THRU STRENGTHENING PLATES

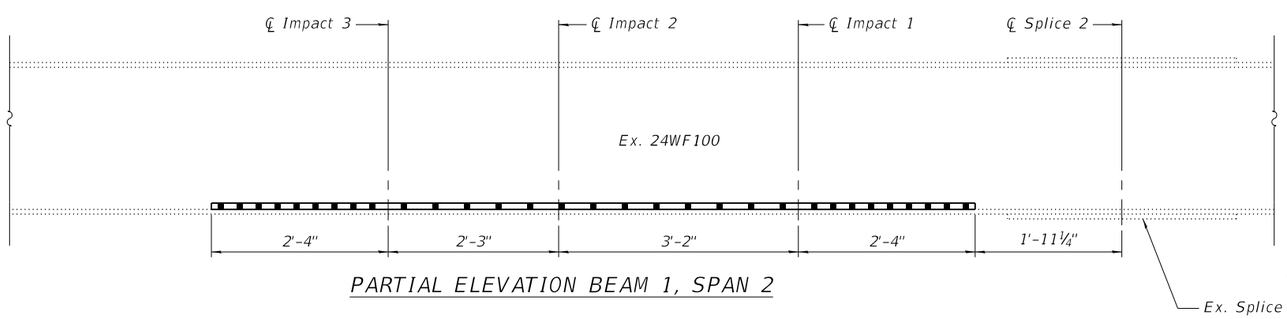

PARTIAL ELEVATION BEAM 1, SPAN 2

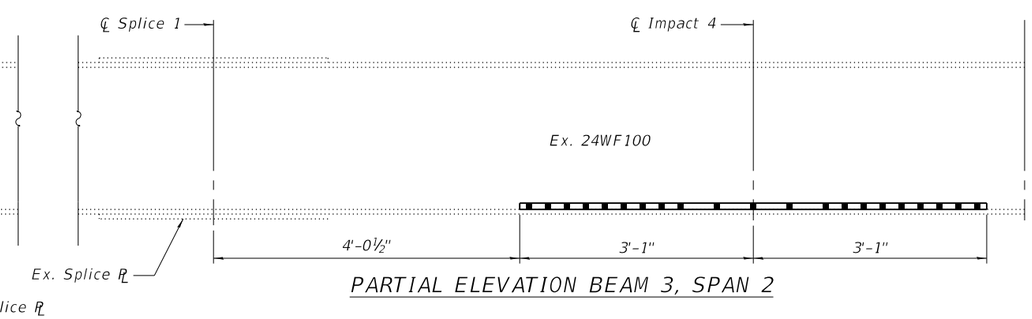

PARTIAL ELEVATION BEAM 3, SPAN 2

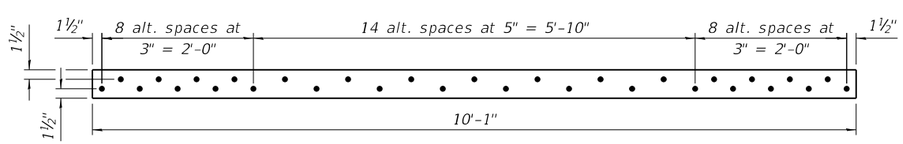

STRENGTHENING PLATES FOR BEAM 1, SPAN 2

PL 1⅛" x 4½" x 10'-1" NTR (2 required)

Notes:

Load carrying components designated "NTR" shall conform to the Impact Testing Requirement, Zone 2.

Cleaning & painting of all contact surfaces shall meet the requirements for Primary Connections as specified in the Special Provision for "Cleaning and Painting Contact Surface Areas of Existing Steel Structures".

BILL OF MATERIAL

Item	Unit	Quantity
Structural Steel Repair	Pound	710

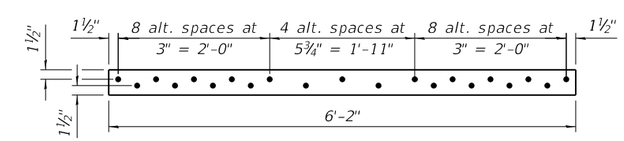

STRENGTHENING PLATES FOR BEAM 3, SPAN 2

PL 1⅛" x 4½" x 6-2" NTR (2 required)

MODEL: Default
FILE NAME: P:\2019\190388WO6 I-74 Bridge PSEs\4 CADD - DWG\4.4 Struc\090019-0020\090019-0020-68F54-009 Framing Plan and Steel Repair 0019.dgn

TWM ENGINEERING & GEOSPATIAL SERVICES	TWM, INC. WWW.TWM-INC.COM IL DESIGN FIRM LICENSE NO: 184-001220	USER NAME = mjoost	DESIGNED - CDK	REVISED -	STATE OF ILLINOIS DEPARTMENT OF TRANSPORTATION
			CHECKED - ANR	REVISED -	
		PLOT SCALE = 0:2.0000 ':' / in.	DRAWN - CDK	REVISED -	
		PLOT DATE = 12/1/2020	CHECKED - ANR	REVISED -	

FFRAMING PLAN & BEAM STRENGTHENING
SN 090-0019

SHEET 9 OF 37 SHEETS

F.A.I. RTE.	SECTION	COUNTY	TOTAL SHEETS	SHEET NO.
74	90-15[HB(1-4);VB;B]BP,BJR,BRR	TAZEWELL	192	53
		CONTRACT NO. 68F54		
		ILLINOIS FED. AID PROJECT		

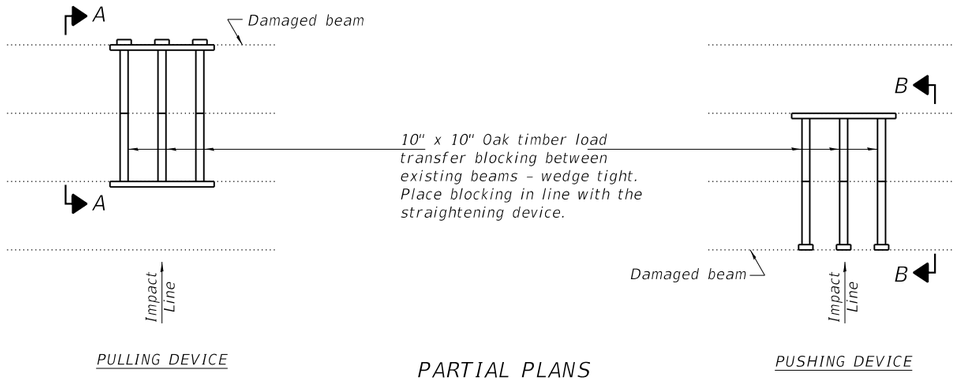

PARTIAL PLANS
SUGGESTED BEAM STRAIGHTENING METHODS

Straightening force shall be maintained on all load transfer blocking during beam straightening.

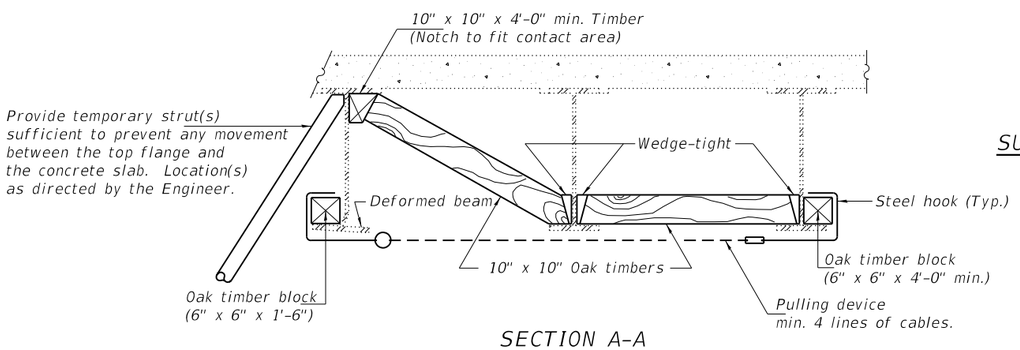

SECTION A-A

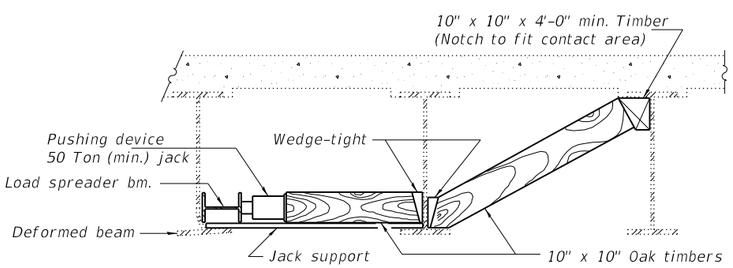

SECTION B-B

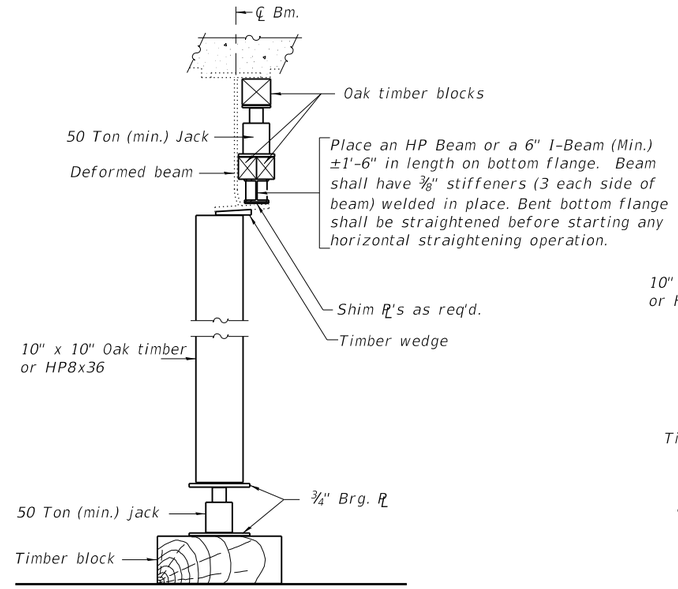

SUGGESTED VERTICAL STRAIGHTENING DETAIL

(To correct flange rotation.)

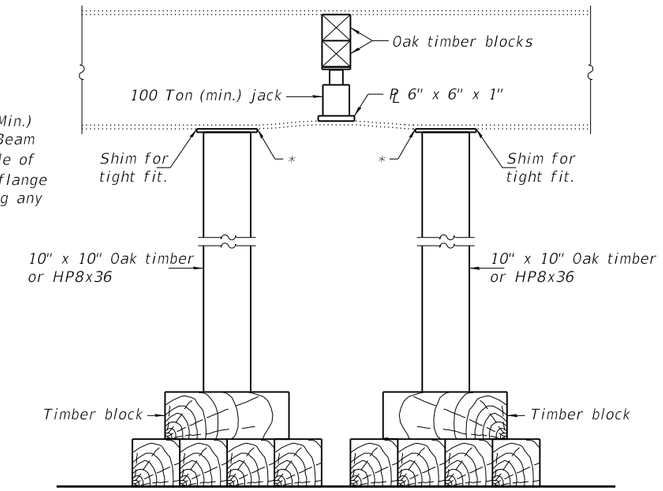

SUGGESTED VERTICAL STRAIGHTENING DETAIL

(To correct localized vertical flange deformations.)

* Edge of plate shall line up with edge of deformation.

Note:
Braces and jack assembly shall be placed on same side of web.
Bent bottom flange shall be straightened before starting any horizontal straightening operations.

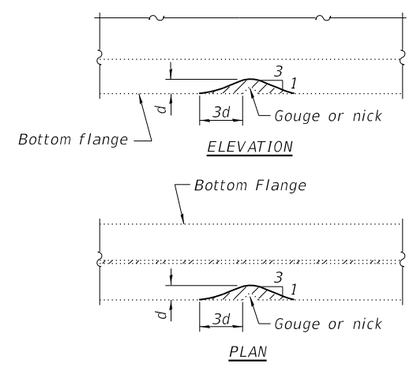

GRINDING DETAIL

Grind existing nicks, gouges and shallow cracks in the damaged beams as detailed. Ground surfaces shall be inspected for cracks using dye penetrant or magnetic particle testing prior to initiating any beam straightening operations. Any cracks that cannot be removed by grinding approximately ¼" deep shall be identified and reported to the Bureau of Bridges and Structures for further disposition. Ground surfaces shall be spot cleaned and painted with an aluminum epoxy mastic primer followed by a finish coat to match the color of the existing beam. Cost of grinding, testing and spot painting included with Beam Straightening.

BEAM DEFORMATIONS

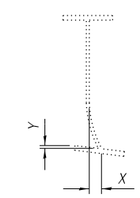

EXISTING DEFORMATION TO BE STRAIGHTENED

(Looking West - Beam 1)
(Looking East - Beam 3)
(Approximate max. deflections)
Deflected length of beam to be straightened is approximately 14'-0" at Beam 1 and 8'-0" at Beam 3.

REP-1 8-16-2018

TWM ENGINEERING GEOSPATIAL SERVICES	TWM, INC. WWW.TWM-INC.COM IL DESIGN FIRM LICENSE NO: 184-001220	USER NAME = mjoost	DESIGNED - CDK	REVISED -	STATE OF ILLINOIS DEPARTMENT OF TRANSPORTATION	BEAM STRAIGHTENING STRUCTURE NO. 090-0019	F.A.I. RTE.	SECTION	COUNTY	TOTAL SHEETS	SHEET NO.
			CHECKED - ANR	REVISED -			74	90-15[HB(1-4);VB;B]BP,BJR,BRR	TAZEWELL	192	54
		PLOT SCALE = 0:2.0000 ':" / in.	DRAWN - CDK	REVISED -					CONTRACT NO. 68F54		
		PLOT DATE = 12/1/2020	CHECKED - ANR	REVISED -		SHEET 10 OF 37 SHEETS		ILLINOIS	FED. AID PROJECT		

MODEL: Default
FILE NAME: P:\2019\190388\WO6 I-74 Bridge PSEs\4 CADD - DWGs\4.4 Struc\090019-0020\090019-0020-68F54-010 Beam Straightening 0019.dgn

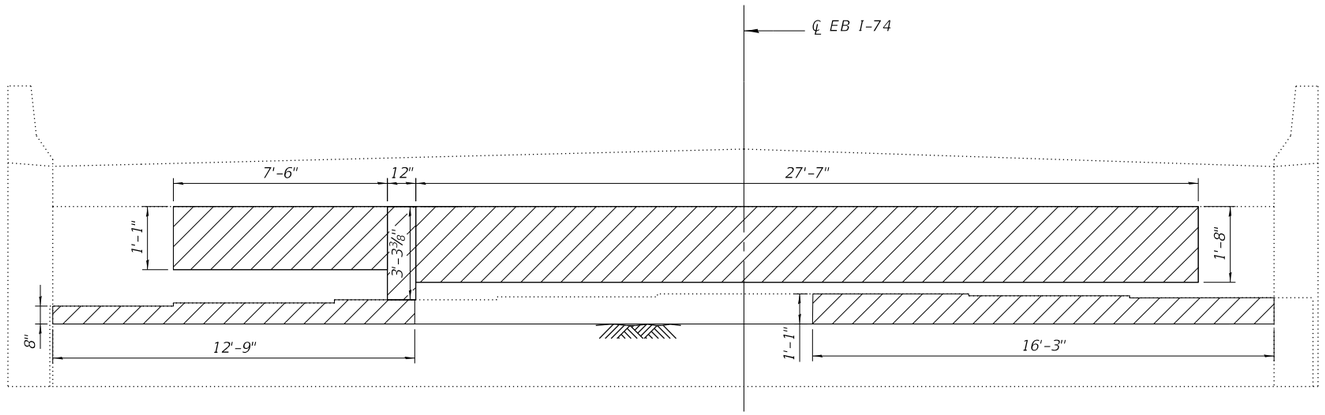

ELEVATION - REPAIR

- Structural Repair of Concrete
(Depth equal to or less than 5 inches)

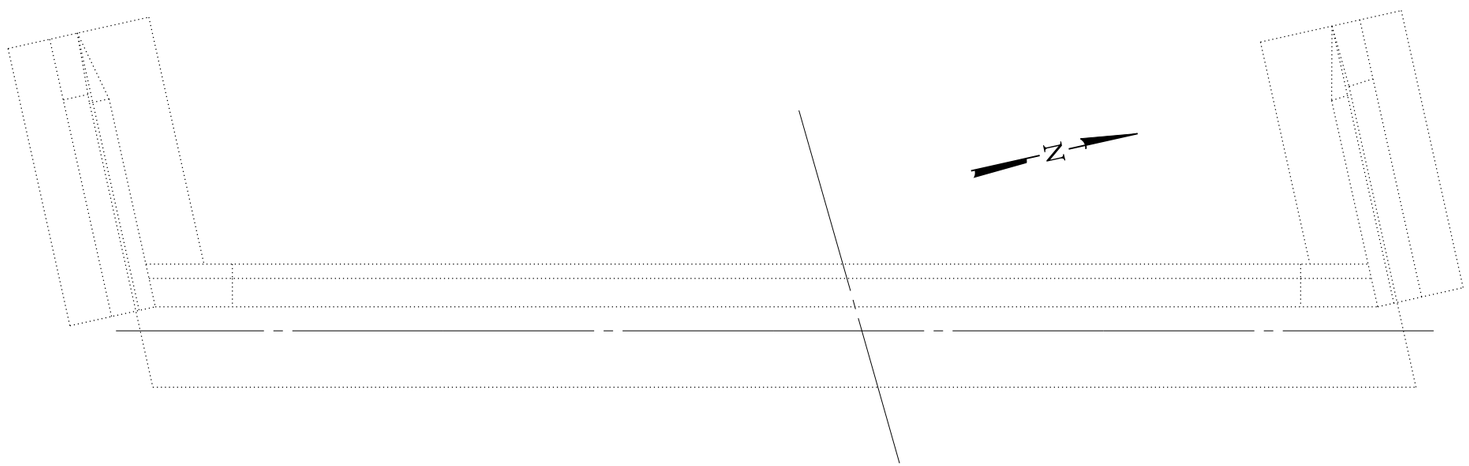

PLAN - REPAIR

BILL OF MATERIAL

Item	Unit	Quantity
Structural Repair of Concrete (Depth Equal to or Less than 5 Inches)	Sq. Ft.	83.5

MODEL: Default
FILE NAME: P:\2019\19038BW06 I-74 Bridge PSE\4 CADD - DWG\4.4 Struc\09900019-0020\09900019-0020-68F54-011 W. Abutment Repair Details 0019.dgn

TWM ENGINEERING & GEOSPATIAL SERVICES	TWM, INC. WWW.TWM-INC.COM IL DESIGN FIRM LICENSE NO: 184-001220	USER NAME = mjoost	DESIGNED - NP	REVISED -	STATE OF ILLINOIS DEPARTMENT OF TRANSPORTATION
			CHECKED - MJJ	REVISED -	
		PLOT SCALE = 0:2.0000 ':' / in.	DRAWN - NP	REVISED -	
		PLOT DATE = 12/1/2020	CHECKED - MJJ	REVISED -	

W. ABUTMENT CONCRETE REPAIR DETAILS
STRUCTURE NO. 090-0019

SHEET 11 OF 37 SHEETS

F.A.I. RTE.	SECTION	COUNTY	TOTAL SHEETS	SHEET NO.
74	90-15(HB(1-4);VB;B)BP,BJR,BRR	TAZEWELL	192	55
		CONTRACT NO. 68F54		
		ILLINOIS	FED. AID PROJECT	

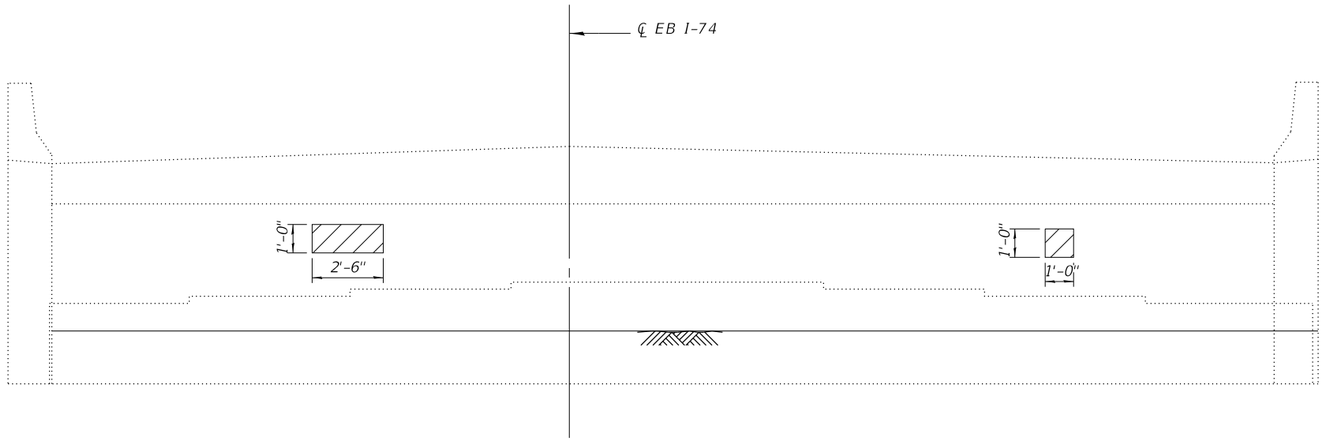

ELEVATION - REPAIR

- Structural Repair of Concrete
(Depth equal to or less than 5 inches)

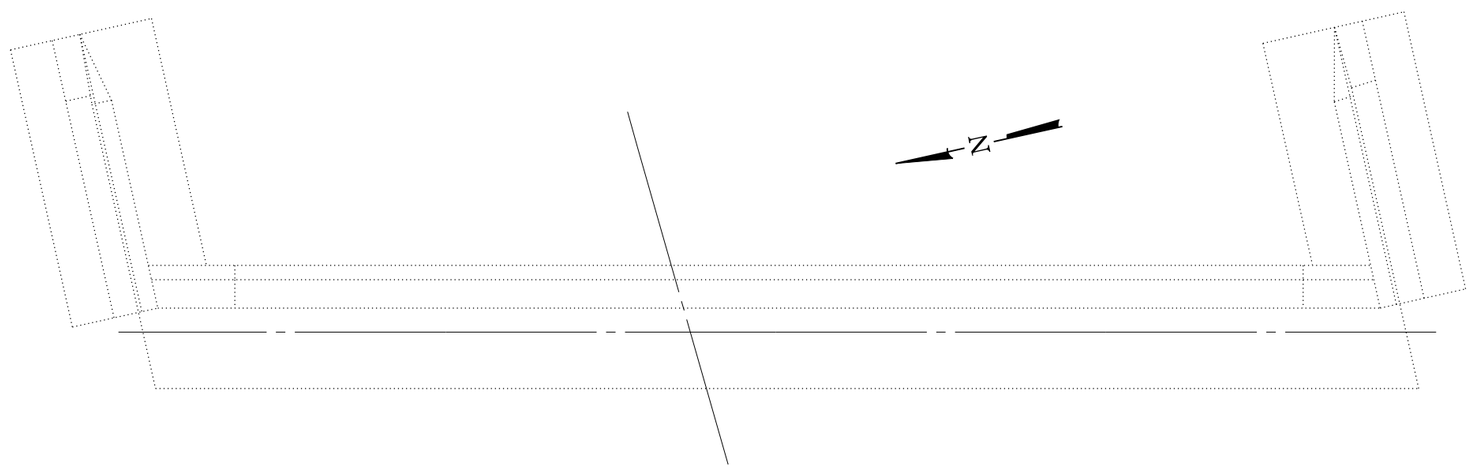

PLAN - REPAIR

BILL OF MATERIAL

Item	Unit	Quantity
Structural Repair of Concrete (Depth Equal to or Less than 5 Inches)	Sq. Ft.	3.5

MODEL: Default
FILE NAME: P:\2019\190388\W06 I-74 Bridge PSEs\4 CADD - DWG\4.4 Struc\0900019-0020\0900019-0020-68F54-012_E. Abutment Repair Details 0019.dgn

TWM ENGINEERING & GEOSPATIAL SERVICES
TWM, INC.
WWW.TWM-INC.COM
IL DESIGN FIRM LICENSE NO: 184-001220

USER NAME = mjoost	DESIGNED - NP	REVISED -	
	CHECKED - MJJ	REVISED -	
PLOT SCALE = 0:2.0000 ':" / in.	DRAWN - NP	REVISED -	
PLOT DATE = 12/1/2020	CHECKED - MJJ	REVISED -	

STATE OF ILLINOIS
DEPARTMENT OF TRANSPORTATION

E. ABUTMENT CONCRETE REPAIR DETAILS
STRUCTURE NO. 090-0019

SHEET 12 OF 37 SHEETS

F.A.I. RTE.	SECTION	COUNTY	TOTAL SHEETS	SHEET NO.
74	90-15(HB(1-4);VB;B)BP,BJR,BRR	TAZEWELL	192	56
		CONTRACT NO. 68F54		
	ILLINOIS	FED. AID PROJECT		

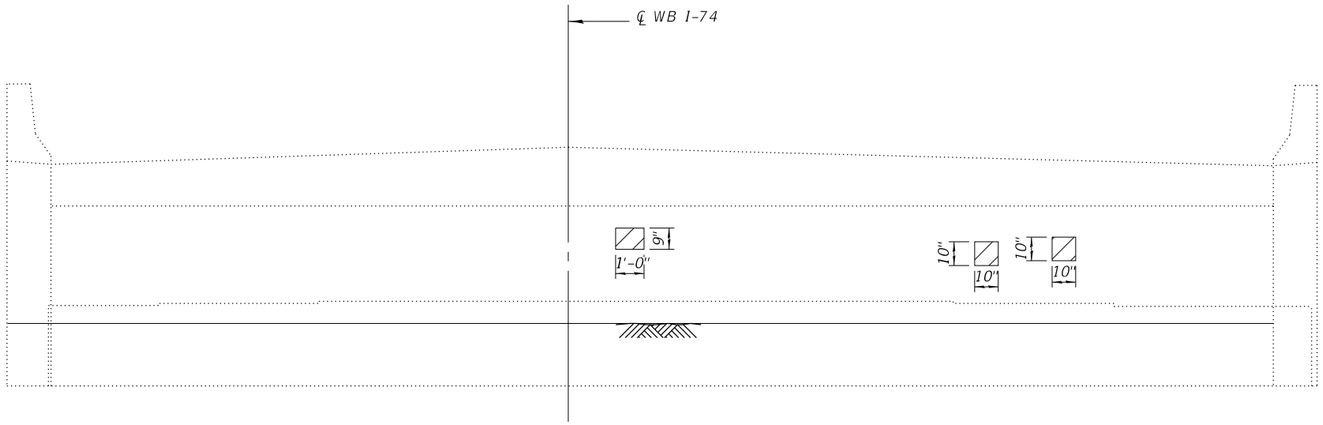

ELEVATION - REPAIR

- Structural Repair of Concrete
(Depth equal to or less than 5 inches)

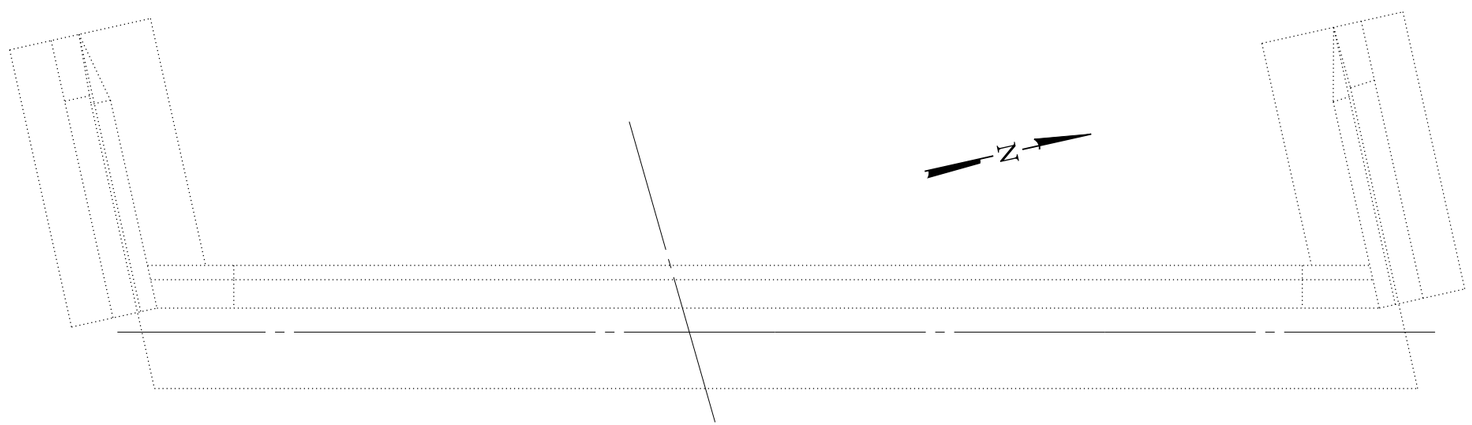

PLAN - REPAIR

BILL OF MATERIAL

Item	Unit	Quantity
Structural Repair of Concrete (Depth Equal to or Less than 5 Inches)	Sq. Ft.	2.1

MODEL: Default
FILE NAME: P:\2019\190388\W06 I-74 Bridge PSEs\4 CADD - DWG\4.4 Struc\0900019-0020\0900019-0020-68F54-013 W. Abutment Repair Details 0020.dgn

TWM ENGINEERING & GEOSPATIAL SERVICES
TWM, INC.
WWW.TWM-INC.COM
IL DESIGN FIRM LICENSE NO: 184-001220

USER NAME = mjoost	DESIGNED - NP	REVISED -	
	CHECKED - MJJ	REVISED -	
PLOT SCALE = 0:2.0000 ':" / in.	DRAWN - NP	REVISED -	
PLOT DATE = 12/1/2020	CHECKED - MJJ	REVISED -	

STATE OF ILLINOIS
DEPARTMENT OF TRANSPORTATION

W. ABUTMENT CONCRETE REPAIR DETAILS
STRUCTURE NO. 090-0020

SHEET 13 OF 37 SHEETS

F.A.I. RTE.	SECTION	COUNTY	TOTAL SHEETS	SHEET NO.
74	90-15(HB(1-4);VB;B)BP,BJR,BRR	TAZEWELL	192	57
		CONTRACT NO. 68F54		
	ILLINOIS	FED. AID PROJECT		

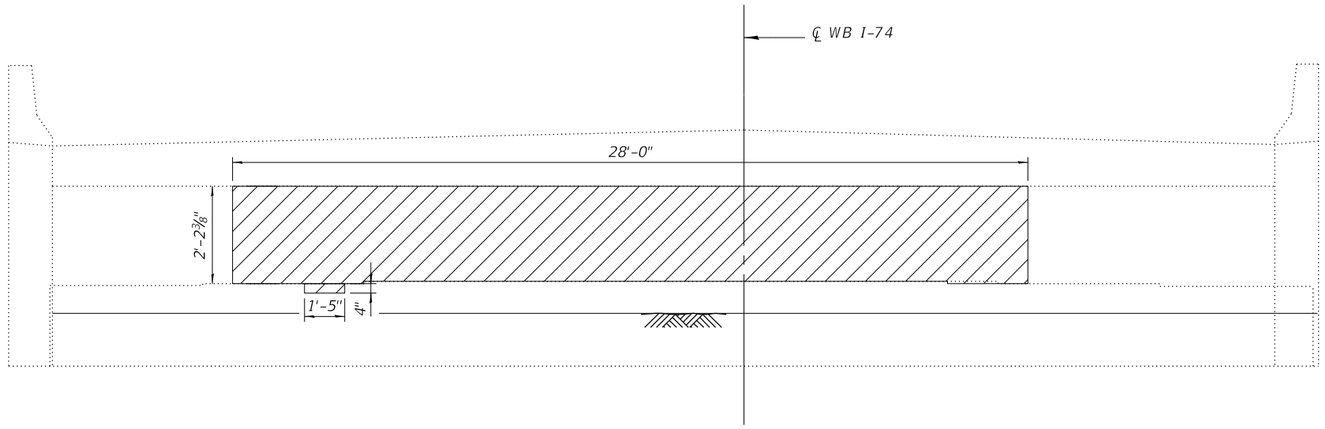

ELEVATION - REPAIR

- Structural Repair of Concrete
(Depth equal to or less than 5 inches)

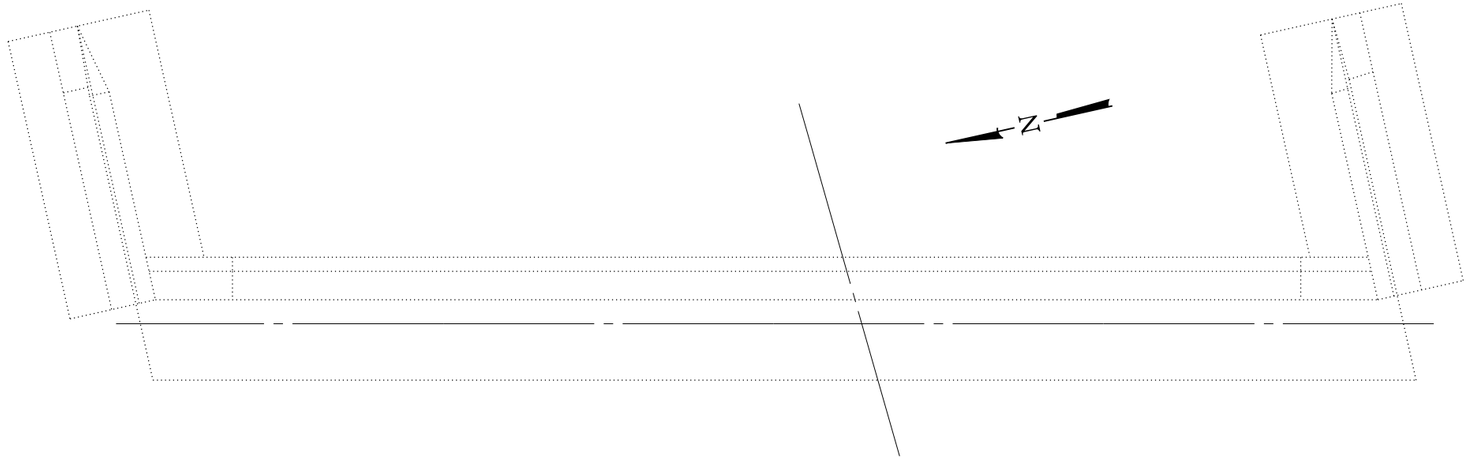

PLAN - REPAIR

BILL OF MATERIAL

Item	Unit	Quantity
Structural Repair of Concrete (Depth Equal to or Less than 5 Inches)	Sq. Ft.	62.0

MODEL: Default
FILE NAME: P:\2019\190388\WO6 I-74 Bridge PSEs\4 CADD - DWG\4-4 Struc\0900019-0020\0900019-0020-68F54-014_E_Abutment Repair Details 0020.dgn

TWM ENGINEERING & GEOSPATIAL SERVICES
TWM, INC.
WWW.TWM-INC.COM
IL DESIGN FIRM LICENSE NO: 184-001220

USER NAME = mjoost	DESIGNED - NP	REVISED -	
	CHECKED - MJJ	REVISED -	
PLOT SCALE = 0:2.0000 ':" / in.	DRAWN - NP	REVISED -	
PLOT DATE = 12/1/2020	CHECKED - MJJ	REVISED -	

STATE OF ILLINOIS
DEPARTMENT OF TRANSPORTATION

E. ABUTMENT CONCRETE REPAIR DETAILS
STRUCTURE NO. 090-0020

SHEET 14 OF 37 SHEETS

F.A.I. RTE.	SECTION	COUNTY	TOTAL SHEETS	SHEET NO.
74	90-15[HB(1-4);VB;B]BP,BJR,BRR	TAZEWELL	192	58
		CONTRACT NO. 68F54		
	ILLINOIS	FED. AID PROJECT		

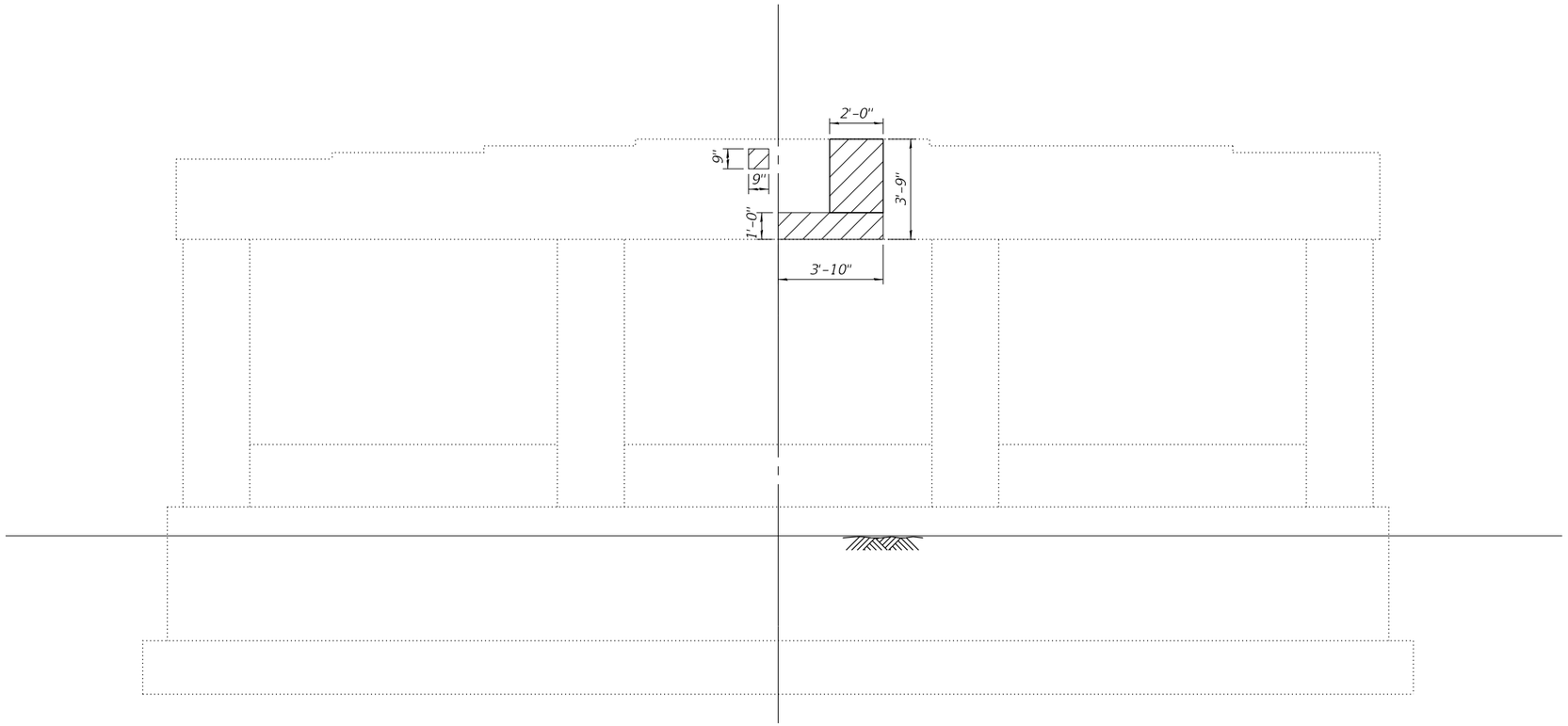

EAST PIER ELEVATION - REPAIR

(Looking West)

- Structural Repair of Concrete (Depth equal to or less than 5 inches)

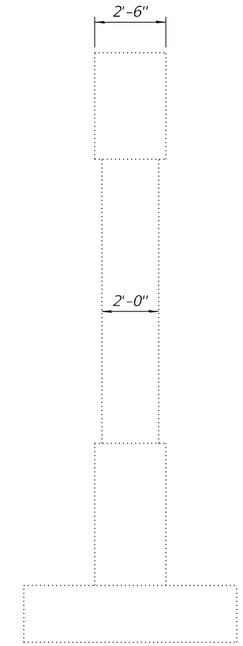

END ELEVATION

(Looking North)

EAST PIER FOOTING PLAN

BILL OF MATERIAL

Item	Unit	Quantity
Structural Repair of Concrete (Depth Equal to or Less than 5 Inches)	Sq. Ft.	9.9

MODEL: Default
FILE NAME: P:\2019\190388\WO6 I-74 Bridge PSEs\4 CADD - DWGs\4.4 Struc\0900019-0020\0900019-0020-68F54-015_E_Pier Repair Details 0019.dgn

TWM ENGINEERING & GEOSPATIAL SERVICES	TWM, INC. WWW.TWM-INC.COM IL DESIGN FIRM LICENSE NO: 184-001220	USER NAME = mjoost	DESIGNED - NP	REVISED -	STATE OF ILLINOIS DEPARTMENT OF TRANSPORTATION	EAST PIER CONCRETE REPAIR DETAILS STRUCTURE NO. 090-0019	F.A.I. RTE.	SECTION	COUNTY	TOTAL SHEETS	SHEET NO.
			CHECKED - MJJ	REVISED -			74	90-15[HB(1-4);VB;B]BP,BJR,BRR	TAZEWELL	192	59
		PLOT SCALE = 0:2.0000 ':' / in.	DRAWN - NP	REVISED -			CONTRACT NO. 68F54				
		PLOT DATE = 12/1/2020	CHECKED - MJJ	REVISED -		SHEET 15 OF 37 SHEETS	ILLINOIS	FED. AID PROJECT			

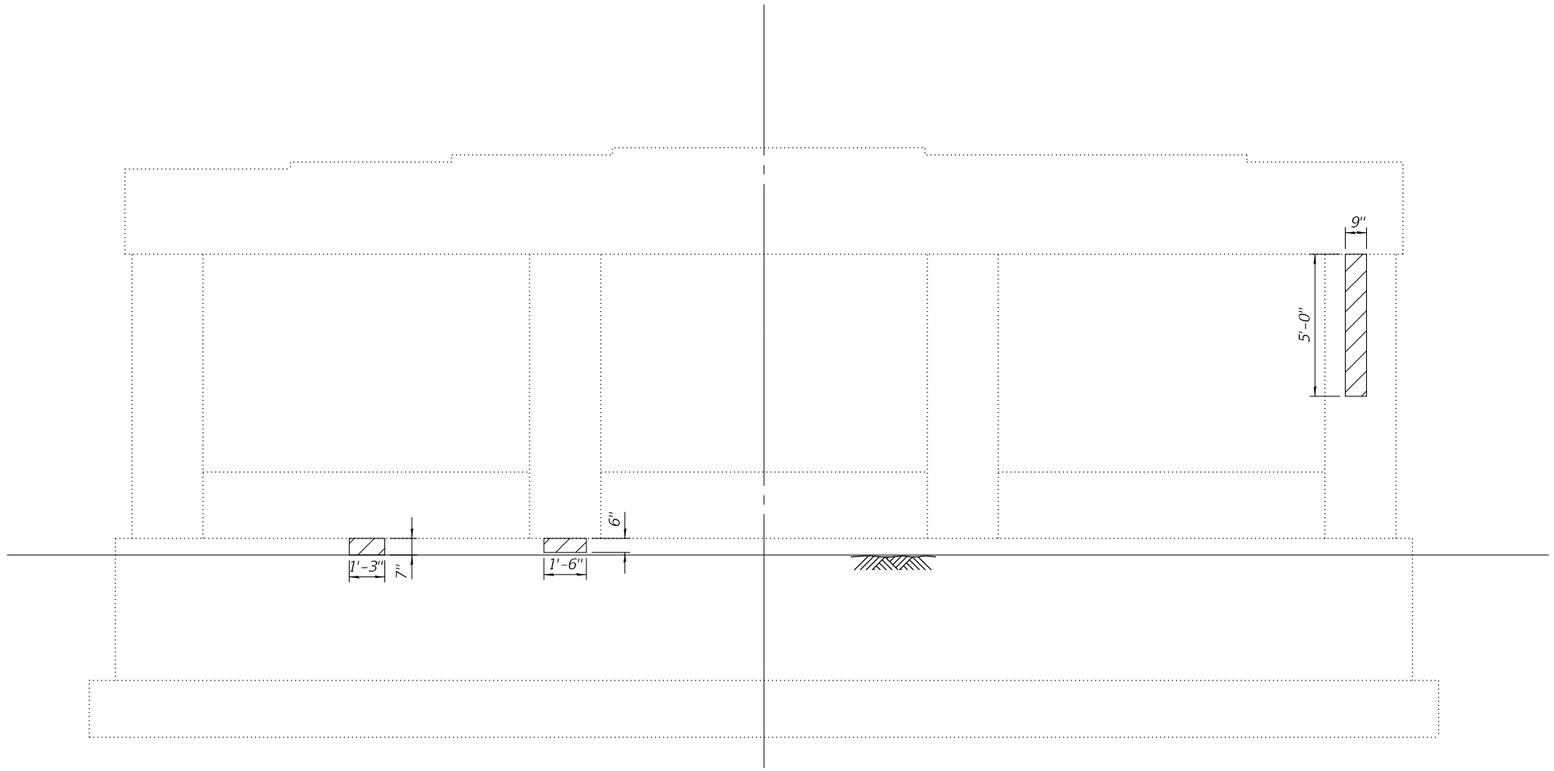

WEST PIER ELEVATION - REPAIR

(Looking East)

- Structural Repair of Concrete
(Depth equal to or less than 5 inches)

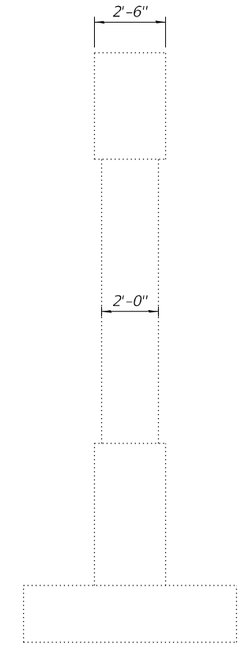

END ELEVATION

(Looking South)

WEST PIER FOOTING PLAN

BILL OF MATERIAL

Item	Unit	Quantity
Structural Repair of Concrete (Depth Equal to or Less than 5 Inches)	Sq. Ft.	9.4

MODEL: Default
FILE NAME: P:\2019\190388\WO6 I-74 Bridge PSEs\4 CADD - DWG\4.4 Struc\0900019-0020\0900019-0020-68F54-016 W. Pier Repair Details 0019.dgn

TWM ENGINEERING & GEOSPATIAL SERVICES
TWM, INC.
WWW.TWM-INC.COM
IL DESIGN FIRM LICENSE NO: 184-001220

USER NAME = mjoost	DESIGNED - NP	REVISED -	
	CHECKED - MJJ	REVISED -	
PLOT SCALE = 0:2.0000 ':' / in.	DRAWN - NP	REVISED -	
PLOT DATE = 12/1/2020	CHECKED - MJJ	REVISED -	

STATE OF ILLINOIS
DEPARTMENT OF TRANSPORTATION

WEST PIER CONCRETE REPAIR DETAILS
STRUCTURE NO. 090-0019

SHEET 16 OF 37 SHEETS

F.A.I. RTE.	SECTION	COUNTY	TOTAL SHEETS	SHEET NO.
74	90-15[HB(1-4);VB;B]BP,BJR,BRR	TAZEWELL	192	60
		CONTRACT NO. 68F54		
	ILLINOIS	FED. AID PROJECT		

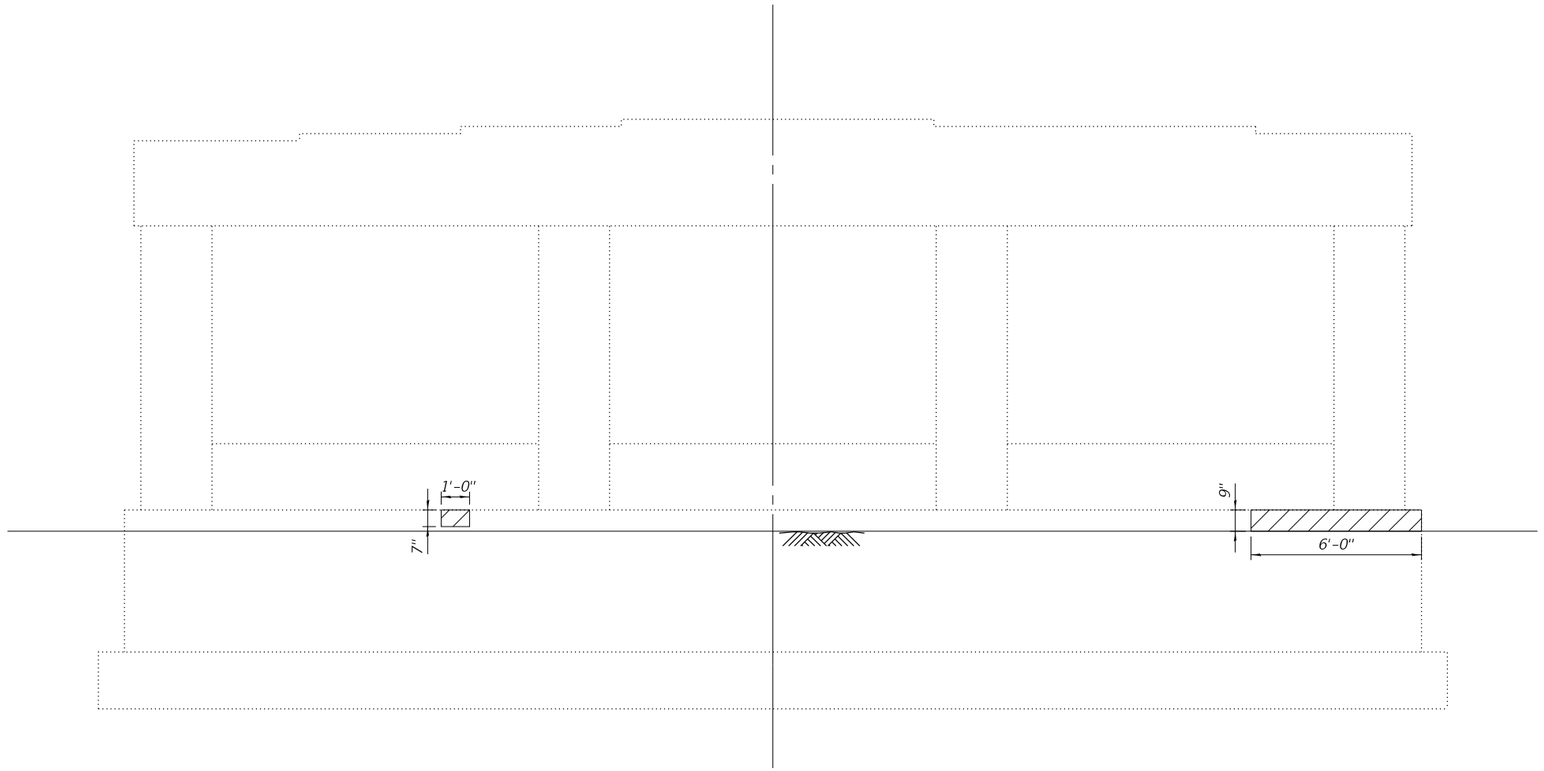

WEST PIER ELEVATION - REPAIR

(Looking East)

- Structural Repair of Concrete
(Depth equal to or less than 5 inches)

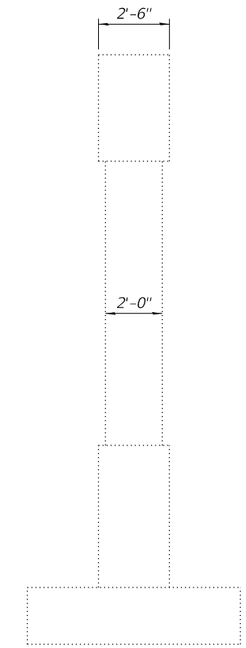

END ELEVATION

(Looking South)

WEST PIER FOOTING PLAN

Note:
No significant damage has been found in the East Pier.

BILL OF MATERIAL

Item	Unit	Quantity
Structural Repair of Concrete (Depth Equal to or Less than 5 Inches)	Sq. Ft.	5.1

MODEL: Default
FILE NAME: P:\2019\190388\WO6 I-74 Bridge PSEs\4 CADD - DWGs\4.4 Struc\0900019-0020\0900019-0020-68F54-017 W. Pier Repair Details 0020.dgn

TWM ENGINEERING & GEOSPATIAL SERVICES
TWM, INC.
WWW.TWM-INC.COM
IL DESIGN FIRM LICENSE NO: 184-001220

USER NAME = mjoost	DESIGNED - NP	REVISED -	
	CHECKED - MJJ	REVISED -	
PLOT SCALE = 0:2.0000 ':' / in.	DRAWN - NP	REVISED -	
PLOT DATE = 12/1/2020	CHECKED - MJJ	REVISED -	

STATE OF ILLINOIS
DEPARTMENT OF TRANSPORTATION

WEST PIER CONCRETE REPAIR DETAILS
STRUCTURE NO. 090-0020

SHEET 17 OF 37 SHEETS

F.A.I. RTE.	SECTION	COUNTY	TOTAL SHEETS	SHEET NO.
74	90-15[HB(1-4);VB;B]BP,BJR,BRR	TAZEWELL	192	61
		CONTRACT NO. 68F54		
		ILLINOIS	FED. AID PROJECT	

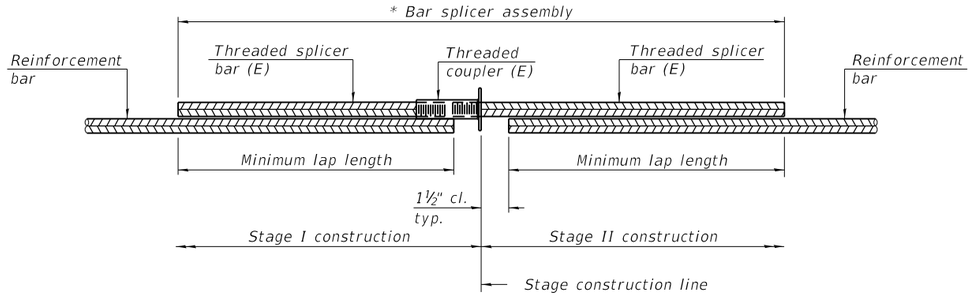

STANDARD BAR SPLICER ASSEMBLY PLAN

(All components shall be provided from one supplier)

Threaded splicer bar length = min. lap length + 1½" + thread length

* Epoxy not required on Bar Splicer Assembly components used in conjunction with black bars.

Location	Bar size	No. assemblies required	Minimum lap length
Deck	5	32	3'-6"
Abut. Hatch Block	6	16	4'-0"

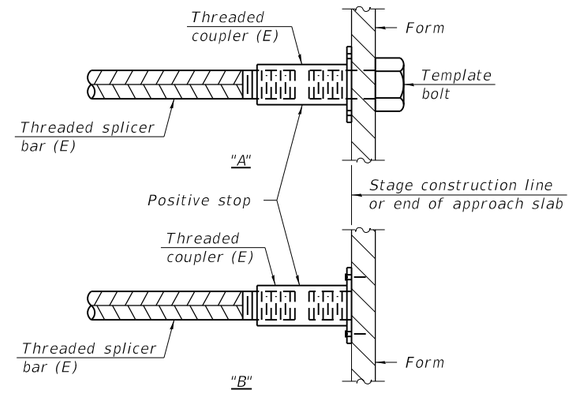

INSTALLATION AND SETTING METHODS

"A" : Set bar splicer assembly by means of a template bolt.
"B" : Set bar splicer assembly by nailing to wood forms or cementing to steel forms.
(E) : Indicates epoxy coating.

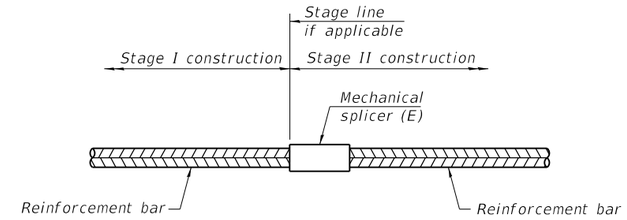

STANDARD MECHANICAL SPLICER

Location	Bar size	No. assemblies required

Notes:
Splicer bars shall be deformed with threaded ends and have a minimum 60 ksi yield strength.
All reinforcement shall be lapped and tied to the splicer bars.
Bar splicer assemblies shall be epoxy coated according to the requirements for reinforcement bars. See Section 508 of the Standard Specifications.
See approved list of bar splicer assemblies and mechanical splicers for alternatives.

BSD-1 1-1-2020

MODEL: Default
FILE NAME: P:\2019\190388\WO6 I-74 Bridge PSEs\4 CADD - DWGs\4.4 Struc\0900019-0020\0900019-0020-68F54-018 Bar Splicer Assembly Details.dgn

TWM ENGINEERING & GEOSPATIAL SERVICES
TWM, INC.
WWW.TWM-INC.COM
IL DESIGN FIRM LICENSE NO: 184-001220

USER NAME = mjoost	DESIGNED - DRA	REVISED -	
	CHECKED - CDK	REVISED -	
PLOT SCALE = 0:2.0000 ':' / in.	DRAWN - DRA	REVISED -	
PLOT DATE = 12/1/2020	CHECKED - CDK	REVISED -	

STATE OF ILLINOIS
DEPARTMENT OF TRANSPORTATION

BAR SPLICER ASSEMBLY AND MECHANICAL SPLICER DETAILS
STRUCTURE NO. 090-0019 & 090-0020

SHEET 18 OF 37 SHEETS

F.A.I. RTE.	SECTION	COUNTY	TOTAL SHEETS	SHEET NO.
74	90-15[HB(1-4);VB;B]BP,BJR,BRR	TAZEWELL	192	62
		CONTRACT NO. 68F54		
	ILLINOIS	FED. AID PROJECT		

Bench Mark: Chiseled "□" top-center W. conc. retaining wall under S.N.'s 090-0019 (E.B.) & 090-0020 (W.B.). Elev. 730.73

Existing Structures: S.N. 090-0019 & 090-0020 Built 1960 as F.A.I. Rte. 5, Section 90-15HB-1 at Sta. 634+12.35. Existing structures are 3-span reinf. conc. deck on steel WF supported on spill-thru pile bent abuts. and pile supported multi-column piers. Each structure 43'-8" O.-O. deck, 128'-1" Bk.-Bk. abuts. Concrete deck to be removed and replaced. Traffic to be maintained utilizing cross overs.

No salvage

STATE OF ILLINOIS
DEPARTMENT OF TRANSPORTATION

ROUTE NO.	SECTION	COUNTY	TOTAL SHEETS	SHEET NO.
F.A.I. 74	90 (15HB-1) 1-1	TAZEWELL	101	26
FED. ROAD DIST. NO. 7		ILLINOIS	FED. AID PROJECT:	

SHEET NO. 1
29 SHEETS

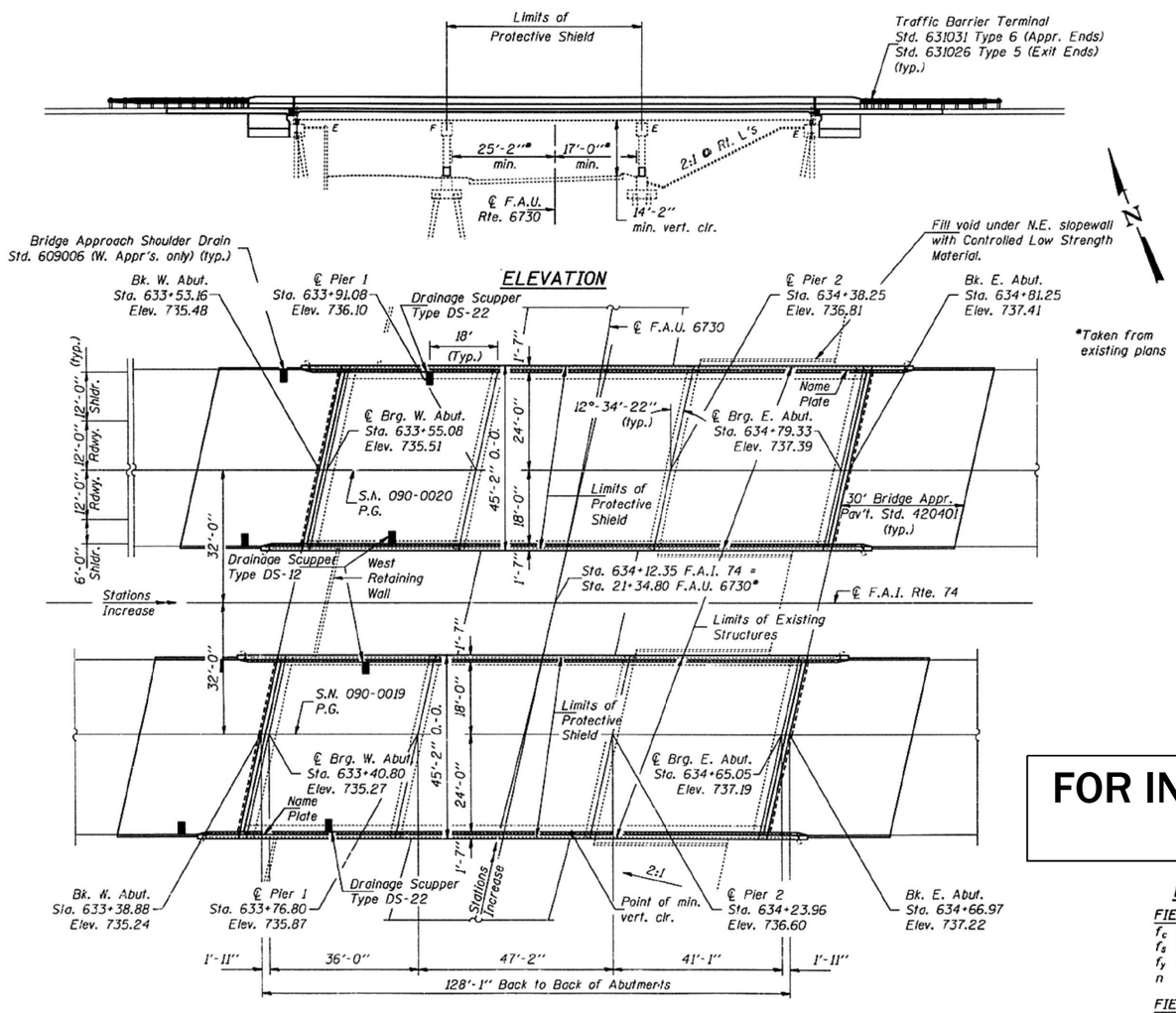

PLAN

STATION 634+12.35
REBUILT BY
STATE OF ILLINOIS
F.A.I. RT. 74 SECTION 90(15HB-1)I-1
F.A. PROJECT:
LOADING HS20 & ALT.
STR. NO. 090-0019

NAME PLATE - E.B. LANES
See Std. 515001

STATION 634+12.35
REBUILT BY
STATE OF ILLINOIS
F.A.I. RT. 74 SECTION 90(15HB-1)I-1
F.A. PROJECT:
LOADING HS20 & ALT.
STR. NO. 090-0020

NAME PLATE - W.B. LANES
See Std. 515001

Note:
Existing Name Plate is to be cleaned and relocated next to the new Name Plate. Included in cost of Name Plates.

TOTAL BILL OF MATERIAL

ITEM	UNIT	SUPER	SUB	TOTAL
Removal of Existing Concrete Deck	Each	2		2
Concrete Removal	Cu. Yd.		38.5	38.5
Concrete Structures	Cu. Yd.		72.0	72.0
Concrete Superstructure	Cu. Yd.	354.5		354.5
Elastomeric Bearing Assembly Type I	Each	18		18
Elastomeric Bearing Assembly Type II	Each	18		18
Preformed Joint Seal 2½"	Foot	88		88
Preformed Joint Seal 4"	Foot	88		88
Bridge Deck Grooving	Sq. Yd.	1117		1117
Furnishing and Erecting Structural Steel	Pound	21200		21200
Stud Shear Connectors	Each	6912		6912
Reinforcement Bars, Epoxy Coated	Pound	75910	10800	86710
Name Plates	Each	2		2
Drainage Scuppers	Each	4		4
Protective Coat	Sq. Yd.	1412		1412
Jack and Remove Existing Bearings	Each	36		36
Structure Excavation	Cu. Yd.		152.2	152.2
Formed Concrete Repair (Depth less than or equal to 5")	Sq. Ft.		81.1	81.1
Structural Steel Removal	Pound	6160		6160
Bridge Seat Sealer	Sq. Ft.		453	453
Protective Shield	Sq. Yd.	474		474
Controlled Low Strength Material	Cu. Yd.		1.0	1.0

FOR INFORMATION ONLY

DESIGN STRESSES

FIELD UNITS (Existing Structure)
f_c = 1,400 psi
f_s = 20,000 psi (reinforcement)
f_y = 33,000 psi (structural steel)
n = 10

FIELD UNITS (New Construction)
f'_c = 3,500 psi
f_y = 60,000 psi (reinforcement)
f_y = 36,000 p.s.i. M270 Gr. 36 (Struct. Steel)

LOADING HS20 & ALT.

Future Wearing Surface not allowed.

DESIGN SPECIFICATIONS

1996 AASHTO with 1997 and 1998 Interims
1995 Seismic Retrofitting Guidelines for Highway Bridges FHWA/RD-94/052

SEISMIC DATA

Seismic Performance Category (SPC) = A
Bedrock Acceleration Coefficient (A) = 4.3%g
Site Coefficient (S) = 1.2

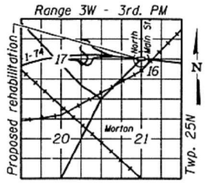

LOCATION SKETCH

GENERAL PLAN
I-74 OVER
NORTH MAIN STREET (F.A.U. RTE. 6730)
F.A.I. RTE. 74 - SEC. 90(15HB-1)I-1
TAZEWELL COUNTY
STATION 634+12.35
STRUCTURE NO. 090-0019 (E.B.)
STRUCTURE NO. 090-0020 (W.B.)

DESIGNED	Chad Fruehling	January 26, 2000
CHECKED	Nicholas J. Gould	EXAMINED Thomas J. Domalle, ENGINEER OF BRIDGE DESIGN
DRAWN	Michael R. Gillette	PASSED Robert E. Anderson, ENGINEER OF BRIDGES AND STRUCTURES
CHECKED	CJF NJG	

STATE OF ILLINOIS ROBERT E. ANDERSON 001-004625 REGISTERED STRUCTURAL ENGINEER

EXPIRES 11-30-2000

MODEL: Default
FILE NAME: P:\2019\190388\W06 I-74 Bridge PSEs\4 CADD - DWG\4.4 Struc\0900019-0020\0900019-0020-68F54-019 Existing Plan & Elevation.dgn

TWM ENGINEERING GEOSPATIAL SERVICES
TWM, INC. WWW.TWM-INC.COM
IL DESIGN FIRM LICENSE NO: 184-001220

USER NAME = mjoost	DESIGNED - NP	REVISED -
	CHECKED - ALN	REVISED -
PLOT SCALE = 0:2.0000 ':' / in.	DRAWN - NP	REVISED -
PLOT DATE = 12/1/2020	CHECKED - ALN	REVISED -

STATE OF ILLINOIS
DEPARTMENT OF TRANSPORTATION

EXISTING PLAN AND ELEVATION
SN 090-0019 & 090-0020
SHEET 19 OF 37 SHEETS

F.A.I. RTE.	SECTION	COUNTY	TOTAL SHEETS	SHEET NO.
74	90-15[HB(1-4);VB:B]BP,BJR,BRR	TAZEWELL	192	63
		CONTRACT NO. 68F54		
		ILLINOIS FED. AID PROJECT		

ROUTE NO.	SECTION	COUNTY	TOTAL SHEETS	SHEET NO.
F.A.I. 74	90 (15HB-1) 1-1	TAZEWELL	101	32
FED. ROAD DIST. NO. 7		ILLINOIS	FED. AID PROJECT-	

SHEET NO. 7
29 SHEETS

STATE OF ILLINOIS
DEPARTMENT OF TRANSPORTATION

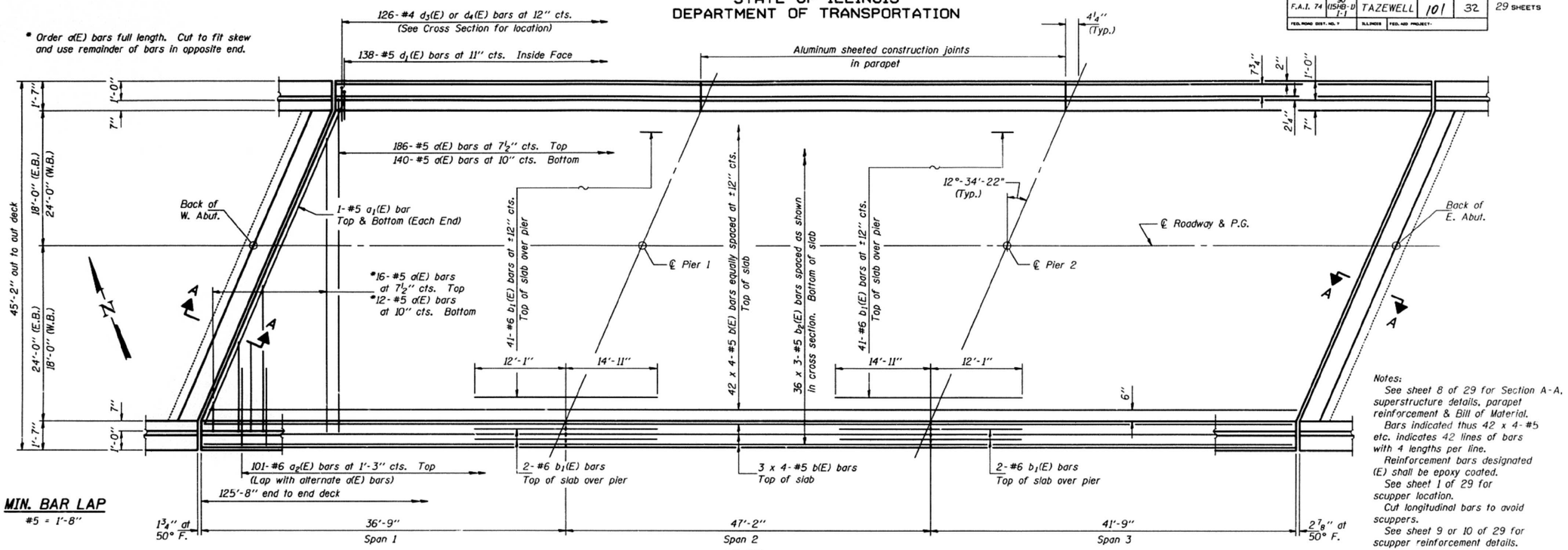

MIN. BAR LAP
#5 = 1'-8"

Notes:
See sheet 8 of 29 for Section A-A, superstructure details, parapet reinforcement & Bill of Material.
Bars indicated thus 42 x 4-#5 etc. indicates 42 lines of bars with 4 lengths per line.
Reinforcement bars designated (E) shall be epoxy coated.
See sheet 1 of 29 for scupper location.
Cut longitudinal bars to avoid scuppers.
See sheet 9 or 10 of 29 for scupper reinforcement details.

PLAN

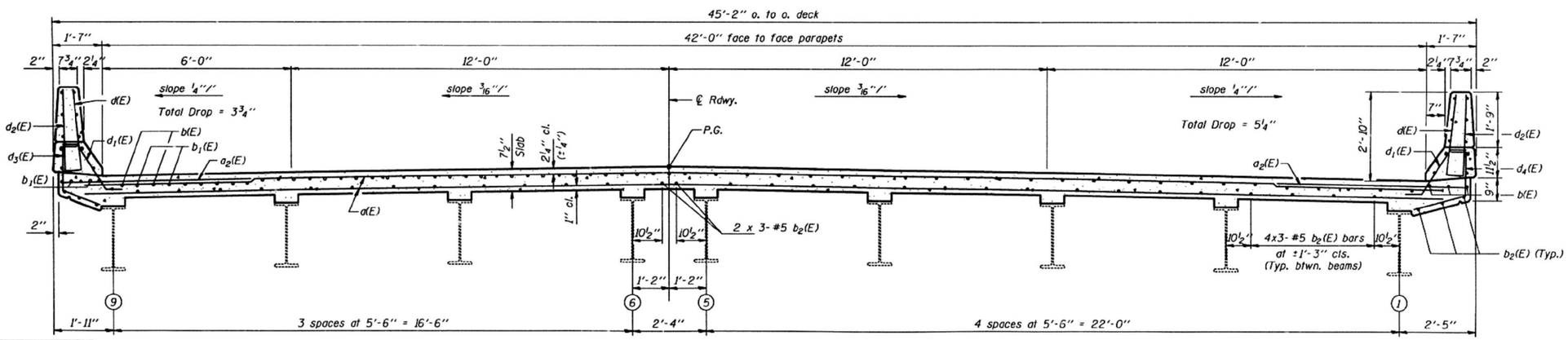

CROSS SECTION
(Looking East - E. Bound Lanes S.N. 090-0019)
(Looking West - W. Bound Lanes S.N. 090-0020)

DESIGNED	Chad Fuesting
CHECKED	Nicholas J. Sovell
DRAWN	Michael R. Gillette
CHECKED	C.J.F. N.J.S.

January 26, 2000
EXAMINED Thomas J. Domagalski — ENGINEER OF BRIDGE DESIGN
PASSED Robert E. Gudmundson — ENGINEER OF BRIDGES AND STRUCTURES

FOR INFORMATION ONLY

SUPERSTRUCTURE
F.A.I. RTE. 74 - SEC. 90(15HB-1)I-1
TAZEWELL COUNTY
STATION 634+12.35

MODEL: Default
FILE NAME: P:\2019\190388\W06 I-74 Bridge PSEs\4 CADD - DWG\4.4 Struc\0900019-0020\090001900019-0020-68F54-020_Existing Superstructure.dgn

TWM ENGINEERING GEOSPATIAL SERVICES
TWM, INC. WWW.TWM-INC.COM
IL DESIGN FIRM LICENSE NO: 184-001220

USER NAME = mjoost	DESIGNED - NP	REVISED -	
	CHECKED - CDK	REVISED -	
PLOT SCALE = 0:2.0000 ':" / in.	DRAWN - NP	REVISED -	
PLOT DATE = 12/1/2020	CHECKED - CDK	REVISED -	

STATE OF ILLINOIS
DEPARTMENT OF TRANSPORTATION

EXISTING SUPERSTRUCTURE
SN 090-0019 & 090-0020
SHEET 20 OF 37 SHEETS

F.A.I. RTE.	SECTION	COUNTY	TOTAL SHEETS	SHEET NO.
74	90-15(HB(1-4);VB;B)BP,BJR,BRR	TAZEWELL	192	64
		CONTRACT NO. 68F54		
		ILLINOIS	FED. AID PROJECT	

ROUTE NO.	SECTION	COUNTY	TOTAL SHEETS	SHEET NO.
F.A.I. 74	90 (15HB-1) I-1	TAZEWELL	101	33
FED. HIGHWAY DIST. NO. 7		ILLINOIS	FED. AID PROJECT-	

SHEET NO. 8
29 SHEETS

STATE OF ILLINOIS
DEPARTMENT OF TRANSPORTATION

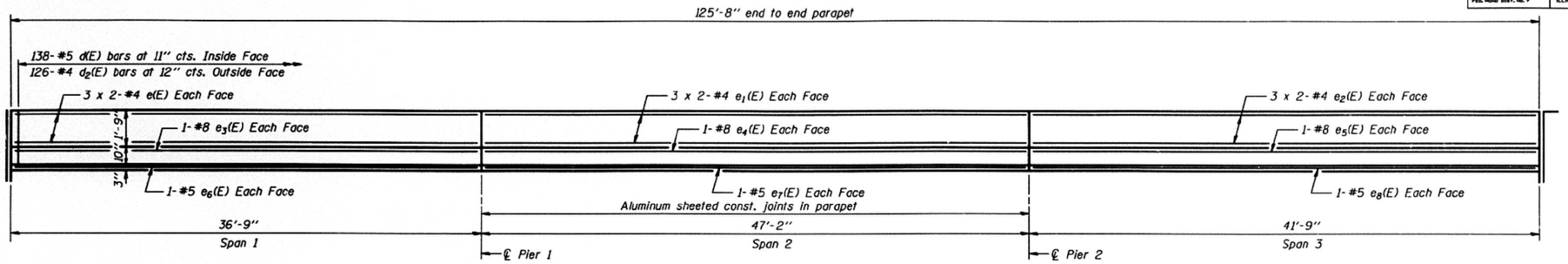

ELEVATION OF PARAPET
(Looking North)

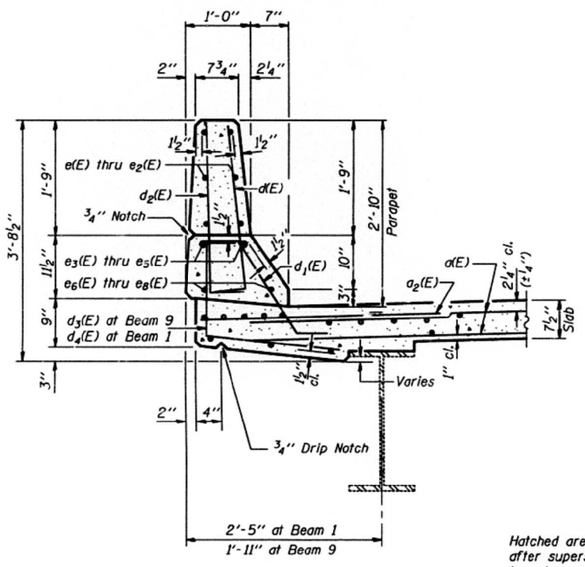

SECTION THRU PARAPET

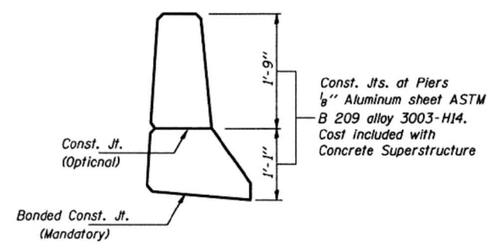

PARAPET JOINT DETAILS

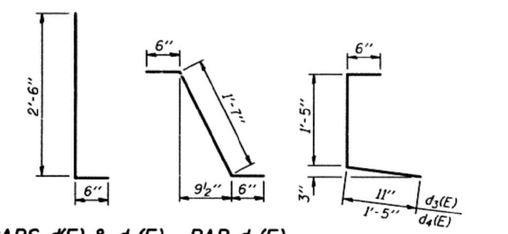

BARS d(E) & d_2(E) BAR d_1(E) BARS d_3(E) & d_4(E)

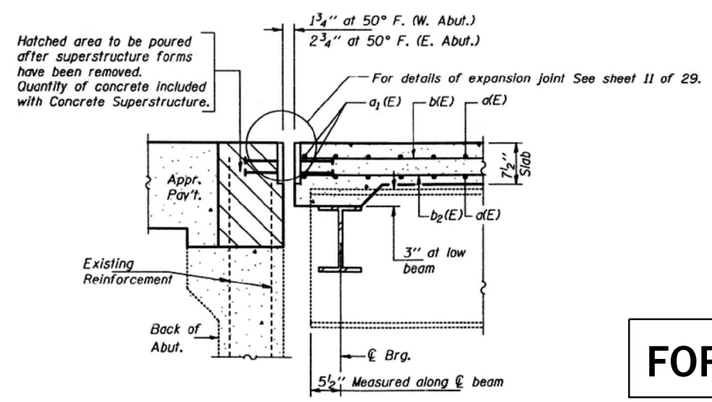

SECTION A-A

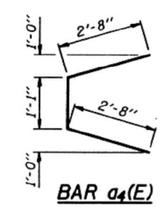

BAR a_4(E)

MIN. BAR LAPS
#4 bar = 1'-4"

TWO SUPERSTRUCTURES BILL OF MATERIAL

Bar	No.	Size	Length	Shape
a(E)	708	#5	43'-3"	
a_1(E)	8	#5	43'-5"	
a_2(E)	404	#6	4'-0"	
a_3(E)	32	#5	2'-0"	
a_4(E)	4	#5	6'-5"	
b(E)	384	#5	32'-8"	
b_1(E)	180	#6	27'-0"	
b_2(E)	216	#5	42'-11"	
d(E)	552	#5	3'-0"	
d_1(E)	552	#5	2'-7"	
d_2(E)	504	#4	3'-0"	
d_3(E)	252	#4	2'-10"	
d_4(E)	252	#4	3'-4"	
e(E)	43	#4	18'-11"	
e_1(E)	48	#4	24'-1"	
e_2(E)	48	#4	21'-5"	
e_3(E)	8	#8	36'-6"	
e_4(E)	8	#8	46'-11"	
e_5(E)	8	#8	41'-6"	
e_6(E)	8	#5	36'-6"	
e_7(E)	8	#5	46'-11"	
e_8(E)	8	#5	41'-6"	
Reinforcement Bars, Epoxy Coated			Pound	75910
Concrete Superstructure			Cu. Yds.	354.5

Reinforcement bars designated (E) shall be epoxy coated.
Bars indicated thus 42 x 4-#5 etc. indicates 42 line of bars with 4 lengths per line.

DESIGNED	Chad Fuesting	
CHECKED	Nicholas J. Sovell	
DRAWN	Michael R. Gillette	
CHECKED	C.J.F.	N.J.S.

January 26, 2000
EXAMINED Thomas J. Domagalski — ENGINEER OF BRIDGE DESIGN
PASSED Robert E. Gubbins — ENGINEER OF BRIDGES AND STRUCTURES

S-2-D 4-30-99

FOR INFORMATION ONLY

SUPERSTRUCTURE DETAILS
F.A.I. RTE. 74 - SEC. 90(15HB-1)I-1
TAZEWELL COUNTY
STATION 634+12.35

MODEL: Default
FILE NAME: P:\2019\190388\WO6 I-74 Bridge PSEs\4 CADD - DWG\4.4 Struc\0900019-0020\0900019-0020-68F54-021 Existing Superstructure Details.dgn

TWM ENGINEERING & GEOSPATIAL SERVICES
TWM, INC.
WWW.TWM-INC.COM
IL DESIGN FIRM LICENSE NO: 184-001220

USER NAME = mjoost	DESIGNED - NP	REVISED -	
	CHECKED - ALN	REVISED -	
PLOT SCALE = 0:2.0000 ':' / in.	DRAWN - NP	REVISED -	
PLOT DATE = 12/1/2020	CHECKED - ALN	REVISED -	

STATE OF ILLINOIS
DEPARTMENT OF TRANSPORTATION

EXISTING SUPERSTRUCTURE DETAILS
SN 090-0019 & 090-0020
SHEET 21 OF 37 SHEETS

F.A.I. RTE.	SECTION	COUNTY	TOTAL SHEETS	SHEET NO.
74	90-15[HB(1-4);VB;B]BP,BJR,BRR	TAZEWELL	192	65
		CONTRACT NO. 68F54		
		ILLINOIS	FED. AID PROJECT	

STATE OF ILLINOIS
DEPARTMENT OF TRANSPORTATION

ROUTE NO.	SECTION	COUNTY	TOTAL SHEETS	SHEET NO.
F.A.I. 74	90 (15HB-1) I-1	TAZEWELL	101	34
FED. ROAD DIST. NO. 7	ILLINOIS	FED. AID PROJECT-		

SHEET NO. 9
29 SHEETS

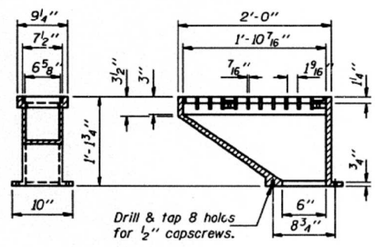

DRAINAGE SCUPPER DS-12

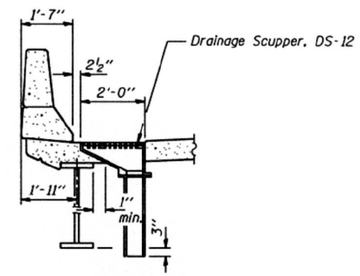

SECTION A-A

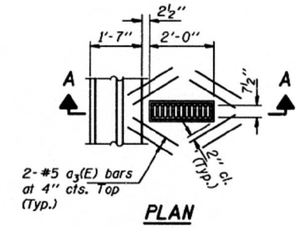

PLAN

Note: Reinforcement bars designated (E) shall be epoxy coated.
Cut longitudinal reinforcement to clear drainage scuppers.
Bars billed with Bill of Material shown on sheet 8 of 29.

Notes:
All cast iron parts shall be gray iron conforming to the requirements of AASHTO M 105, Class 35B.
Bolts and nuts shall conform to the requirements of ASTM A 307.
All bolts and washers shall be galvanized according to AASHTO M 232.
As an alternate bolts and washers may be stainless steel conforming to the requirements of ASTM A 193M, Type 304.
Cost of the grate, frame, downspout, bolts and washers including complete installation of the scupper will be paid for at the unit bid price each for Drainage Scuppers.
Structural steel weldments of equal sections may be substituted for cast iron. Details shall be submitted to the Engineer for approval.

DESIGNED	Chad Fuesting
CHECKED	Nicholas J. Sovell
DRAWN	Michael R. Gillette
CHECKED	C.J.F. N.J.S.

January 26, 2000
EXAMINED Thomas J. Domagalski
ENGINEER OF BRIDGE DESIGN
PASSED Robert F. Anderson
ENGINEER OF BRIDGES AND STRUCTURES

FOR INFORMATION ONLY

DRAINAGE SCUPPER DETAILS (DS-12)
NORTH PARAPET EAST BOUND LANES
SOUTH PARAPET WEST BOUND LANES
F.A.I. RTE. 74 - SEC. 90(15HB-1)I-1
TAZEWELL COUNTY
STATION 634+12.35

MODEL: Default
FILE NAME: P:\2019\190388\WO6 I-74 Bridge PSEs\4 CADD - DWGs\4.4 Struc\0900019-0020\0900019-0020-68F54-022 Existing Drainage Scupper Details.dgn

TWM ENGINEERING & GEOSPATIAL SERVICES
TWM, INC.
WWW.TWM-INC.COM
IL DESIGN FIRM LICENSE NO: 184-001220

USER NAME = mjoost	DESIGNED - NP	REVISED -
	CHECKED - ALN	REVISED -
PLOT SCALE = 0:2.0000 ':' / in.	DRAWN - NP	REVISED -
PLOT DATE = 12/1/2020	CHECKED - ALN	REVISED -

STATE OF ILLINOIS
DEPARTMENT OF TRANSPORTATION

EXISTING DRAINAGE SCUPPER DETAILS
SN 090-0019 & 090-0020
SHEET 22 OF 37 SHEETS

F.A.I. RTE.	SECTION	COUNTY	TOTAL SHEETS	SHEET NO.
74	90-15[HB(1-4);VB;B]BP,BJR,BRR	TAZEWELL	192	66
		CONTRACT NO. 68F54		
		ILLINOIS	FED. AID PROJECT	

STATE OF ILLINOIS
DEPARTMENT OF TRANSPORTATION

ROUTE NO.	SECTION	COUNTY	TOTAL SHEETS	SHEET NO.
F.A.I. 74	90 (15HB-1) I-1	TAZEWELL	102	35
FED. ROAD DIST. NO. 7		ILLINOIS	FED. AID PROJECT-	

SHEET NO. 10
29 SHEETS

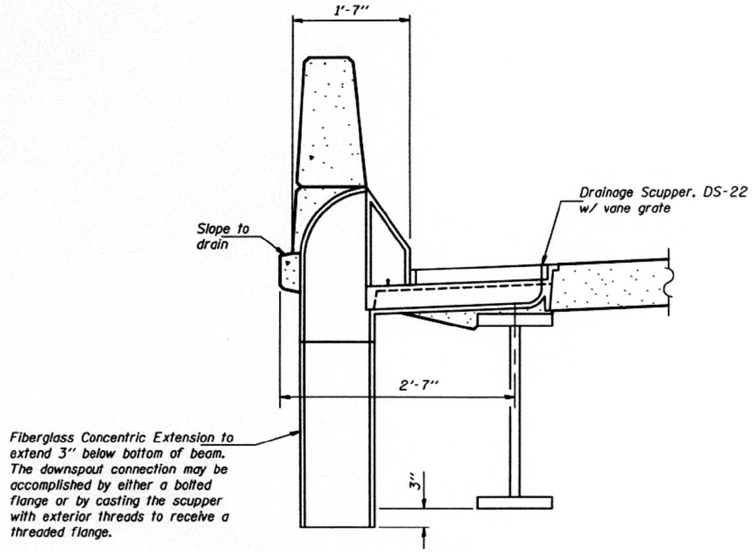

SECTION A-A

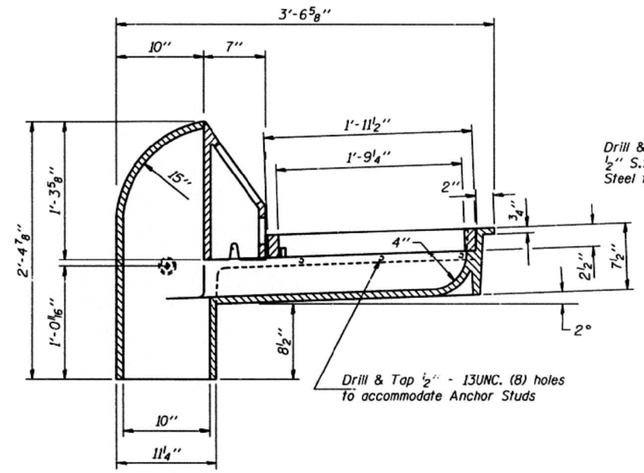

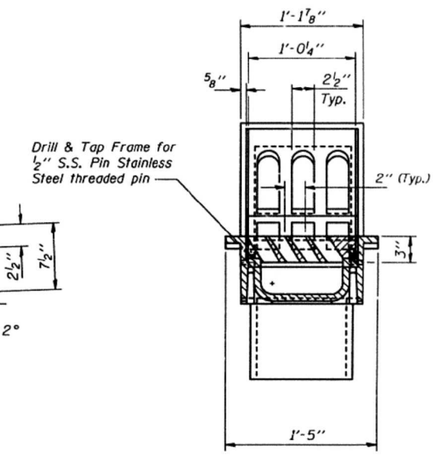

DRAINAGE SCUPPER DETAIL

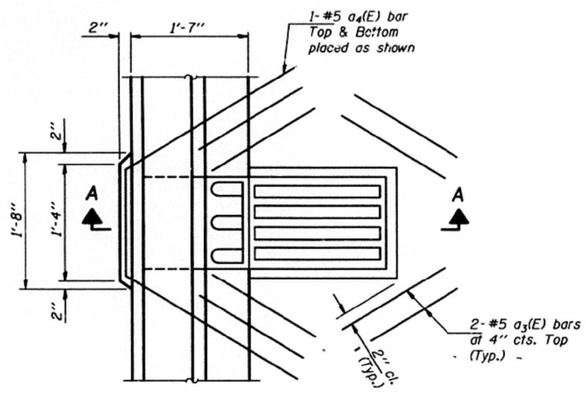

PLAN

Note: Reinforcement bars designated (E) shall be epoxy coated.
Cut longitudinal reinforcement to clear drainage scuppers.
Bars billed with Bill of Material shown on sheet 8 of 29.

Notes:
All cast iron parts shall be gray iron conforming to the requirements of AASHTO M 105, Class 35B.
Bolts and nuts shall conform to the requirements of ASTM A 307.
All bolts and washers shall be galvanized according to AASHTO M 232.
As an alternate bolts and washers may be stainless steel conforming to the requirements of ASTM A 193M, Type 304.
Cost of the grate, frame, downspout, bolts and washers including complete installation of the scupper will be paid for at the unit bid price each for Drainage Scuppers.
Structural steel weldments of equal sections may be substituted for cast iron. Details shall be submitted to the Engineer for approval.

DESIGNED	Chad Fuesting
CHECKED	Nicholas J. Sorrell
DRAWN	Michael R. Gillette
CHECKED	C.J.F. N.J.S.

January 26, 2000
EXAMINED Thomas J. Domagalski
ENGINEER OF BRIDGE DESIGN
PASSED Ralph E. Anderson
ENGINEER OF BRIDGES AND STRUCTURES

FOR INFORMATION ONLY

DRAINAGE SCUPPER DETAILS (DS-22)
SOUTH PARAPET EAST BOUND LANES
NORTH PARAPET WEST BOUND LANES
F.A.I. RTE. 74 - SEC. 90(15HB-1)I-1
TAZEWELL COUNTY
STATION 634+12.35

MODEL: Default
FILE NAME: P:\2019\190388\W06 F-74 Bridge PSE\v4 CADD - DWG\4.4 Struc\09900019-0020\0900019-0020-68F54-023_Existing Drainage Scupper Details.dgn

TWM ENGINEERING GEOSPATIAL SERVICES	TWM, INC. WWW.TWM-INC.COM	USER NAME = mjoost	DESIGNED - NP	REVISED -
	IL DESIGN FIRM LICENSE NO: 184-001220		CHECKED - ALN	REVISED -
		PLOT SCALE = 0:2.0000 ':" / in.	DRAWN - NP	REVISED -
		PLOT DATE = 12/1/2020	CHECKED - ALN	REVISED -

STATE OF ILLINOIS
DEPARTMENT OF TRANSPORTATION

EXISTING DRAINAGE SCUPPER DETAILS
SN 090-0019 & 090-0020
SHEET 23 OF 37 SHEETS

F.A.I. RTE.	SECTION	COUNTY	TOTAL SHEETS	SHEET NO.
74	90-15[HB(1-4);VB;B]BP,BJR,BRR	TAZEWELL	192	67
		CONTRACT NO. 68F54		
		ILLINOIS	FED. AID PROJECT	

STATE OF ILLINOIS
DEPARTMENT OF TRANSPORTATION

ROUTE NO.	SECTION	COUNTY	TOTAL SHEETS	SHEET NO.
F.A.I. 74	90 (15HB-1) I-1	TAZEWELL	101	36
FED. ROAD DIST. NO. 7	ILLINOIS	FED. AID PROJECT-		

SHEET NO. 11
29 SHEETS

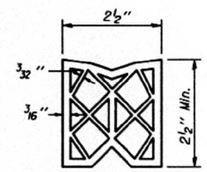

PREFORMED JOINT SEAL (2½")

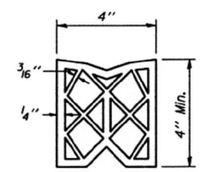

PREFORMED JOINT SEAL (4")

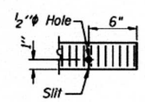

SEAL CUT-OUT (2½")

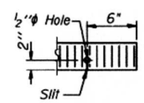

SEAL CUT-OUT (4")

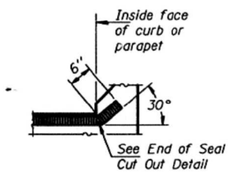

END OF SEAL

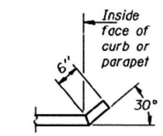

END OF PLATE

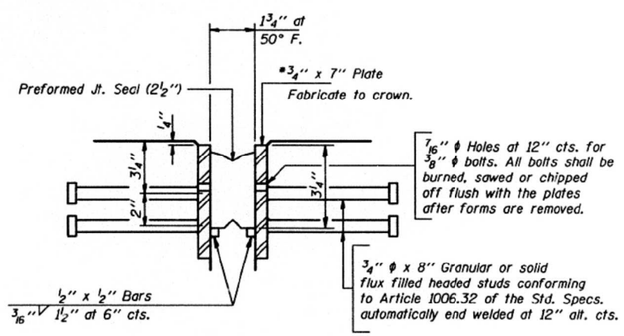

DETAIL A
(West Abutment)

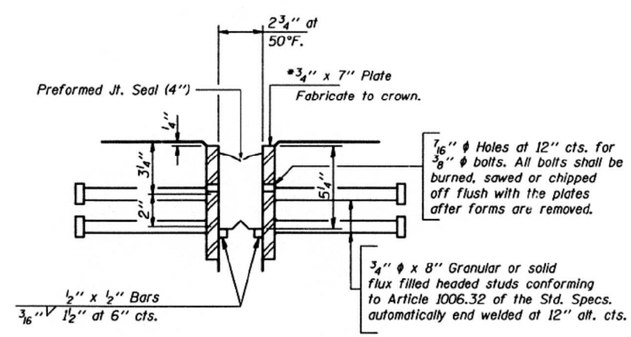

DETAIL B
(East Abutment)

Note:
After fabrication all surfaces of the steel plates shall be given one shop coat of the paint specified for structural steel. No field painting required.

* Furnish in segments of 20 ft. maximum length. Maximum space between installed segments shall be 3/16". Seal space with Silicone Sealant suitable for Structural Steel.

DESIGNED	Chad Fuesting
CHECKED	Nicholas J. Sovell
DRAWN	Michael R. Gillette
CHECKED	C.J.F. N.J.S.

January 26, 2000
EXAMINED Thomas J. Domagalski
ENGINEER OF BRIDGE DESIGN
PASSED Ralph E. Anderson
ENGINEER OF BRIDGES AND STRUCTURES

FOR INFORMATION ONLY

PREFORMED JOINT SEAL DETAILS
F.A.I. RTE. 74 - SEC. 90(15HB-1)I-1
TAZEWELL COUNTY
STATION 634+12.35

MODEL: Default
FILE NAME: P:\2019\190388\WO6 I-74 Bridge PSEs\4 CADD - DWG\4.4 Struc\0900019-0020\0900019-0020-68F54-024 Existing Preformed Joint Seal Details.dgn

TWM ENGINEERING & GEOSPATIAL SERVICES
TWM, INC.
WWW.TWM-INC.COM
IL DESIGN FIRM LICENSE NO: 184-001220

USER NAME = mjoost	DESIGNED - NP	REVISED -
	CHECKED - ALN	REVISED -
PLOT SCALE = 0:2.0000 ':' / in.	DRAWN - NP	REVISED -
PLOT DATE = 12/1/2020	CHECKED - ALN	REVISED -

STATE OF ILLINOIS
DEPARTMENT OF TRANSPORTATION

EXISTING PREFORMED JOINT SEAL DETAILS
SN 090-0019 & 090-0020
SHEET 24 OF 37 SHEETS

F.A.I. RTE.	SECTION	COUNTY	TOTAL SHEETS	SHEET NO.
74	90-15[HB(1-4);VB;B]BP,BJR,BRR	TAZEWELL	192	68
		CONTRACT NO. 68F54		
		ILLINOIS	FED. AID PROJECT	

STATE OF ILLINOIS
DEPARTMENT OF TRANSPORTATION

ROUTE NO.	SECTION	COUNTY	TOTAL SHEETS	SHEET NO.
F.A.I. 74	90 (15HB-1) I-1	TAZEWELL	101	37
FED. ROAD DIST. NO. 7	ILLINOIS	FED. AID PROJECT-		

SHEET NO. 12
29 SHEETS

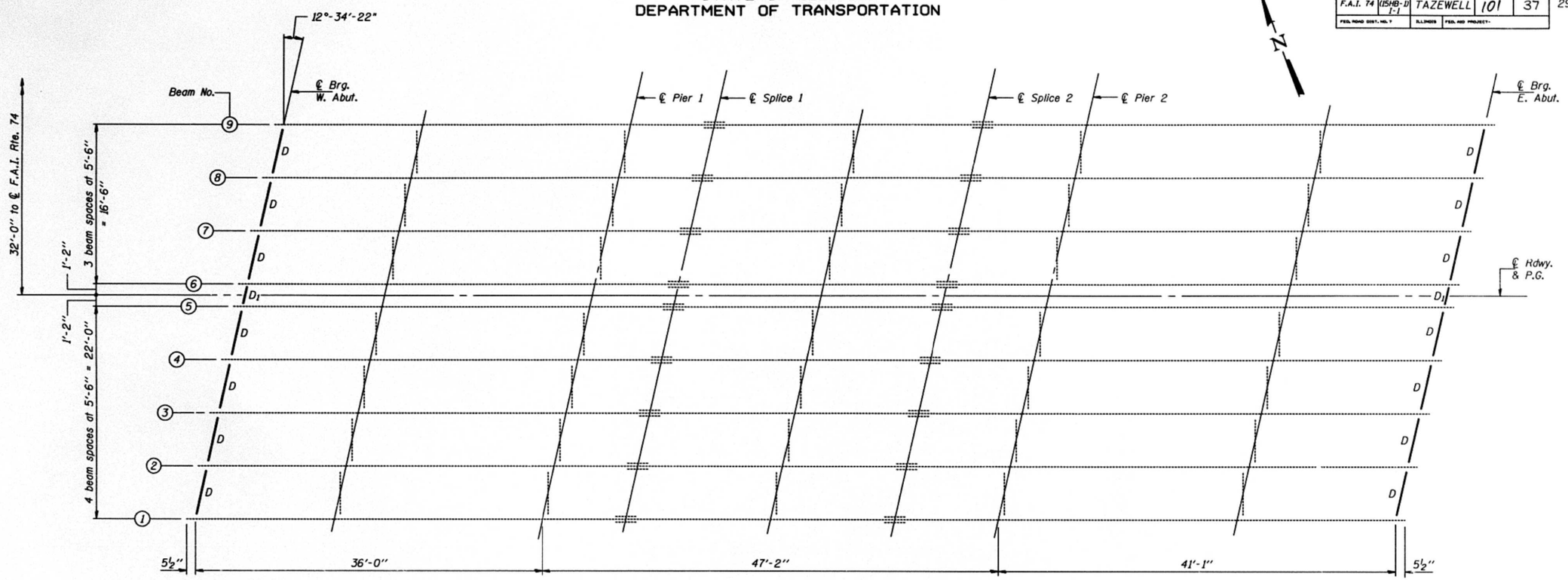

FRAMING PLAN - EAST BOUND

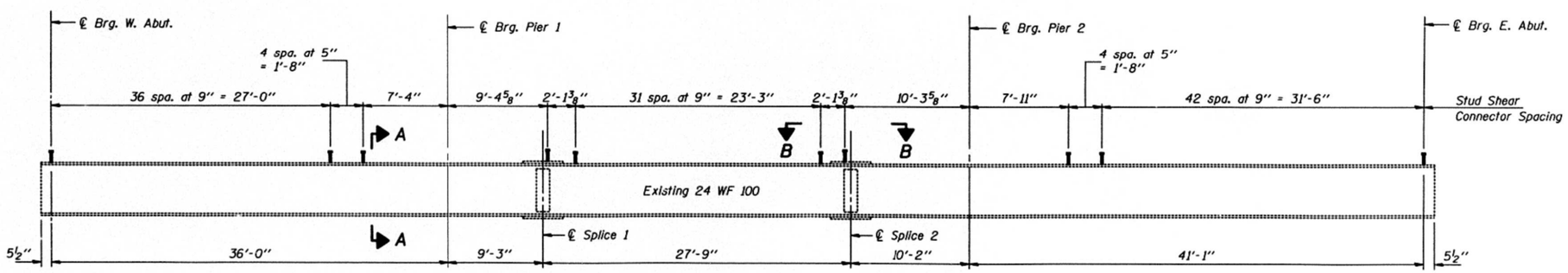

BEAM ELEVATION
(Showing Shear Stud Layout)

DESIGNED	Chad Fuesting
CHECKED	Nicholas J. Sovell
DRAWN	Michael R. Gillette
CHECKED	C.J.F. N.J.S.

January 26, 2000
EXAMINED Thomas J. Domagalski
ENGINEER OF BRIDGE DESIGN
PASSED Robert E. Gudauskas
ENGINEER OF BRIDGES AND STRUCTURES

FOR INFORMATION ONLY

Notes:
See sheet 13 of 29 for Section A-A and View B-B.
Existing end diaphragms, angles, bolts and rivets to be removed as indicated. Cost included with Structural Steel Removal.

STRUCTURAL STEEL DETAILS
F.A.I. RTE. 74 - SEC. 90(15HB-1)I-1
TAZEWELL COUNTY
STATION 634+12.35

MODEL: Default
FILE NAME: P:\2019\190388\W06 I-74 Bridge PSEs\4 CADD - DWG\4.4 Struc\0900019-0020\0900019-0020-68F54-025_Existing Structural Steel Details.dgn

TWM ENGINEERING GEOSPATIAL SERVICES
TWM, INC.
WWW.TWM-INC.COM
IL DESIGN FIRM LICENSE NO: 184-001220

USER NAME = mjoost	DESIGNED - NP	REVISED -
	CHECKED - ALN	REVISED -
PLOT SCALE = 0:2.0000 ':' / in.	DRAWN - NP	REVISED -
PLOT DATE = 12/1/2020	CHECKED - ALN	REVISED -

STATE OF ILLINOIS
DEPARTMENT OF TRANSPORTATION

EXISTING STRUCTURAL STEEL DETAILS
SN 090-0019 & 090-0020
SHEET 25 OF 37 SHEETS

F.A.I. RTE.	SECTION	COUNTY	TOTAL SHEETS	SHEET NO.
74	90-15[HB(1-4);VB;B]BP,BJR,BRR	TAZEWELL	192	69
		CONTRACT NO. 68F54		
		ILLINOIS	FED. AID PROJECT	

STATE OF ILLINOIS
DEPARTMENT OF TRANSPORTATION

ROUTE NO.	SECTION	COUNTY	TOTAL SHEETS	SHEET NO.
F.A.I. 74	90 (15HB-1) I-1	TAZEWELL	101	38
FED. ROAD DIST. NO. 7	ILLINOIS	FED. AID PROJECT-		

SHEET NO. 13
29 SHEETS

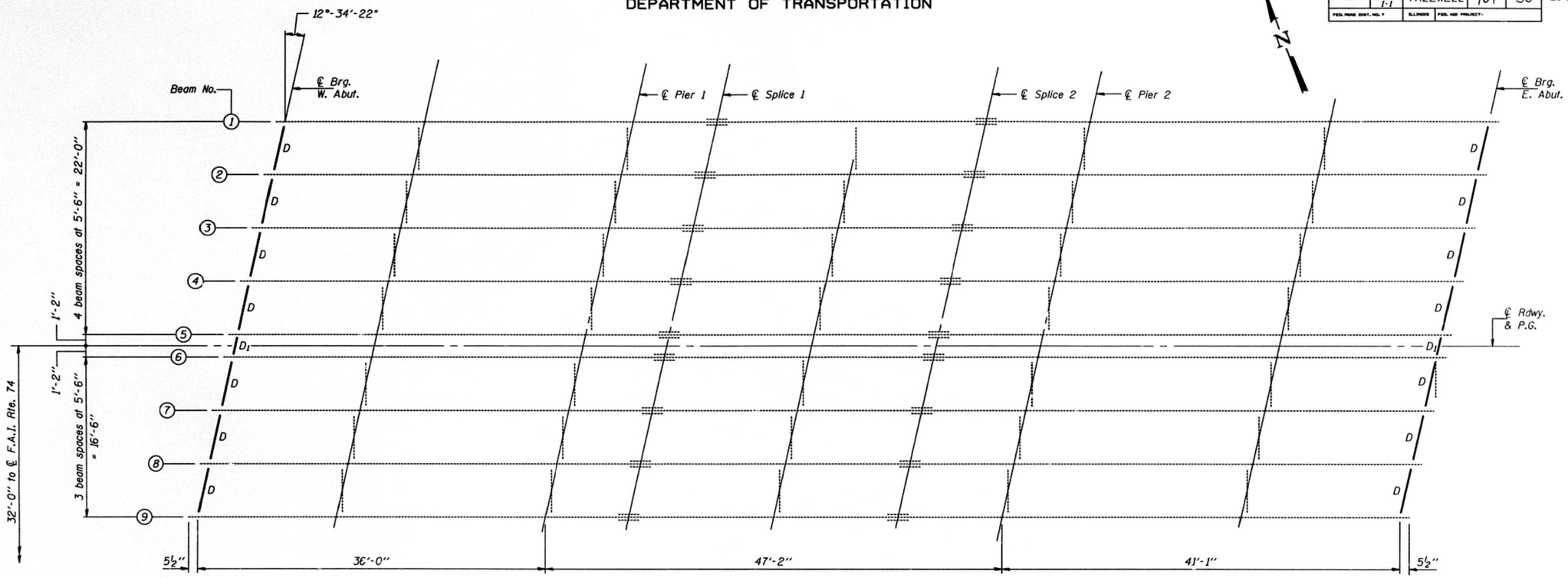

FRAMING PLAN - WEST BOUND

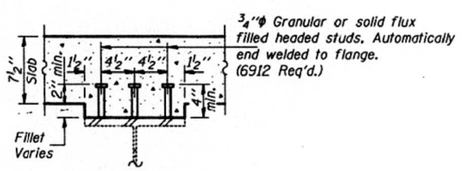

SECTION A-A

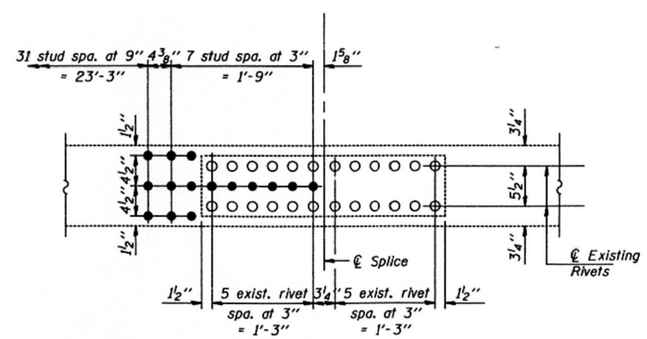

VIEW B-B

Note:
Splice 2 shown. Splice 1 similar by 180° rotation.

DESIGNED	Chad Fuesting
CHECKED	Nicholas J. Sovell
DRAWN	Michael R. Gillette
CHECKED	C.J.F. N.J.S.

January 26, 2000
EXAMINED Thomas J. Domagalski — ENGINEER OF BRIDGE DESIGN
PASSED Robert E. Gudauskas — ENGINEER OF BRIDGES AND STRUCTURES

FOR INFORMATION ONLY

STRUCTURAL STEEL DETAILS
F.A.I. RTE. 74 - SEC. 90(15HB-1)I-1
TAZEWELL COUNTY
STATION 634+12.35

MODEL: Default
FILE NAME: P:\2019\190388\WO6 I-74 Bridge PSEs\4 CADD - DWG\4-4 Struc\090001 9-0020\090001 9-0020-68F54-026 Existing Structural Steel Details.dgn

TWM ENGINEERING GEOSPATIAL SERVICES
TWM, INC.
WWW.TWM-INC.COM
IL DESIGN FIRM LICENSE NO: 184-001220

USER NAME = mjoost	DESIGNED - NP	REVISED -	
	CHECKED - ALN	REVISED -	
PLOT SCALE = 0:2.0000 ':" / in.	DRAWN - NP	REVISED -	
PLOT DATE = 12/1/2020	CHECKED - ALN	REVISED -	

STATE OF ILLINOIS
DEPARTMENT OF TRANSPORTATION

EXISTING STRUCTURAL STEEL DETAILS
SN 090-0019 & 090-0020
SHEET 26 OF 37 SHEETS

F.A.I. RTE.	SECTION	COUNTY	TOTAL SHEETS	SHEET NO.
74	90-15[HB(1-4);VB;B]BP,BJR,BRR	TAZEWELL	192	70
		CONTRACT NO. 68F54		
	ILLINOIS	FED. AID PROJECT		

ROUTE NO.	SECTION	COUNTY	TOTAL SHEETS	SHEET NO.
F.A.I. 74	90 (15HB-1) I-1	TAZEWELL	101	39
FED. ROAD DIST. NO. 7	ILLINOIS	FED. AID PROJECT-		

SHEET NO. 14
29 SHEETS

STATE OF ILLINOIS
DEPARTMENT OF TRANSPORTATION

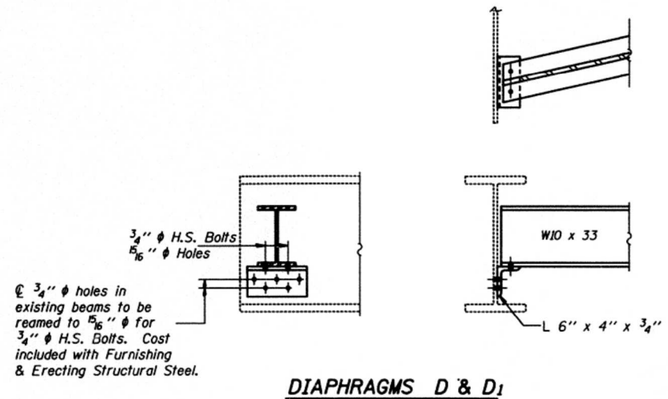

DIAPHRAGMS D & D1

D - 28 Required
D1 - 4 Required

INTERIOR BEAM MOMENT TABLE						
		0.4 Sp. 1	Pier 1	0.5 Span 2	Pier 2	0.6 Span 3
Is	(in4)	2981	2981	2981	2981	2981
Ic (n)	(in4)	8297	—	8297	—	8297
Ic (3n)	(in4)	6049	—	6049	—	6049
Ss	(in3)	248	248	248	248	248
Sc (n)	(in3)	367	—	367	—	367
Sc (3n)	(in3)	332	—	332	—	332
Z	(in3)	—	279	—	279	—
w	(k/ft.)	0.663	0.754	0.663	0.754	0.663
Mℓ	('k)	58	125	61	147	81
sℓ	(k/ft.)	0.091	—	0.091	—	0.091
Msℓ	('k)	9	—	12	—	13
Mt	('k)	162	97	199	103	200
M (Imp)	('k)	49	29	60	31	61
5/3[Mt+M(Imp)]	('k)	352	210	432	223	435
Ma	('k)	545	436	656	481	687
Mu	('k)	1410	768	1410	768	1410
fsℓ non-comp	(k.s.i.)	2.8	6.0	2.9	7.1	3.9
fsℓ (comp)	(k.s.i.)	0.3	—	0.4	—	0.5
fs 5/3 (t+Imp)	(k.s.i.)	11.5	10.2	14.1	10.8	14.2
fs (Overload)	(k.s.i.)	14.6	16.2	17.4	17.9	18.6
fs (Total)	(k.s.i.)	—	—	—	—	—
VR	(k)	32.7	—	36.3	—	34.2

INTERIOR BEAM REACTION TABLE					
		W. Abut.	Pier 1	Pier 2	E. Abut.
Rℓ	(k)	10.1	34.4	37.3	11.9
Rt	(k)	25.6	32.5	32.7	26.8
Imp.	(k)	7.7	9.8	9.8	8.0
R (Total)	(k)	43.4	76.7	79.8	46.7

Notes: Two hardened washers shall be required over all oversized holes for diaphragms.

New 3/4" ϕ H.S. Bolts in 15/16" ϕ holes shall be used for all diaphragm connections.

Cost of field drilling or reaming of holes is included with Furnishing and Erecting Structural Steel.

Is and Ss are the moment of inertia and section modulus of the steel section used in computing fs (Total & Overload).

Ic(n) and Sc(n) are the moment of inertic and section modulus of the composite section used in computing stresses due to Live Load.

Ic(3n) and Sc(3n) are the moment of inertia and section modulus of the composite section used in computing stresses due to superimposed dead loads.

VR is the maximum Live Load + Impact shear range in span.

Z is the plastic section modulus used to determine the fully plastic moments in the non-composite areas.

Ma (Applied Moment)=1.3[Mℓ + Msℓ + 5/3(Mt + M(Imp))].

The Plastic Moment capacity (Mu) is computed according to AASHTO 10.48.1 and 10.50.1.1.

fs (Overload) is the sum of the stresses due to Mℓ + Msℓ + 5/3(Mt + M(Imp)).

fs (Total) (Non-compact section) is the sum of the stresses due to 1.3[Mℓ + Msℓ + 5/3(Mt + M(Imp))].

FOR INFORMATION ONLY

DESIGNED	Chad Fuesting
CHECKED	Nicholas J. Sorell
DRAWN	Michael R. Gillette
CHECKED	C.J.F. N.J.S.

January 26, 2000
EXAMINED Thomas J. Domagalski — ENGINEER OF BRIDGE DESIGN
PASSED Ralph E. Anderson — ENGINEER OF BRIDGES AND STRUCTURES

STRUCTURAL STEEL DETAILS
F.A.I. RTE. 74 - SEC. 90(15HB-1)I-1
TAZEWELL COUNTY
STATION 634+12.35

STATE OF ILLINOIS
DEPARTMENT OF TRANSPORTATION

ROUTE NO.	SECTION	COUNTY	TOTAL SHEETS	SHEET NO.
F.A.I. 74	90 (15HB-1) I-1	TAZEWELL	101	40
FED. ROAD DIST. NO. 7	ILLINOIS	FED. AID PROJECT-		

SHEET NO. 15
29 SHEETS

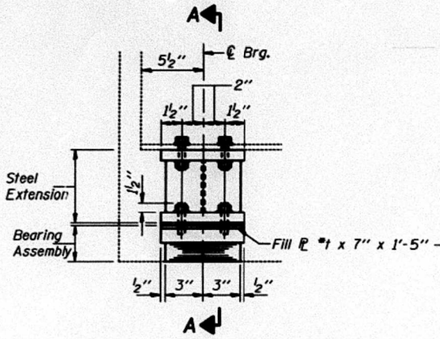

ELEVATION AT WEST ABUT.

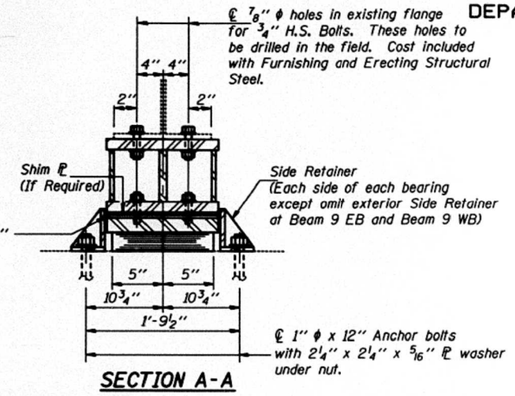

SECTION A-A

TYPE I ELASTOMERIC EXP. BRG.

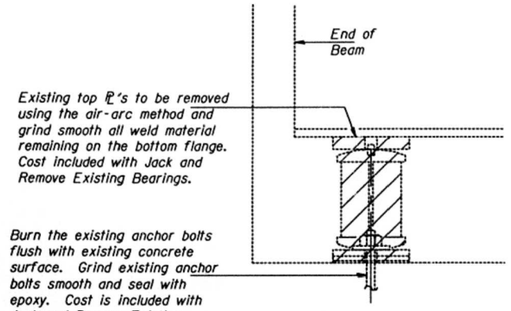

JACK AND REMOVE EXISTING BEARING PROCEDURE

1. The Contractor shall submit for approval by the Engineer, plans for lifting existing beams and installing new bearings prior to commencing any related work. This work shall be done after existing concrete deck is removed and prior to pouring of the new concrete deck. The maximum dead load reaction per beam (weight of steel only) is 1.6ᵏ. Min. jack capacity shall be 3.2ᵏ.
2. Prior to ordering any material, the Contractor shall verify steel extension and shim plate thicknesses required at each bearing.
3. The bottom flange of the existing beam shall be cleaned as specified for Structural Steel.
4. The new bearings and steel extensions shall be in place and the jacks shall be lowered before the new concrete deck is poured.

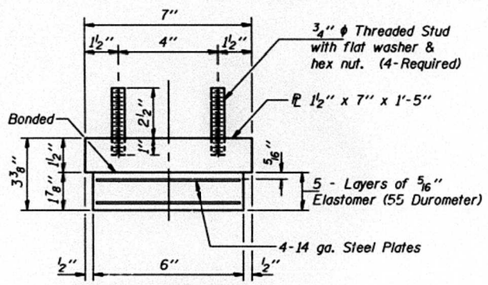

BEARING ASSEMBLY

*FILL PLATE THICKNESS (t)

BEAM	EB	WB
4	—	1"
5	—	1"
6	½"	1"
7	—	¾"

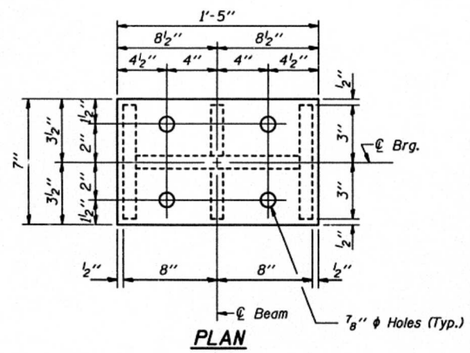

PLAN

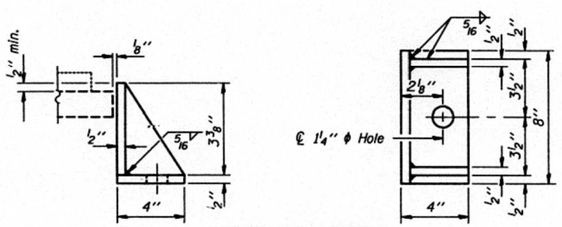

SIDE RETAINER

Equivalent rolled angle with stiffeners will be allowed in lieu of welded plates. Weight included with Furnishing and Erecting Structural Steel.

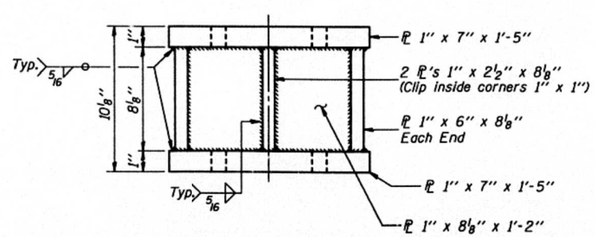

STEEL EXTENSION AT WEST ABUT.

FOR INFORMATION ONLY

Notes:
For anchor bolt installation details see sheet 18 of 29.
Shim plates shall not be placed under Bearing Assembly.
New steel extensions, side retainers, connection bolts, fill plates, shim plates and anchor bolts are included with Furnishing and Erecting Structural Steel.

BILL OF MATERIAL

Item	Unit	Total
Jack and Remove Existing Bearings	Each	18
Elastomeric Bearing Assembly, Type I	Each	18

DESIGNED	Chad Fuesting
CHECKED	Nicholas J. Sovell
DRAWN	Michael R. Gillette
CHECKED	C.J.F. N.J.S.

January 26, 2000
EXAMINED Thomas J. Domagalski, ENGINEER OF BRIDGE DESIGN
PASSED Ralph E. Anderson, ENGINEER OF BRIDGES AND STRUCTURES

BEARING DETAILS AT WEST ABUTMENT
F.A.I. RTE. 74 - SEC. 90(15HB-1)I-1
TAZEWELL COUNTY
STATION 634+12.35

ROUTE NO.	SECTION	COUNTY	TOTAL SHEETS	SHEET NO.
F.A.I. 74	90 (15HB-1) I-1	TAZEWELL	101	41
FED. ROAD DIST. NO. 7	ILLINOIS	FED. AID PROJECT-		

SHEET NO. 16
29 SHEETS

STATE OF ILLINOIS
DEPARTMENT OF TRANSPORTATION

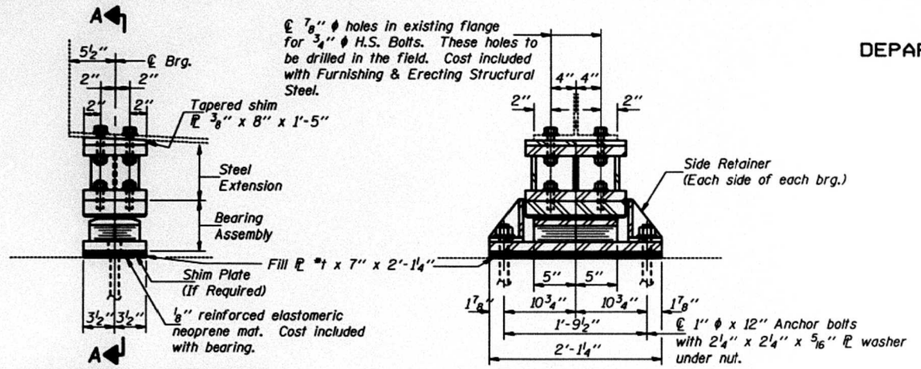

ELEVATION AT EAST ABUT.

SECTION A-A

TYPE II ELASTOMERIC EXP. BRG.
(At Beams 1 thru 8 EB & WB)

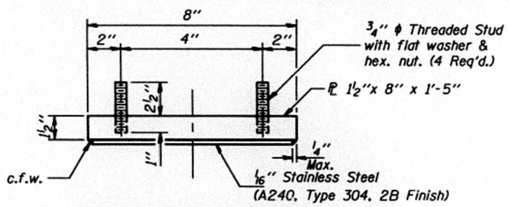

TOP BEARING ASSEMBLY

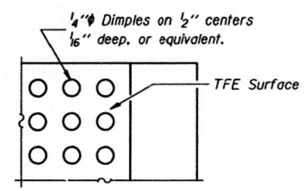

PLAN-TFE SURFACE

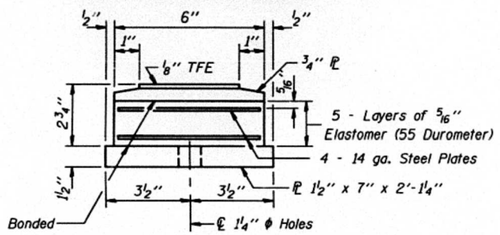

BOTTOM BEARING ASSEMBLY

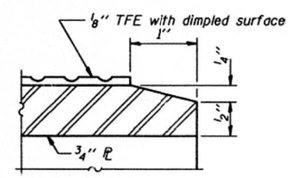

SECTION THRU TFE

Notes:
See sheet 18 of 29 for Anchor Bolt Installation.
For Jack and Remove Existing Bearing Procedure, see sheet 15 of 29.
New steel extensions, side retainers, connection bolts, fill plates, shim plates and anchor bolts are included with Furnishing and Erecting Structural Steel.

*FILL PLATE THICKNESS (t)

BEAM	EB	WB
2	1⅛"	—
3	1"	⅝"
4	1⅜"	1⅛"
5	1¾"	2¼"
6	1¾"	2¼"
7	1⅛"	1½"

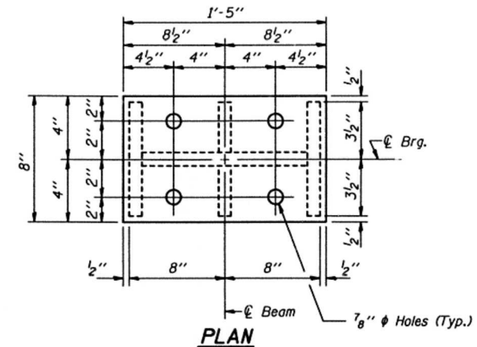

PLAN

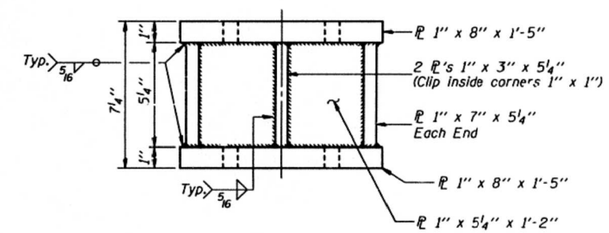

STEEL EXTENSION AT EAST ABUT.

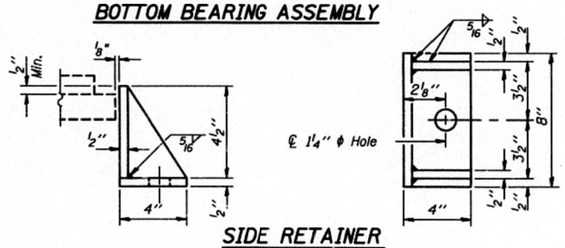

SIDE RETAINER

Equivalent rolled angle with stiffeners will be allowed in lieu of welded plates. Weight included with Structural Steel.

Note: The ⅛" TFE sheet shall be bonded directly to the top steel plate with a two-component, medium viscosity epoxy resin, conforming to the requirements of the Federal Specification MMM-A-134, Type I. The bond agent shall be applied on the full area of the contact surfaces.

Bonding of ⅛" TFE sheet during vulcanizing process will be permitted provided the process and method of adjusting assembly height is approved by the Engineer.

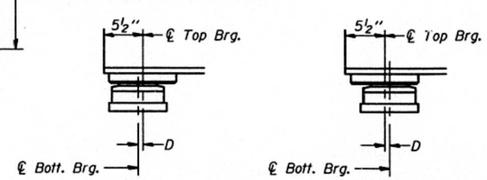

BELOW 50°F.
(Move bott. brg. away from fixed brg.)

ABOVE 50°F.
(Move bott. brg. toward fixed brg.)

SETTING ANCHOR BOLTS AT EXP. BRG.

D=⅛" per each 100' of expansion for every 15° temp. change from the normal temp. of 50°F.

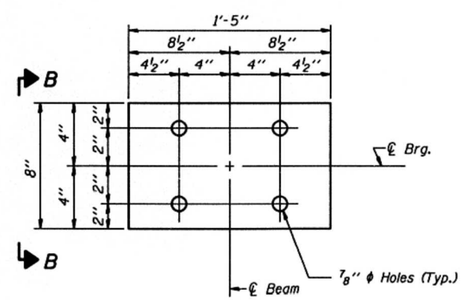

PLAN

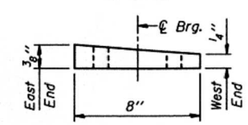

VIEW B-B

BILL OF MATERIAL

Item	Unit	Total
Jack and Remove Existing Bearings	Each	16
Elastomeric Bearing Assembly, Type II	Each	16

FOR INFORMATION ONLY

BEARING DETAILS AT EAST ABUTMENT
F.A.I. RTE. 74 - SEC. 90(15HB-1)I-1
TAZEWELL COUNTY
STATION 634+12.35

DESIGNED	Chad Fuesting	January 26, 2000	
CHECKED	Nicholas J. Snvell	EXAMINED	ENGINEER OF BRIDGE DESIGN
DRAWN	Michael R. Gillette	PASSED	ENGINEER OF BRIDGES AND STRUCTURES
CHECKED	C.J.F. N.J.S.		

STATE OF ILLINOIS
DEPARTMENT OF TRANSPORTATION

ROUTE NO.	SECTION	COUNTY	TOTAL SHEETS	SHEET NO.
F.A.I. 74	90-15(HB-D)I-1	TAZEWELL	101	42
FED. ROAD DIST. NO. 7	ILLINOIS	FED. AID PROJECT-		

SHEET NO. 17
29 SHEETS

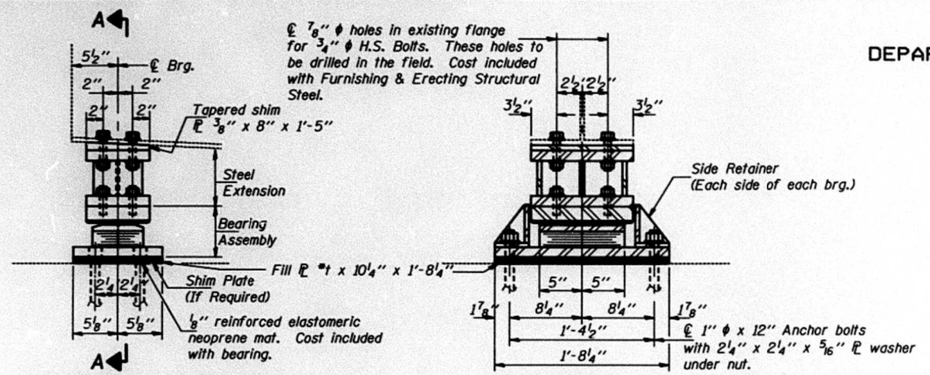

ELEVATION AT EAST ABUT. SECTION A-A

TYPE II ELASTOMERIC EXP. BRG.
(At Beam 9 EB & WB)

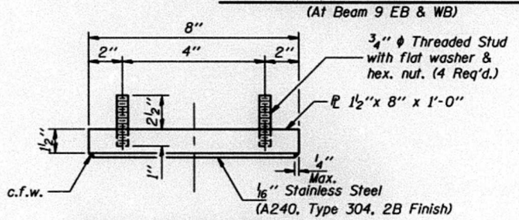

TOP BEARING ASSEMBLY

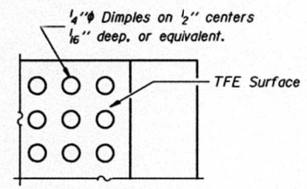

PLAN-TFE SURFACE

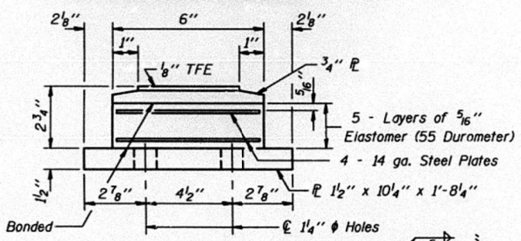

BOTTOM BEARING ASSEMBLY

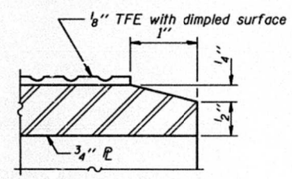

SECTION THRU TFE

Note: The ⅛" TFE sheet shall be bonded directly to the top steel plate with a two-component, medium viscosity epoxy resin, conforming to the requirements of the Federal Specification MMM-A-134, Type I. The bond agent shall be applied on the full area of the contact surfaces.

Bonding of ⅛" TFE sheet during vulcanizing process will be permitted provided the process and method of adjusting assembly height is approved by the Engineer.

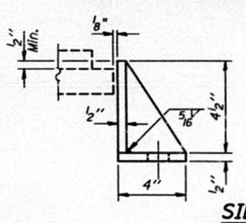

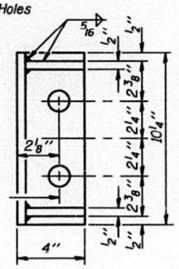

SIDE RETAINER

Equivalent rolled angle with stiffeners will be allowed in lieu of welded plates. Weight included with Structural Steel.

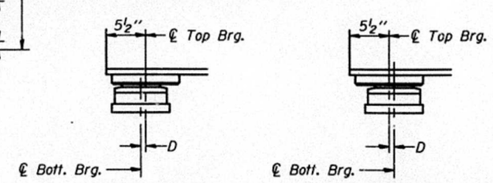

BELOW 50°F. (Move bott. brg. away from fixed brg.)

ABOVE 50°F. (Move bott. brg. toward fixed brg.)

SETTING ANCHOR BOLTS AT EXP. BRG.

D=⅛" per each 100' of expansion for every 15° temp. change from the normal temp. of 50°F.

Notes:
See sheet 18 of 29 for Anchor Bolt installation.
For Jack and Remove Existing Bearing Procedure, see sheet 15 of 29.
New steel extensions, side retainers, connection bolts, fill plates, shim plates and anchor bolts are included with Furnishing and Erecting Structural Steel.

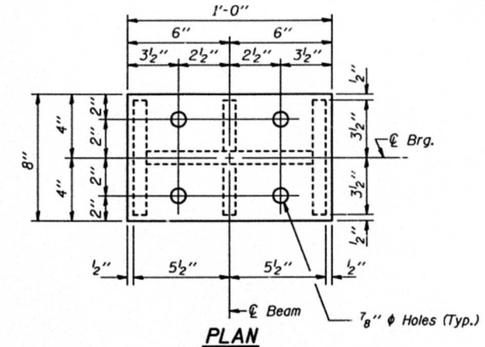

PLAN

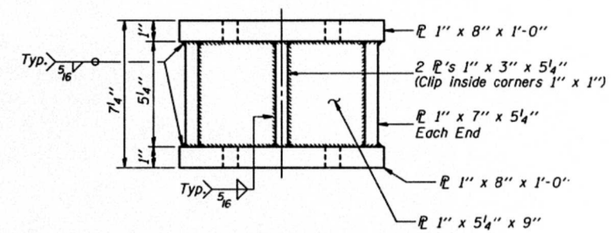

STEEL EXTENSION AT EAST ABUT.

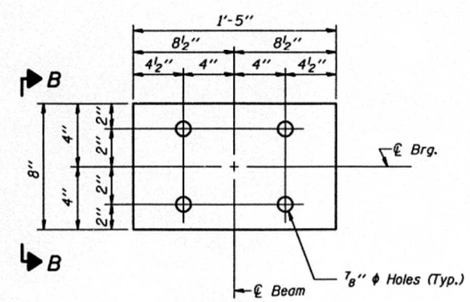

PLAN

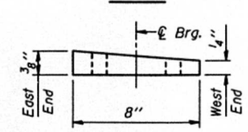

VIEW B-B

BILL OF MATERIAL

Item	Unit	Total
Jack and Remove Existing Bearings	Each	2
Elastomeric Bearing Assembly, Type II	Each	2

FOR INFORMATION ONLY

BEARING DETAILS AT EAST ABUTMENT
AT BEAM 9 EB & WB
F.A.I. RTE. 74 - SEC. 90(15HB-1)I-1
TAZEWELL COUNTY
STATION 634+12.35

DESIGNED	Chad Fuesting
CHECKED	Nicholas J. Sovell
DRAWN	Michael R. Gillette
CHECKED	C.J.F. N.J.S.

January 26, 2000
EXAMINED — ENGINEER OF BRIDGE DESIGN
PASSED — ENGINEER OF BRIDGES AND STRUCTURES

ROUTE NO.	SECTION	COUNTY	TOTAL SHEETS	SHEET NO.
F.A.I. 74	90 (15HB-1) I-1	TAZEWELL	101	45
FED. ROAD DIST. NO. 7	ILLINOIS	FED. AID PROJECT-		

SHEET NO. 20
29 SHEETS

Notes: Hatched area to be poured after superstructure forms have been removed. Quantity of concrete for hatched area is included with Concrete Superstructure on sheet 8 of 29.
Reinforcement bars designated (E) shall be epoxy coated.
For anchor bolt installation details see sheet 18 of 29.
For concrete removal details see sheet 19 of 29.
Work this sheet with sheets 21 & 22 of 29.

STATE OF ILLINOIS
DEPARTMENT OF TRANSPORTATION

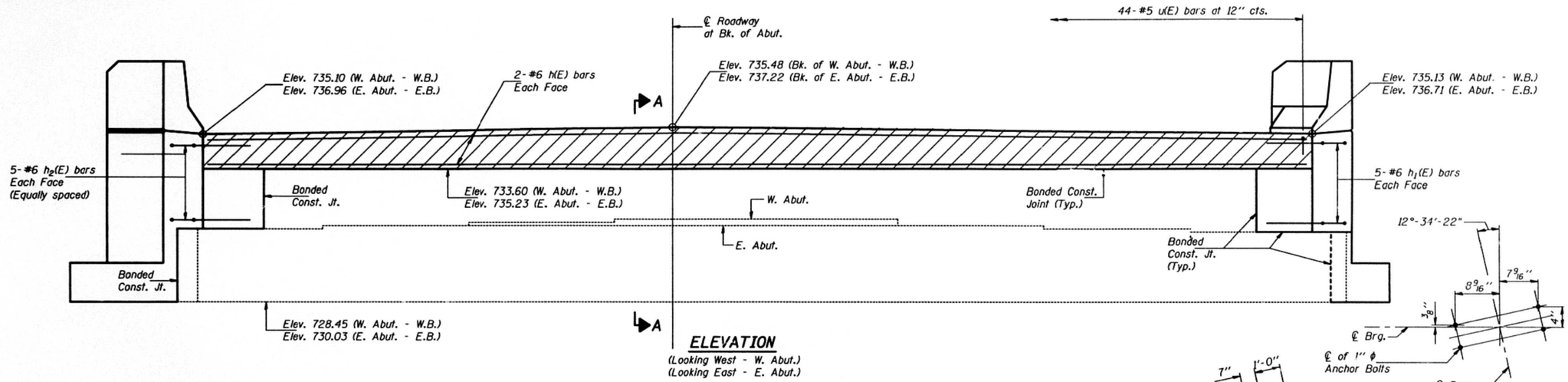

ELEVATION
(Looking West - W. Abut.)
(Looking East - E. Abut.)

DETAIL "B"

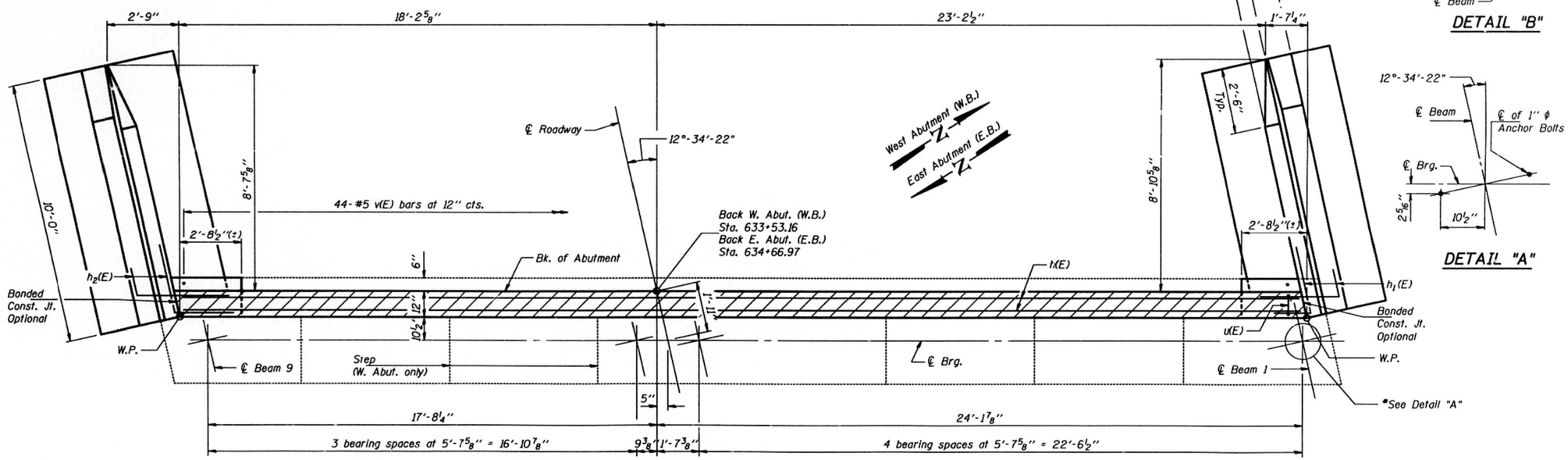

TOP VIEW

DETAIL "A"

DESIGNED	Chad Fuesting
CHECKED	Nicholas J. Sovell
DRAWN	Michael R. Gillette
CHECKED	C.J.F. N.J.S.

January 26, 2000
EXAMINED Thomas J. Domagalski
ENGINEER OF BRIDGE DESIGN
PASSED Ralph E. Anderson
ENGINEER OF BRIDGES AND STRUCTURES

FOR INFORMATION ONLY

* See Detail "B" for Beam 9, East Abutment.
Omit exterior anchor bolt for Beam 9, West Abutment.

WEST ABUTMENT - W. BOUND LANES
EAST ABUTMENT - E. BOUND LANES
F.A.I. RTE. 74 - SEC. 90(15HB-1)I-1
TAZEWELL COUNTY
STATION 634+12.35

MODEL: Default
FILE NAME: P:\2019\190388\W06 I-74 Bridge PSEs\4 CADD - DWG\4.4 Struc\090019-0020\090019-0020-68F54-031-Existing Abutment.dgn

TWM ENGINEERING GEOSPATIAL SERVICES
TWM, INC.
WWW.TWM-INC.COM
IL DESIGN FIRM LICENSE NO: 184-001220

USER NAME = mjoost	DESIGNED - NP	REVISED -
	CHECKED - ALN	REVISED -
PLOT SCALE = 0:2.0000 ':" / in.	DRAWN - NP	REVISED -
PLOT DATE = 12/1/2020	CHECKED - ALN	REVISED -

STATE OF ILLINOIS
DEPARTMENT OF TRANSPORTATION

EXISTING ABUTMENT
SN 090-0019 & 090-0020
SHEET 31 OF 37 SHEETS

F.A.I. RTE.	SECTION	COUNTY	TOTAL SHEETS	SHEET NO.
74	90-15(HB(1-4);VB;B)BP,BJR,BRR	TAZEWELL	192	75
		CONTRACT NO. 68F54		
		ILLINOIS	FED. AID PROJECT	

STATE OF ILLINOIS
DEPARTMENT OF TRANSPORTATION

ROUTE NO.	SECTION	COUNTY	TOTAL SHEETS	SHEET NO.
F.A.I. 74	90 (15HB-D) I-1	TAZEWELL	101	46
FED. ROAD DIST. NO. 7	ILLINOIS	FED. AID PROJECT-		

SHEET NO. 21
29 SHEETS

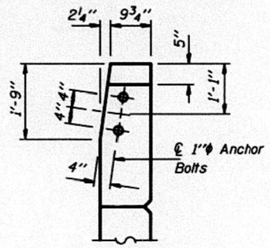

VIEW D-D

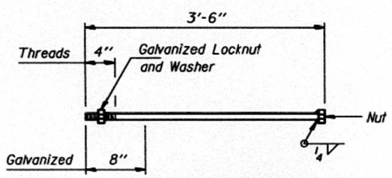

1" ϕ ANCHOR BOLT

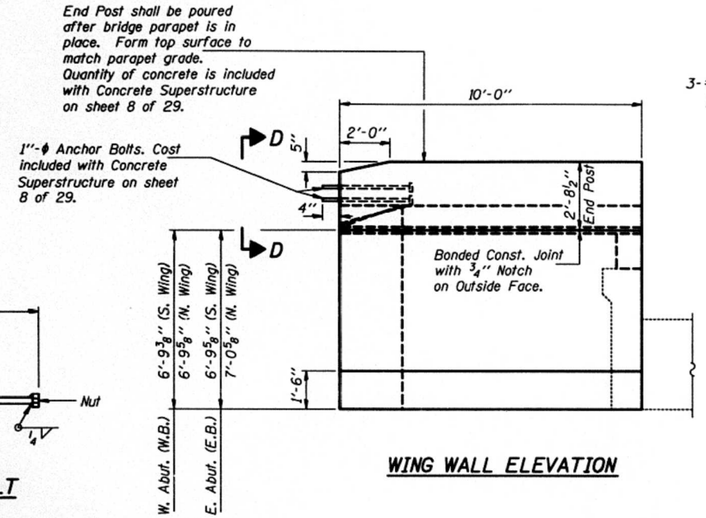

WING WALL ELEVATION

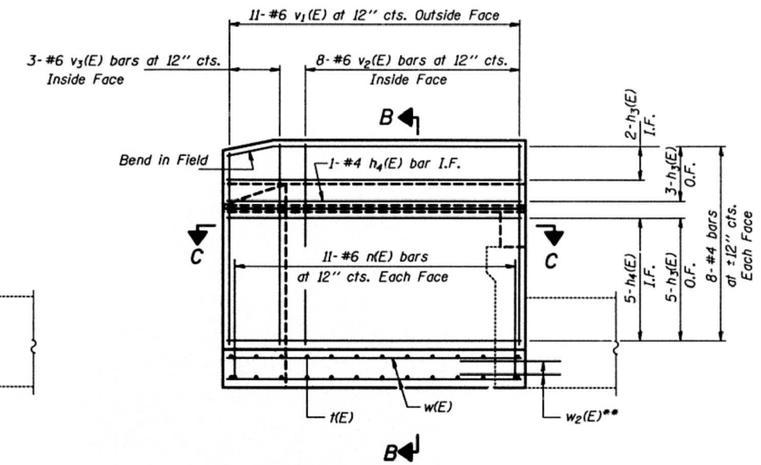

WING WALL ELEVATION
Reinforcement

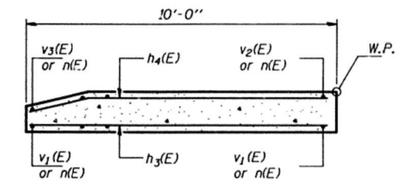

SECTION C-C

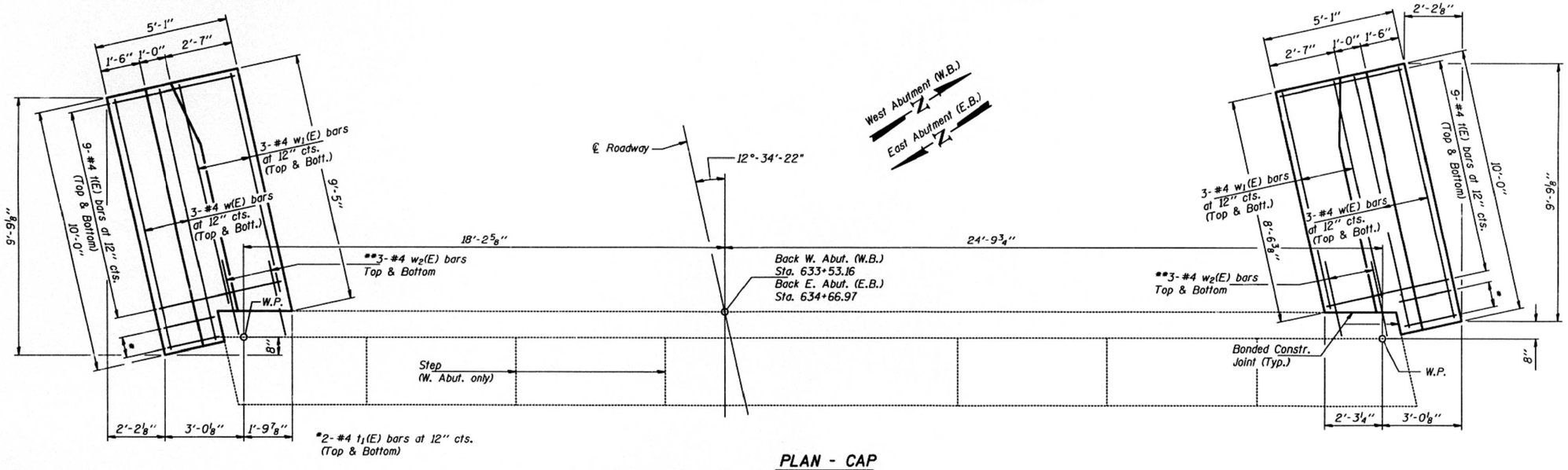

PLAN - CAP

DESIGNED	Chad Fuesting
CHECKED	Nicholas J. Sovell
DRAWN	Michael R. Gillette
CHECKED	C.J.F. N.J.S.

January 26, 2000
EXAMINED Thomas J. Domagalski — ENGINEER OF BRIDGE DESIGN
PASSED Robert E. Gaston — ENGINEER OF BRIDGES AND STRUCTURES

** Drill and grout bars in ¾" ϕ x 9" min. drilled holes according to Art. 584 of the Standard Specifications.

FOR INFORMATION ONLY

WEST ABUTMENT - W. BOUND LANES
EAST ABUTMENT - E. BOUND LANES
F.A.I. RTE. 74 - SEC. 90(15HB-1)I-1
TAZEWELL COUNTY
STATION 634+12.35

MODEL: Default
FILE NAME: P:\2019\190388\W06 I-74 Bridge PSEs\4 CADD - DWG\4.4 Struc\0900019-0020\0900019-0020-68F54-032_Existing Abutment.dgn

TWM ENGINEERING GEOSPATIAL SERVICES
TWM, INC. WWW.TWM-INC.COM
IL DESIGN FIRM LICENSE NO: 184-001220

USER NAME = mjoost	DESIGNED - NP	REVISED -	
	CHECKED - CDK	REVISED -	
PLOT SCALE = 0:2.0000 ':" / in.	DRAWN - NP	REVISED -	
PLOT DATE = 12/1/2020	CHECKED - CDK	REVISED -	

STATE OF ILLINOIS
DEPARTMENT OF TRANSPORTATION

EXISTING ABUTMENT
SN 090-0019 & 090-0020
SHEET 32 OF 37 SHEETS

F.A.I. RTE.	SECTION	COUNTY	TOTAL SHEETS	SHEET NO.
74	90-15(HB(1-4);VB;B)BP,BJR,BRR	TAZEWELL	192	76
		CONTRACT NO. 68F54		
		ILLINOIS	FED. AID PROJECT	

STATE OF ILLINOIS
DEPARTMENT OF TRANSPORTATION

ROUTE NO.	SECTION	COUNTY	TOTAL SHEETS	SHEET NO.
F.A.I. 74	90 (15HB-1) I-1	TAZEWELL	101	47
FED. ROAD DIST. NO. 7		ILLINOIS	FED. AID PROJECT-	

SHEET NO. 22
29 SHEETS

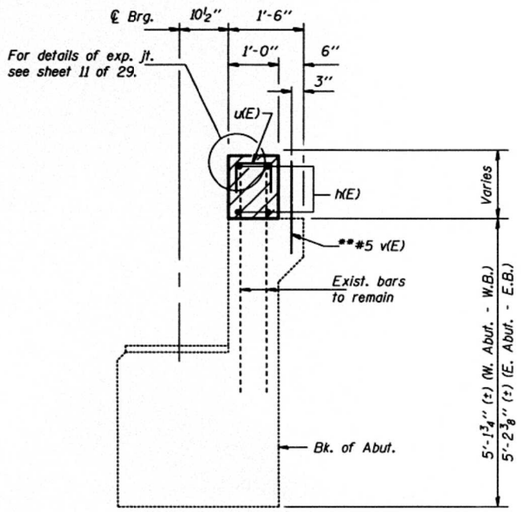

SECTION A-A
(Dimensions at Rt. L's)

** Drill & grout bars in ⅞" ϕ x 6" drilled holes according to Article 584 of the Standard Specifications.

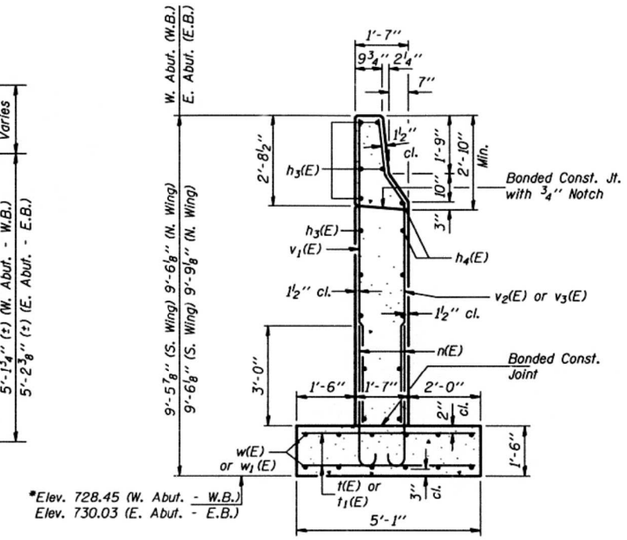

*Match existing bottom of footing elevation.

SECTION B-B

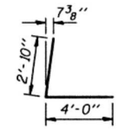

BAR h1(E)

BAR h2(E)

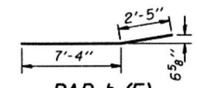

BAR h4(E)

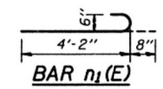

BAR n1(E)

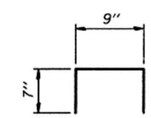

BAR u(E)

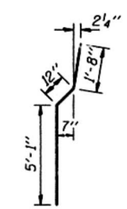

BAR v2(E)

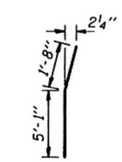

BAR v3(E)

TWO ABUTMENTS BILL OF MATERIAL

Bar	No.	Size	Length	Shape
h(E)	8	#6	42'-9"	
h1(E)	20	#6	6'-10"	
h2(E)	20	#6	6'-10"	
h3(E)	40	#4	9'-9"	
h4(E)	24	#4	9'-9"	
n(E)	88	#6	4'-10"	
t(E)	72	#4	4'-10"	
t1(E)	16	#4	2'-0"	
u(E)	88	#5	1'-11"	
v(E)	88	#5	1'-10"	
v1(E)	44	#6	7'-8"	
v2(E)	32	#6	7'-9"	
v3(E)	12	#6	6'-9"	
w(E)	24	#4	9'-9"	
w1(E)	24	#4	8'-3"	
w2(E)	24	#4	2'-2"	
Structure Excavation			Cu. Yd.	76.1
Concrete Structures			Cu. Yd.	24.1
Reinforcement Bars, Epoxy Coated			Pound	3900

Reinforcement bars designated (E) shall be epoxy coated.
Maximum footing pressure under wingwall = 1.43 KSF.
All edges shall have ¾" chamfer except as noted.

DESIGNED	Chad Fuesting
CHECKED	Nicholas J. Sovell
DRAWN	Michael R. Gillette
CHECKED	C.J.F. N.J.S.

January 26, 2000
EXAMINED Thomas J. Domagalski
ENGINEER OF BRIDGE DESIGN
PASSED Ralph E. Anderson
ENGINEER OF BRIDGES AND STRUCTURES

FOR INFORMATION ONLY

WEST ABUTMENT - W. BOUND LANES
EAST ABUTMENT - E. BOUND LANES
F.A.I. RTE. 74 - SEC. 90(15HB-1)I-1
TAZEWELL COUNTY
STATION 634+12.35

MODEL: Default
FILE NAME: P:\2019\190388\W06 I-74 Bridge PSEs\4 CADD - DWG\4.4 Struc\09000019-0020\09000019-0020-68F54-033 Existing Abutment.dgn

TWM ENGINEERING GEOSPATIAL SERVICES
TWM, INC.
WWW.TWM-INC.COM
IL DESIGN FIRM LICENSE NO: 184-001220

USER NAME = mjoost	DESIGNED - NP	REVISED -
	CHECKED - ALN	REVISED -
PLOT SCALE = 0:2.0000 ':" / in.	DRAWN - NP	REVISED -
PLOT DATE = 12/1/2020	CHECKED - ALN	REVISED -

STATE OF ILLINOIS
DEPARTMENT OF TRANSPORTATION

EXISTING ABUTMENT
SN 090-0019 & 090-0020
SHEET 33 OF 37 SHEETS

F.A.I. RTE.	SECTION	COUNTY	TOTAL SHEETS	SHEET NO.
74	90-15[HB(1-4);VB;B]BP,BJR,BRR	TAZEWELL	192	77
		CONTRACT NO. 68F54		
		ILLINOIS FED. AID PROJECT		

Notes: Hatched area to be poured after superstructure forms have been removed. Quantity of concrete for hatched area is included with Concrete Superstructure on sheet 8 of 29.
Reinforcement bars designated (E) shall be epoxy coated.
For anchor bolt installation details see sheet 18 of 29.
For concrete removal details see sheet 19 of 29.
Work this sheet with sheets 24 & 25 of 29.

STATE OF ILLINOIS
DEPARTMENT OF TRANSPORTATION

ROUTE NO.	SECTION	COUNTY	TOTAL SHEETS	SHEET NO.
F.A.I. 74	90 (15HB-1) I-1	TAZEWELL	101	48
FED. ROAD DIST. NO. 7		ILLINOIS	FED. AID PROJECT-	

SHEET NO. 23
29 SHEETS

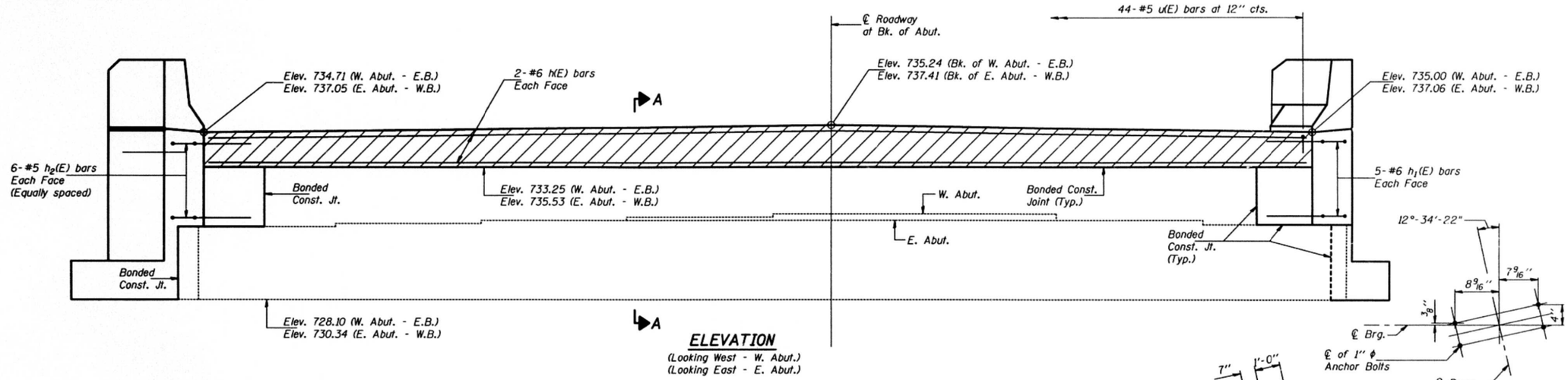

TOP VIEW

DESIGNED	Chad Fuesting
CHECKED	Nicholas J. Sovell
DRAWN	Michael R. Gillette
CHECKED	C.J.F. N.J.S.

January 26, 2000
EXAMINED Thomas J. Domagalski ENGINEER OF BRIDGE DESIGN
PASSED Ralph E. Anderson ENGINEER OF BRIDGES AND STRUCTURES

* See Detail "B" for Beam 9, East Abutment.
Omit exterior anchor bolt for Beam 9, West Abutment.

FOR INFORMATION ONLY

WEST ABUTMENT - E. BOUND LANES
EAST ABUTMENT - W. BOUND LANES
F.A.I. RTE. 74 - SEC. 90(15HB-1)I-1
TAZEWELL COUNTY
STATION 634+12.35

MODEL: Default
FILE NAME: P:\2019\190388\WO6 I-74 Bridge PSEs\4 CADD - DWG\4-4 Struc\090001 9-0020\090001 9-0020-68F54-034_Existing Abutment.dgn

TWM ENGINEERING GEOSPATIAL SERVICES
TWM, INC. WWW.TWM-INC.COM
IL DESIGN FIRM LICENSE NO: 184-001220

USER NAME = mjoost	DESIGNED - NP	REVISED -
	CHECKED - ALN	REVISED -
PLOT SCALE = 0:2.0000 ':' / in.	DRAWN - NP	REVISED -
PLOT DATE = 12/1/2020	CHECKED - ALN	REVISED -

STATE OF ILLINOIS
DEPARTMENT OF TRANSPORTATION

EXISTING ABUTMENT
SN 090-0019 & 090-0020
SHEET 34 OF 37 SHEETS

F.A.I. RTE.	SECTION	COUNTY	TOTAL SHEETS	SHEET NO.
74	90-15[HB(1-4);VB;B]BP,BJR,BRR	TAZEWELL	192	78
		CONTRACT NO. 68F54		
		ILLINOIS	FED. AID PROJECT	

STATE OF ILLINOIS
DEPARTMENT OF TRANSPORTATION

ROUTE NO.	SECTION	COUNTY	TOTAL SHEETS	SHEET NO.
F.A.I. 74	90 (15HB-1) I-1	TAZEWELL	101	49
FED. ROAD DIST. NO. 7	ILLINOIS	FED. AID PROJECT-		

SHEET NO. 24
29 SHEETS

End Post shall be poured after bridge parapet is in place. Form top surface to match parapet grade. Quantity of concrete is included with Concrete Superstructure on sheet 8 of 29.

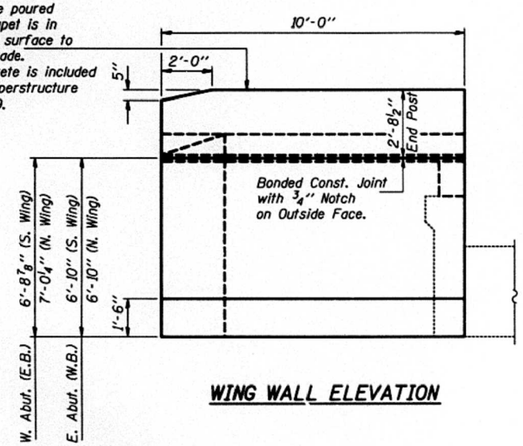

WING WALL ELEVATION

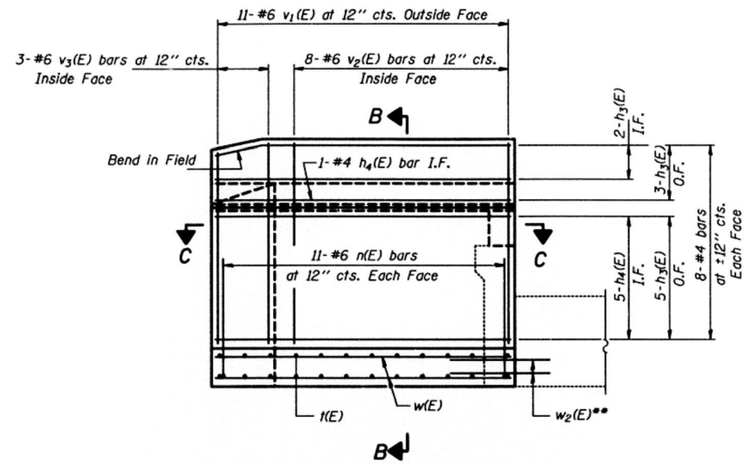

WING WALL ELEVATION
Reinforcement

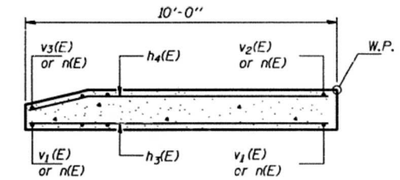

SECTION C-C

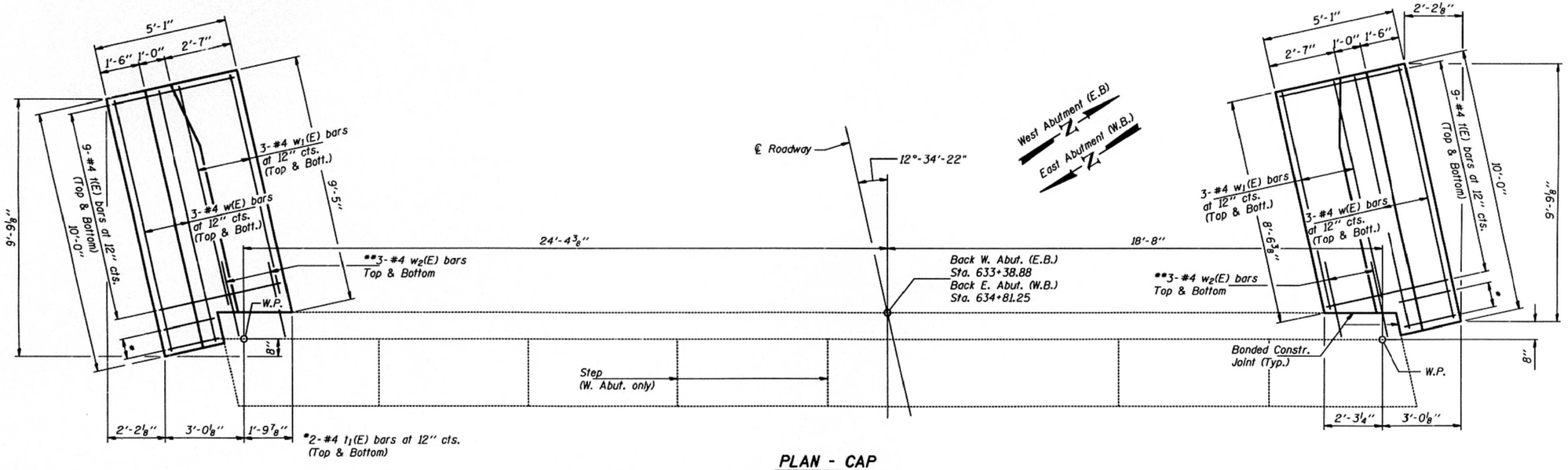

PLAN - CAP

DESIGNED	Chad Fuesting
CHECKED	Nicholas J. Sovell
DRAWN	Michael R. Gillette
CHECKED	C.J.F. N.J.S.

January 26, 2000
EXAMINED Thomas J. Domagalski
ENGINEER OF BRIDGE DESIGN
PASSED Ralph E. Anderson
ENGINEER OF BRIDGES AND STRUCTURES

** Drill and grout bars in ¾" ϕ x 9" min. drilled holes according to Art. 584 of the Standard Specifications.

FOR INFORMATION ONLY

WEST ABUTMENT - E. BOUND LANES
EAST ABUTMENT - W. BOUND LANES
F.A.I. RTE. 74 - SEC. 90(15HB-1)I-1
TAZEWELL COUNTY
STATION 634+12.35

MODEL: Default
FILE NAME: P:\2019\190388\W06 I-74 Bridge\PSEs\4 CADD - DWG\4.4 Struc\0900019-0020\0900019-0020-68F54-035_Existing Abutment.dgn

TWM ENGINEERING GEOSPATIAL SERVICES
TWM, INC.
WWW.TWM-INC.COM
IL DESIGN FIRM LICENSE NO: 184-001220

USER NAME = mjoost	DESIGNED - NP	REVISED -
	CHECKED - CDK	REVISED -
PLOT SCALE = 0:2.0000 ':' / in.	DRAWN - NP	REVISED -
PLOT DATE = 12/1/2020	CHECKED - CDK	REVISED -

STATE OF ILLINOIS
DEPARTMENT OF TRANSPORTATION

EXISTING ABUTMENT
SN 090-0019 & 090-0020
SHEET 35 OF 37 SHEETS

F.A.I. RTE.	SECTION	COUNTY	TOTAL SHEETS	SHEET NO.
74	90-15[HB(1-4);VB:B]BP,BJR,BRR	TAZEWELL	192	79
		CONTRACT NO. 68F54		
		ILLINOIS FED. AID PROJECT		

STATE OF ILLINOIS
DEPARTMENT OF TRANSPORTATION

ROUTE NO.	SECTION	COUNTY	TOTAL SHEETS	SHEET NO.
F.A.I. 74	90 (15HB-1) I-1	TAZEWELL	101	50
FED. ROAD DIST. NO. 7	ILLINOIS	FED. AID PROJECT-		

SHEET NO. 25
29 SHEETS

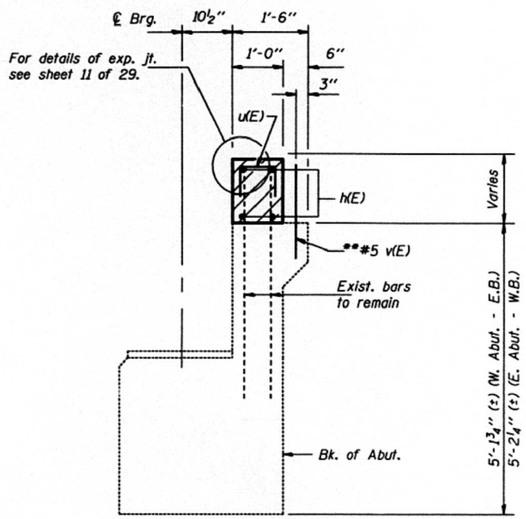

SECTION A-A
(Dimensions at Rt. L's)

** Drill & grout bars in ⅞" ϕ x 6" drilled holes according to Article 584 of the Standard Specifications.

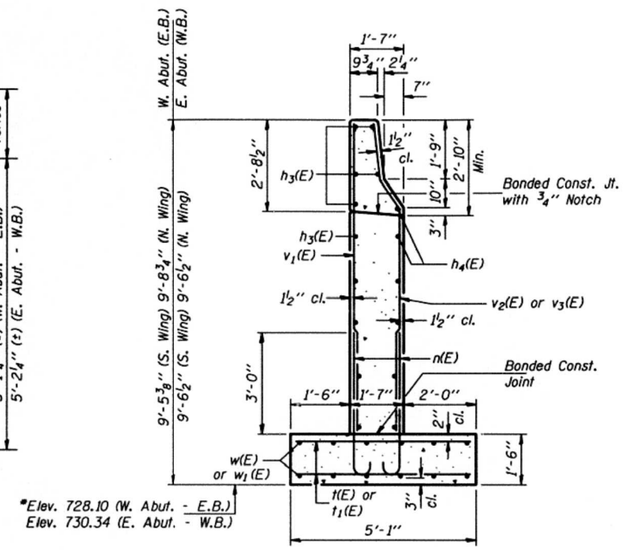

*Elev. 728.10 (W. Abut. - E.B.)
Elev. 730.34 (E. Abut. - W.B.)

*Match existing bottom of footing elevation.

SECTION B-B

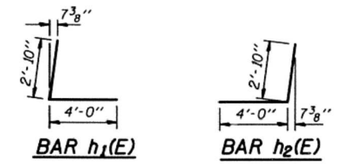

BAR h_1(E) BAR h_2(E)

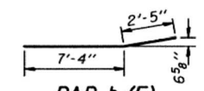

BAR h_4(E)

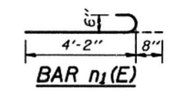

BAR n_1(E)

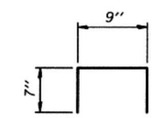

BAR u(E)

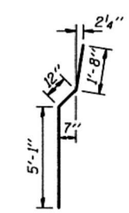

BAR v_2(E)

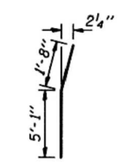

BAR v_3(E)

TWO ABUTMENTS BILL OF MATERIAL

Bar	No.	Size	Length	Shape
h(E)	8	#6	42'-9"	
h_1(E)	20	#5	6'-10"	
h_2(E)	20	#5	6'-10"	
h_3(E)	40	#4	9'-9"	
h_4(E)	24	#4	9'-9"	
n(E)	88	#6	4'-10"	
t(E)	72	#4	4'-10"	
t_1(E)	16	#4	2'-0"	
u(E)	88	#5	1'-11"	
v(E)	88	#5	1'-10"	
v_1(E)	44	#6	7'-8"	
v_2(E)	32	#6	7'-9"	
v_3(E)	12	#6	6'-9"	
w(E)	24	#4	9'-9"	
w_1(E)	24	#4	8'-3"	
w_2(E)	24	#4	2'-2"	
Structure Excavation			Cu. Yd.	76.1
Concrete Structures			Cu. Yd.	24.1
Reinforcement Bars, Epoxy Coated			Pound	3900

Reinforcement bars designated (E) shall be epoxy coated.
Maximum footing pressure under wingwall = 1.43 KSF.
All edges shall have ¾" chamfer except as noted.

DESIGNED	Chad Fuesting
CHECKED	Nicholas J. Sovell
DRAWN	Michael R. Gillette
CHECKED	C.J.F. N.J.S.

January 26, 2000
EXAMINED Thomas J. Domagalski
ENGINEER OF BRIDGE DESIGN
PASSED Ralph E. Anderson
ENGINEER OF BRIDGES AND STRUCTURES

FOR INFORMATION ONLY

WEST ABUTMENT - E. BOUND LANES
EAST ABUTMENT - W. BOUND LANES
F.A.I. RTE. 74 - SEC. 90(15HB-1)I-1
TAZEWELL COUNTY
STATION 634+12.35

MODEL: Default
FILE NAME: P:\2019\190388\W06 I-74 Bridge PSEs\4 CADD - DWG\4.4 Struc\0900019-0020\0900019-0020-68F54-036 Exisiting Abutment.dgn

TWM ENGINEERING GEOSPATIAL SERVICES
TWM, INC.
WWW.TWM-INC.COM
IL DESIGN FIRM LICENSE NO: 184-001220

USER NAME = mjoost	DESIGNED - NP	REVISED -	
	CHECKED - ALN	REVISED -	
PLOT SCALE = 0:2.0000 ':' / in.	DRAWN - NP	REVISED -	
PLOT DATE = 12/1/2020	CHECKED - ALN	REVISED -	

STATE OF ILLINOIS
DEPARTMENT OF TRANSPORTATION

EXISTING ABUTMENT
SN 090-0019 & 090-0020
SHEET 36 OF 37 SHEETS

F.A.I. RTE.	SECTION	COUNTY	TOTAL SHEETS	SHEET NO.
74	90-15[HB(1-4);VB;B]BP,BJR,BRR	TAZEWELL	192	80
		CONTRACT NO. 68F54		
	ILLINOIS	FED. AID PROJECT		

STATE OF ILLINOIS
DEPARTMENT OF TRANSPORTATION

ROUTE NO.	SECTION	COUNTY	TOTAL SHEETS	SHEET NO.
F.A.I. 74	90 (15HB-1) I-1	TAZEWELL	101	51
FED. ROAD DIST. NO. 7		ILLINOIS	FED. AID PROJECT-	

SHEET NO. 26
29 SHEETS

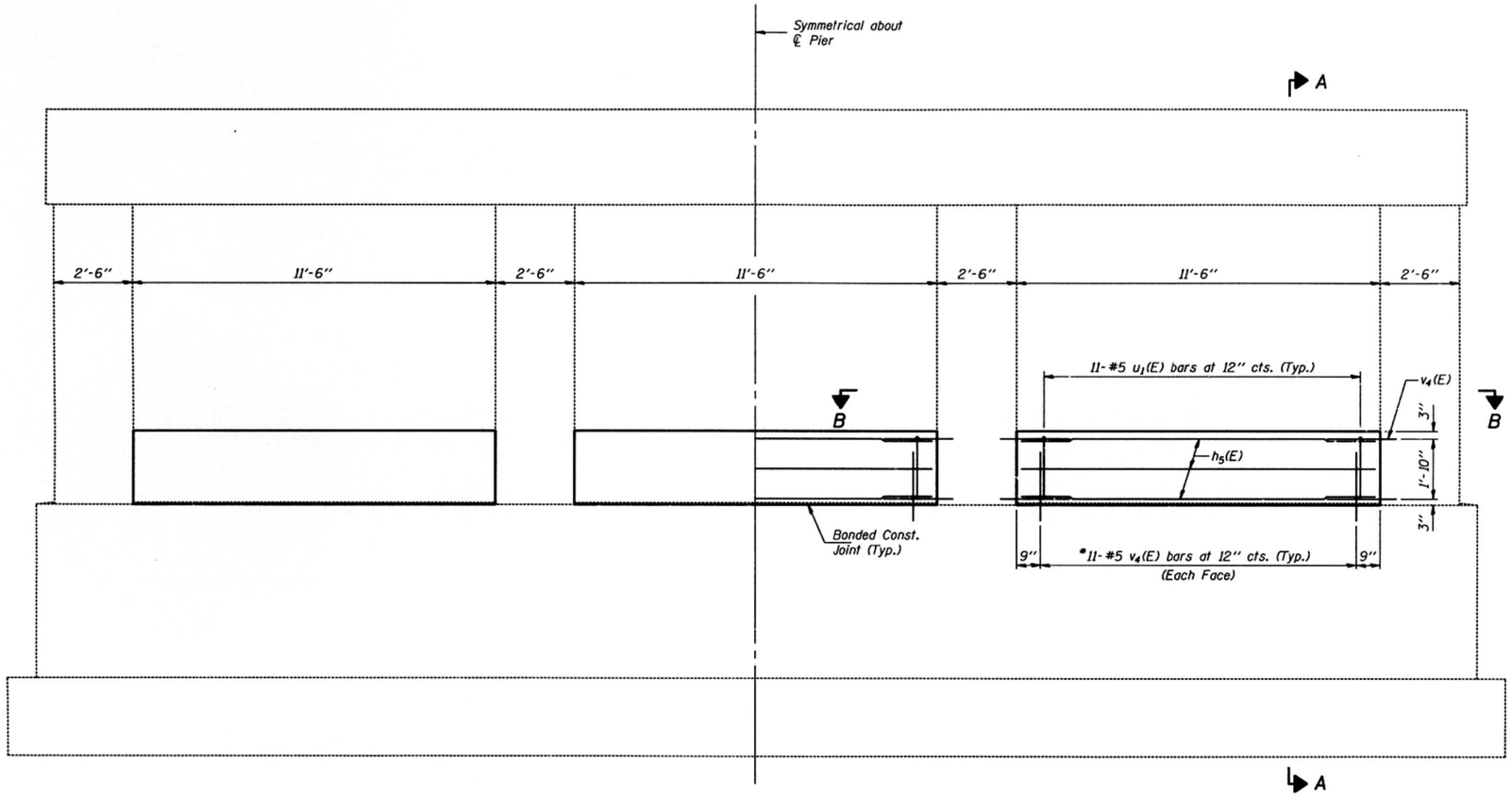

ELEVATION

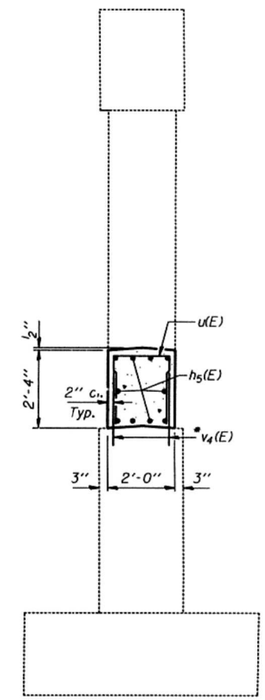

SECTION A-A

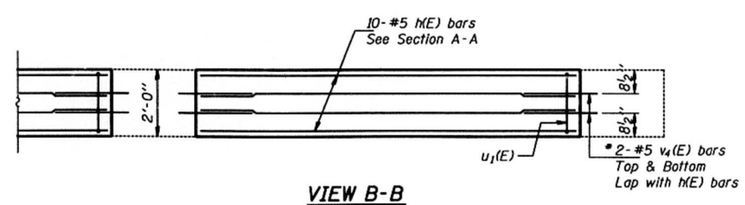

VIEW B-B

FOR INFORMATION ONLY

FOUR PIERS
BILL OF MATERIAL

Bar	No.	Size	Length	Shape
h_5(E)	120	#5	11'-3"	——
u_1(E)	132	#5	5'-8"	⊓
v_4(E)	360	#5	2'-2"	——
Concrete Structures			Cu. Yd.	23.8
Reinforcement Bars, Epoxy Coated			Pound	3000

DESIGNED	Chad Fuesting
CHECKED	Nicholas J. Srvell
DRAWN	Michael R. Gillette
CHECKED	C.J.F. N.J.S.

January 26, 2000
EXAMINED Thomas J. Domagalski
ENGINEER OF BRIDGE DESIGN
PASSED Ralph E. Anderson
ENGINEER OF BRIDGES AND STRUCTURES

* Drill & grout bars in 7/8" ϕ x 9" drilled holes according to Article 584 of the Standard Specifications. Locate bars to miss existing pier reinforcement.

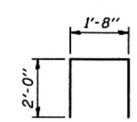

BAR u_1(E)

PIERS 1 & 2
F.A.I. RTE. 74 - SEC. 90(15HB-1)I-1
TAZEWELL COUNTY
STATION 634+12.35

MODEL: Default
FILE NAME: P:\2019\190388\WO6 I-74 Bridge PSEs\4 CADD - DWG\4.4 Struct\0900019-9020\090019-0020-68F54-037 Existing Pier.dgn

TWM ENGINEERING & GEOSPATIAL SERVICES
TWM, INC.
WWW.TWM-INC.COM
IL DESIGN FIRM LICENSE NO: 184-001220

USER NAME = mjoost	DESIGNED - NP	REVISED -	
	CHECKED - ALN	REVISED -	
PLOT SCALE = 0:2.0000 ':' / in.	DRAWN - NP	REVISED -	
PLOT DATE = 12/1/2020	CHECKED - ALN	REVISED -	

STATE OF ILLINOIS
DEPARTMENT OF TRANSPORTATION

EXISTING PIER
SN 090-0019 & 090-0020
SHEET 37 OF 37 SHEETS

F.A.I. RTE.	SECTION	COUNTY	TOTAL SHEETS	SHEET NO.
74	90-15[HB(1-4);VB;B]BP,BJR,BRR	TAZEWELL	192	81
		CONTRACT NO. 68F54		
		ILLINOIS	FED. AID PROJECT	

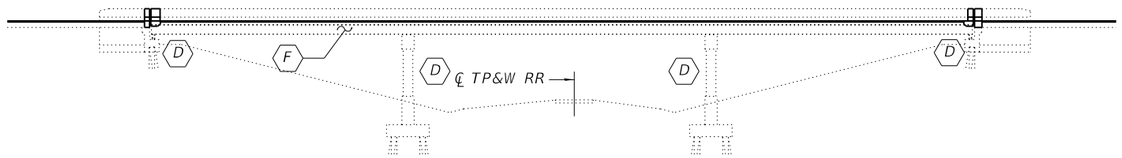

ELEVATION

INDEX OF SHEETS

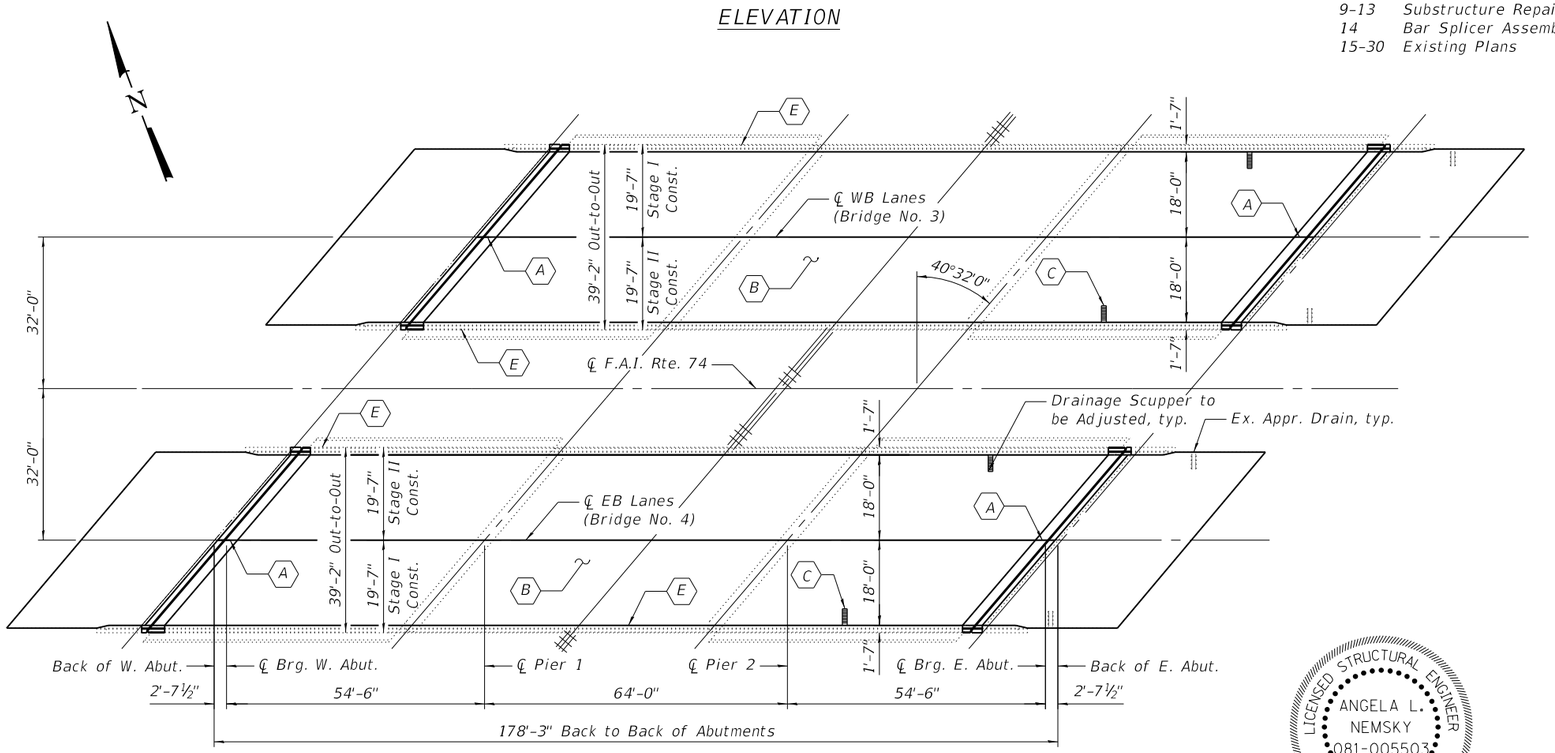

PLAN

- (A) – Remove and replace expansion joints at abutments
- (B) – ¾" Bridge Deck Scarification, 2¼" Microsilica Concrete Overlay on bridge deck, approach pavement, and transition slab
- (C) – Adjust Drainage Scuppers
- (D) – Concrete repair of abutments or piers
- (E) – Concrete repair of the parapets and apply Protective Coat (Special) to the top and inside face of parapets
- (F) – Clean and paint all structural steel and bearings

LICENSED STRUCTURAL ENGINEER
ANGELA L. NEMSKY
081-005503
STATE OF ILLINOIS

Angela L. Nemsky
12/01/2020
EXPIRES 11/30/2022

GENERAL NOTES

Plan dimensions and details relative to existing plans are subject to nominal construction variations. The Contractor shall field verify existing dimensions and details affecting new construction and make necessary approved adjustments prior to construction or ordering of materials. Such variations shall not be cause for additional compensation for a change in scope of work, however, the Contractor will be paid for the quantity actually furnished at the unit price bid for the work.

Reinforcement bars designated (E) shall be epoxy coated.

Prior to pouring new concrete, all heavy or loose rust, loose mill scale, and other loose or potentially detrimental foreign material shall be removed from the surfaces in contact with concrete. Tightly adhered paint may remain unless otherwise noted. Removal shall be accomplished by methods that will not damage the steel and the cost will be included in the pay item covering removal of existing concrete.

Existing reinforcement bars extending into the removal area shall be cleaned, straightened, and incorporated into the new construction. Any reinforcement bars that are damaged during concrete removal shall be replaced with an approved bar splicer or anchorage system. Cost included with Concrete Removal.

Joint openings shall be adjusted according to Article 520.04 of the Std. Specs. when the deck is poured at an ambient temperature other than 50° F.

The existing structural steel coating contains lead. The Contractor shall take appropriate precautions to deal with the presence of lead on this project.

Cleaning and painting of the existing structural steel shall be as specified in the special provision for "Cleaning and Painting Existing Steel Structures". All beams, bearings, and other structural steel shall be cleaned per Near White Blast Cleaning (SSPC–SP10). The exterior surfaces and bottom of the bottom flange of the fascia beams shall be cleaned per Commercial Grade Power Tool Cleaning (SSPC–SP15).

The designated areas cleaned per Near White Blast Cleaning (SSPC–SP10) and per Commercial Grade Power Tool Cleaning (SSPC–SP15) shall be painted according to the requirements of paint system 1 – OZ/E/U. The color of the final finish coat for all interior steel surfaces shall be Gray (Munsell No. 5B 7/1). The color of the final finish coat for the exterior and bottom flange of the fascia beams shall be Blue (Munsell No. 10B 3/6).

A minimum of 2 air monitors will be required to monitor abrasive blasting operations at this site. See special provision for "Containment and Disposal of Lead Paint Cleaning Residues".

SSPC QP1 and SSPC QP2 Certification is required for this Contract.

Care shall be taken not to damage rubber bearing or joint components during blasting and cleaning operations. Any damage to these components shall be repaired at the contractor's expense.

TOTAL BILL OF MATERIAL

ITEM	UNIT	SUPER	SUB	TOTAL
Concrete Removal	Cu. Yd.	28.6		28.6
Concrete Superstructure	Cu. Yd.	31.0		31.0
Preformed Joint Strip Seal	Foot	198		198
Reinforcement Bars, Epoxy Coated	Pound	4000		4000
Bar Splicers	Each	56		56
Protective Coat	Sq. Yd.	1888		1888
Bridge Deck Grooving	Sq. Yd.	1740		1740
Structural Repair of Concrete (Depth ≤ 5")	Sq. Ft.	176.0	31.7	207.7
Bridge Deck Scarification, ¾"	Sq. Yd.	2164		2164
Bridge Deck Microsilica Concrete Overlay, 2¼"	Sq. Yd.	2164		2164
Containment and Disposal of Lead Paint Residues No. 3	L. Sum	1		1
Containment and Disposal of Lead Paint Residues No. 4	L. Sum	1		1
Cleaning and Painting Steel Bridge No. 3	L. Sum	1		1
Cleaning and Painting Steel Bridge No. 4	L. Sum	1		1
Protective Coat (Special)	Sq. Yd.	561		561
Surface Filler (Special)	Gallon	9		9
Drainage Scuppers to be Adjusted	Each	4		4

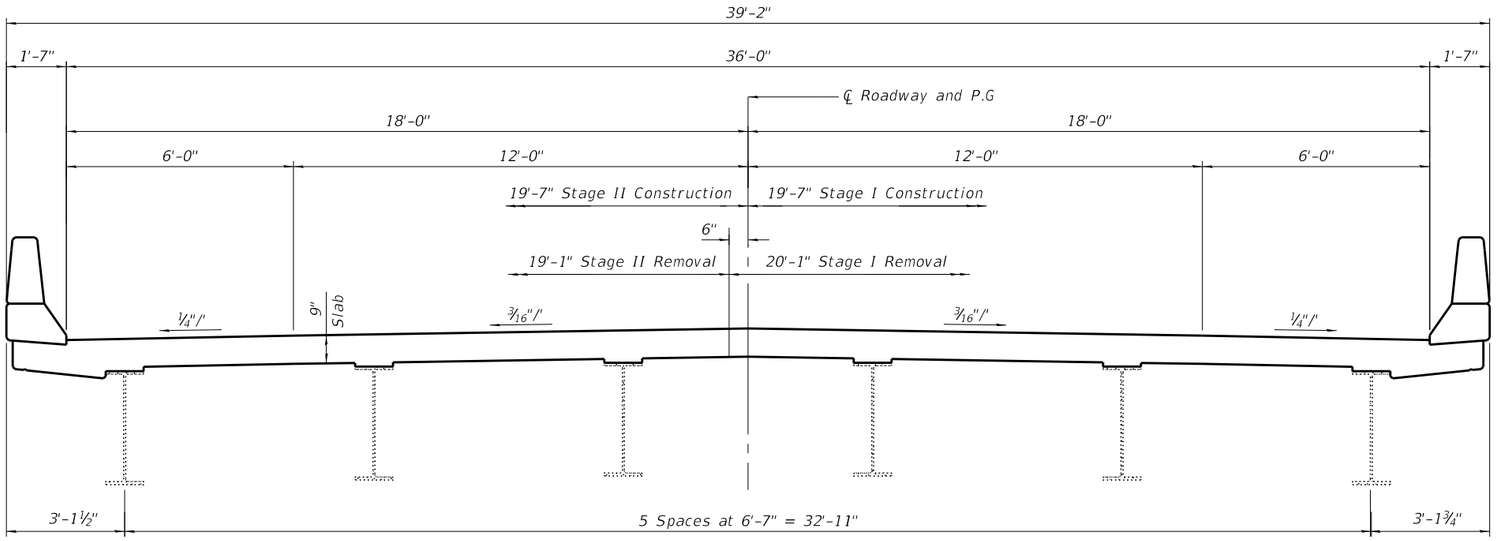

CROSS SECTION AT ABUTMENT

(Looking East – E. Bound Lanes S.N. 090-0021)
(Looking West – W. Bound Lanes S.N. 090-0022)

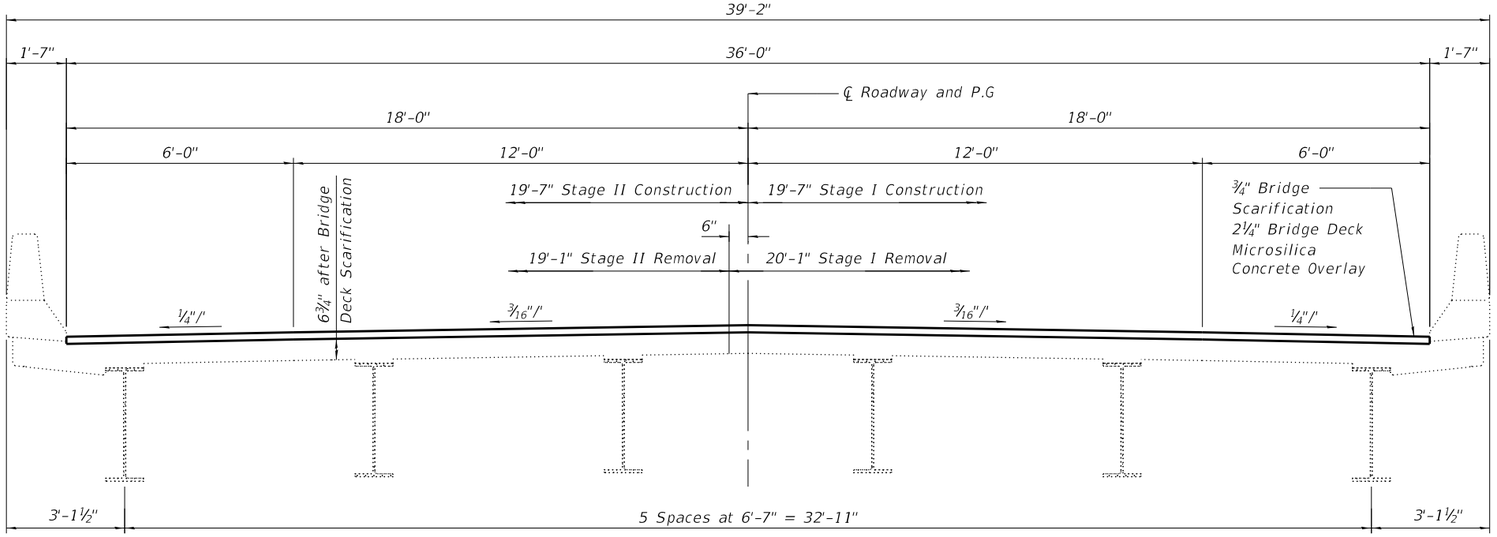

CROSS SECTION AT MIDSPAN

(Looking East – E. Bound Lanes S.N. 090-0021)
(Looking West – W. Bound Lanes S.N. 090-0022)

MODEL: Default
FILE NAME: P:\2019\190388\W06 I-74 Bridge PSEs\4 CADD - DWG\4.4 Struc\0900021-0022\0900021-0022-68F54-002 Typical Section 0021-0022.dgn

TWM ENGINEERING GEOSPATIAL SERVICES	TWM, INC. WWW.TWM-INC.COM	USER NAME = ckoltveit	DESIGNED - DRA	REVISED -	STATE OF ILLINOIS DEPARTMENT OF TRANSPORTATION	BRIDGE CROSS SECTIONS SN. 090–0021 AND SN. 090–0022	F.A.I. RTE.	SECTION	COUNTY	TOTAL SHEETS	SHEET NO.
			CHECKED - CDK	REVISED -			74	90-15[HB(1-4);VB:B]BP,BJR,BRR	TAZEWELL	192	83
	IL DESIGN FIRM LICENSE NO: 184-001220	PLOT SCALE = 0:2.0000 ':" / in.	DRAWN - DRA	REVISED -					CONTRACT NO. 68F54		
		PLOT DATE = 12/1/2020	CHECKED - CDK	REVISED -		SHEET 2 OF 30 SHEETS		ILLINOIS	FED. AID PROJECT		

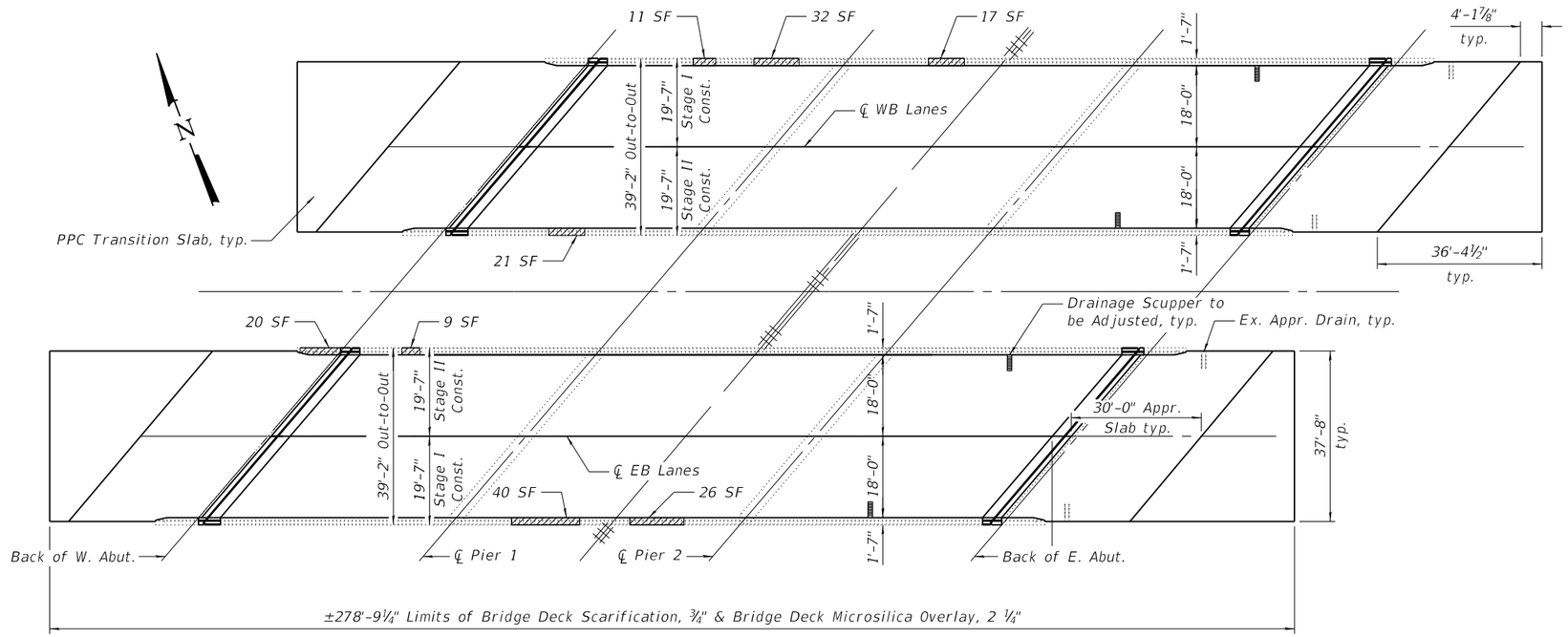

PLAN

▨ – Structural Repair of Concrete (Depth ≤ or Equal to 5")

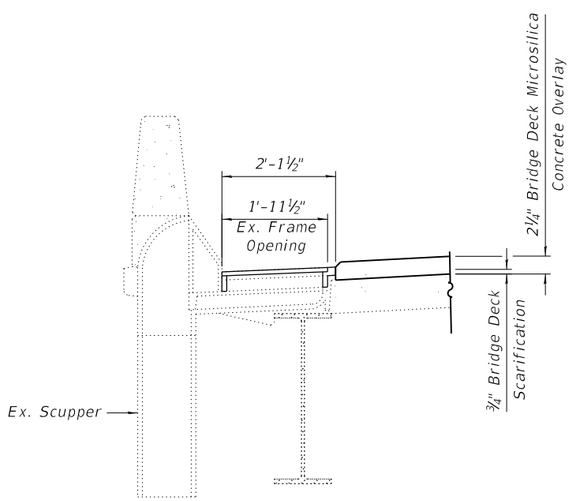

TYPICAL DS-22 SCUPPER DETAIL

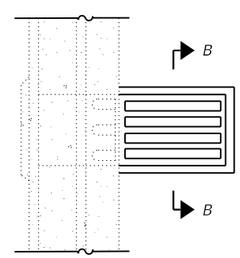

PLAN

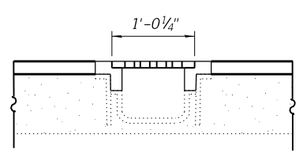

SECTION B-B

Notes:

1. The Contractor shall field verify existing dimensions and details of the existing scupper to make necessary adjustments prior to construction of new Adjusting Ring or ordering of material for adjusting drainage scuppers
2. All cast iron parts shall be Grey Iron conforming to the requirements of AASHTO M 105, Class 35B.
3. Bolts, anchor studs, washers, and nuts shall conform to the requirements of ASTM A 307 and shall be galvanized according to the requirements of AASHTO M 232.
4. Cast iron parts shall be unfinished.
5. Adjusting Ring shall be from Neenah or approved equal. Structural Steel weldments or equivalent sections of the same configuration may be submitted for cast iron. Fillet or full penetration welds may be used for weldments. Details shall be submitted to the Engineer for approval.
6. Provide a ⅛" fillet weld around perimeter of new Adjusting Ring to secure to existing scupper. Electrode shall be compatible with cast iron.
7. Cost of all labor and materials necessary to clean all existing scuppers, to install adjusting scupper rings, and to remove and re-install grates is included in the cost for Drainage Scuppers to be Adjusted.

BILL OF MATERIAL

	Item	Unit	Quantity
	Bridge Deck Grooving	Sq. Yd.	1740
	Structural Repair of Concrete (Depth ≤ or Equal to 5")	Sq. Ft.	176
*	Protective Coat	Sq. Yd.	1888
**	Protective Coat (Special)	Sq. Yd.	561
	Surface Filler (Special)	Gallon	9
	Bridge Deck Microsilica Concrete Overlay, 2¼"	Sq. Yd.	2164
	Bridge Deck Scarification, ¾"	Sq. Yd.	2164
	Drainage Scuppers to be Adjusted	Each	4

* Apply to new concrete and overlay only. (Bridge & Appr. Slab)

** Apply to parapets only. (Bridge & Appr. Slab)

MODEL: Default
FILE NAME: P:\2019\19038BWO6 I-74 Bridge PSEs\4 CADD - DWG\4.4 Struc\0900021-0022\0900021-0022-68F54-003 Bridge Deck Repair Details.dgn

TWM ENGINEERING & GEOSPATIAL SERVICES
TWM, INC.
WWW.TWM-INC.COM
IL DESIGN FIRM LICENSE NO: 184-001220

USER NAME = ckoltveit	DESIGNED - CDK	REVISED -	
	CHECKED - ALN	REVISED -	
PLOT SCALE = 0:2.0000 ':' / in.	DRAWN - CDK	REVISED -	
PLOT DATE = 12/1/2020	CHECKED - ALN	REVISED -	

STATE OF ILLINOIS
DEPARTMENT OF TRANSPORTATION

DECK REPAIR PLAN
SN 090-0021 & SN090-0022
SHEET 3 OF 30 SHEETS

F.A.I. RTE.	SECTION	COUNTY	TOTAL SHEETS	SHEET NO.
74	90-15[HB(1-4);VB;B]BP,BJR,BRR	TAZEWELL	192	84

CONTRACT NO. 68F54
ILLINOIS FED. AID PROJECT

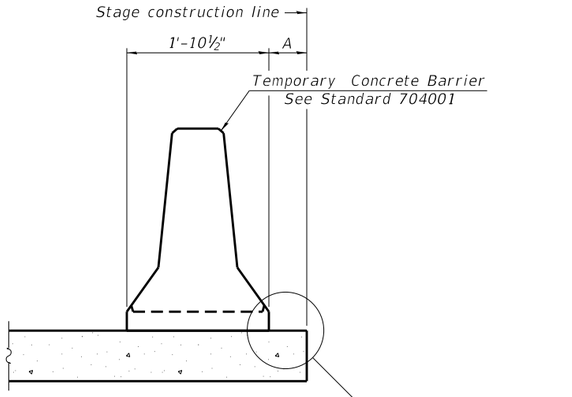

When "A" is 3'-1" or less, the temporary concrete barrier shall be restrained to the new slab according to Detail I, II or III. No restraint is required when "A" is greater than 3'-1".

NEW SLAB OR NEW DECK BEAM

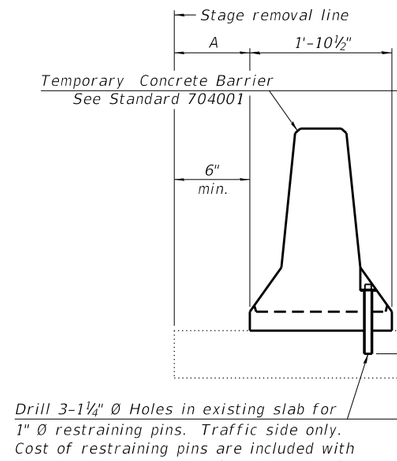

Drill 3-1¼" Ø Holes in existing slab for 1" Ø restraining pins. Traffic side only. Cost of restraining pins are included with Temporary Concrete Barrier. No restraint is required when "A" is greater than 3'-1".

EXISTING SLAB

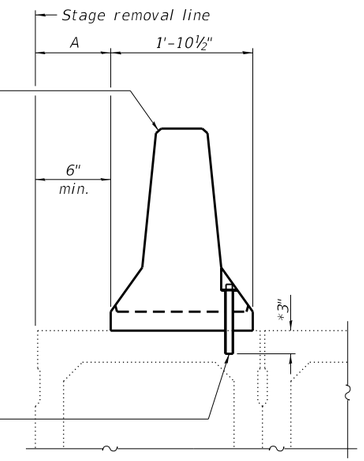

* When hot-mix asphalt wearng surface is present, embedment shall be 3" plus the wearing surface depth.

EXISTING DECK BEAM

SECTIONS THRU SLAB OR DECK BEAM

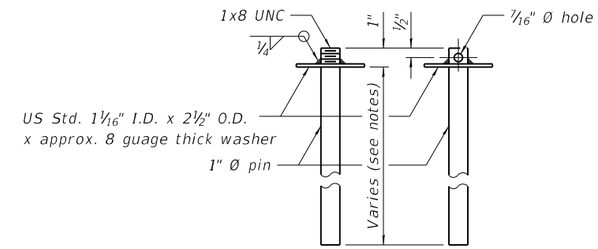

RESTRAINING PIN

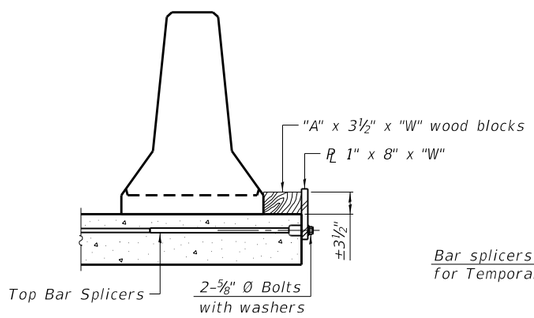

DETAIL I

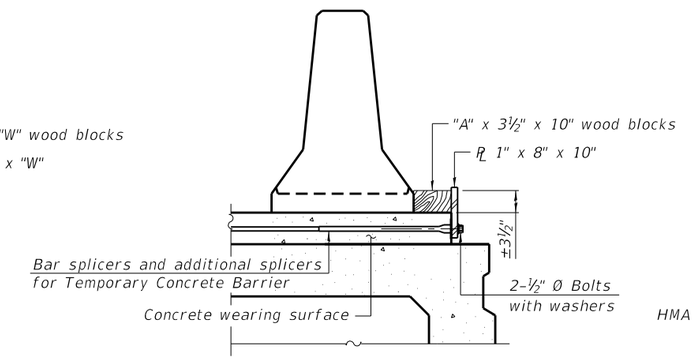

DETAIL II

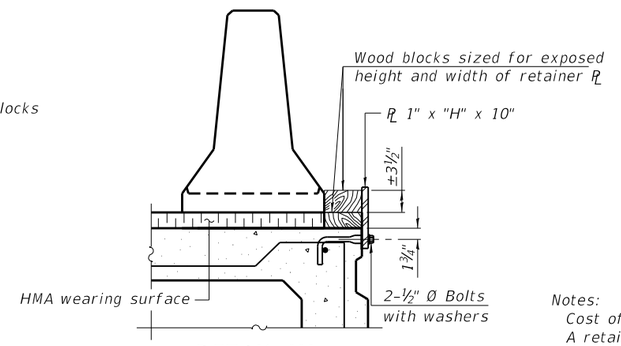

DETAIL III

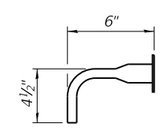

BAR SPLICER FOR #4 BAR - DETAIL III

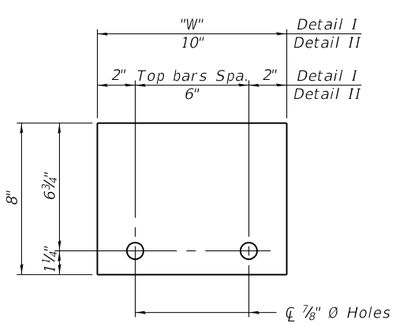

STEEL RETAINER PL 1" x 8" x "W"

(Detail I and II)

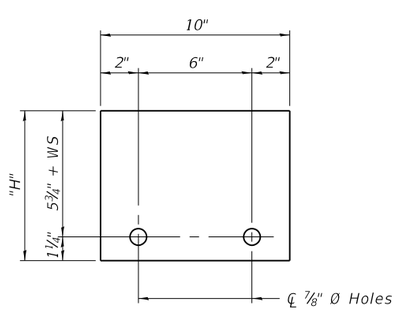

STEEL RETAINER PL 1" x "H" x 10"

(Detail III)

Notes:

Cost of retainer assembly is included with Temporary Concrete Barrier.

A retainer assembly shall be located at the approximate ℄ of each temporary concrete barrier.

The retainer plate shall not be removed until the concrete on the adjacent stage is ready to be poured. For Detail III applications the retainer plate shall not be removed until just prior to placing the adjacent beam.

When the 'A' dimension is less than 1½", the wood block shall be omitted and the barrier shall be placed in direct contact with the steel retainer plate. For deck beam applications the minimum required 'A' distance is 6" to accommodate the shear key clamping device.

Detail I - Installation for a new bridge deck or bridge slab.

Detail II - Installation for a new deck beam with an initial concrete wearing surface. Additional bar splicers shall be provided at 6'-0" centers and paired with the bar splicers of the concrete wearing surface reinforcement to accommodate the installation of the retainer assemblies. The cost of the additional bar splicers is included with the concrete wearing surface.

Detail III - Installation for a new deck beam with no initial wearing surface or with an initial hot-mix asphalt (HMA) wearing surface present. The deck beam directly beneath the temporary concrete barrier shall be fabricated with bar splicer inserts in the side of the beam, as detailed, to accommodate the installation of the retainer assemblies. A pair of bar splicers, 6" apart, shall be placed at 6'-0" centers along the length of the beam. The cost of the bar splicers is included with the deck beam.

See Roadway Plans for quantity.

R-27

2-17-2017

MODEL: Default
FILE NAME: P:\2019\190388\W06 I-74 Bridge PSEs\4 CADD - DWG\4.4 Struc\0900021-0022\0900021-0022-68F54-004 Temporary Barrier Details.dgn

TWM ENGINEERING GEOSPATIAL SERVICES	TWM, INC. WWW.TWM-INC.COM IL DESIGN FIRM LICENSE NO: 184-001220	USER NAME = ckoltveit	DESIGNED - DRA	REVISED -	STATE OF ILLINOIS DEPARTMENT OF TRANSPORTATION	TEMPORARY CONCRETE BARRIER FOR STAGE CONSTRUCTION STRUCTURE NO. 090-0021 & 090-0022	F.A.I. RTE.	SECTION	COUNTY	TOTAL SHEETS	SHEET NO.
			CHECKED - CDK	REVISED -			74	90-15(HB(1-4);VB;B]BP,BJR,BRR	TAZEWELL	192	85
		PLOT SCALE = 0:2.0000 ':" / in.	DRAWN - DRA	REVISED -					CONTRACT NO. 68F54		
		PLOT DATE = 12/1/2020	CHECKED - CDK	REVISED -		SHEET 4 OF 30 SHEETS		ILLINOIS	FED. AID PROJECT		

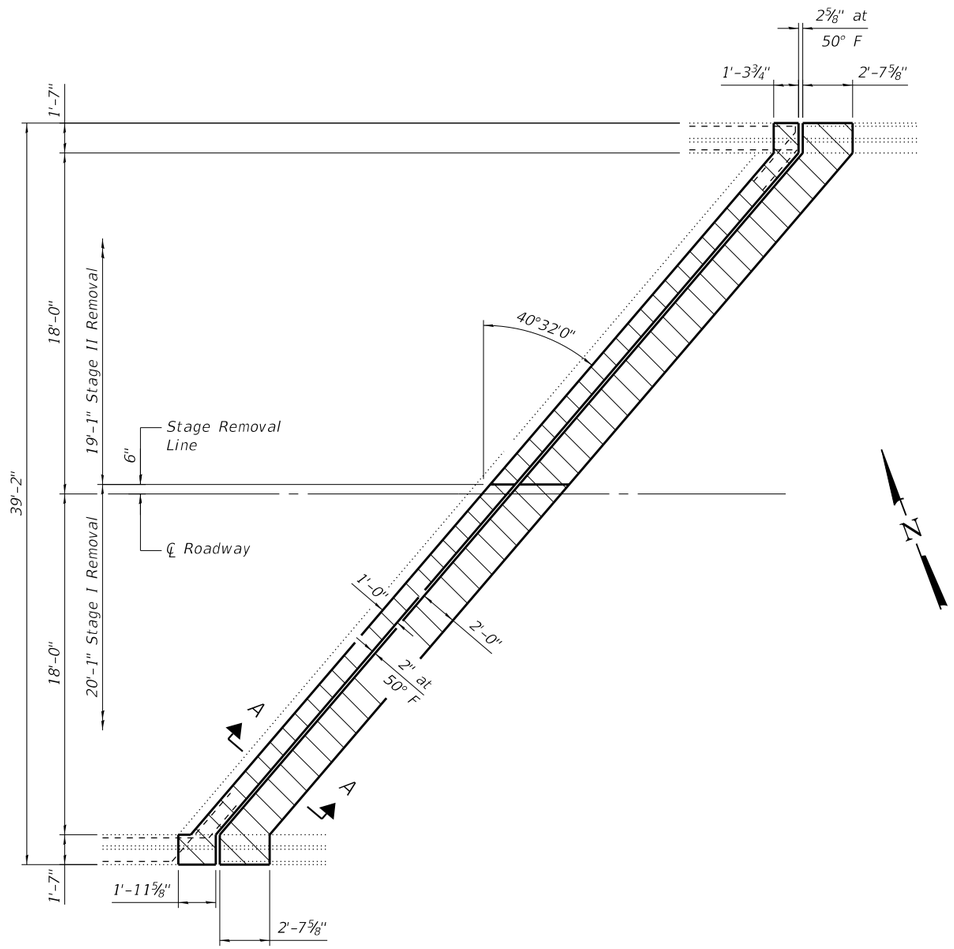

PLAN

CONCRETE REMOVAL AT W. ABUT.

Stage removal dimensions are shown
for the EB structure. WB is similar.

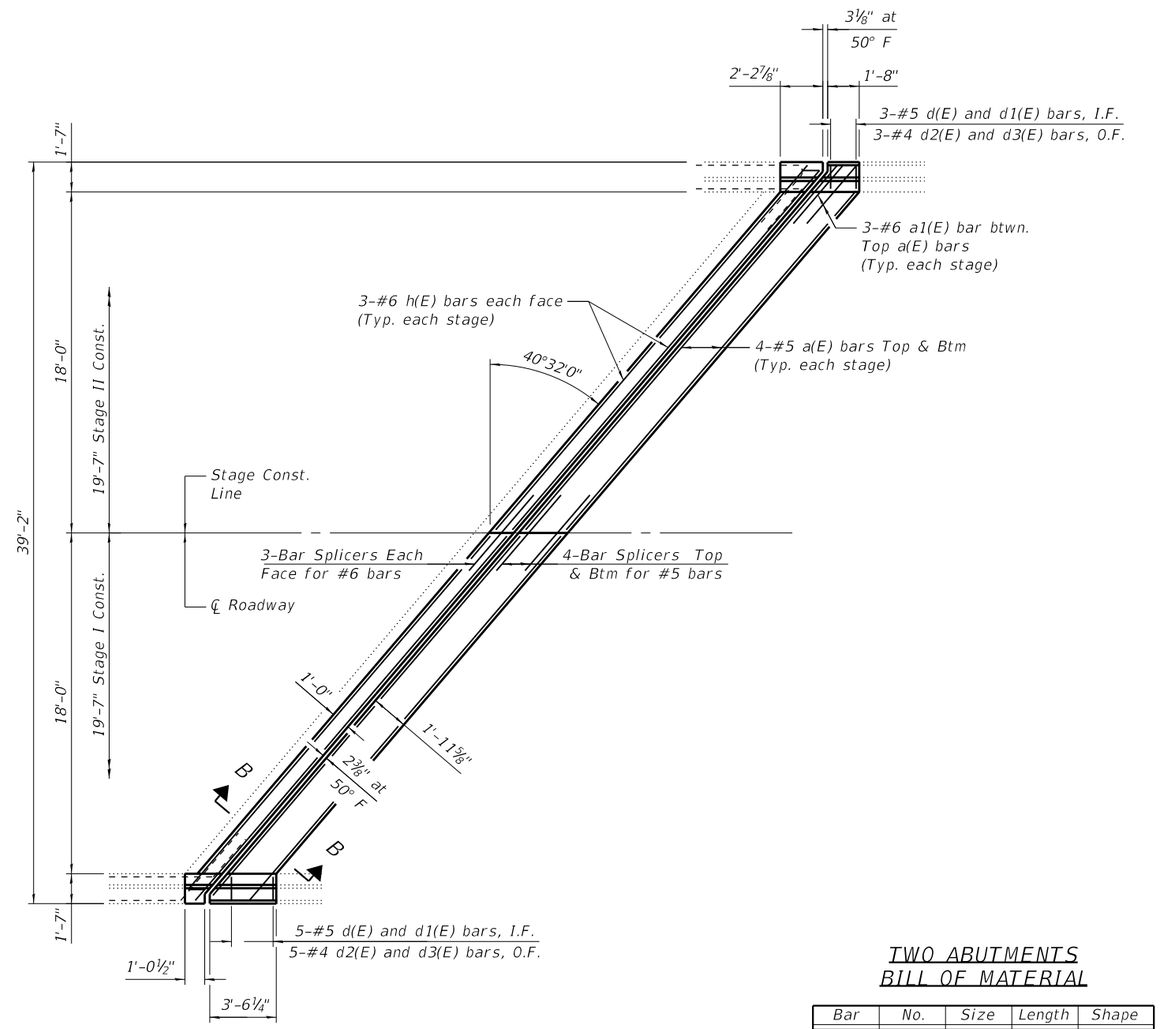

PLAN

CONCRETE REPLACEMENT AT W. ABUT.

TWO ABUTMENTS BILL OF MATERIAL

	Bar	No.	Size	Length	Shape
*	a(E)	32	#5	25'-3"	
	a1(E)	12	#6	4'-0"	
	d(E)	16	#5	3'-0"	
	d1(E)	16	#5	2'-7"	
	d2(E)	16	#4	3'-0"	
	d3(E)	16	#4	4'-1"	
*	h(E)	24	#6	25'-3"	
	Concrete Removal			Cu. Yd.	14.3
	Concrete Superstructure			Cu. Yd.	15.5
	Reinforcement Bars, Epoxy Coated			Pound	2000

* Cut to fit as required.

Notes:
EB structure shown, WB similar.
Hatched areas indicate Concrete Removal.
For Section view, see sheet 7 of 30.
Dimensions are based on a Rolled Rail Strip Seal Joint.
If the contractor elects to use the Welded Rail Strip Seal Joint, deck dimensions may require adjustments to satisfy the details on sheet 8 of 30.

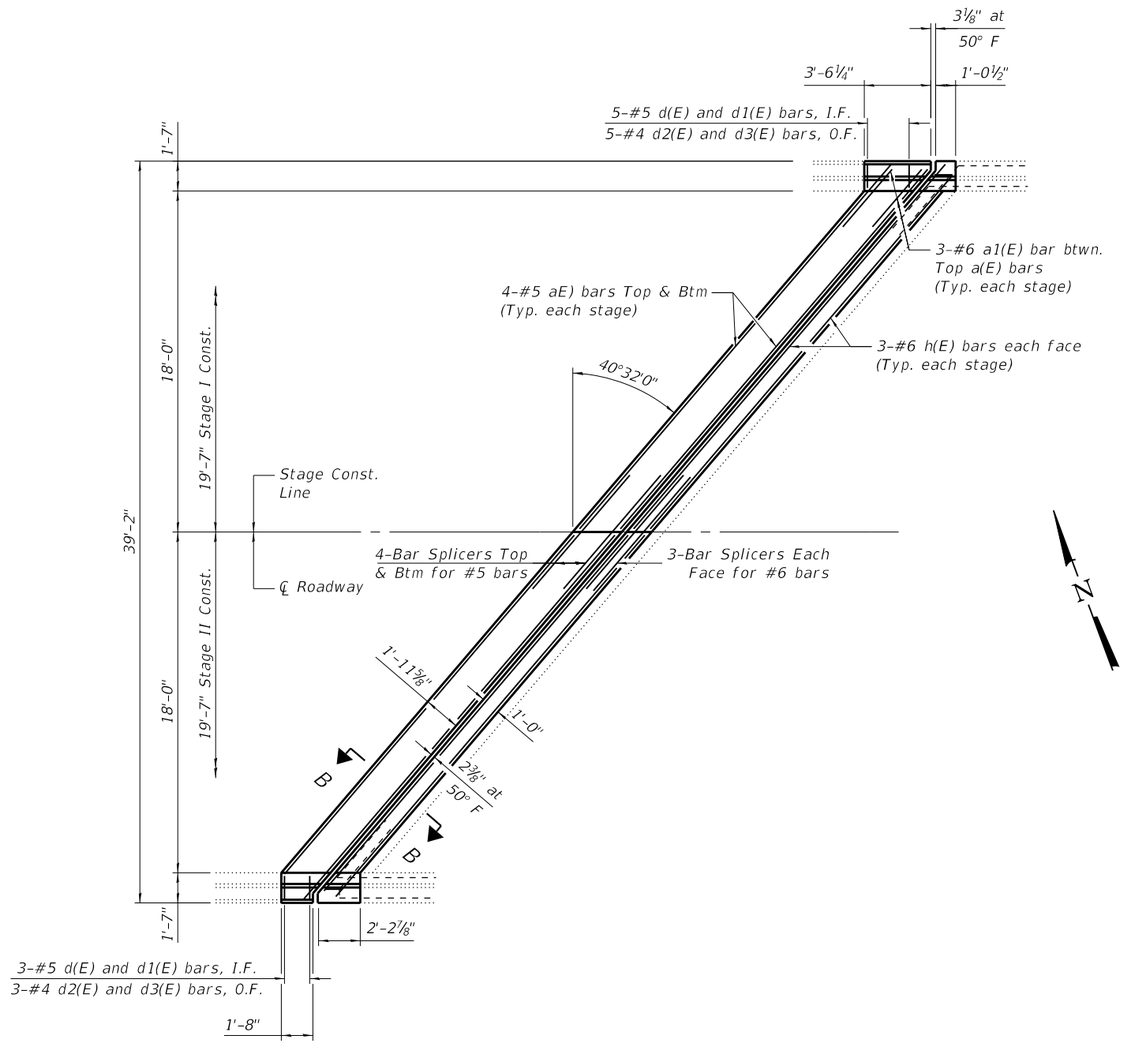

PLAN

CONCRETE REPLACEMENT AT E. ABUT.

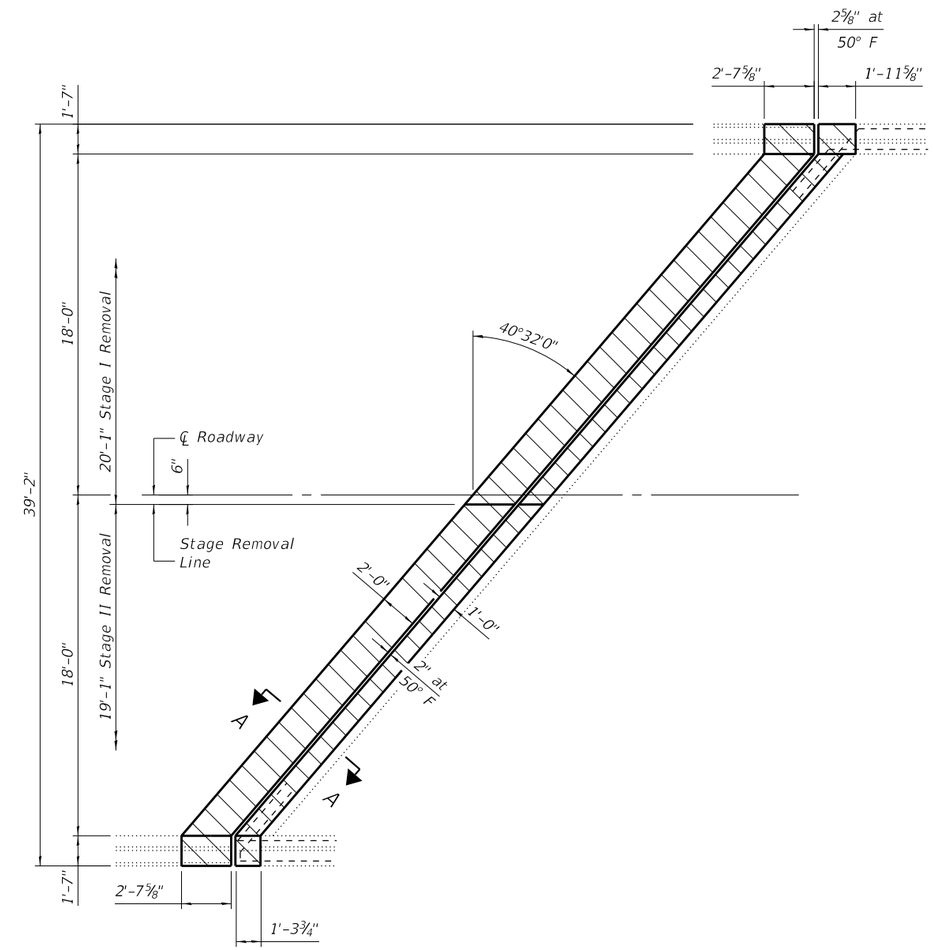

PLAN

CONCRETE REMOVAL AT E. ABUT.

Stage removal dimensions are shown
for the EB structure. WB is similar.

TWO ABUTMENTS BILL OF MATERIAL

	Bar	No.	Size	Length	Shape
*	a(E)	32	#5	25'-3"	
	a1(E)	12	#6	4'-0"	
	d(E)	16	#5	3'-0"	
	d1(E)	16	#5	2'-7"	
	d2(E)	16	#4	3'-0"	
	d3(E)	16	#4	4'-1"	
*	h(E)	24	#6	25'-3"	
	Concrete Removal			Cu. Yd.	14.3
	Concrete Superstructure			Cu. Yd.	15.5
	Reinforcement Bars, Epoxy Coated			Pound	2000

* Cut to fit as required.

Notes:
EB structure shown, WB similar.
Hatched areas indicate Concrete Removal.
For Section view, see sheet 7 of 30.
Dimensions are based on a Rolled Rail Strip Seal Joint.
If the contractor elects to use the Welded Rail Strip Seal Joint, deck dimensions may require adjustments to satisfy the details on sheet 8 of 30.

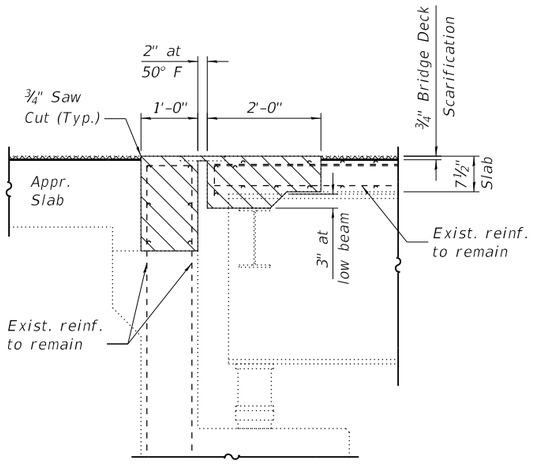

SECTION A-A
(Dims. at Rt. L's)

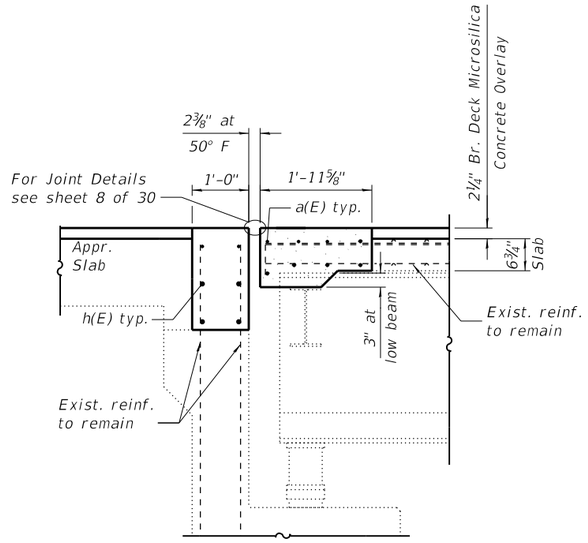

SECTION B-B
(Dims. at Rt. L's)

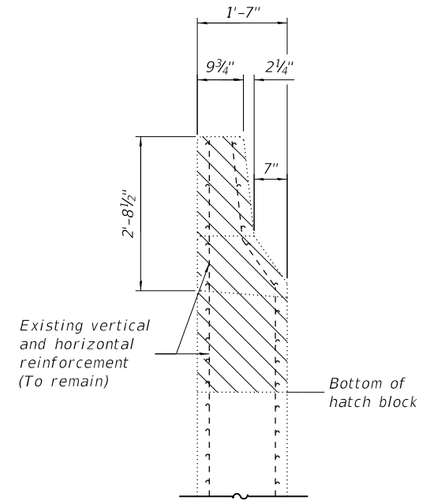

SECTION THRU WINGWALL
(Showing Removal)

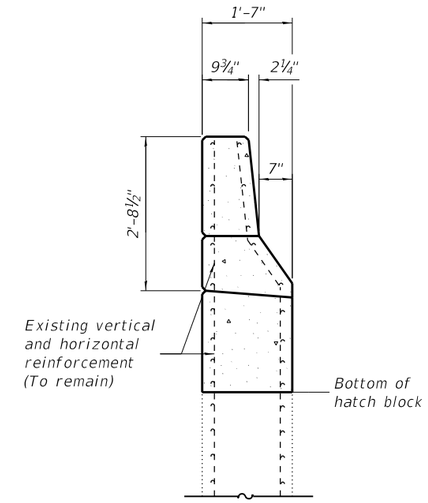

SECTION THRU WINGWALL
(Proposed)

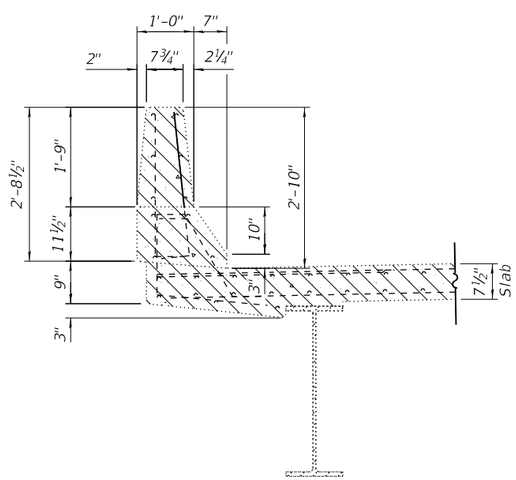

SECTION THRU
BRIDGE PARAPET
(Showing Removal)

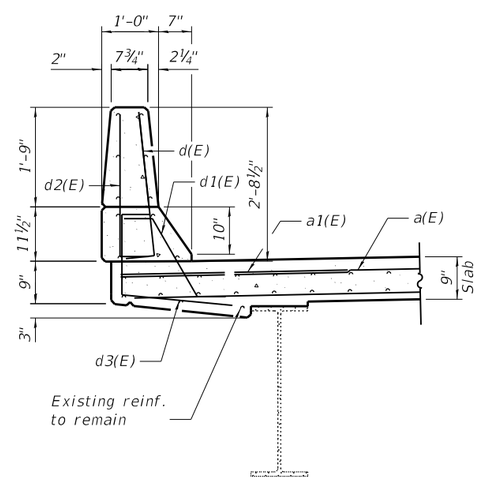

SECTION THRU
BRIDGE PARAPET
(Proposed)

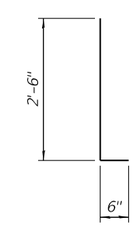

BARS d(E) & d2(E)

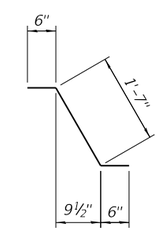

BAR d1(E)

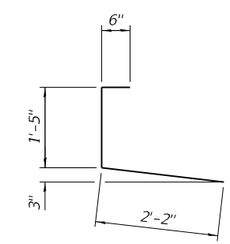

BAR d3(E)

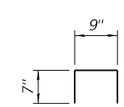

BAR u(E)

Notes:
Hatched areas indicate Concrete Removal. Cross Hatched areas indicate Bridge Deck Scarification.
Dimensions are based on a Rolled Rail Strip Seal Joint. If the Contractor elects to use the Welded Rail Strip Seal Joint, deck dimensions may require adjustments to satisfy the details on sheet 8 of 30.

MODEL: Default
FILE NAME: P:\2019\19038BWO6 I-74 Bridge PSEs4 CADD - DWG4.4 Struc\0900021-0022\0900021-0022-68F54-007 Abutment Joint Repair Details.dgn

TWM ENGINEERING & GEOSPATIAL SERVICES	TWM, INC. WWW.TWM-INC.COM IL DESIGN FIRM LICENSE NO: 184-001220	USER NAME = ckoltveit	DESIGNED - CDK	REVISED -	STATE OF ILLINOIS DEPARTMENT OF TRANSPORTATION	JOINT REPLACEMENT DETAILS SN 090-0021 AND SN 090-0022	F.A.I. RTE.	SECTION	COUNTY	TOTAL SHEETS	SHEET NO.
			CHECKED - ALN	REVISED -			74	90-15[HB(1-4);VB;B]BP,BJR,BRR	TAZEWELL	192	88
		PLOT SCALE = 0:2.0000 ':' / in.	DRAWN - CDK	REVISED -					CONTRACT NO. 68F54		
		PLOT DATE = 12/1/2020	CHECKED - ALN	REVISED -		SHEET 7 OF 30 SHEETS		ILLINOIS	FED. AID PROJECT		

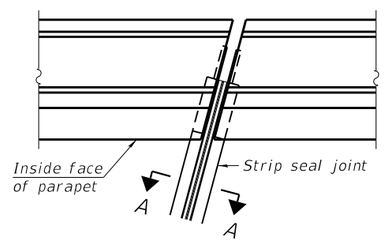

FOR SKEWS ≤ 30°

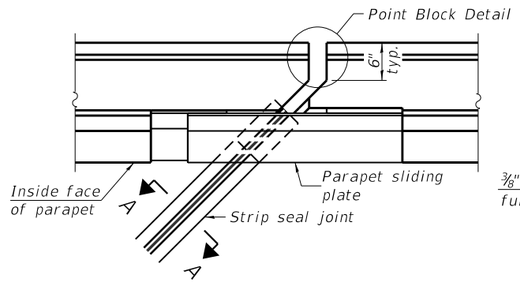

FOR SKEWS > 30°

PLAN AT PARAPET

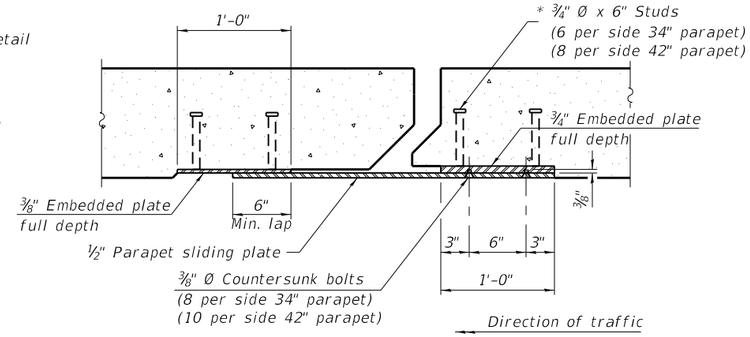

SECTION B-B

Notes:

The strip seal shall be made continuous and shall have a minimum thickness of ¼". The configuration of the strip seal shall match the configuration of the locking edge rails. Open or "webbed" strip seal gland configurations are not permitted. The gland shall be sized for a maximum rated movement of 4 inches.

The locking edge rails depicted are configured for typical applications and are conceptual only. The actual configuration of the locking edge rails and matching strip seal may vary from manufacturer to manufacturer provided they fit the application and meet the minimum anchorage shown. Flanged edge rails, however, will not be allowed. Locking edge rails may exceed the 4½" maximum depth provided the anchorage system is revised according to the manufacturer's recommendation.

The manufacturer's recommended installation methods shall be followed.

All steel components shall be galvanized after fabrication according to Article 520.03 of the Standard Specifications.

The Maximum space between locking edge rail segments shall be 3/16" and sealed with a suitable sealant; however, any rail joint within 10' measured perpendicular to the face of the curb or parapet shall be welded as shown in the locking edge rail splice detail.

Cost of parapet sliding plates, embedded plates, and anchorage studs included with Preformed Joint Strip Seal.

34" F-shape barrier shown, 42" F-shape similar as noted.

The concrete opening below the strip seal will vary based on the locking edge rail chosen by the Contractor. Deck and parapet lengths shown elsewhere in the plans are dimensioned to the concrete opening, not the joint opening, and are based on the rolled locking edge rail. If the Contractor elects to use a different locking edge rail, dimensional adjustments may be required. One exception to this would be the strip seal joint at the end of the precast bridge approach slab. For these cases the pavement connector length shall be adjusted, not the length of the bridge approach slab.

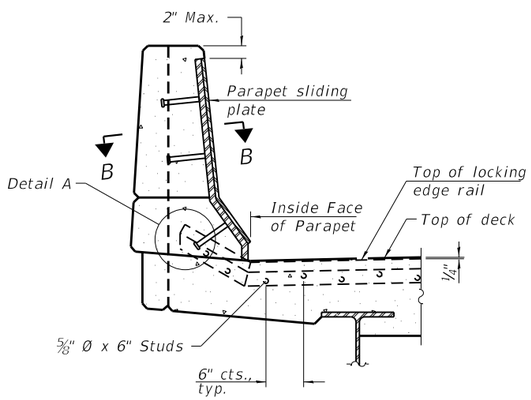

ELEVATION AT PARAPET

(Skews > 30° shown. Skews ≤ 30° similar except as shown in plan view.)

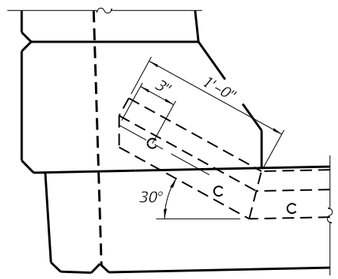

DETAIL A

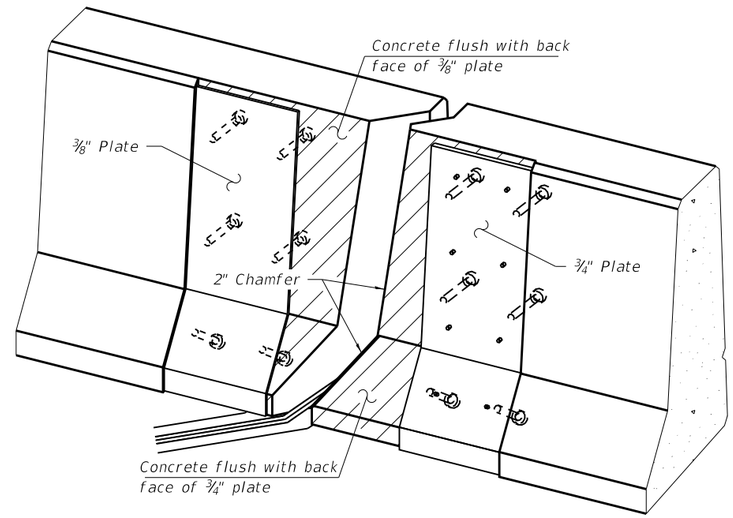

TRIMETRIC VIEW

(Showing embedded plates only)

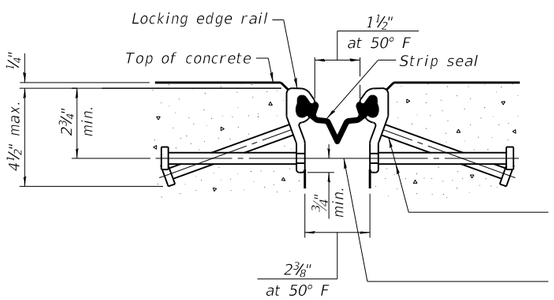

SHOWING ROLLED RAIL JOINT

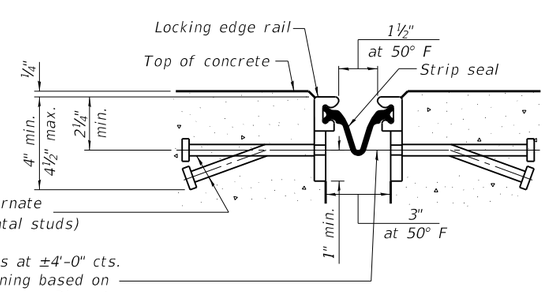

SHOWING WELDED RAIL JOINT

* ⅝" Ø x 6" studs @ 6" cts. (alternate angled/bent studs with horizontal studs)

⅜" ϕ threaded rods in 7/16" ϕ holes at ±4'-0" cts. for holding the proper joint opening based on the temperature during the deck pour. Place to miss studs. All rods shall be burned, or sawed off flush with the plates after concrete is set.

SECTION A-A

* Granular or solid flux filled headed studs conforming to Article 1006.32 of the Std. Specs., automatically end welded.

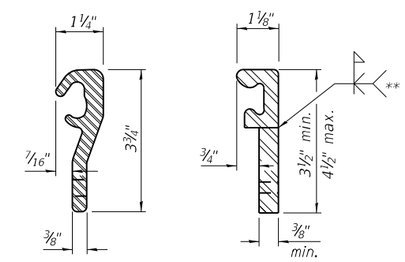

ROLLED (EXTRUDED) RAIL

WELDED RAIL

LOCKING EDGE RAILS

** Back gouge not required if complete joint penetration is verified by mock-up.

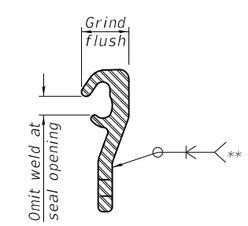

LOCKING EDGE RAIL SPLICE

The inside of the locking edge rail groove shall be free of weld residue. Rolled rail shown, welded rail similar.

TOTAL BILL OF MATERIAL

Item	Unit	Total
Preformed Joint Strip Seal	Foot	198

EJ-SS 8-11-17

MODEL: Default
FILE NAME: P:\2019\190388\WO6 I-74 Bridge PSEs\4 CADD - DWG\4.4 Struc\0900021-0022\0900021-0022-68F54-008 Preformed Joint Strip Seal.dgn

TWM ENGINEERING GEOSPATIAL SERVICES
TWM, INC. WWW.TWM-INC.COM
IL DESIGN FIRM LICENSE NO: 184-001220

USER NAME = ckoltveit	DESIGNED - DRA	REVISED -	
	CHECKED - CDK	REVISED -	
PLOT SCALE = 0:2.0000 ':" / in.	DRAWN - DRA	REVISED -	
PLOT DATE = 12/1/2020	CHECKED - CDK	REVISED -	

STATE OF ILLINOIS
DEPARTMENT OF TRANSPORTATION

PREFORMED JOINT STRIP SEAL
STRUCTURE NO. 090-0021 & 090-0022
SHEET 8 OF 30 SHEETS

F.A.I. RTE.	SECTION	COUNTY	TOTAL SHEETS	SHEET NO.
74	90-15[HB(1-4);VB;B]BP,BJR,BRR	TAZEWELL	192	89
		CONTRACT NO. 68F54		
	ILLINOIS	FED. AID PROJECT		

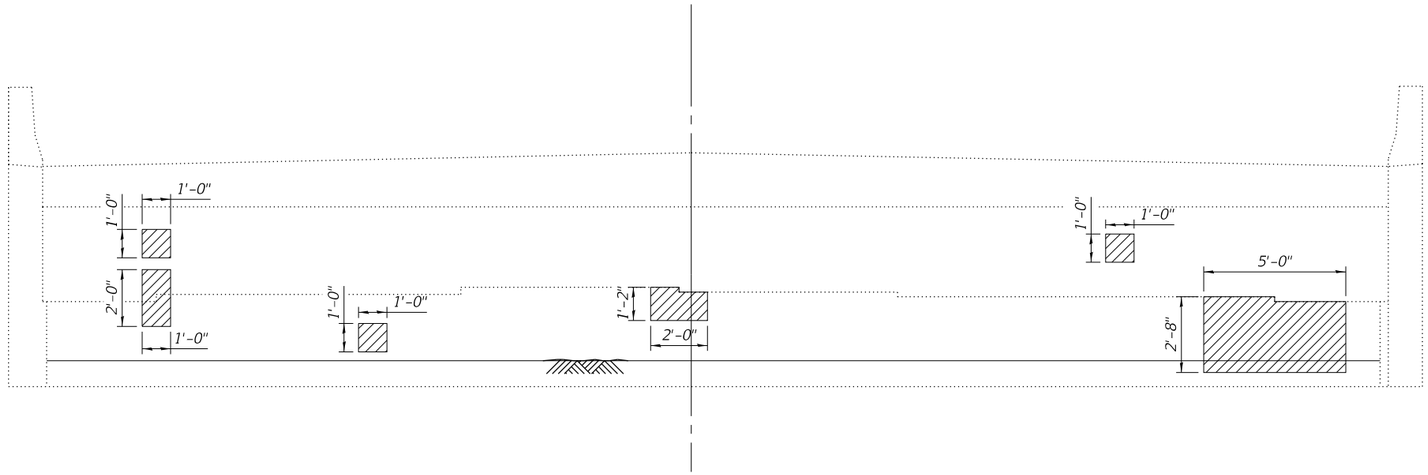

ELEVATION - REPAIR

- Structural Repair of Concrete
(Depth equal to or less than 5 inches)

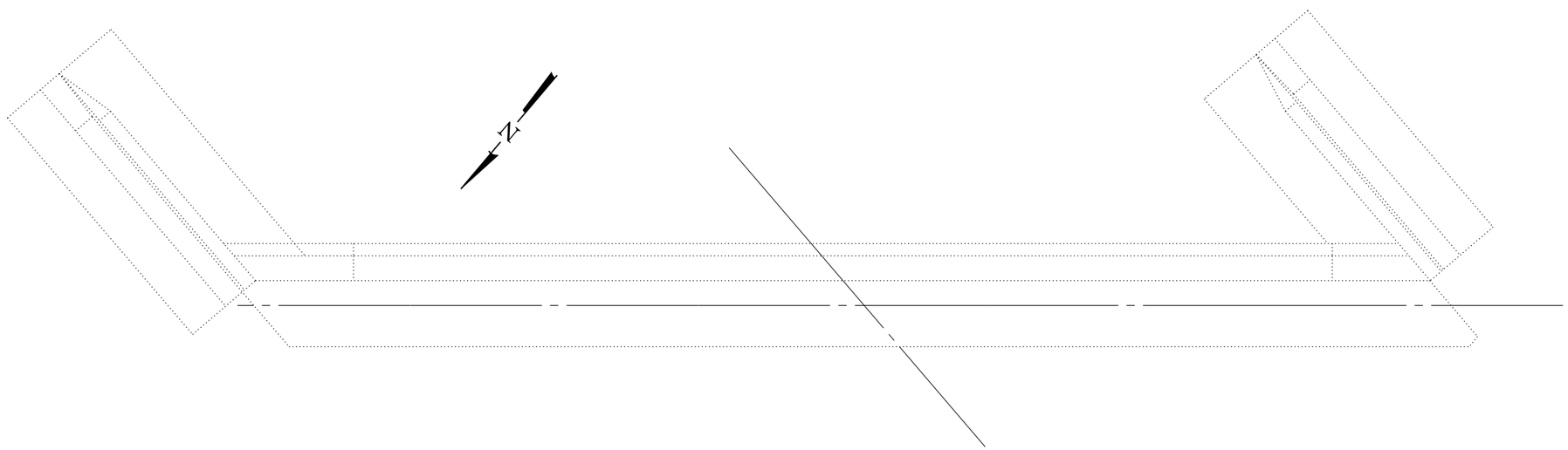

PLAN - REPAIR

BILL OF MATERIAL

Item	Unit	Quantity
Structural Repair of Concrete (Depth Equal to or Less than 5 Inches)	Sq. Ft.	20.7

MODEL: Sheet
FILE NAME: P:\2019\190388\W06 I-74 Bridge PSE\s4 CADD - DWG\4.4 Struc\0900021-0022\0900021-0022-68F54-009 E. Abutment Repair Details 0021.dgn

TWM ENGINEERING GEOSPATIAL SERVICES
TWM, INC.
WWW.TWM-INC.COM
IL DESIGN FIRM LICENSE NO: 184-001220

USER NAME = ckoltveit	DESIGNED - NP	REVISED -	
	CHECKED - MJJ	REVISED -	
PLOT SCALE = 0:2.0000 ':" / in.	DRAWN - NP	REVISED -	
PLOT DATE = 12/1/2020	CHECKED - MJJ	REVISED -	

STATE OF ILLINOIS
DEPARTMENT OF TRANSPORTATION

E. ABUTMENT CONCRETE REPAIR DETAILS
STRUCTURE NO. 090-0021

SHEET 9 OF 30 SHEETS

F.A.I. RTE.	SECTION	COUNTY	TOTAL SHEETS	SHEET NO.
74	90-15[HB(1-4);VB;B]BP,BJR,BRR	TAZEWELL	192	90
		CONTRACT NO. 68F54		
	ILLINOIS	FED. AID PROJECT		

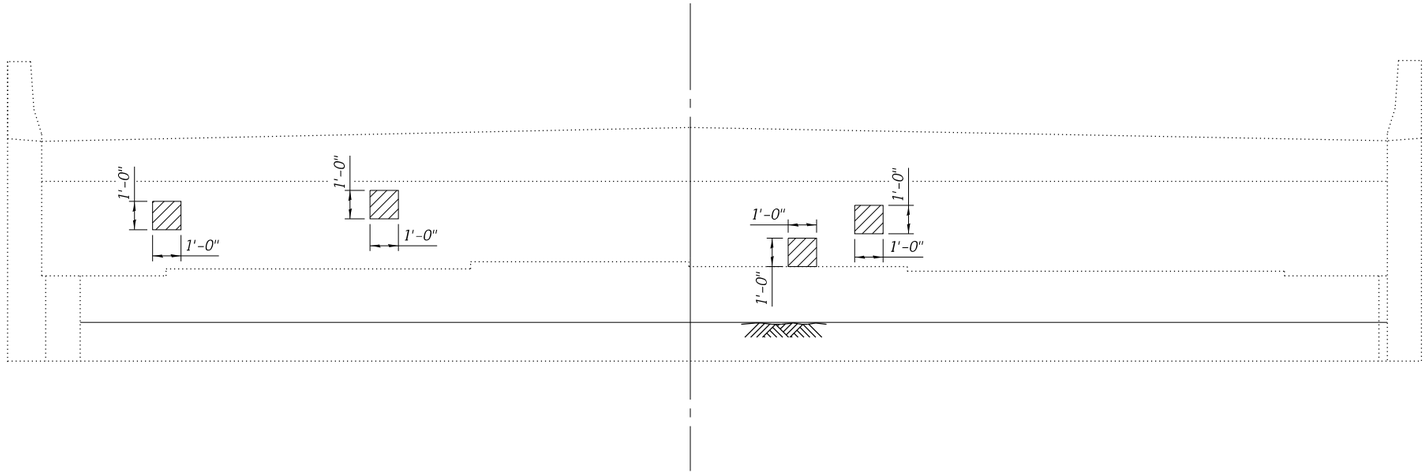

ELEVATION - REPAIR

- Structural Repair of Concrete
(Depth equal to or less than 5 inches)

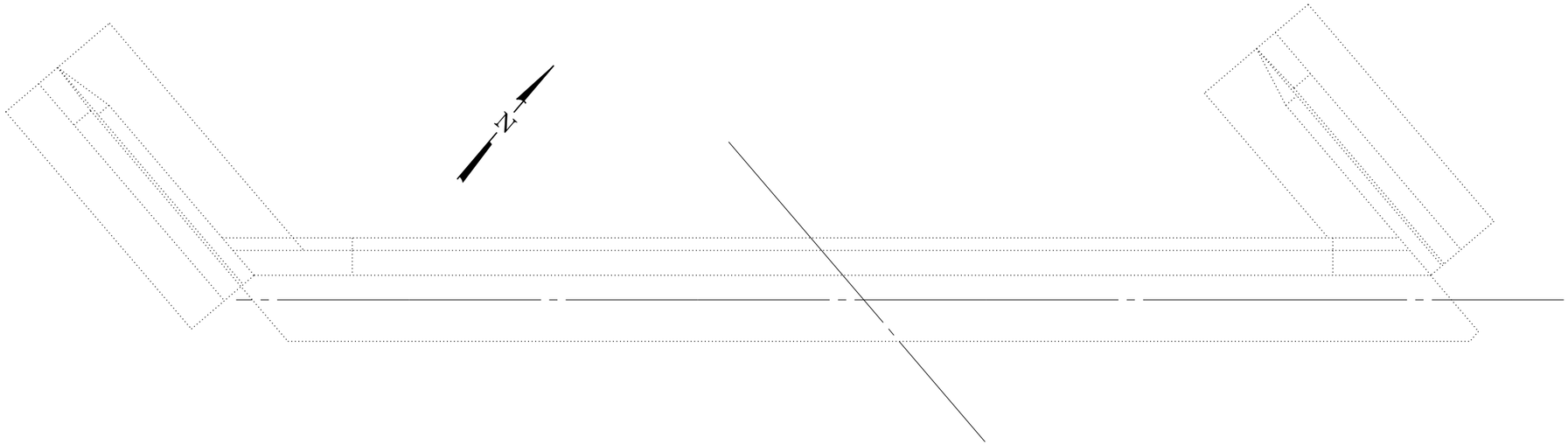

PLAN - REPAIR

BILL OF MATERIAL

Item	Unit	Quantity
Structural Repair of Concrete (Depth Equal to or Less than 5 Inches)	Sq. Ft.	4.0

MODEL: Sheet
FILE NAME: P:\2019\190388\W06 I-74 Bridge PSE\04 CADD - DWG\4.4 Struc\0900021-0022\0900021-0022-68F54-010_W. Abutment Repair Details 0021.dgn

TWM ENGINEERING GEOSPATIAL SERVICES
TWM, INC.
WWW.TWM-INC.COM
IL DESIGN FIRM LICENSE NO: 184-001220

USER NAME = ckoltveit	DESIGNED - NP	REVISED -	
	CHECKED - MJJ	REVISED -	
PLOT SCALE = 0:2.0000 ':" / in.	DRAWN - NP	REVISED -	
PLOT DATE = 12/1/2020	CHECKED - MJJ	REVISED -	

STATE OF ILLINOIS
DEPARTMENT OF TRANSPORTATION

W. ABUTMENT CONCRETE REPAIR DETAILS
STRUCTURE NO. 090-0021

SHEET 10 OF 30 SHEETS

F.A.I. RTE.	SECTION	COUNTY	TOTAL SHEETS	SHEET NO.
74	90-15[HB(1-4);VB;B]BP,BJR,BRR	TAZEWELL	192	91
		CONTRACT NO. 68F54		
		ILLINOIS	FED. AID PROJECT	

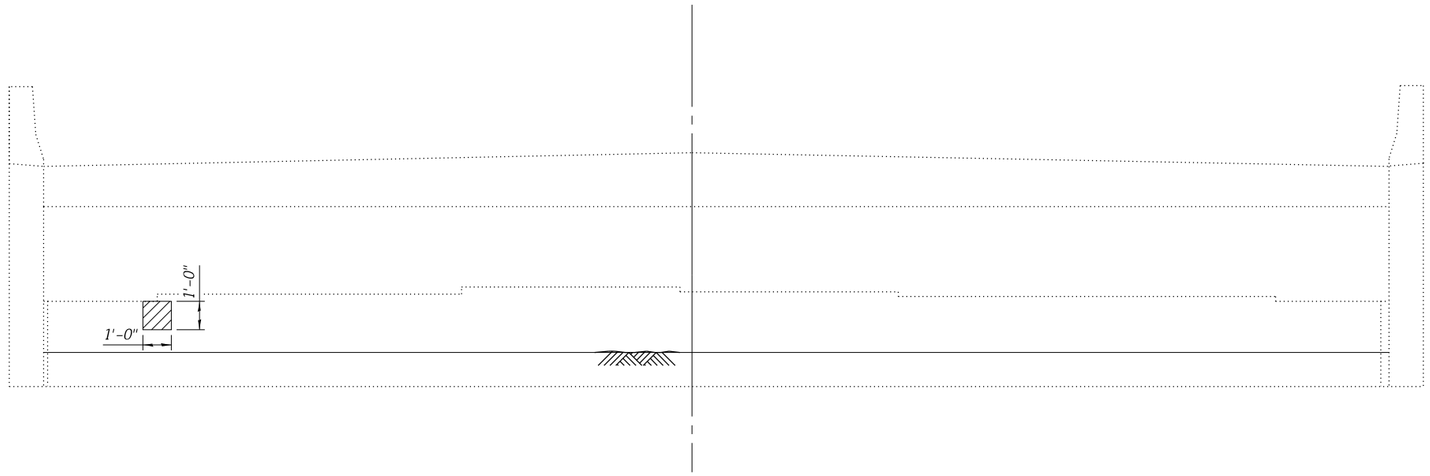

ELEVATION - REPAIR

- Structural Repair of Concrete
(Depth equal to or less than 5 inches)

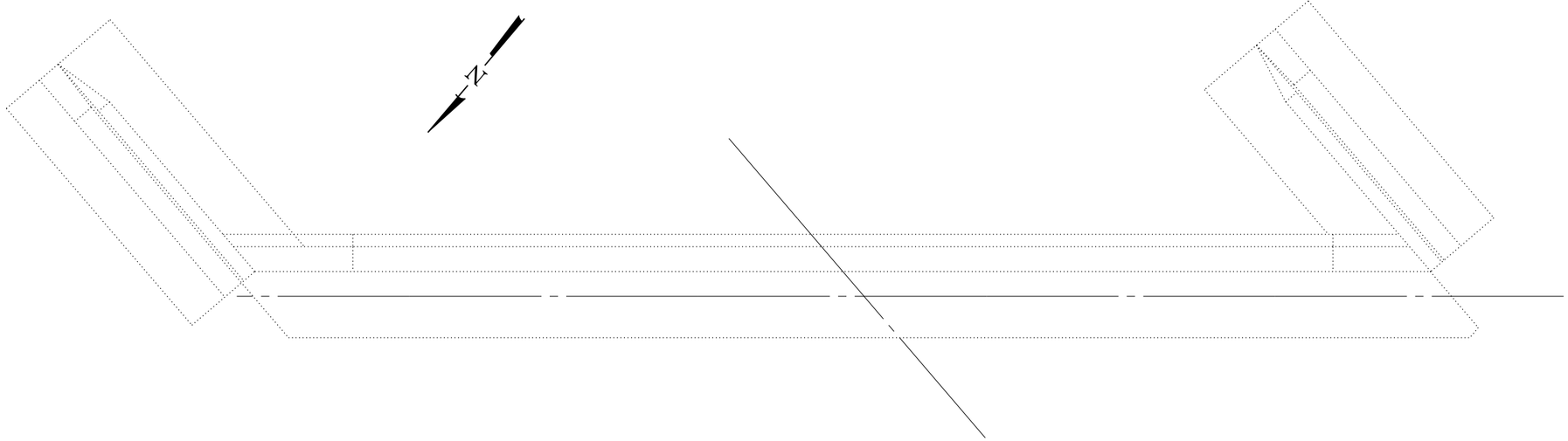

PLAN - REPAIR

BILL OF MATERIAL

Item	Unit	Quantity
Structural Repair of Concrete (Depth Equal to or Less than 5 Inches)	Sq. Ft.	1.0

MODEL: Sheet
FILE NAME: P:\2019\190388\WO6 I-74 Bridge PSEs\4 CADD - DWG\4.4 Struc\0900021-0022\0900021-0022-68F54-011 E. Abutment Repair Details 0022.dgn

TWM ENGINEERING & GEOSPATIAL SERVICES
TWM, INC.
WWW.TWM-INC.COM
IL DESIGN FIRM LICENSE NO: 184-001220

USER NAME = ckoltveit	DESIGNED - NP	REVISED -	
	CHECKED - MJJ	REVISED -	
PLOT SCALE = 0:2.0000 ':" / in.	DRAWN - NP	REVISED -	
PLOT DATE = 12/1/2020	CHECKED - MJJ	REVISED -	

STATE OF ILLINOIS
DEPARTMENT OF TRANSPORTATION

E. ABUTMENT CONCRETE REPAIR DETAILS
STRUCTURE NO. 090-0022

SHEET 11 OF 30 SHEETS

F.A.I. RTE.	SECTION	COUNTY	TOTAL SHEETS	SHEET NO.
74	90-15[HB(1-4);VB;B]BP,BJR,BRR	TAZEWELL	192	92
		CONTRACT NO. 68F54		
	ILLINOIS	FED. AID PROJECT		

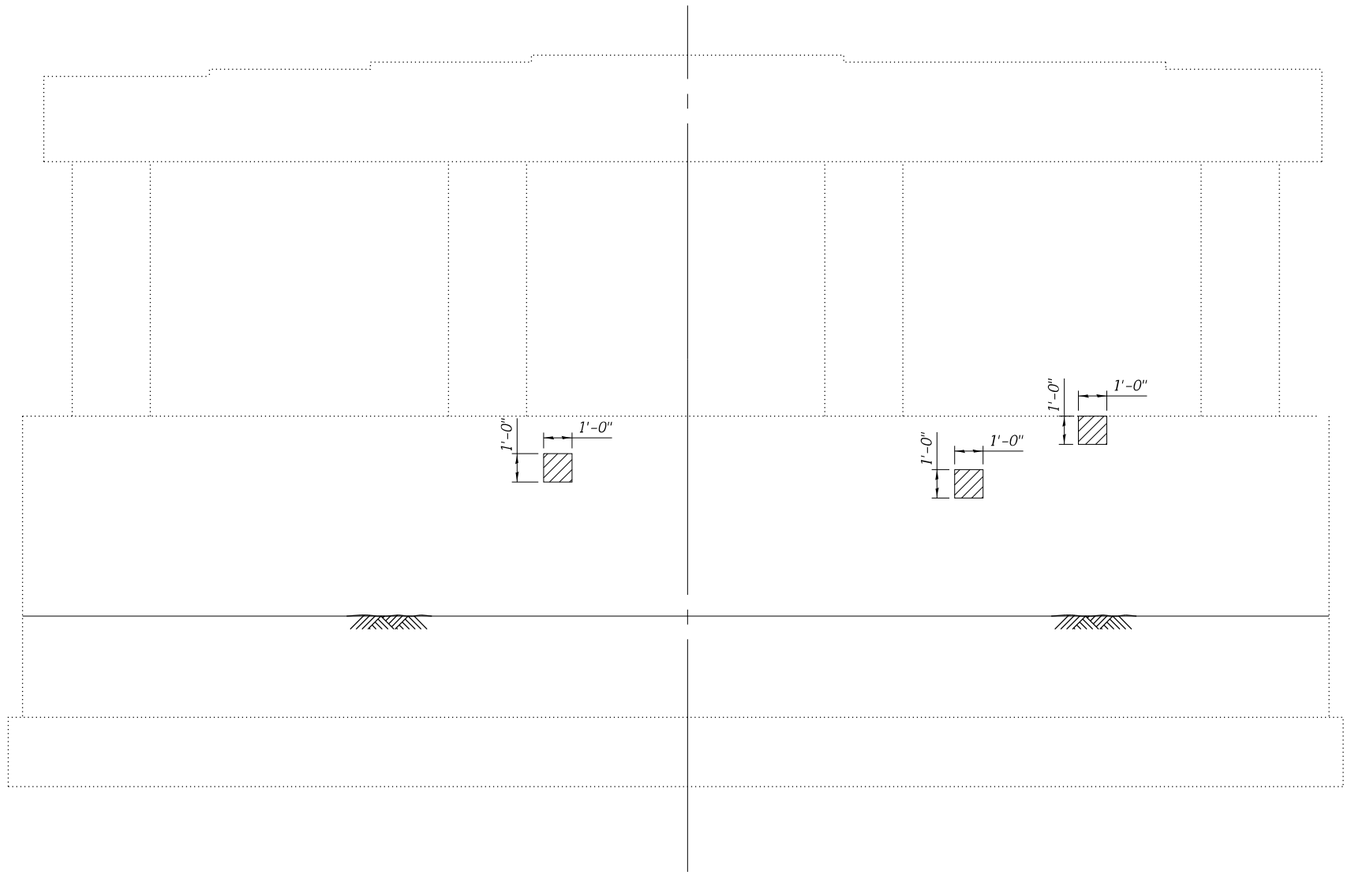

PIER 1 ELEVATION - REPAIR

(Looking West)

- Structural Repair of Concrete (Depth equal to or less than 5 inches)

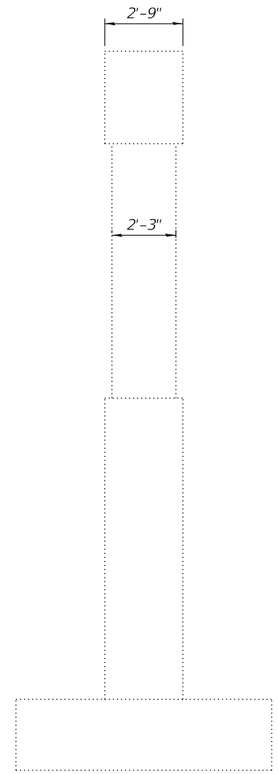

END ELEVATION

(Looking North)

PIER 1 FOOTING PLAN

BILL OF MATERIAL

Item	Unit	Quantity
Structural Repair of Concrete (Depth Equal to or Less than 5 Inches)	Sq. Ft.	3.0

MODEL: Sheet
FILE NAME: P:\2019\190388\W06 I-74 Bridge PSEs\4 CADD - DWG\4.4 Struc\0900021-0022\0900021-0022-68F54-012_Pier 1 Repair Details 0021.dgn

TWM ENGINEERING GEOSPATIAL SERVICES
TWM, INC.
WWW.TWM-INC.COM
IL DESIGN FIRM LICENSE NO: 184-001220

USER NAME = ckoltveit	DESIGNED - NP	REVISED -	
	CHECKED - MJJ	REVISED -	
PLOT SCALE = 0:2.0000 ':" / in.	DRAWN - NP	REVISED -	
PLOT DATE = 12/1/2020	CHECKED - MJJ	REVISED -	

STATE OF ILLINOIS
DEPARTMENT OF TRANSPORTATION

PIER 1 CONCRETE REPAIR DETAILS
STRUCTURE NO. 090-0021

SHEET 12 OF 30 SHEETS

F.A.I. RTE.	SECTION	COUNTY	TOTAL SHEETS	SHEET NO.
74	90-15(HB(1-4);VB;B]BP,BJR,BRR	TAZEWELL	192	93
		CONTRACT NO. 68F54		
	ILLINOIS	FED. AID PROJECT		

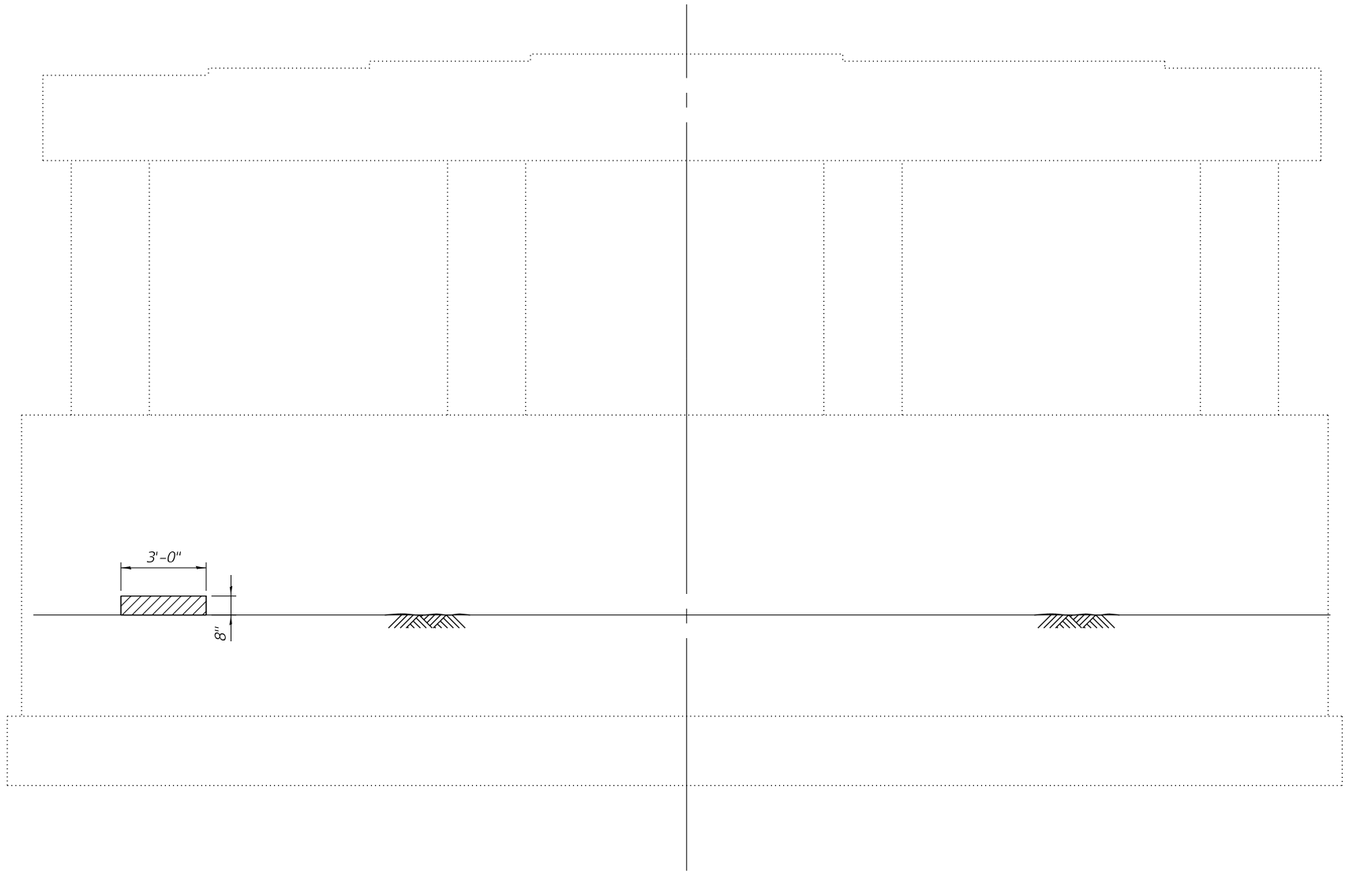

PIER 2 ELEVATION - REPAIR

(Looking West)

- Structural Repair of Concrete
(Depth equal to or less than 5 inches)

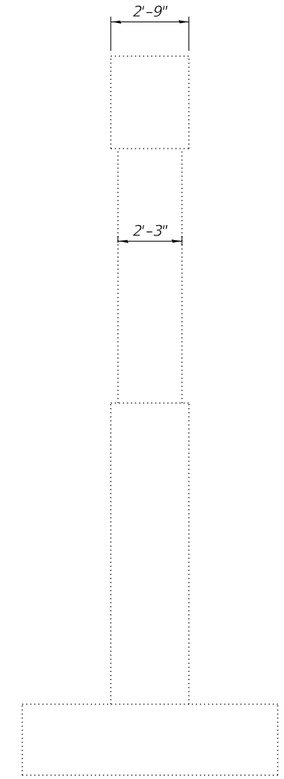

END ELEVATION

(Looking North)

PIER 2 FOOTING PLAN

BILL OF MATERIAL

Item	Unit	Quantity
Structural Repair of Concrete (Depth Equal to or Less than 5 Inches)	Sq. Ft.	3.0

MODEL: Sheet
FILE NAME: P:\2019\19038\WOG I-74 Bridge PSES4 CADD - DWG\4.4 Struc\0900021-0022\0900021-0022-68F54-013 Pier 2 Repair Details 0022.dgn

TWM ENGINEERING GEOSPATIAL SERVICES

TWM, INC.
WWW.TWM-INC.COM
IL DESIGN FIRM LICENSE NO: 184-001220

USER NAME = ckoltveit	DESIGNED - NP	REVISED -	
	CHECKED - MJJ	REVISED -	
PLOT SCALE = 0:2.0000 ':" / in.	DRAWN - NP	REVISED -	
PLOT DATE = 12/1/2020	CHECKED - MJJ	REVISED -	

STATE OF ILLINOIS
DEPARTMENT OF TRANSPORTATION

PIER 2 CONCRETE REPAIR DETAILS
STRUCTURE NO. 090-0022

SHEET 13 OF 30 SHEETS

F.A.I. RTE.	SECTION	COUNTY	TOTAL SHEETS	SHEET NO.
74	90-15[HB(1-4);VB;B]BP,BJR,BRR	TAZEWELL	192	94
		CONTRACT NO. 68F54		
		ILLINOIS FED. AID PROJECT		

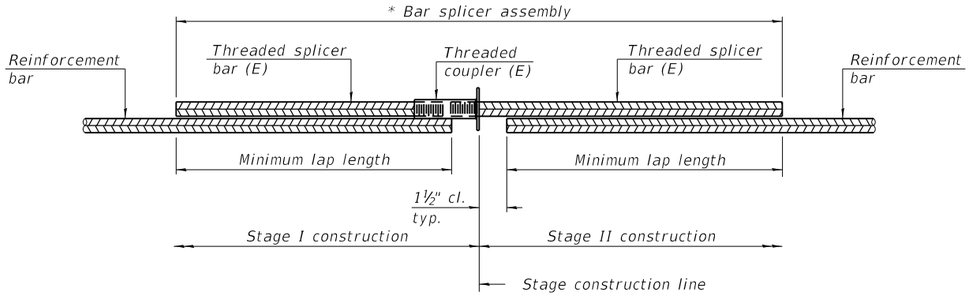

STANDARD BAR SPLICER ASSEMBLY PLAN

(All components shall be provided from one supplier)

Threaded splicer bar length = min. lap length + 1½" + thread length

* Epoxy not required on Bar Splicer Assembly components used in conjunction with black bars.

Location	Bar size	No. assemblies required	Minimum lap length
Deck	#5	32	3'-6"
Abut. Hatch Block	#6	24	4'-0"

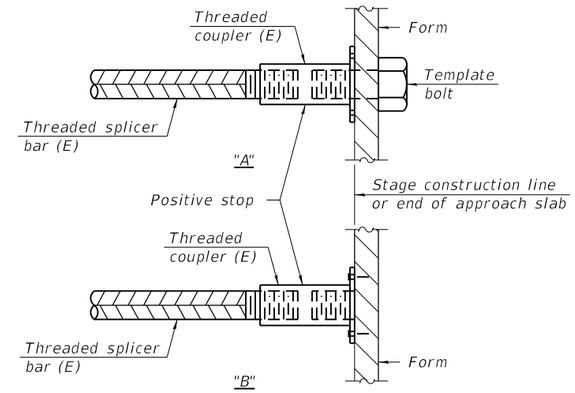

INSTALLATION AND SETTING METHODS

"A" : Set bar splicer assembly by means of a template bolt.
"B" : Set bar splicer assembly by nailing to wood forms or cementing to steel forms.
(E) : Indicates epoxy coating.

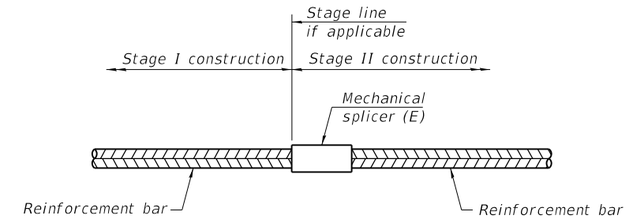

STANDARD MECHANICAL SPLICER

Location	Bar size	No. assemblies required

Notes:
Splicer bars shall be deformed with threaded ends and have a minimum 60 ksi yield strength.
All reinforcement shall be lapped and tied to the splicer bars.
Bar splicer assemblies shall be epoxy coated according to the requirements for reinforcement bars. See Section 508 of the Standard Specifications.
See approved list of bar splicer assemblies and mechanical splicers for alternatives.

BSD-1 1-1-2020

MODEL: Default
FILE NAME: P:\2019\19038BWO6 I-74 Bridge PSEs\4 CADD - DWG\4.4 Struc\0900021-0022\0900021-0022-68F54-014 Bar Splicer Assembly Details.dgn

TWM ENGINEERING GEOSPATIAL SERVICES
TWM, INC. WWW.TWM-INC.COM
IL DESIGN FIRM LICENSE NO: 184-001220

USER NAME = ckoltveit	DESIGNED - DRA	REVISED -
	CHECKED - CDK	REVISED -
PLOT SCALE = 0:2.0000 ':" / in.	DRAWN - DRA	REVISED -
PLOT DATE = 12/1/2020	CHECKED - CDK	REVISED -

STATE OF ILLINOIS
DEPARTMENT OF TRANSPORTATION

BAR SPLICER ASSEMBLY AND MECHANICAL SPLICER DETAILS
STRUCTURE NO. 090-0021 & 090-0022

SHEET 14 OF 30 SHEETS

F.A.I. RTE.	SECTION	COUNTY	TOTAL SHEETS	SHEET NO.
74	90-15[HB(1-4);VB;B]BP,BJR,BRR	TAZEWELL	192	95
		CONTRACT NO. 68F54		
		ILLINOIS	FED. AID PROJECT	

Bench Mark: Chiseled "L" S.W. wingwall S.N. 090-0021, Elev. 742.43

Existing Structures: S.N. 090-0021 & 090-0022 Built in 1961 as F.A.I. Rte. 74, Section 90-15VB at Sta. 644+27.11. Existing structures are 3-span reinforced concrete deck on steel WF beams supported on spill-thru pile bent abutments and pile supported muti-column piers. Each structure 35'-8" O.-O. deck, 178'-3" Bk.-Bk. abutments. Concrete deck to be removed and replaced. Traffic to be maintained utilizing cross overs.

No salvage

STATE OF ILLINOIS
DEPARTMENT OF TRANSPORTATION

ROUTE NO.	SECTION	COUNTY	TOTAL SHEETS	SHEET NO.
F.A.I. 74	90 (15VB-1) I-1	TAZEWELL	101	55
FED. ROAD DIST. NO. 7	ILLINOIS	FED. AID PROJECT-		

SHEET NO. 1
22 SHEETS

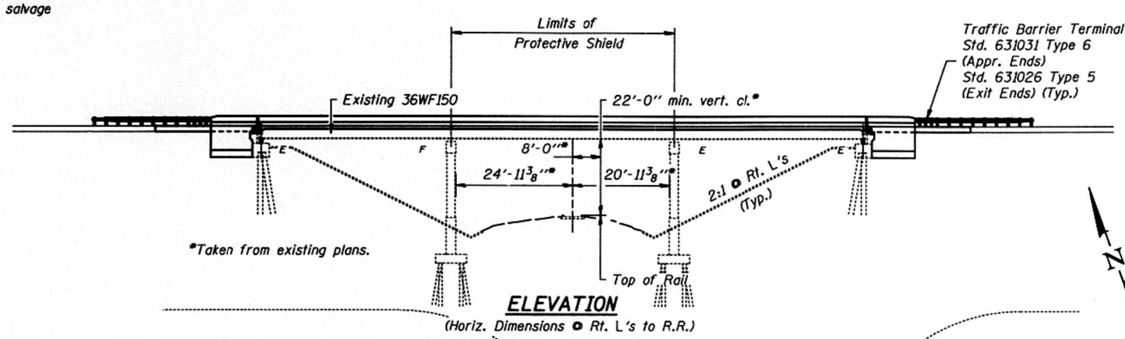

ELEVATION

(Horiz. Dimensions ⊙ Rt. L's to R.R.)

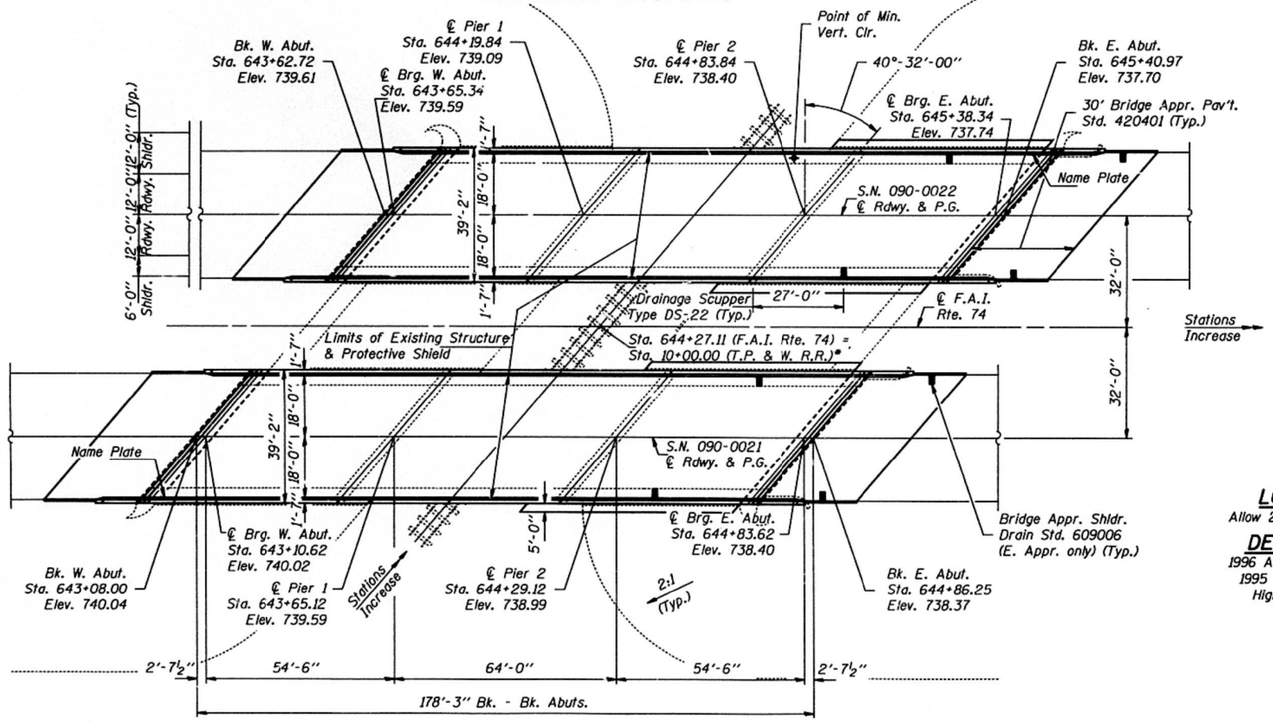

PLAN

DESIGNED	Nicholas J. Lovell
CHECKED	Chad J. Fursting
DRAWN	Michael R. Gillette
CHECKED	NJS CJF

January 26, 2000
EXAMINED — ENGINEER OF BRIDGE DESIGN
PASSED — ENGINEER OF BRIDGES AND STRUCTURES

STATE OF ILLINOIS RALPH E. ANDERSON 081-004625 PROFESSIONAL ENGINEER STRUCTURAL

EXPIRES 11-30-2000

FOR INFORMATION ONLY

STATION 644+27.11
REBUILT BY
STATE OF ILLINOIS
F.A.I. RT. 74 SECTION 90(15VB-1)I-1
F.A. PROJECT:
LOADING HS20 & ALT.
STR. NO. 090-0021

NAME PLATE - E.B. LANES

See Std. 515001

STATION 644+27.11
REBUILT BY
STATE OF ILLINOIS
F.A.I. RT. 74 SECTION 90(15VB-1)I-1
F.A. PROJECT:
LOADING HS20 & ALT.
STR. NO. 090-0022

NAME PLATE - W.B. LANES

See Std. 515001

Note:
Existing Name Plate is to be cleaned and relocated next to the new Name Plate. Included in cost of Name Plates.

TOTAL BILL OF MATERIAL

ITEM	UNIT	SUPER	SUB	TOTAL
Removal of Existing Concrete Deck	Each	2		2
Concrete Removal	Cu. Yd.		45.2	45.2
Concrete Structures	Cu. Yd.		65.8	65.8
Concrete Superstructure	Cu. Yd.	432.7		432.7
Elastomeric Bearing Assembly Type I	Each	24		24
Neoprene Expansion Joint 2"	Foot	200		200
Bridge Deck Grooving	Sq. Yd.	1324		1324
Furnishing and Erecting Structural Steel	Pound	11960		11960
Stud Shear Connectors	Each	6156		6156
Reinforcement Bars, Epoxy Coated	Pound	99800	9360	109160
Name Plates	Each	2		2
Drainage Scuppers	Each	4		4
Protective Coat	Sq. Yd.	1727		1727
Jack and Remove Existing Bearings	Each	24		24
Structure Excavation	Cu. Yd.		201.4	201.4
Structural Steel Removal	Pound	7060		7060
Slopewall Removal	Sq. Yd.		304.1	304.1
Fabric Formed Concrete Revetment Mats	Sq. Yd.		272.0	272.0
Bridge Seat Sealer	Sq. Ft.		494	494
Protective Shield	Sq. Yd.	557		557
Slope Wall 4"	Sq. Yd.		166.0	166.0
Controlled Low Strength Material	Cu. Yd.		1.0	1.0

LOADING HS20 & ALT.

Allow 25 psf for future wearing surface.

DESIGN SPECIFICATIONS

1996 AASHTO with 1997 and 1998 Interims
1995 Seismic Retrofitting Guidelines for Highway Bridges FHWA/RD-94/052

DESIGN STRESSES

FIELD UNITS (Existing Structure)
f_c = 1,400 psi
f_s = 20,000 psi (reinforcement)
f_y = 33,000 psi (structural steel)
n = 10

FIELD UNITS (New Construction)
f'_c = 3,500 psi
f_y = 60,000 psi (reinforcement)
f_y = 36,000 psi M270 GR36 (structural steel)

SEISMIC DATA

Seismic Performance Category (SPC) = A
Bedrock Acceleration Coefficient (A) = 4.3%g
Site Coefficient (S) = 1.2

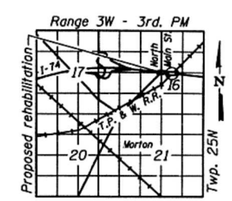

LOCATION SKETCH

GENERAL PLAN
I-74 OVER
T.P. & W. RAILROAD
F.A.I. ROUTE 74 - SECTION 90(15VB)I-1
TAZEWELL COUNTY
STATION 644+27.11
STRUCTURE NO. 090-0021 (E.B.)
STRUCTURE NO. 090-0022 (W.B.)

ROUTE NO.	SECTION	COUNTY	TOTAL SHEETS	SHEET NO.
F.A.I. 74	90 (15VB-1) I-1	TAZEWELL	101	60
FED. ROAD DIST. NO. 7		ILLINOIS	FED. AID PROJECT-	

SHEET NO. 6
22 SHEETS

STATE OF ILLINOIS
DEPARTMENT OF TRANSPORTATION

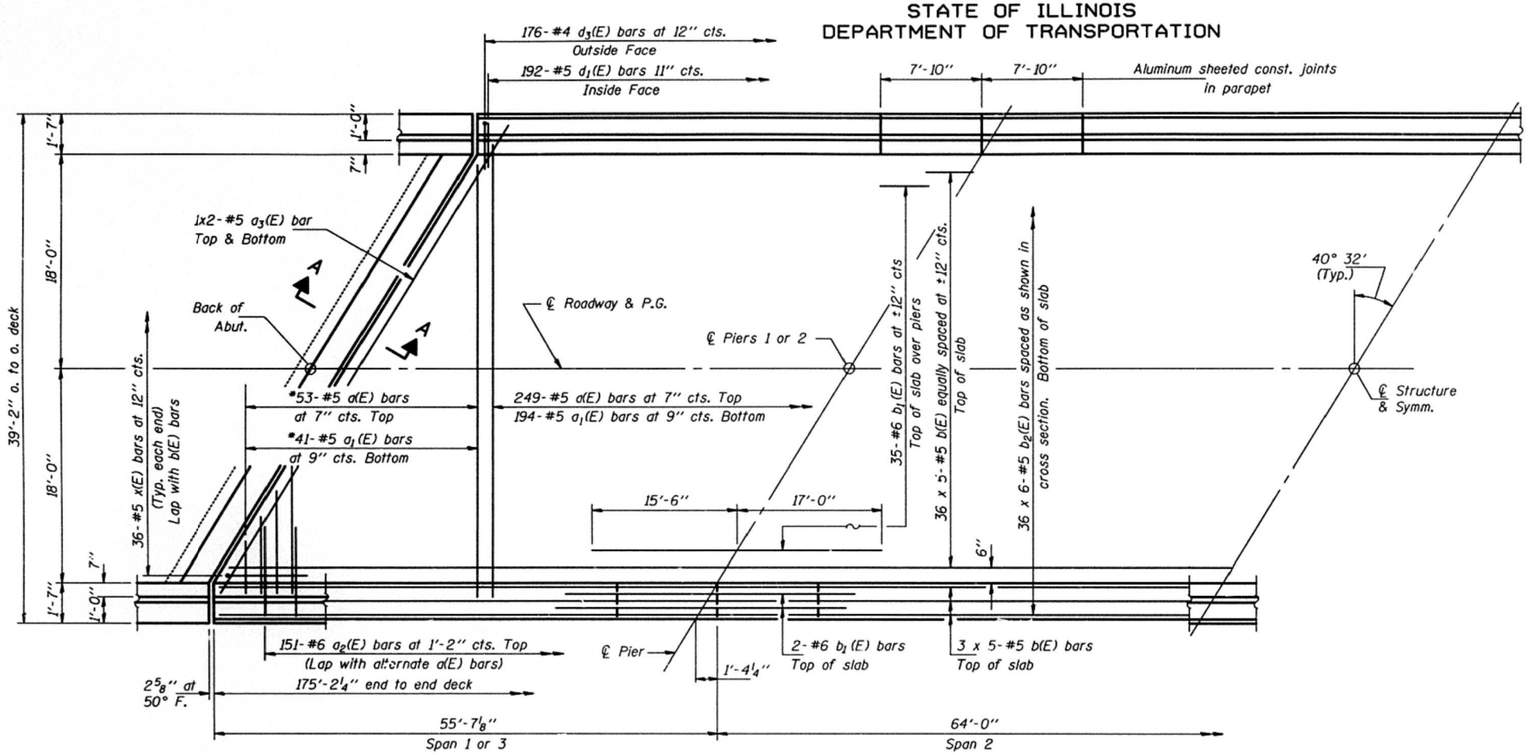

* Order a(E) & a1(E) bars full length. Cut to fit skew and use remainder of bars in opposite end.

HALF PLAN

Notes:
See sheet 7 of 22 for Section A-A, superstructure details, parapet reinforcement and Bill of Material.
See sheet 1 of 22 for scupper location.
Bars indicated thus 35 x 5-#5 etc. indicates 35 lines of bars with 5 lengths per line.
Reinforcement bars designated (E) shall be epoxy coated.

MIN. BAR LAP

#5 bar = 1'-8"

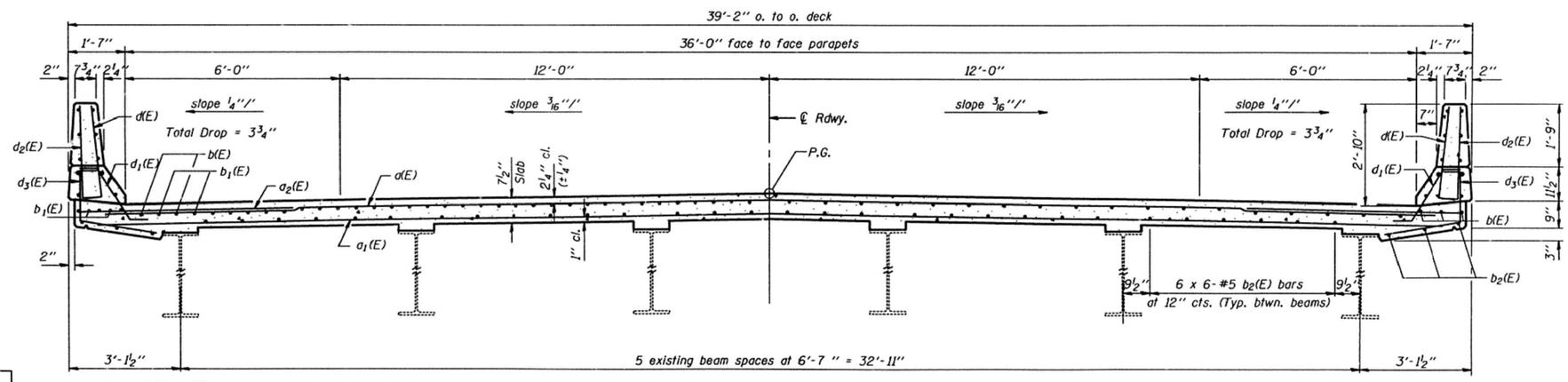

NEAR PIER

NEAR MIDSPAN

CROSS SECTION

DESIGNED	Nicholas J. Sovell
CHECKED	Chad Fuesting
DRAWN	Michael R. Gillette
CHECKED	C.J.F. N.J.S.

January 26, 2000
EXAMINED Thomas J. Domagalski — ENGINEER OF BRIDGE DESIGN
PASSED Ralph E. Anderson — ENGINEER OF BRIDGES AND STRUCTURES

FOR INFORMATION ONLY

SUPERSTRUCTURE
F.A.I. RTE. 74 - SEC. 90(15VB-1)I-1
TAZEWELL COUNTY
STATION 644+27.11

MODEL: Default
FILE NAME: P:\2019\19038\WOG L-74 Bridge PSES\4 CADD - DWG\4.4 Struct\090021-0022\090021-0022-68F54-016 Existing Superstructure.dgn

TWM ENGINEERING GEOSPATIAL SERVICES
TWM, INC. WWW.TWM-INC.COM
IL DESIGN FIRM LICENSE NO: 184-001220

USER NAME = ckoltveit	DESIGNED - NP	REVISED -
	CHECKED - ALN	REVISED -
PLOT SCALE = 0:2.0000 ':" / in.	DRAWN - NP	REVISED -
PLOT DATE = 12/1/2020	CHECKED - ALN	REVISED -

STATE OF ILLINOIS
DEPARTMENT OF TRANSPORTATION

EXISTING SUPERSTRUCTURE
SN 090-0021 & 090-0022
SHEET 16 OF 30 SHEETS

F.A.I. RTE.	SECTION	COUNTY	TOTAL SHEETS	SHEET NO.
74	90-15[HB(1-4);VB;B]BP,BJR,BRR	TAZEWELL	192	97
		CONTRACT NO. 68F54		
		ILLINOIS	FED. AID PROJECT	

ROUTE NO.	SECTION	COUNTY	TOTAL SHEETS	SHEET NO.
F.A.I. 74	90 (15VB-1) I-1	TAZEWELL	101	61
FED. ROAD DIST. NO. 7		ILLINOIS	FED. AID PROJECT-	

SHEET NO. 7
22 SHEETS

STATE OF ILLINOIS
DEPARTMENT OF TRANSPORTATION

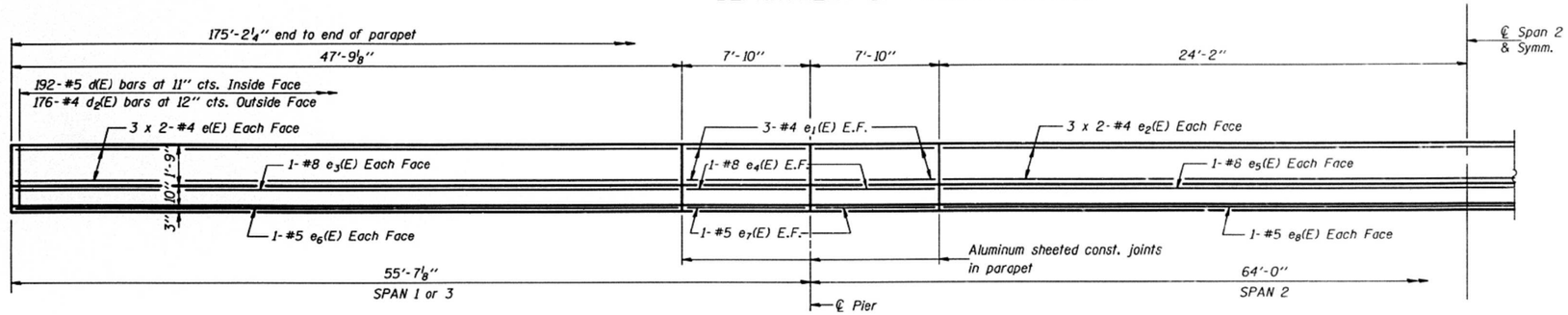

HALF INSIDE ELEVATION OF PARAPET

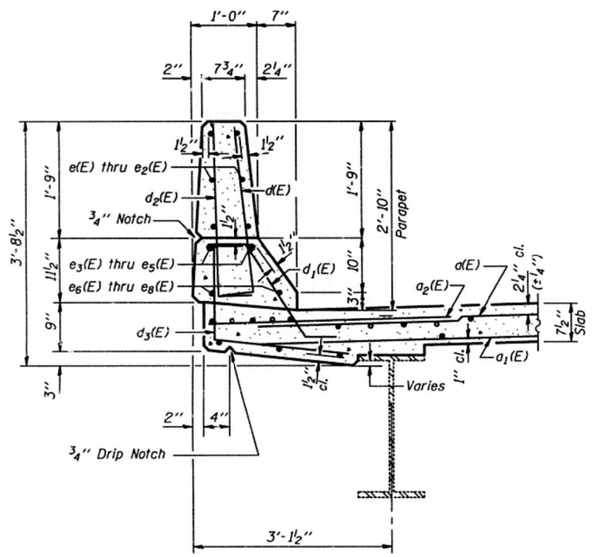

SECTION THRU PARAPET

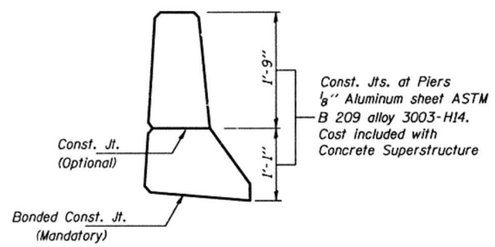

PARAPET JOINT DETAILS

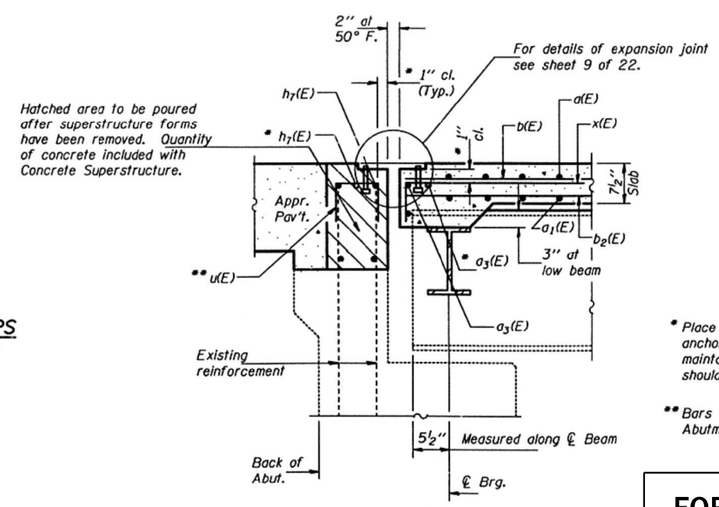

SECTION A-A
(Dimensions are at Rt. L's except as shown)

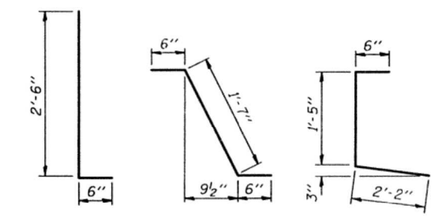

BARS d(E) & d2(E) BAR d1(E) BAR d3(E)

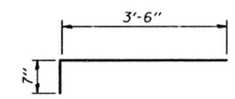

BAR x(E)

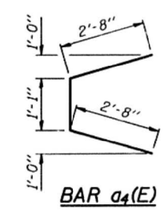

BAR a4(E)

TWO SUPERSTRUCTURES
BILL OF MATERIAL

Bar	No.	Size	Length	Shape
d(E)	604	#5	37'-2"	
d1(E)	470	#5	37'-8"	
d2(E)	604	#6	4'-0"	
d3(E)	16	#5	25'-0"	
d4(E)	8	#5	6'-5"	
d5(E)	32	#5	2'-0"	
b(E)	420	#5	36'-5"	
b1(E)	156	#6	32'-6"	
b2(E)	432	#5	30'-7"	
d(E)	768	#5	3'-0"	
d1(E)	768	#5	2'-7"	
d2(E)	704	#4	3'-0"	
d3(E)	704	#4	4'-1"	
e(E)	96	#4	24'-5"	
e1(E)	96	#4	7'-7"	
e2(E)	48	#4	24'-8"	
e3(E)	16	#8	47'-6"	
e4(E)	32	#8	7'-7"	
e5(E)	8	#8	48'-1"	
e6(E)	16	#5	47'-6"	
e7(E)	32	#5	7'-7"	
e8(E)	8	#5	48'-1"	
x(E)	144	#5	4'-1"	
Reinforcement Bars, Epoxy Coated		Pound	99800	
Concrete Superstructure		Cu. Yd.	432.7	

Reinforcement bars designated (E) shall be epoxy coated.
Bars indicated thus 36 x 5-#5 etc. indicates 36 line of bars with 5 lengths per line.

PARAPET
MIN. BAR LAPS
#4 bar = 1'-4"

* Place d(E) and h7(E) bars in back of anchor bolt as shown if required to maintain 1" cl. (+0-⅛"). Anchor bolts should be tied to d(E) and h7(E) bars.

** Bars are shown and billed on Abutment sheet.

FOR INFORMATION ONLY

DESIGNED	Nicholas J. Sovell	January 26, 2000
CHECKED	Chad Fuesting	EXAMINED Thomas J. Domagalski, ENGINEER OF BRIDGE DESIGN
DRAWN	Michael R. Gillette	PASSED Ralph E. Anderson, ENGINEER OF BRIDGES AND STRUCTURES
CHECKED	C.J.F. N.J.S.	

SUPERSTRUCTURE DETAILS
F.A.I. RTE. 74 - SEC. 90(15VB-1)I-1
TAZEWELL COUNTY
STATION 644+27.11

MODEL: Default
FILE NAME: P:\2019\190388\W06 I-74 Bridge PSEs\4 CADD - DWG\4.4 Struc\0900021-0022\0900021-0022-68F54-017 Existing Superstructure Details.dgn

TWM ENGINEERING GEOSPATIAL SERVICES
TWM, INC.
WWW.TWM-INC.COM
IL DESIGN FIRM LICENSE NO: 184-001220

USER NAME = ckoltveit	DESIGNED - NP	REVISED -	
	CHECKED - ALN	REVISED -	
PLOT SCALE = 0:2.0000 ':" / in.	DRAWN - NP	REVISED -	
PLOT DATE = 12/1/2020	CHECKED - ALN	REVISED -	

STATE OF ILLINOIS
DEPARTMENT OF TRANSPORTATION

EXISTING SUPERSTRUCTURE DETAILS
SN 090-0021 & 090-0022
SHEET 17 OF 30 SHEETS

F.A.I. RTE.	SECTION	COUNTY	TOTAL SHEETS	SHEET NO.
74	90-15(HB(1-4);VB;B)BP,BJR,BRR	TAZEWELL	192	98
		CONTRACT NO. 68F54		
	ILLINOIS	FED. AID PROJECT		

ROUTE NO.	SECTION	COUNTY	TOTAL SHEETS	SHEET NO.
F.A.I. 74	90 (15VB-1) I-1	TAZEWELL	101	62
FED. ROAD DIST. NO. 7	ILLINOIS	FED. AID PROJECT-		

SHEET NO. 8
22 SHEETS

STATE OF ILLINOIS
DEPARTMENT OF TRANSPORTATION

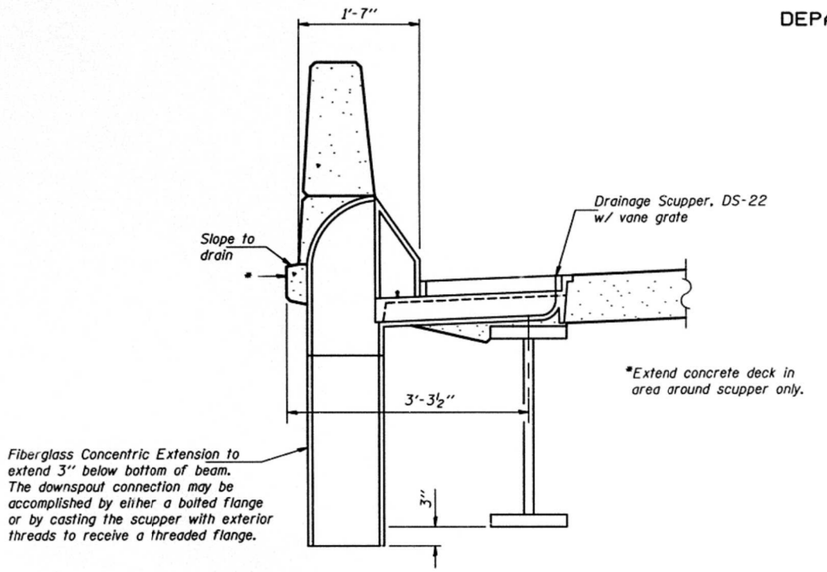

SECTION A-A

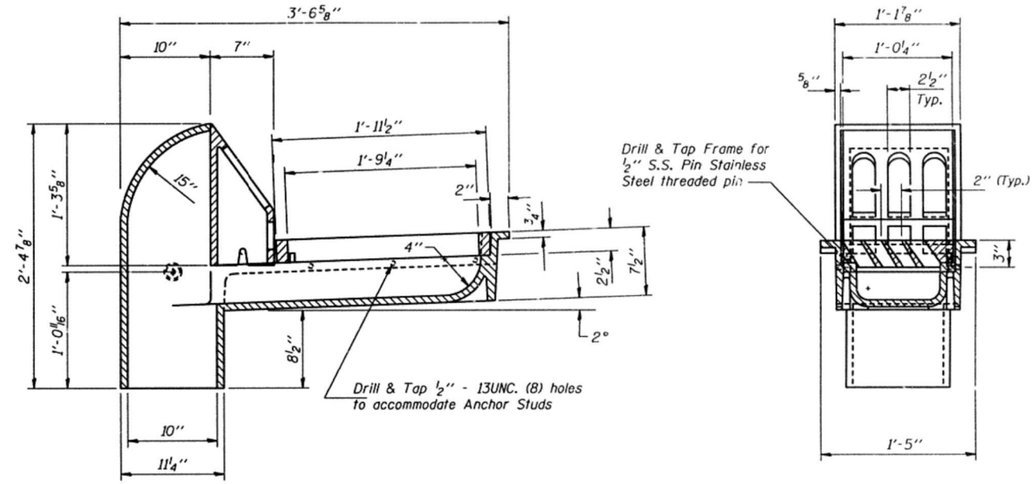

DRAINAGE SCUPPER DETAIL

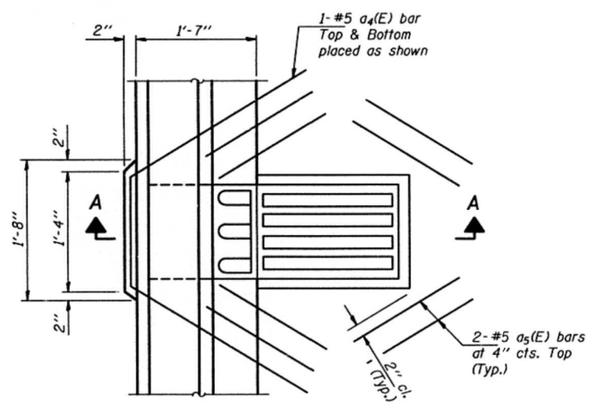

PLAN

Note: Reinforcement bars designated (E) shall be epoxy coated.
Cut longitudinal reinforcement to clear drainage scuppers.
Bars billed with Bill of Material shown on sheet 7 of 22.

Notes:
All cast iron parts shall be gray iron conforming to the requirements of AASHTO M 105, Class 35B.
Bolts and nuts shall conform to the requirements of ASTM A 307.
All bolts and washers shall be galvanized according to AASHTO M 232.
As an alternate bolts and washers may be stainless steel conforming to the requirements of ASTM A 193M, Type 304.
Cost of the grate, frame, downspout, bolts and washers including complete installation of the scupper will be paid for at the unit bid price each for Drainage Scuppers.
Structural steel weldments of equal sections may be substituted for cast iron. Details shall be submitted to the Engineer for approval.

DESIGNED	Nicholas J. Sovell
CHECKED	Chad Fuesting
DRAWN	Michael R. Gillette
CHECKED	C.J.F. N.J.S.

January 26, 2000
EXAMINED Thomas J. Domagalski
ENGINEER OF BRIDGE DESIGN
PASSED Robert F. Anderson
ENGINEER OF BRIDGES AND STRUCTURES

FOR INFORMATION ONLY

DRAINAGE SCUPPER DETAILS
F.A.I. RTE. 74 - SEC. 90(15VB-1)I-1
TAZEWELL COUNTY
STATION 644+27.11

MODEL: Default
FILE NAME: P:\2019\190388\W06 I-74 Bridge PSEs\4 CADD - DWG\4.4 Struc\0900021-0022\0900021-0022-68F54-018 Existing Drainage Scupper Details.dgn

TWM ENGINEERING GEOSPATIAL SERVICES
TWM, INC.
WWW.TWM-INC.COM
IL DESIGN FIRM LICENSE NO: 184-001220

USER NAME = ckoltveit	DESIGNED - NP	REVISED -	
	CHECKED - ALN	REVISED -	
PLOT SCALE = 0:2.0000 ':" / in.	DRAWN - NP	REVISED -	
PLOT DATE = 12/1/2020	CHECKED - ALN	REVISED -	

STATE OF ILLINOIS
DEPARTMENT OF TRANSPORTATION

EXISTING DRAINAGE SCUPPER DETAILS
SN 090-0021 & 090-0022
SHEET 18 OF 30 SHEETS

F.A.I. RTE.	SECTION	COUNTY	TOTAL SHEETS	SHEET NO.
74	90-15(HB(1-4);VB;B]BP,BJR,BRR	TAZEWELL	192	99
		CONTRACT NO. 68F54		
		ILLINOIS FED. AID PROJECT		

ROUTE NO.	SECTION	COUNTY	TOTAL SHEETS	SHEET NO.
F.A.I. 74	90 (15VB-1) I-1	TAZEWELL	101	63
FED. ROAD DIST. NO. 7	ILLINOIS	FED. AID PROJECT-		

SHEET NO. 9
22 SHEETS

STATE OF ILLINOIS
DEPARTMENT OF TRANSPORTATION

Joint Size	"C" at 50°F	"D" at 50°F
2"	2"	1½" Min.
2½"	2½"	1¾" Min.
4"	3"	2½" Min.

INSTALLATION NOTES

1. Install continuous seal in roadway, parapet, curb, and sidewalk.
2. Install anchor blocks as indicated.

NOTE A: Maximum spacing of anchor bolts shall be 12" centers.

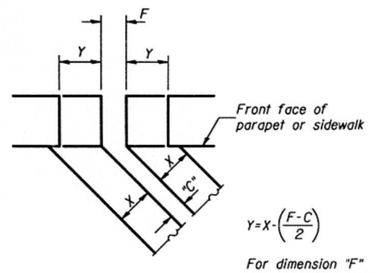

FORMING BLOCKOUT SKETCH

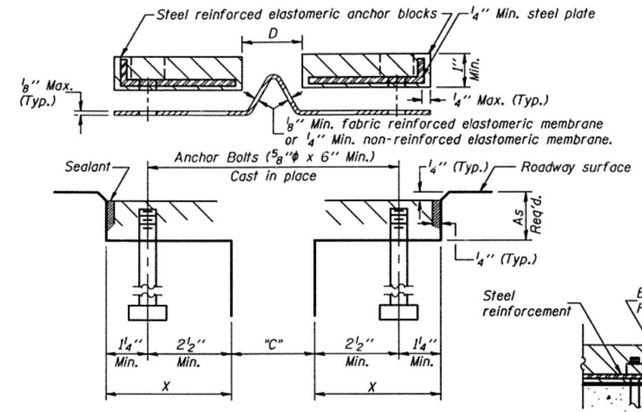

CROSS SECTION

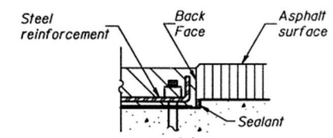

ANCHOR BLOCK WITH ASPHALT SURFACE

GENERAL NOTES

Continuous Seal Neoprene Expansion Joint shall consist of molded anchor blocks of elastomer and steel, field assembled over continuous lengths of elastomeric membrane.

The elastomeric membrane shall be premolded with a single or a double upward convolution that will have a "memory" to return to its molded position upon joint closure.

The convolution length shall be such that the extended length will not be greater than the manufactured length when the joint is fully expanded in its design range and will not protrude above the anchor blocks when the joint is fully compressed.

Joint openings shall be adjusted according to Article 503.10(c) of the Standard Specifications when the deck is poured at an ambient temperature other than 50° F.

The parapet and roadway membrane shall be made continuous by an approved vulcanizing process. Lapping will not be permitted.

SKEW LIMITATIONS

The details of the anchor blocks and the elastomeric membrane in the parapet, as shown, are for up to 50° skews.

For skews greater than 50°, the anchor blocks and the elastomeric membrane, installed according to dimension "D", might require modifications to insure a minimum clearance of 1½" from centerline of anchor studs to edge of parapet opening. The anchor blocks and the elastomeric membrane shall also be installed to the top of the parapet with the anchor studs spaced at ±12" cts.

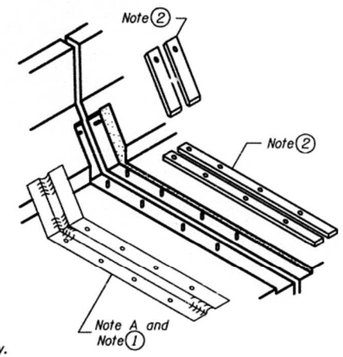

AT PARAPET

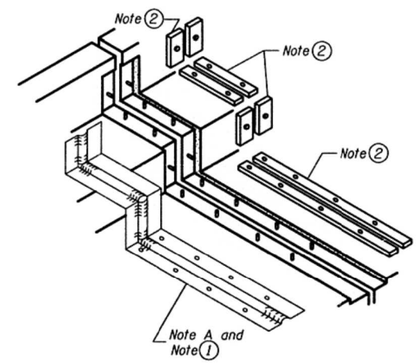

AT SIDEWALK OR MEDIAN

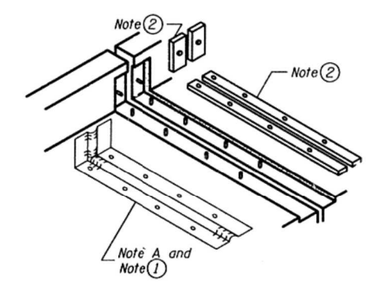

AT WALL

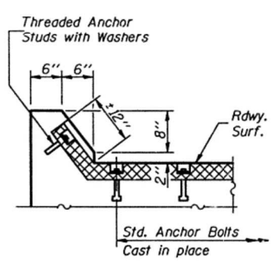

AT CURB

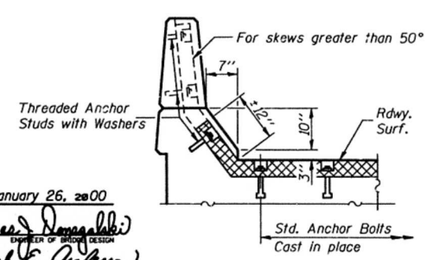

AT PARAPET

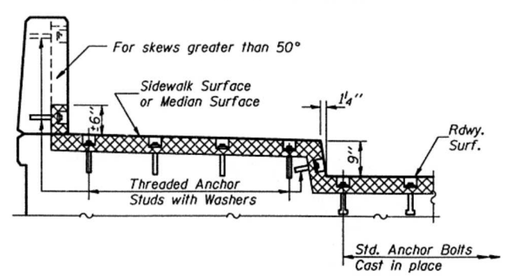

AT SIDEWALK OR MEDIAN
TYPICAL END TREATMENTS

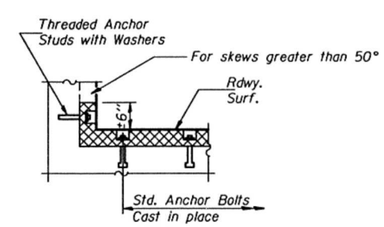

AT WALL

FOR INFORMATION ONLY

CONTINUOUS SEAL TYPE
NEOPRENE EXPANSION JOINTS
For 2", 2½" and 4" Movement

F.A.I. RTE. 74 - SEC. 90(15VB-1)I-1
TAZEWELL COUNTY
STATION 644+27.11

DESIGNED	Nicholas J. Sovell
CHECKED	Chad Fuesting
DRAWN	Michael R. Gillette
CHECKED	C.J.F. N.J.S.

EJ-CS 4-30-97

January 26, 2000
EXAMINED Thomas J. Domagalski ENGINEER OF BRIDGE DESIGN
PASSED Ralph E. Anderson ENGINEER OF BRIDGES AND STRUCTURES

MODEL: Default
FILE NAME: P:\2019\190388\W06 I-74 Bridge PSEs\4 CADD - DWG\4.4 Struc\0900021-0022\0900021-0022-68F54-019 Existing Seal Joint Details.dgn

TWM ENGINEERING GEOSPATIAL SERVICES
TWM, INC. WWW.TWM-INC.COM
IL DESIGN FIRM LICENSE NO: 184-001220

USER NAME = ckoltveit	DESIGNED - NP	REVISED -	
	CHECKED - ALN	REVISED -	
PLOT SCALE = 0:2.0000 ':" / in.	DRAWN - NP	REVISED -	
PLOT DATE = 12/1/2020	CHECKED - ALN	REVISED -	

STATE OF ILLINOIS
DEPARTMENT OF TRANSPORTATION

EXISTING JOINT DETAILS
SN 090-0021 & 090-0022
SHEET 19 OF 30 SHEETS

F.A.I. RTE.	SECTION	COUNTY	TOTAL SHEETS	SHEET NO.
74	90-15[HB(1-4);VB;B]BP,BJR,BRR	TAZEWELL	192	100
		CONTRACT NO. 68F54		
		ILLINOIS	FED. AID PROJECT	