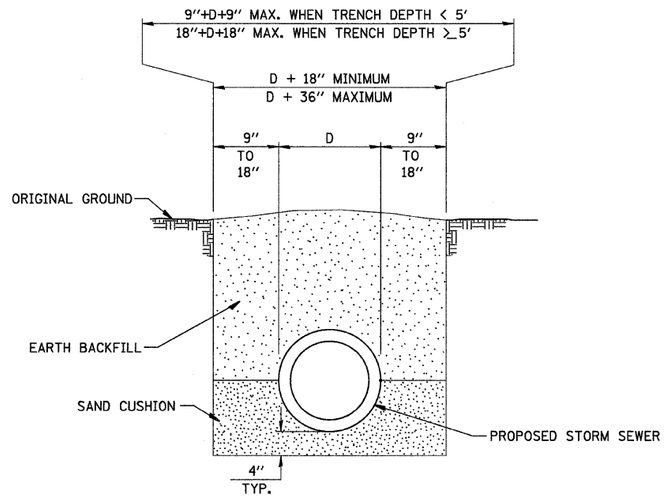

DETAIL OF TRENCH EXCAVATION AND BACKFILL UNDER TURF

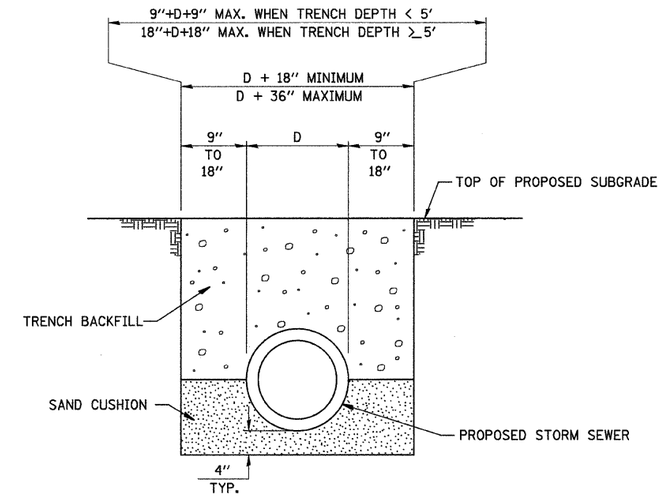

DETAIL OF TRENCH EXCAVATION AND BACKFILL UNDER PROPOSED ROADWAY PAVEMENT AND ENTRANCES

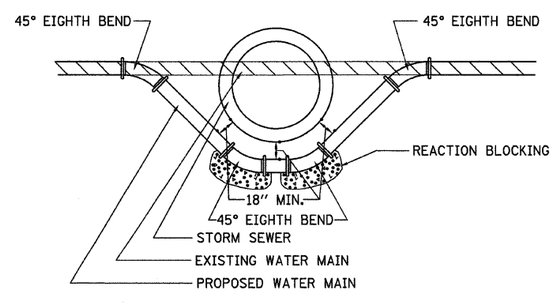

DETAIL OF LOWERING WATERMAIN

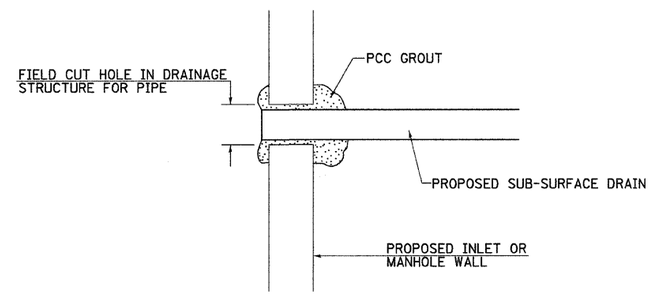

NOTE: ALL ITEMS REQUIRED FOR CONNECTING SUB-SURFACE DRAINS TO PROPOSED DRAINAGE STRUCTURES SHALL BE CONSIDERED INCLUDED IN THE COST OF CONSTRUCTION THE PROPOSED DRAINAGE STRUCTURE.

DETAIL OF CONNECTING SUB-SURFACE DRAINS TO PROPOSED DRAINAGE STRUCTURES

FILE NAME = V:\2522\Plaza Plans\2522D004.dgn	USER NAME = jwhite	DESIGNED - JRB	REVISED -	STATE OF ILLINOIS DEPARTMENT OF TRANSPORTATION	CITY OF JACKSONVILLE DOWNTOWN PLAZA STREETS RECONSTRUCTION SPECIAL DETAILS	F.A. RTE.	SECTION	COUNTY	TOTAL SHEETS	SHEET NO.
		DRAWN - JCW	REVISED -			N/A	05-00121-00-PV	MORGAN	74	57
	PLOT SCALE = 9.6384 ' / IN.	CHECKED - JRB	REVISED -					CONTRACT NO. 93504		
	PLOT DATE = 9/28/2009	DATE - 09/25/09	REVISED -		SCALE: N/A SHEET NO. - OF - SHEETS STA. - TO STA. -	FED. ROAD DIST. NO.	ILLINOIS	FED. AID PROJECT		