ROUTE NO.	SECTION	COUNTY	TOTAL SHEETS	SHEET NO.
F.A.U. 5370	*	DEKALB	35	34
FED. ROAD DIST. NO. 7		ILLINOIS	FED. AID PROJECT-	

* Section 09-00175-00-SP

Contract #87419

##- Open Graded Backfill

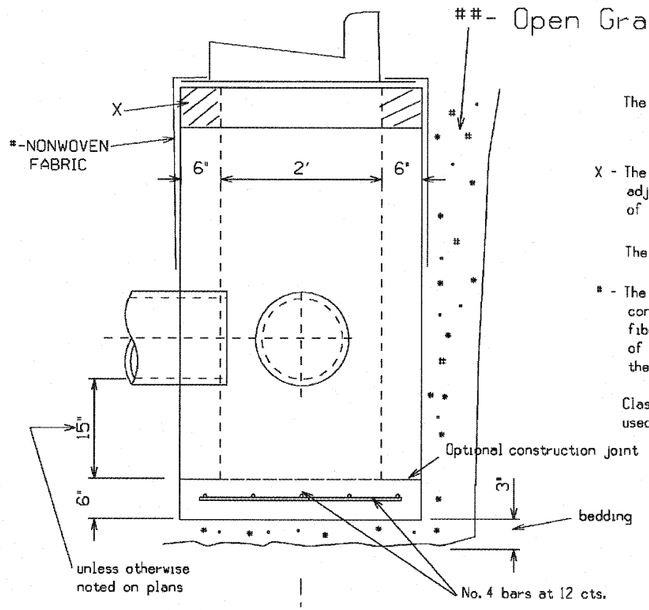

The height of the box may be constructed 6" short to allow for field adjustments.

X - The wall adjustments shall be made with square adjustments rings of the same dimensions of the structure

The inlet shall be cast inplace or precast.

\# - The top of the structure shall be wrapped with a continuous nonwoven fabric made up of polypropylene fibers (ADS 4420). The fabric shall overlap the lip of the frame by 6" and extend downward 30" below the bottom of the frame.

Class SI concrete or precast concrete shall be used throughout.

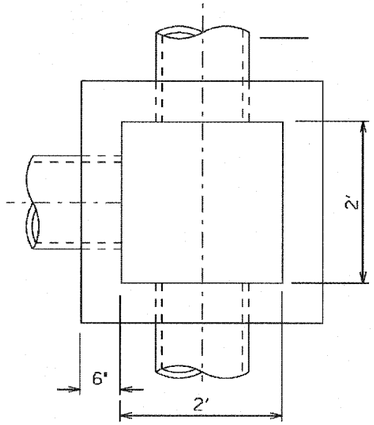

The side walls may be built as precast segmented sections.

\#\# - The only bedding and backfill material that will be allowed is ⅜" or ⅝" chips or washed concrete stone. The structure shall be backfilled to the height of 2' below the bottom of the casting flange.

All voids around the pipe entrance shall be sealed with mortar on both inside and outside.

Except as noted hereon, inlet special shall be constructed in accordance with section 602 of the standard specifications omitting articles 602.05 and 602.06.

Steps shall be omitted when the depth of the inlet is less than 5 ft.

Holes shall be made for underdrains and/or sump lines per plan locations during precast process.

STANDARD DETAIL FOR CATCH BASIN SPECIAL	REVISIONS 01-02-01 CEW	CITY OF DEKALB STORM SEWER STANDARD SS-203

STANDARD DESIGN FRAME AND GRATE TYPE 11

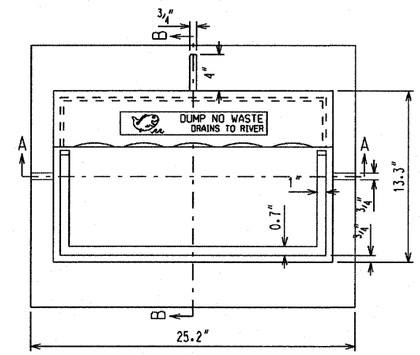

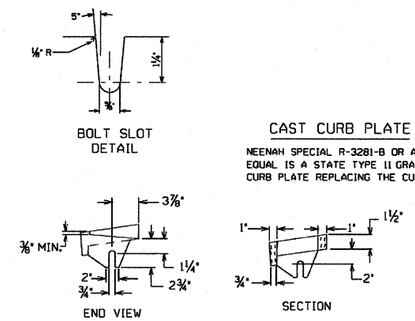

CAST CURB PLATE

NEENAH SPECIAL R-3281-B OR APPROVED EQUAL. IS A STATE TYPE 11 GRATE WITH CURB PLATE REPLACING THE CURB BOX.

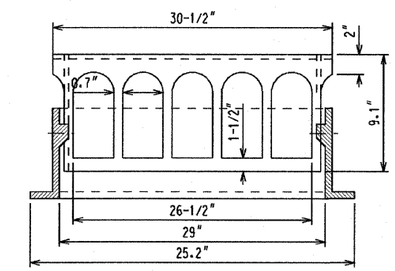

SECTION A-A

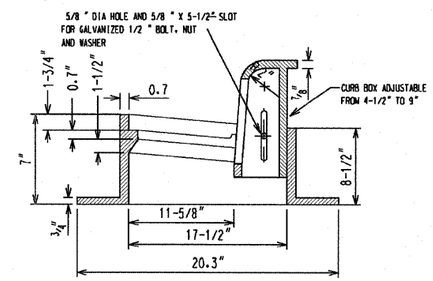

SECTION B-B

CAST FRAME

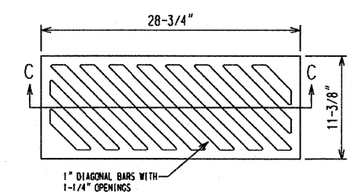

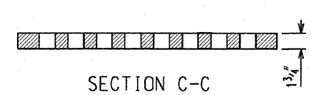

SECTION C-C

CAST GRATE TYPE R

HEAVY DUTY
TOTAL WEIGHT: 485 LBS
MANUFACTURER OR EQUAL: NEENAH R-3281-A

FOR DRIVEWAY/CROSSWALK APPLICATIONS, USE NEENAH R-3246-1 CURB PLATE

THE CAST GRATE MAY BE MADE OF EITHER GRAY IRON OR DUCTILE IRON CONFORMING TO THE STANDARD SPECIFICATIONS. DUCTILE IRON CASTING SHALL BE GRADE 65-45-12

DIAGONAL BAR GRATE IS REVERSIBLE FOR RIGHT OR LEFT HAND FLOW

STANDARD DETAIL FOR BARRIER CURB FRAME AND GRATE (STATE TYPE 11)	REVISIONS 2/13/04 RBR	CITY OF DEKALB STORM SEWER STANDARD SS-206

L:\STANDARDS\STORM\TYLLFR_GR.DGN