ROUTE NO.	SECTION	COUNTY	TOTAL SHEETS	SHEET NO.
F.A.S. 287	*	GRUNDY	33	10
FED. ROAD DIST. NO. 7		ILLINOIS	FED. AID PROJECT-	

SHEET NO. 5
25 SHEETS

Contract #87376 *05-00039-03-BR

When "A" is 3'-6" or less, the temporary concrete barrier shall be anchored to the new slab according to Detail I or Detail II. No anchorage is required when "A" is greater than 3'-6".

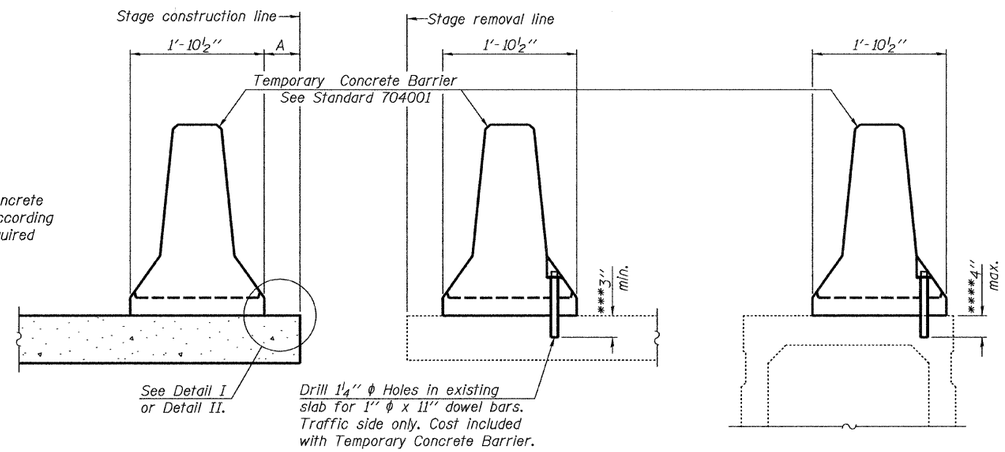

NEW SLAB

EXISTING SLAB

EXISTING DECK BEAM

SECTIONS THRU SLAB OR DECK BEAM

NOTES

Detail I - With Bar Splicer or Couplers:
Connect one (1) 1"x7"x10" steel PL to the top layer of couplers with 2-⅝" ϕ bolts screwed to coupler at approximate ℄ of each barrier panel.

Detail II - With Extended Reinforcement Bars:
Connect one (1) 1"x7"x10" steel PL to the concrete slab or concrete wearing surface with 2-⅝"ϕ Expansion Anchors or cast in place inserts spaced between the top layer of reinforcement at approximate ℄ of each barrier panel.

Cost of anchorage is included with Temporary Concrete Barrier.

The 1" x 7" x 10" plate shall not be removed until stage II construction forms and all reinforcement bars are in place and the concrete is ready to be placed.

***Dimension shown is minimum required embedment into concrete. If hot-mix asphalt wearing surface is present, minimum embedment shall be in addition to wearing surface depth.

****If existing deck beam is to remain in place after stage construction, embedment shall only be into wearing surface and not into existing deck beam concrete.

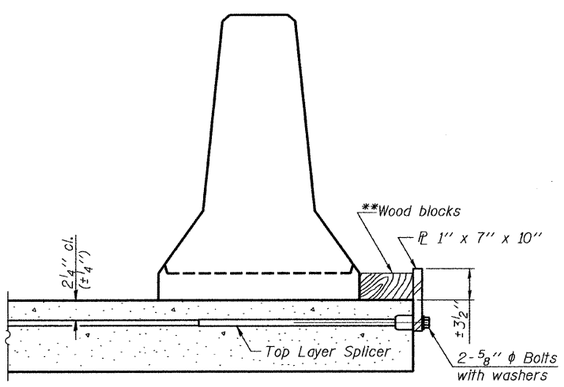

DETAIL I

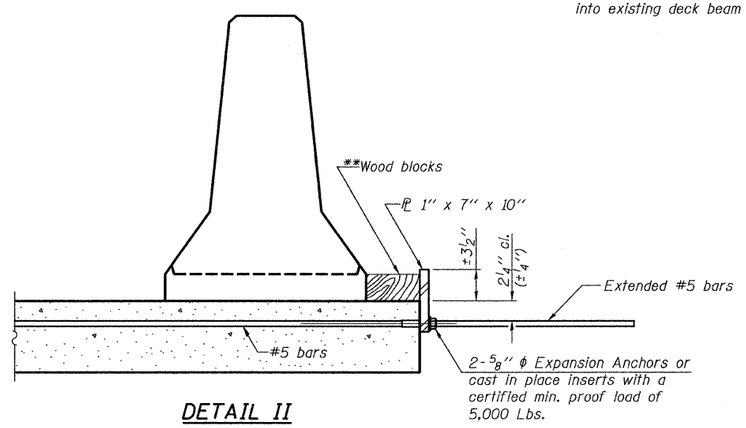

DETAIL II

**Wood blocks may be omitted when required to provide minimum stage traffic lane width. When the wood blocks are omitted, the concrete barrier shall be in direct contact with the steel retainer plate.

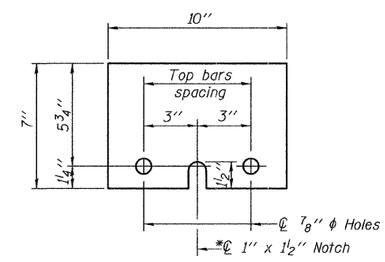

STEEL RETAINER PL 1" x 7" x 10"

* Required only with Detail II

ILLINOIS DEPARTMENT OF TRANSPORTATION	
SHEET TITLE: TEMPORARY CONCRETE BARRIER	
PROJECT: F.A.S. RT. 287 (C.H. 29) SECTION 05-00039-03-BR GRUNDY COUNTY STATION 126+42.00 STRUCTURE NO. 032-3101	PROJECT NO. 05042; SCALE; DATE 8/27/09; DRAWN BY TFG; CHECKED BY CME/MCB
COOMBE-BLOXDORF P.C. Engineers / Land Surveyors Springfield, Illinois Design Firm License No. 184-002703	DRAWING NO. 5 OF 25 SHTS

PLOT DATE = 08/27/2009
FILE NAME = ...bvd8pr-ridge-plans8ant-05.dgn
PLOT SCALE = 0x1.0000 1" / IN.
USER NAME = DFC-

R-27

9-3-07