STATE OF ILLINOIS
DEPARTMENT OF TRANSPORTATION

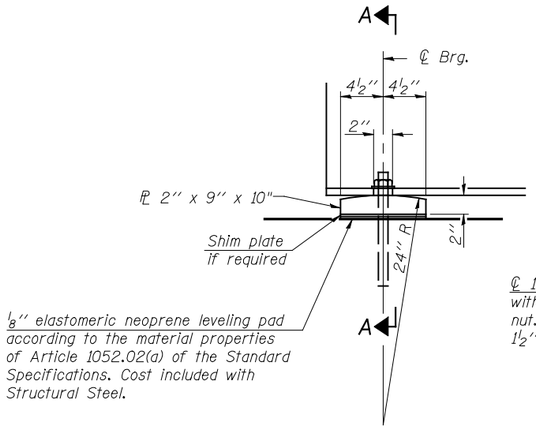

ELEVATION AT ABUTMENT

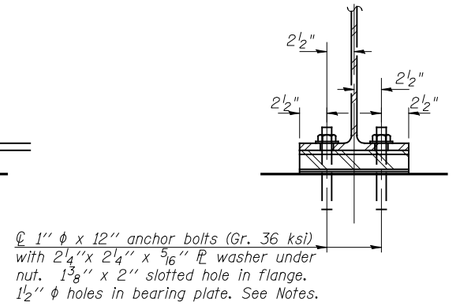

SECTION A-A

FIXED BEARING AT INTEGRAL ABUTMENT

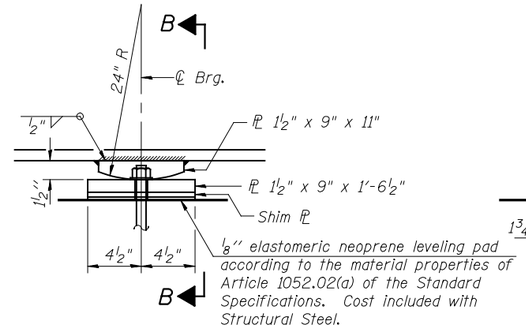

ELEVATION AT PIER

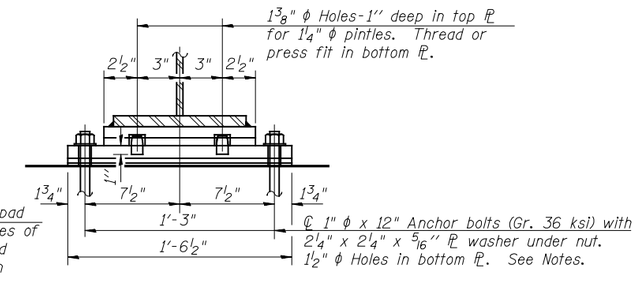

SECTION B-B

FIXED BEARING

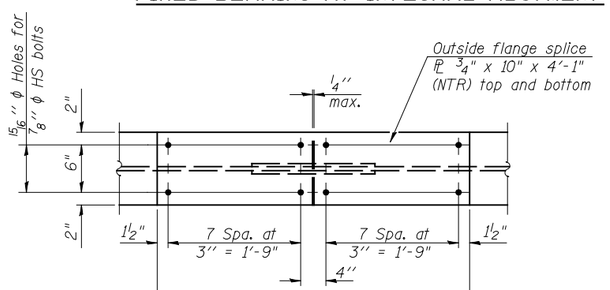

PLAN

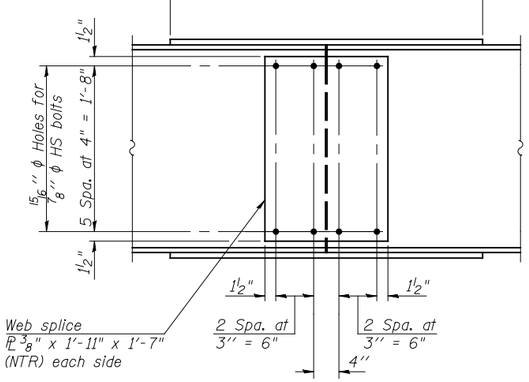

ELEVATION

SPLICE DETAIL
(12-Required)

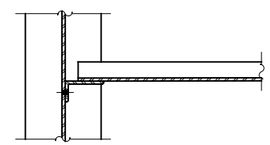

SECTION C-C

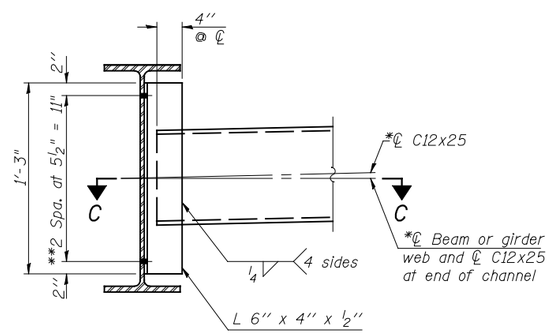

INTERIOR DIAPHRAGM

Two hardened washers required for each set of oversized holes.

*Alternate channels (C12x30) are permitted to facilitate material acquisition. Calculated weight of structural steel is based on the lighter section. The alternate, if utilized, shall be provided at no additional cost to the Department.

**¾" ϕ HS bolts, 15/16" ϕ holes

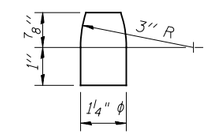

PINTLE

Notes:

Structural steel for splices, diaphragms, connecting plates, and bearing plates shall be AASHTO M270, Grade 50W.

Anchor bolts shall be ASTM F 1554 all-thread (or an Engineer approved alternate material) of the grade(s) and diameter(s) specified. ASTM A307 Grade C anchor bolts may be used in lieu of ASTM F1554 Grade 36 (Fy=36ksi). The corresponding specified grade of AASHTO M314 anchor bolts may be used in lieu of ASTM F1554.

Anchor bolts of fixed bearings may be either cast in place or installed in holes drilled after the supported member is in place.

Drilled and set anchor bolts shall be set according to Article 521.06 of the Standard Specifications.

Load carrying components designated "NTR" shall conform to the Supplemental Requirements for Notch Toughness, Zone 2.

Two ⅛" adjusting shims shall be provided for each bearing in addition to all other plates or shims and placed as shown on bearing details.

BEARING, SPLICE, AND DIAPHRAGM DETAILS
U.S. 136 OVER
PRAIRIE CREEK
STRUCTURE NO. 057-0245

McDonough-Whitlow, P.C.
Consulting Engineers & Land Surveyors
138 East Wood Street
Hillsboro, IL 62049
Phone: 217.532.9233
Fax: 217.532.6300
PROFESSIONAL DESIGN No. 184-002754

DESIGNED:	CMF	DRAWN:	RNH
CHECKED:	TMM	CHECKED:	TMM

	F.A.P. RTE.	SECTION	COUNTY	TOTAL SHEETS	SHEET NO.
SHEET 11 OF 17	315	120BR-1	MCLEAN	49	22
		STA. 126+95.70	CONTRACT NO. 70524		
	FED. ROAD DIST. NO.	ILLINOIS	FED. AID PROJECT		

DATE: 09/30/2009 14:48 USER: RNH FILE: F:\Projects\IDOT PROJECTS\ 05-044-6\Drawings\ 0570245-70524.dgn