CONTRACT NO. 62882

F.A.P RTE.	SECTION	COUNTY	TOTAL SHEETS	SHEET NO.
326	*	McHENRY	502	57
STA. 9+35.22		TO STA.142+08.53		
FED. ROAD DIST. NO.	ILLINOIS	FED. AID PROJECT		

* (105X & 106) WRS-2

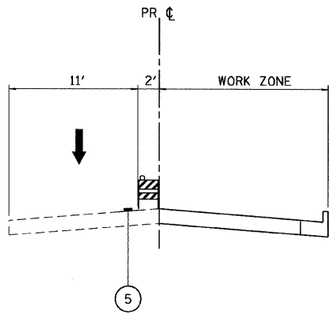

STAGE 2: BORDEN STREET
STAGE 2: NORTH STREET (WEST)

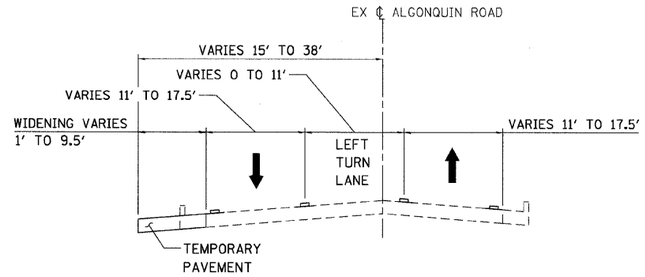

PRE-STAGE: ALGONQUIN ROAD
STA 86+52.5 TO STA 99+76.7

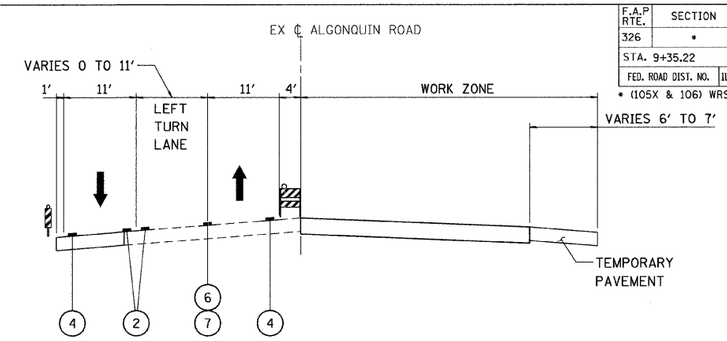

STAGE 1: ALGONQUIN ROAD (WEST)

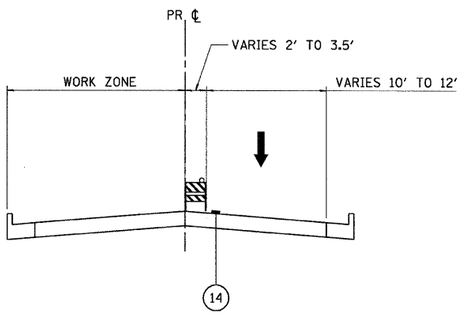

STAGE 2B: BORDEN STREET
STAGE 2B: NORTH STREET (WEST)

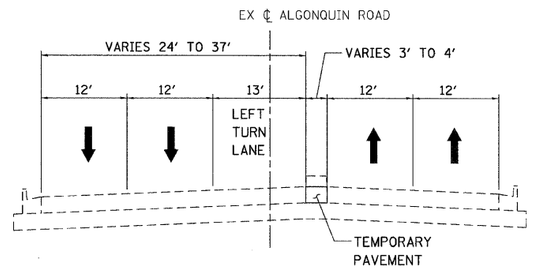

PRE-STAGE: ALGONQUIN ROAD
STA 104+40.0 TO STA 105+62.6
STA 106+50.7 TO STA 108+01.9

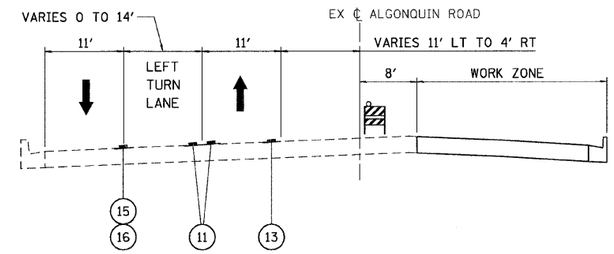

STAGE 1: ALGONQUIN ROAD (EAST)

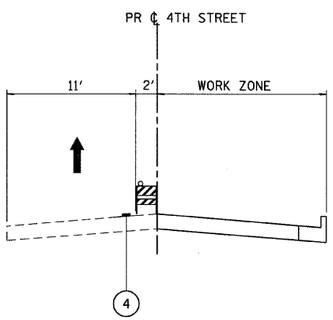

STAGE 2: 4TH STREET

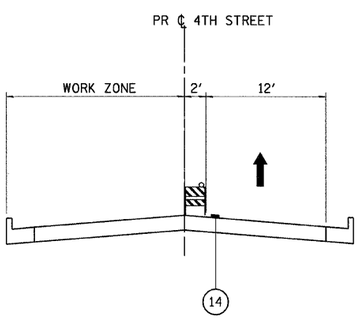

STAGE 2B: 4TH STREET

PLOT DATE = Wednesday, August 05, 2009
FILE NAME = S:\II-CADD\01-prt\057_mot_typ_sec_side_5.dgn
PLOT SCALE = 100.0000
USER NAME = 3938

REVISIONS	
NAME	DATE

Stanley Consultants INC.
850 West Higgins Road, Suite 730, Chicago, Illinois 60631-2801
www.stanleyGOUD.com
Illinois Firm Registration No.: 184-000533
(773) 693-5924

ILLINOIS DEPARTMENT OF TRANSPORTATION

BORDEN ST, 4TH ST, NORTH ST, & ALGONQUIN RD
MAINTENANCE OF TRAFFIC TYPICAL SECTIONS
SHEET 1 OF 1

SCALE: VERT. HORIZ. NO SCALE
DATE: 8/5/2009
DRAWN BY: E.D.
CHECKED BY: B.S.