CONTRACT NO. 62882

F.A.P RTE.	SECTION	COUNTY	TOTAL SHEETS	SHEET NO.
326	*	McHENRY	502	54
STA. 9+35.22		TO STA.142+08.53		
FED. ROAD DIST. NO.	ILLINOIS	FED. AID PROJECT		

* (105X & 106) WRS-2

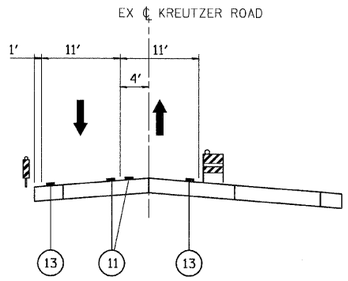

STAGE 2B: KREUTZER ROAD (WEST)
STAGE 3: KREUTZER ROAD (WEST)

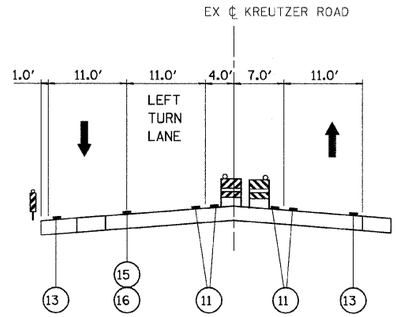

STAGE 3B: KREUTZER ROAD (EAST)

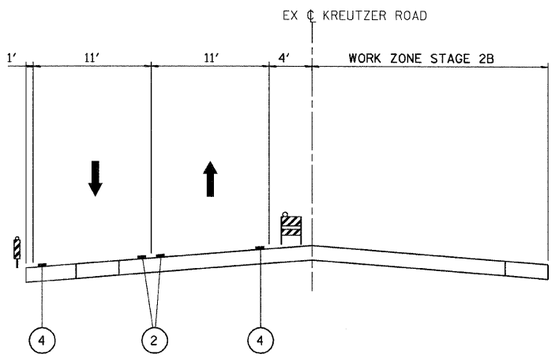

STAGE 2B: KREUTZER ROAD (EAST)
STAGE 3: KREUTZER ROAD (EAST)

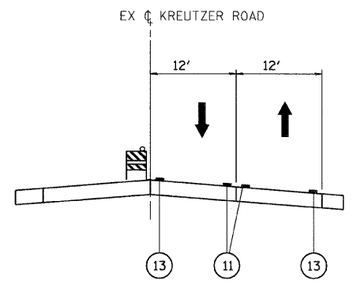

STAGE 3C: KREUTZER ROAD (WEST)

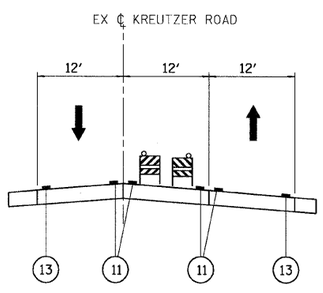

STAGE 3B: KREUTZER ROAD (WEST)

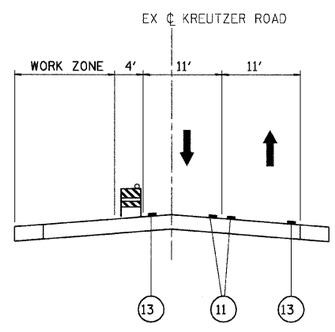

STAGE 3C: KREUTZER ROAD (EAST)

PLOT DATE = Wednesday, August 05, 2009
FILE NAME = S:\IL-CADD\01-sht\054_mct_typ_sec_side_2.dgn
PLOT SCALE = 50 ' / in.
USER NAME = 38938

REVISIONS	
NAME	DATE

Stanley Consultants INC.
8501 West Higgins Road, Suite 730, Chicago, Illinois 60631-2801
www.stanleygroup.com
Illinois Firm Registration No.: 184-001533
(773) 693-9824

ILLINOIS DEPARTMENT OF TRANSPORTATION

KREUTZER ROAD

MAINTENANCE OF TRAFFIC TYPICAL SECTIONS

SHEET 2 OF 2

SCALE: VERT. NO SCALE HORIZ.
DATE: 8/5/2009

DRAWN BY: E.D.
CHECKED BY: B.S.