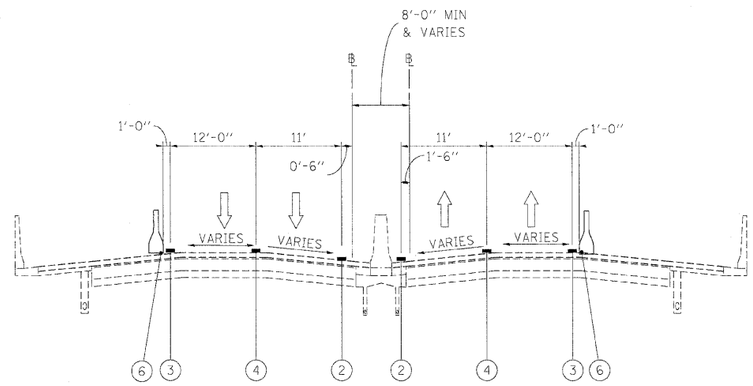

WESTBOUND
STA 716+85 TO STA 726+20

EASTBOUND
STA 716+85 TO STA 726+70

I-290 MAINTENANCE OF TRAFFIC
TYPICAL SECTION
STAGE 1

BRIDGE OMISSION: STA 720+35 TO STA 723+20

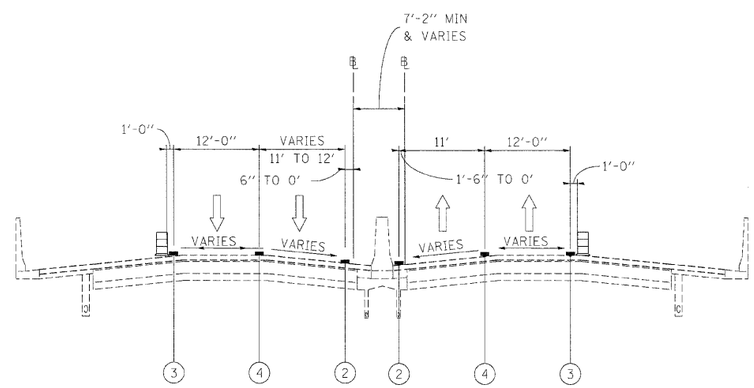

WESTBOUND
STA 726+20 TO STA 726+70

EASTBOUND
STA 726+70 TO STA 727+58

I-290 MAINTENANCE OF TRAFFIC
TYPICAL SECTION
STAGE 1

LEGEND

1. EXISTING PAVEMENT MARKING
2. WET REFLECTIVE TEMPORARY TAPE, - TYPE III, 4 INCH (YELLOW)
3. WET REFLECTIVE TEMPORARY TAPE, - TYPE III, 4 INCH (WHITE)
4. WET REFLECTIVE TEMPORARY TAPE, - TYPE III, 5 INCH (WHITE)
5. TEMPORARY PAVEMENT MARKING - LINE 6" (YELLOW) (ON BARRIER)
6. TEMPORARY PAVEMENT MARKING - LINE 6" (WHITE) (ON BARRIER)
7. WET REFLECTIVE TEMPORARY TAPE - TYPE III, 8 INCH (WHITE)

TEMPORARY CONCRETE BARRIER

TYPE II BARRIER, DRUM, OR VERTICAL BARRICADE WITH STEADY BURN MONODIRECTIONAL LIGHT

WORK ZONE

FILE NAME =	DESIGNED - AJP	REVISED -	benesch	STATE OF ILLINOIS DEPARTMENT OF TRANSPORTATION	MAINTENANCE OF TRAFFIC TYPICAL SECTION - STAGE 1	F.A.I. RTE.	SECTION	COUNTY	TOTAL SHEETS	SHEET NO.
...\prpln_ABC_C2_ml_mot_typ_st_1_09.dgn	DRAWN - TMB	REVISED -				290	(3031.1, ETC., 3838)RS-5	COOK	298	105
USER NAME = tblank	CHECKED - JJT	REVISED -				CONTRACT NO. 60G52				
PLOT DATE = 12/16/2009	DATE - 10/16/09	REVISED -			SCALE: SHEET NO. 11 OF 96 SHEETS STA. TO STA.	FED. ROAD DIST. NO.	ILLINOIS	FED. AID PROJECT		