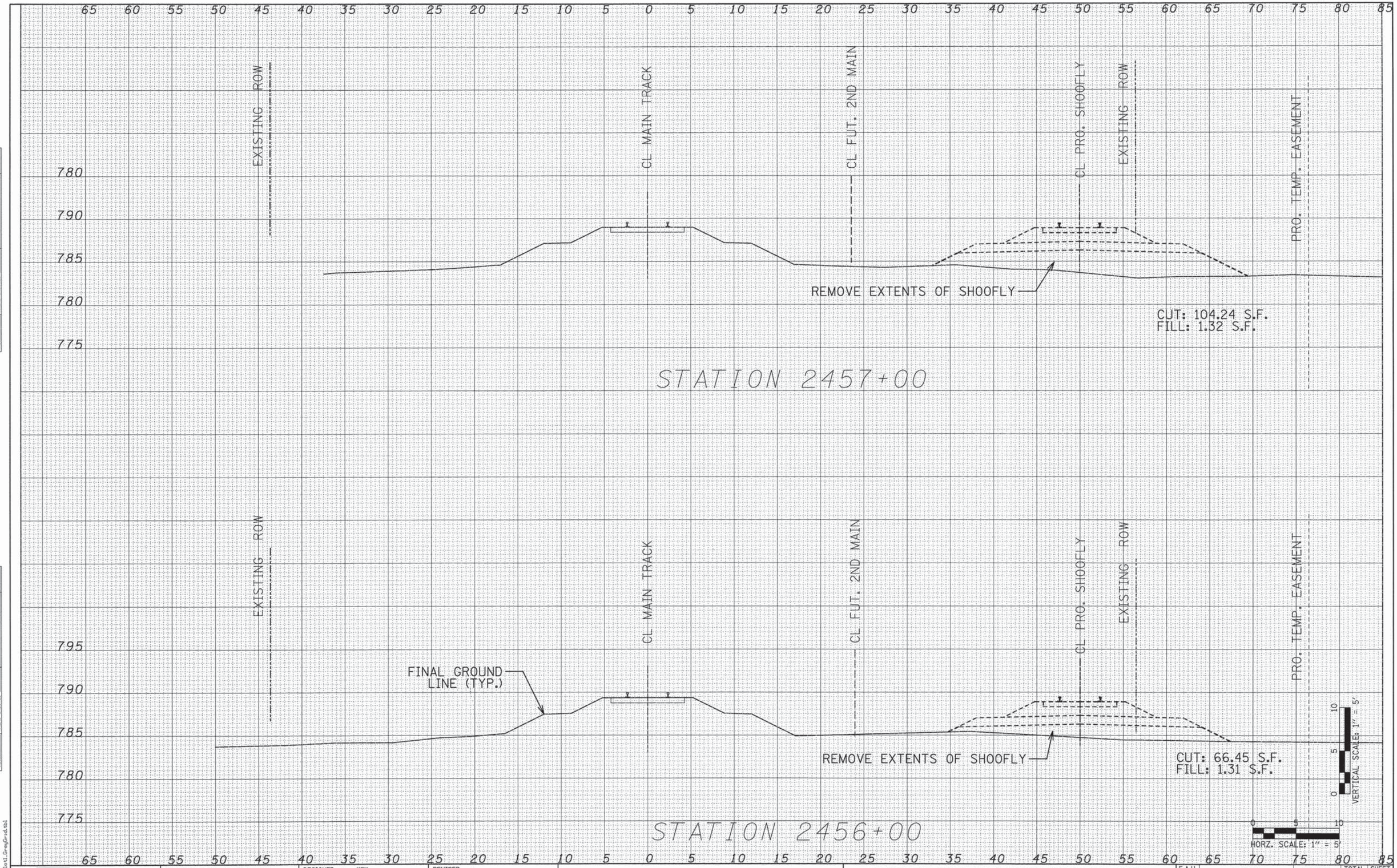

FINAL SURVEY	BY	DATE
SURVEYED		
PLOTTED		
TEMPLATE		
AREAS		
AREAS CHECKED		
NOTE BOOK		
NO.		

ORIGINAL SURVEY	BY	DATE
SURVEYED		
PLOTTED		
TEMPLATE		
AREAS		
AREAS CHECKED		
NOTE BOOK		
NO.		

PATRICK ENGINEERING INC.
4970 VARSITY DRIVE
LISLE, IL 60532
patrickengineering.com

USER NAME = tkoeppen(Rdwy_Lisle)	DESIGNED - KEK	REVISED -	
	DRAWN - KEK	REVISED -	
PLOT SCALE = 5.0000 ' / in.	CHECKED - SPH	REVISED -	
PLOT DATE = 7/17/2014	DATE - 6/30/2014	REVISED -	

STATE OF ILLINOIS
DEPARTMENT OF TRANSPORTATION

WASHINGTON STREET FROM HARYAN WAY TO LAKE STREET
RESTORATION CROSS SECTIONS

SCALE: AS NOTED | SHEET NO. RR 46 OF 54 | STA. 2456+00 TO STA. 2457+00

F.A.U RTE.	SECTION	COUNTY	TOTAL SHEETS	SHEET NO.
187	11-00121-11-BR	LAKE	496	301
				61A63

FED. ROAD DIST. NO. | ILLINOIS | FED. AID PROJECT

...\PenTable\Slot1.GrayGrid.tbl

Q:\LCDOT\21150.004\Drawings\RAIL\SHEETS\WashSt_Rail_RESTXSec_Sheets.dgn

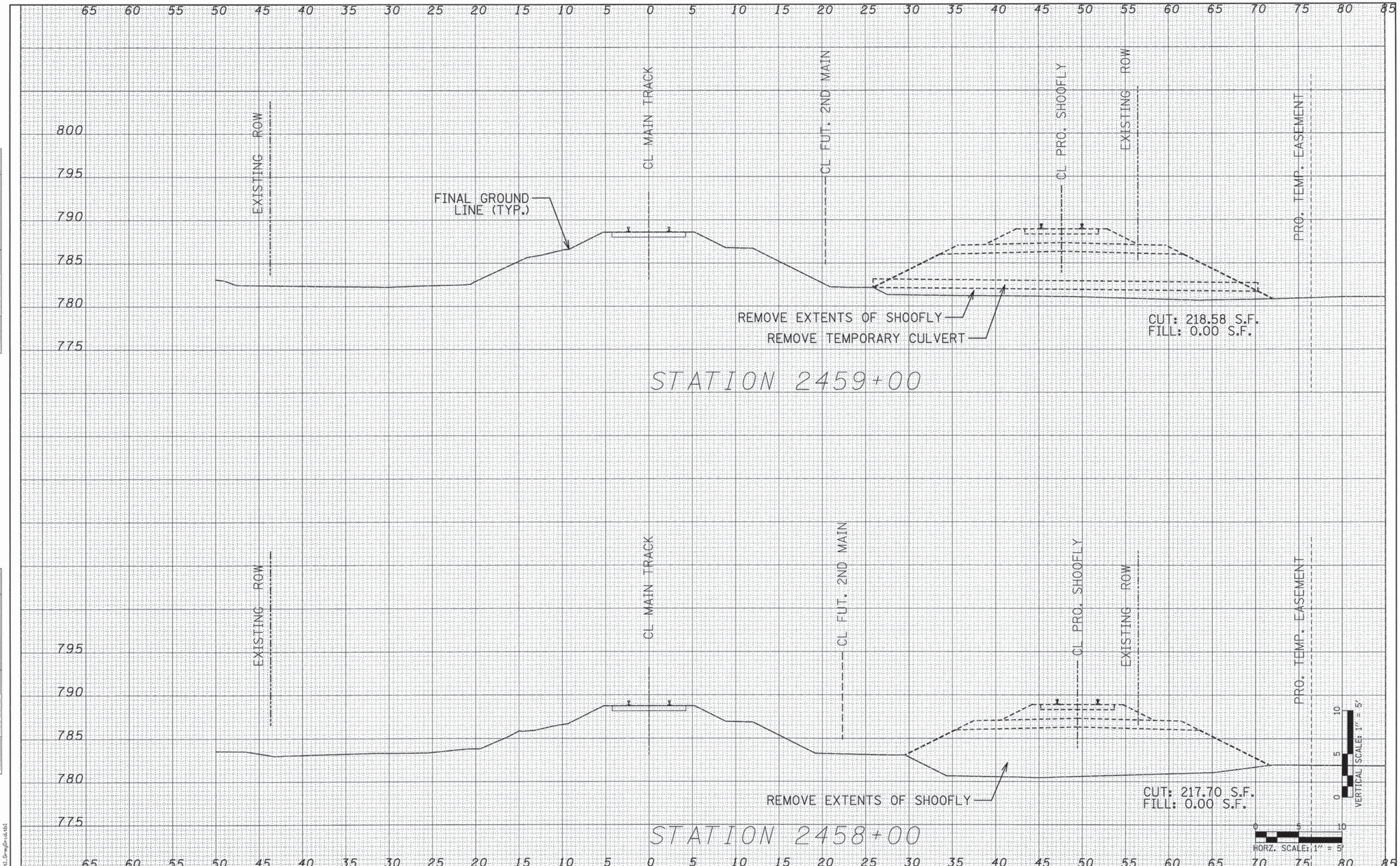

FINAL SURVEY		BY	DATE
NOTE BOOK	SURVEYED		
	PLOTTED		
	TEMPLATE		
	AREAS		
NO.	AREAS CHECKED		

ORIGINAL SURVEY		BY	DATE
NOTE BOOK	SURVEYED		
	PLOTTED		
	TEMPLATE		
	AREAS		
NO.	AREAS CHECKED		

PATRICK ENGINEERING
PATRICK ENGINEERING INC.
4970 VARSITY DRIVE
LISLE, IL 60532
patrickengineering.com

USER NAME = tkoeppen(Rdwy_Lisle)	DESIGNED - KEK	REVISED -	
	DRAWN - KEK	REVISED -	
PLOT SCALE = 5.0000 ' / in.	CHECKED - SPH	REVISED -	
PLOT DATE = 7/17/2014	DATE - 6/30/2014	REVISED -	

STATE OF ILLINOIS
DEPARTMENT OF TRANSPORTATION

WASHINGTON STREET FROM HARYAN WAY TO LAKE STREET
RESTORATION CROSS SECTIONS

SCALE: AS NOTED | SHEET NO. RR 47 OF 54 | STA. 2458+00 TO STA. 2459+00

F.A.U RTE.	SECTION	COUNTY	TOTAL SHEETS	SHEET NO.
187	11-00121-11-BR	LAKE	496	302
				61A63

FED. ROAD DIST. NO. | ILLINOIS | FED. AID PROJECT

...\PenTable\Slot1_Grey(Grid.tbl

Q:\LCDOT\21150_004\Drawings\RAIL\SHEETS\WashSt_Rail_RESTXSec_Sheets.dgn

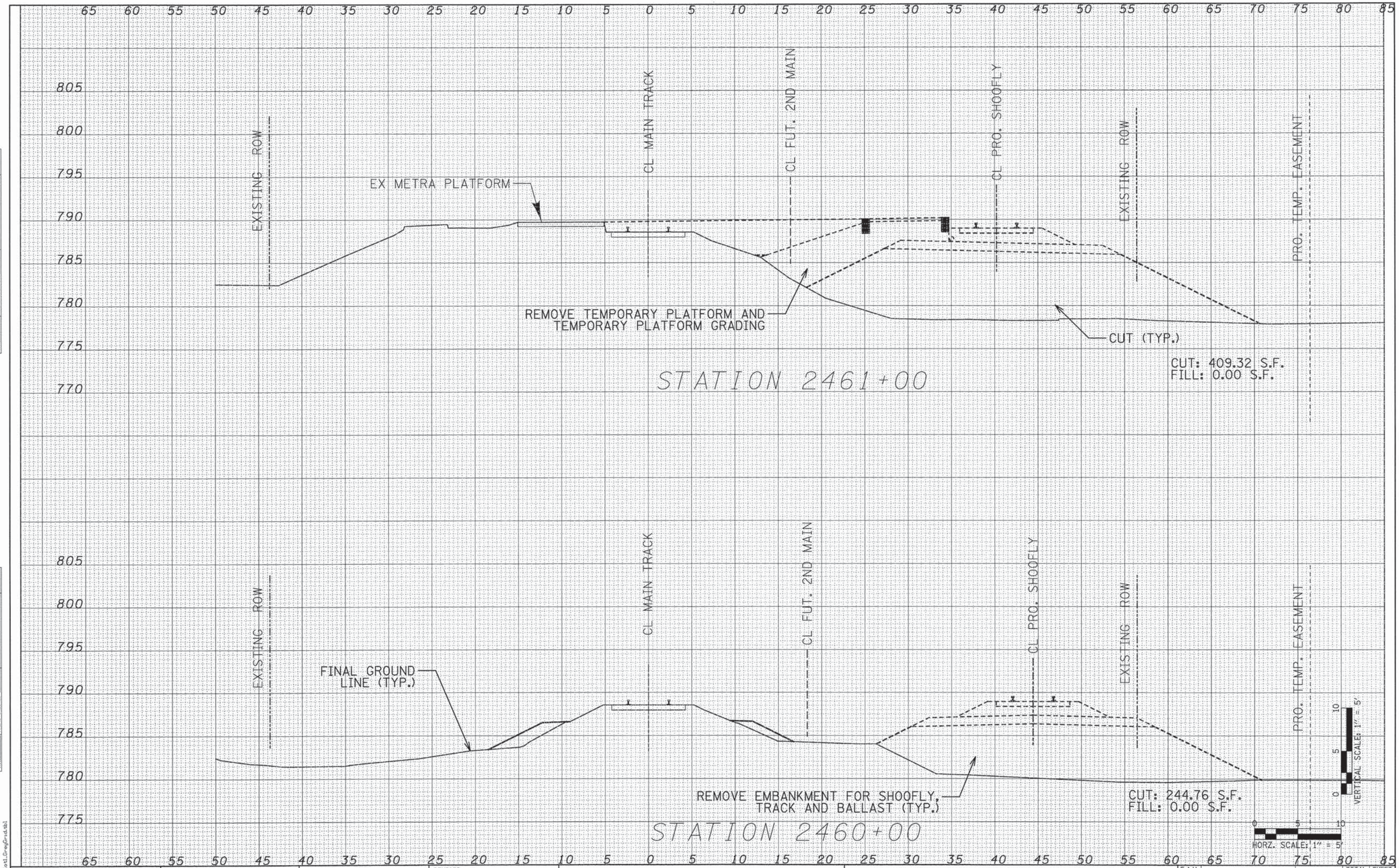

FINAL SURVEY	BY	DATE
SURVEYED		
PLOTTED		
TEMPLATE		
AREAS		
AREAS CHECKED		
NOTE BOOK NO.		

ORIGINAL SURVEY	BY	DATE
SURVEYED		
PLOTTED		
TEMPLATE		
AREAS		
AREAS CHECKED		
NOTE BOOK NO.		

...\PenTable\Slot1_OrigGrid.tbl

PATRICK ENGINEERING INC.
4970 VARSITY DRIVE
LISLE, IL 60532
patrickengineering.com

USER NAME = tkoeppen(Rdwg_Lisle)	DESIGNED - KEK	REVISED -	
	DRAWN - KEK	REVISED -	
PLOT SCALE = 5.0000 ' / in.	CHECKED - SPH	REVISED -	
PLOT DATE = 7/17/2014	DATE - 6/30/2014	REVISED -	

STATE OF ILLINOIS
DEPARTMENT OF TRANSPORTATION

WASHINGTON STREET FROM HARYAN WAY TO LAKE STREET
RESTORATION CROSS SECTIONS

SCALE: AS NOTED | SHEET NO. RR 48 OF 54 | STA. 2460+00 TO STA. 2461+00

F.A.U RTE.	SECTION	COUNTY	TOTAL SHEETS	SHEET NO.
187	11-00121-11-BR	LAKE	496	303
				61A63

FED. ROAD DIST. NO. | ILLINOIS | FED. AID PROJECT

Q:\LCDOT\21150_004\Drawings\RAIL\SHEETS\WashSt_Rail_RESTXSec_Sheets.dgn

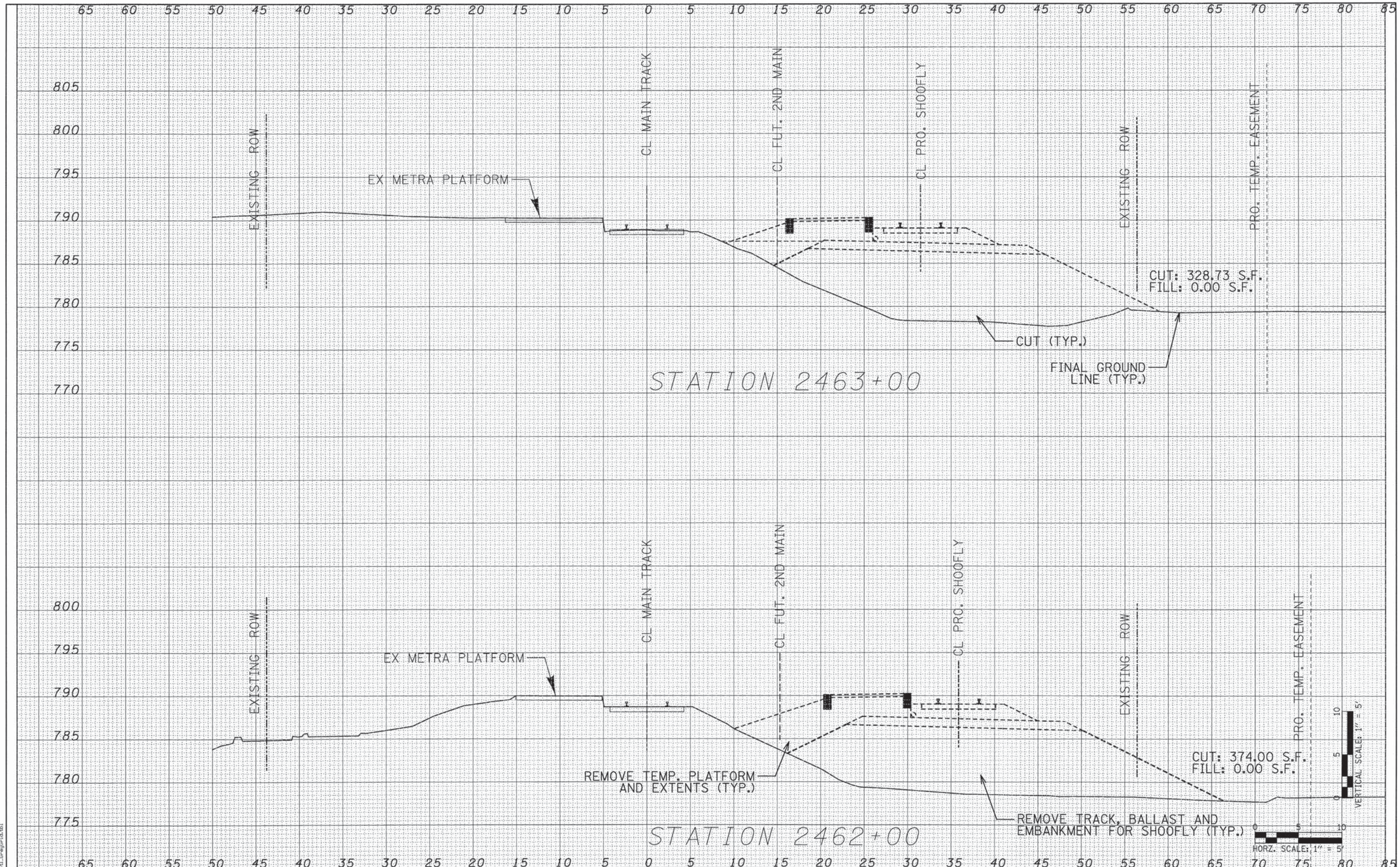

FINAL SURVEY		BY	DATE
NOTE BOOK	SURVEYED		
	PLOTTED		
	TEMPLATE		
	AREAS		
	AREAS CHECKED		
NO.			

ORIGINAL SURVEY		BY	DATE
NOTE BOOK	SURVEYED		
	PLOTTED		
	TEMPLATE		
	AREAS		
	AREAS CHECKED		
NO.			

PATRICK ENGINEERING INC.
4970 VARSITY DRIVE
LISLE, IL 60532
patrickengineering.com

USER NAME = tkoepper(Rdwy_Lisle)	DESIGNED - KEK	REVISED -	
	DRAWN - KEK	REVISED -	
PLOT SCALE = 5.0000 ' / in.	CHECKED - SPH	REVISED -	
PLOT DATE = 7/17/2014	DATE - 6/30/2014	REVISED -	

STATE OF ILLINOIS
DEPARTMENT OF TRANSPORTATION

WASHINGTON STREET FROM HARYAN WAY TO LAKE STREET
RESTORATION CROSS SECTIONS

SCALE: AS NOTED | SHEET NO. RR 49 OF 54 | STA. 2462+00 TO STA. 2463+00

F.A.U RTE.	SECTION	COUNTY	TOTAL SHEETS	SHEET NO.
187	11-00121-11-BR	LAKE	496	304
				61A63

FED. ROAD DIST. NO. | ILLINOIS | FED. AID PROJECT

...\PenTable\Slot1_GrayGrid.tbl
G:\LCDOT\21150_024\Drawings\RAIL\SHEETS\WashSt_Rail_RESTXSec_Sheets.dgn

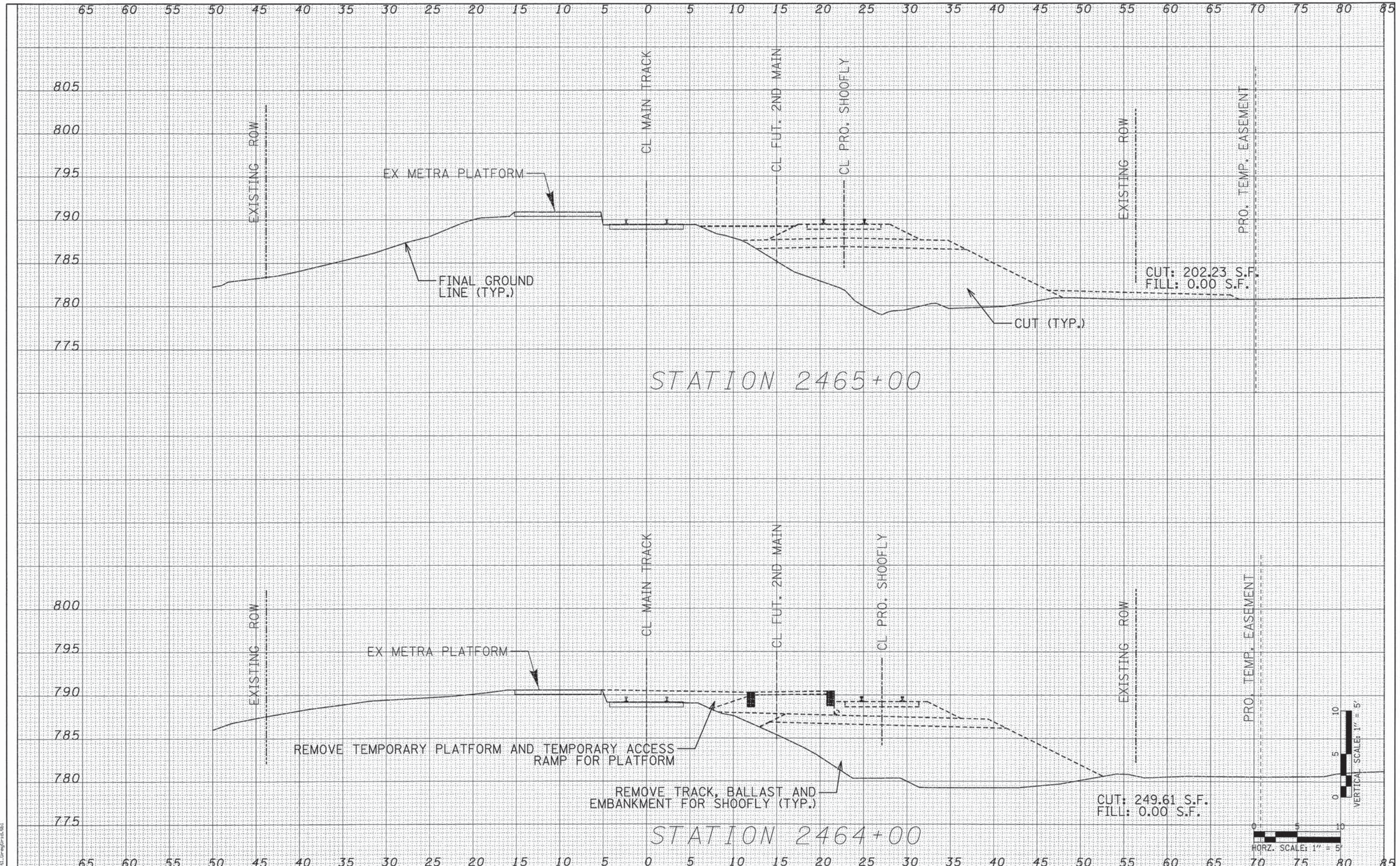

FINAL SURVEY	BY	DATE
NOTE BOOK	SURVEYED	
	PLOTTED	
	TEMPLATE	
	AREAS	
NO.	AREAS CHECKED	

ORIGINAL SURVEY	BY	DATE
NOTE BOOK	SURVEYED	
	PLOTTED	
	TEMPLATE	
	AREAS	
NO.	AREAS CHECKED	

PATRICK ENGINEERING INC.
4970 VARSITY DRIVE
LISLE, IL 60532
patrickengineering.com

USER NAME = tkoeppen(Rdwy_Lisle)	DESIGNED - KEK	REVISED -	
	DRAWN - KEK	REVISED -	
PLOT SCALE = 5.0000 ' / in.	CHECKED - SPH	REVISED -	
PLOT DATE = 7/17/2014	DATE - 6/30/2014	REVISED -	

STATE OF ILLINOIS
DEPARTMENT OF TRANSPORTATION

WASHINGTON STREET FROM HARYAN WAY TO LAKE STREET
RESTORATION CROSS SECTIONS

SCALE: AS NOTED | SHEET NO. RR 50 OF 54 | STA. 2464+00 TO STA. 2465+00

F.A.U RTE.	SECTION	COUNTY	TOTAL SHEETS	SHEET NO.
187	11-00121-11-BR	LAKE	496	305
				61A63

FED. ROAD DIST. NO. | ILLINOIS | FED. AID PROJECT

...\PenTable\Slot_GreyGrid.ctb
G:\LCDOT\21150_024\Drawings\RAIL\SHEETS\WashSt_Rail_RESTXSec_Sheets.dgn

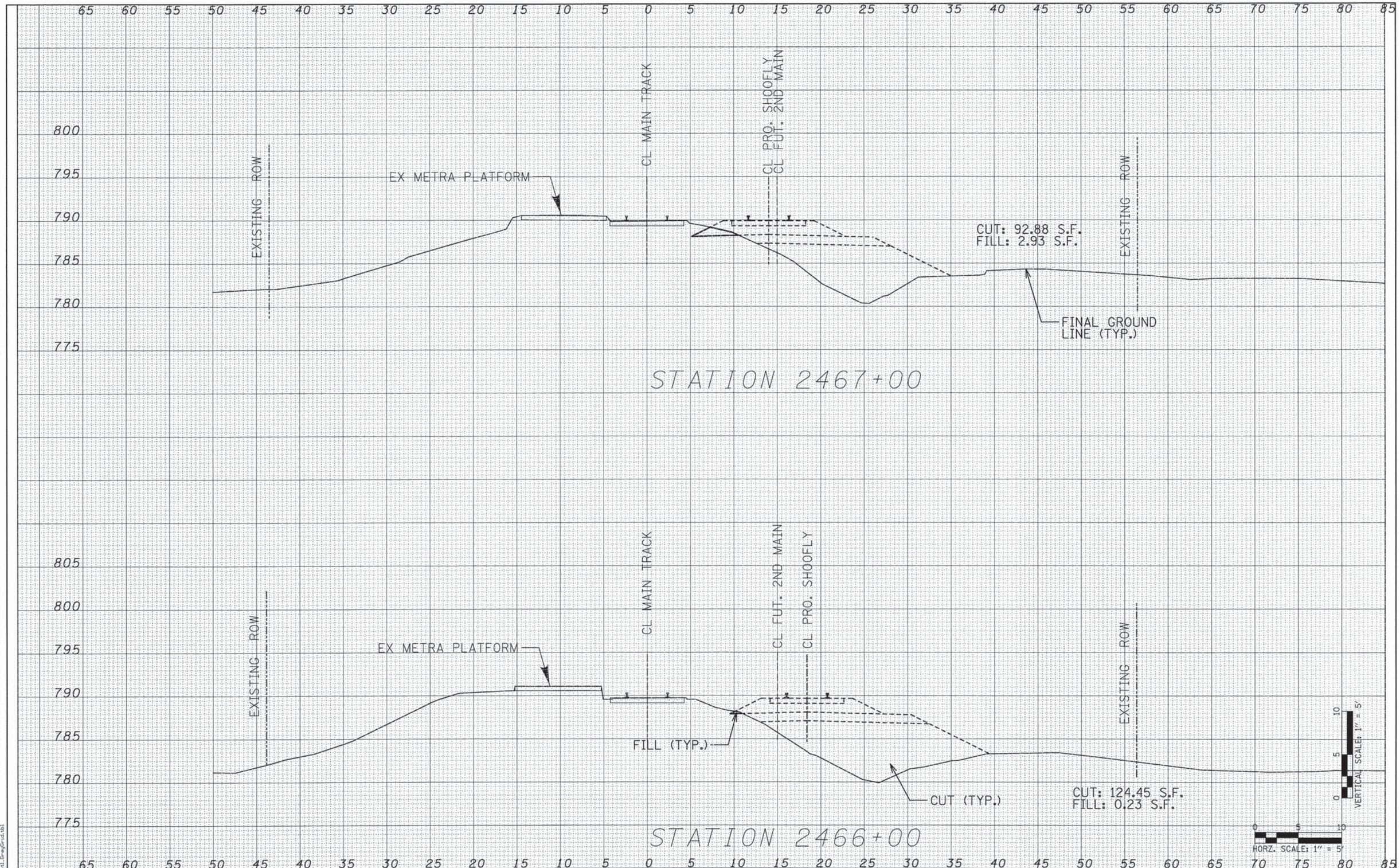

FINAL SURVEY	BY	DATE
SURVEYED		
PLOTTED		
TEMPLATE		
AREAS		
AREAS CHECKED		
NOTE BOOK		
NO.		

ORIGINAL SURVEY	BY	DATE
SURVEYED		
PLOTTED		
TEMPLATE		
AREAS		
AREAS CHECKED		
NOTE BOOK		
NO.		

PATRICK ENGINEERING INC.
4970 VARSITY DRIVE
LISLE, IL 60532
patrickengineering.com

USER NAME = tkoepper(Rdwy_Lisle)	DESIGNED - KEK	REVISED -	
	DRAWN - KEK	REVISED -	
PLOT SCALE = 5.0000 ' / in.	CHECKED - SPH	REVISED -	
PLOT DATE = 7/17/2014	DATE - 6/30/2014	REVISED -	

STATE OF ILLINOIS
DEPARTMENT OF TRANSPORTATION

WASHINGTON STREET FROM HARYAN WAY TO LAKE STREET
RESTORATION CROSS SECTIONS

SCALE: AS NOTED | SHEET NO. RR 51 OF 54 | STA. 2466+00 TO STA. 2467+00

F.A.U RTE.	SECTION	COUNTY	TOTAL SHEETS	SHEET NO.
187	11-00121-11-BR	LAKE	496	306
				61A63

FED. ROAD DIST. NO. | ILLINOIS | FED. AID PROJECT

...\PenTable\Slot1.DrwGrid.tbl

G:\LCDOT\21150_004\Drawings\RAIL\SHEETS\WashSt_Rail_RESTXSec_Sheets.dgn

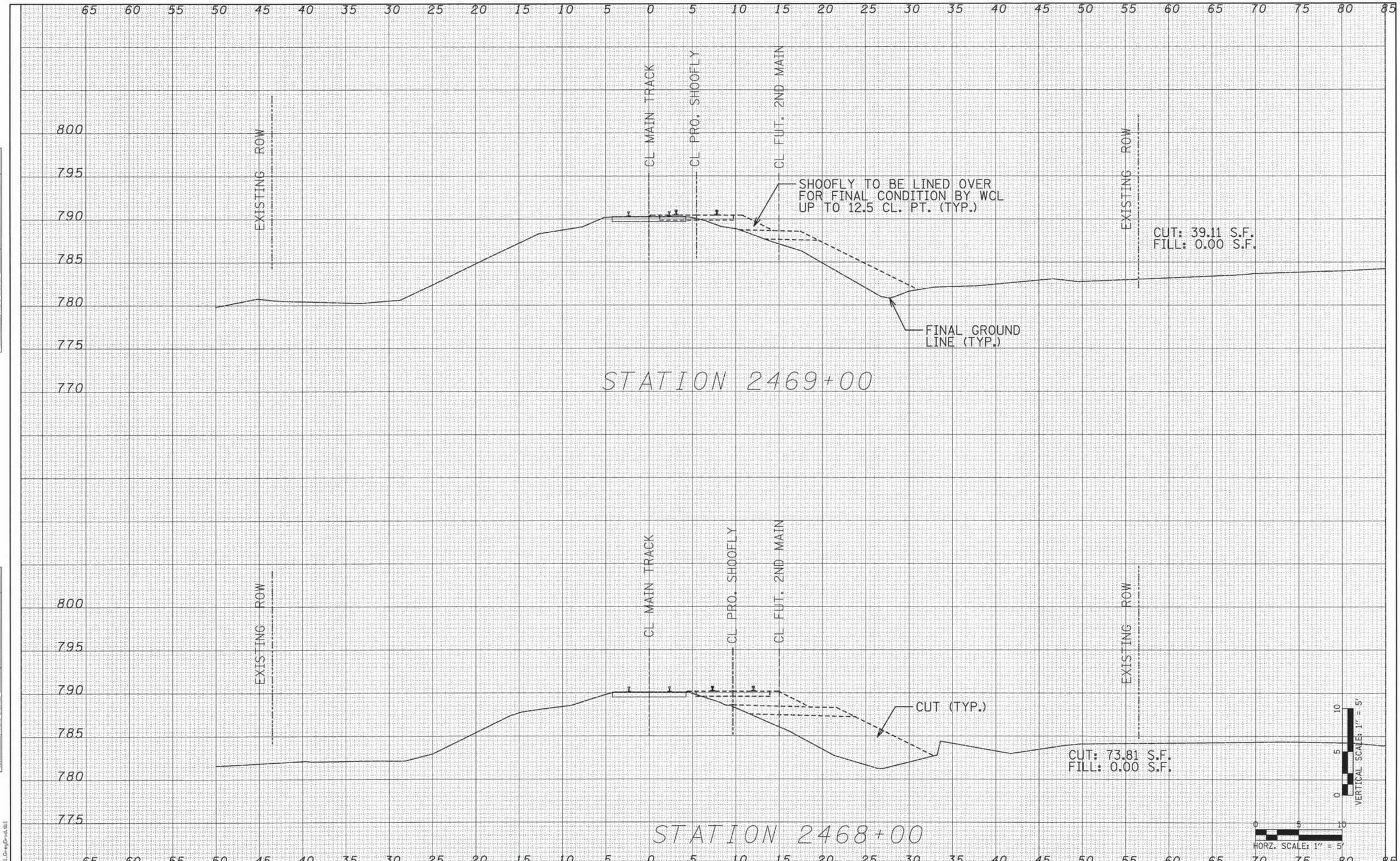

FINAL SURVEY	BY	DATE
SURVEYED		
PLOTTED		
TEMPLATE		
AREAS		
AREAS CHECKED		
NOTE BOOK NO.		

ORIGINAL SURVEY	BY	DATE
SURVEYED		
PLOTTED		
TEMPLATE		
AREAS		
AREAS CHECKED		
NOTE BOOK NO.		

PATRICK ENGINEERING INC.
4970 VARSITY DRIVE
LISLE, IL 60532
patrickengineering.com

USER NAME = tkoepper(Rdwy_Lisle)	DESIGNED - KEK	REVISED -	
	DRAWN - KEK	REVISED -	
PLOT SCALE = 5.0000 ' / in.	CHECKED - SPH	REVISED -	
PLOT DATE = 7/17/2014	DATE - 6/30/2014	REVISED -	

STATE OF ILLINOIS
DEPARTMENT OF TRANSPORTATION

WASHINGTON STREET FROM HARYAN WAY TO LAKE STREET
RESTORATION CROSS SECTIONS

SCALE: AS NOTED | SHEET NO. RR 52 OF 54 | STA. 2468+00 TO STA. 2469+00

F.A.U RTE.	SECTION	COUNTY	TOTAL SHEETS	SHEET NO.
187	11-00121-11-BR	LAKE	496	307
				61A63

FED. ROAD DIST. NO. | ILLINOIS | FED. AID PROJECT

...\PenTable\Slot1_DrwGrid.tbl

Q:\LCDOT\21150_004\Drawings\RAIL\SHEETS\WashSt_Rail_RESTXSec_Sheets.dgn

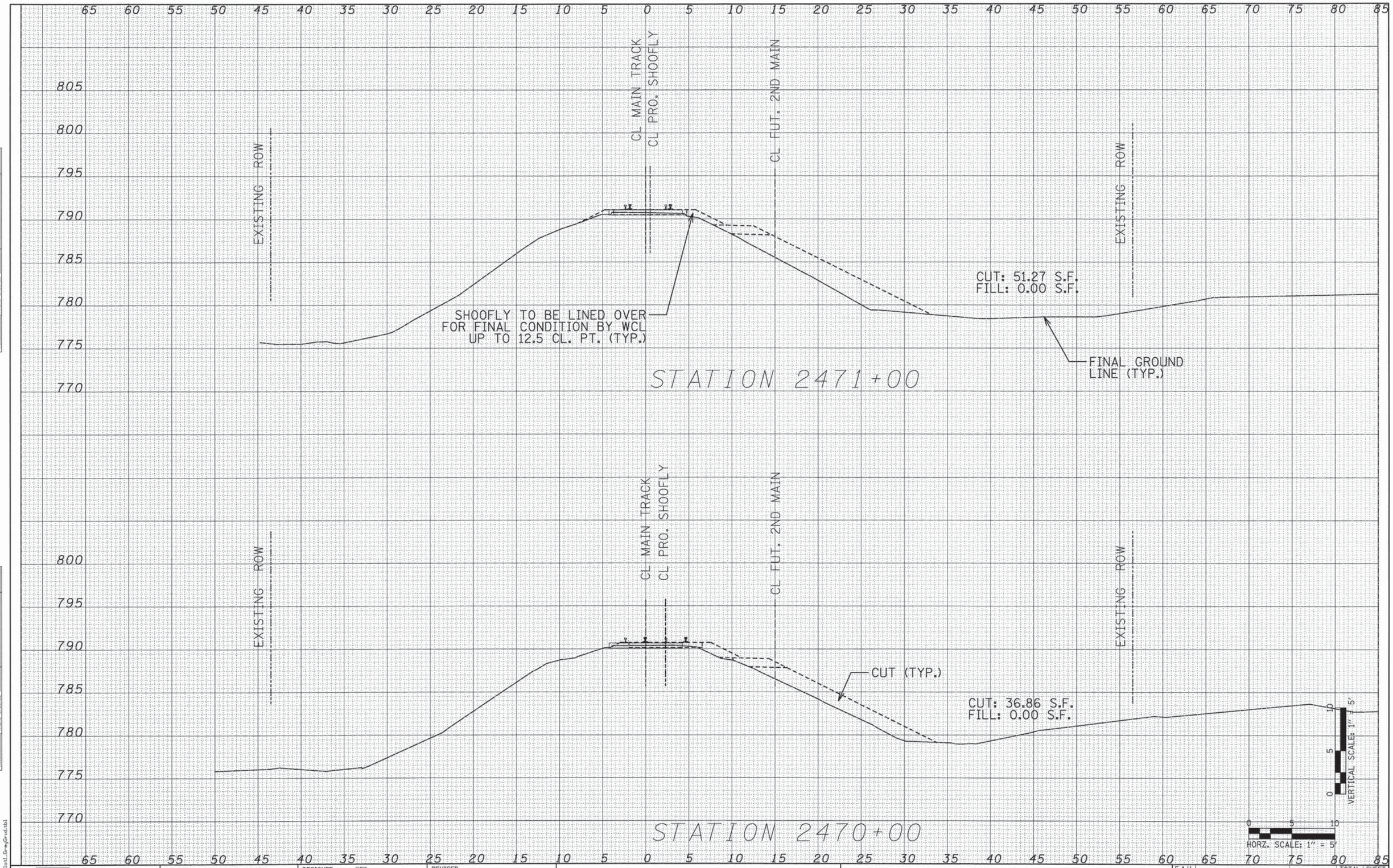

FINAL SURVEY	BY	DATE
SURVEYED		
PLOTTED		
TEMPLATE		
AREAS		
AREAS CHECKED		
NOTE BOOK		
NO.		

ORIGINAL SURVEY	BY	DATE
SURVEYED		
PLOTTED		
TEMPLATE		
AREAS		
AREAS CHECKED		
NOTE BOOK		
NO.		

...\PenTable\Slot1_GrayGrid.tbl

PATRICK ENGINEERING

PATRICK ENGINEERING INC.
4970 VARSITY DRIVE
LISLE, IL 60532
patrickengineering.com

USER NAME = tkoeppen(Rdwy_Lisle)	DESIGNED - KEK	REVISED -	
	DRAWN - KEK	REVISED -	
PLOT SCALE = 5.0000 ' / in.	CHECKED - SPH	REVISED -	
PLOT DATE = 7/17/2014	DATE - 6/30/2014	REVISED -	

STATE OF ILLINOIS
DEPARTMENT OF TRANSPORTATION

WASHINGTON STREET FROM HARYAN WAY TO LAKE STREET
RESTORATION CROSS SECTIONS

SCALE: AS NOTED | SHEET NO. RR 53 OF 54 | STA. 2470+00 TO STA. 2471+00

F.A.U RTE.	SECTION	COUNTY	TOTAL SHEETS	SHEET NO.
187	11-00121-11-BR	LAKE	496	308

61A63

FED. ROAD DIST. NO. | ILLINOIS | FED. AID PROJECT

Q:\LCDOT\21150_004\Drawings\RAIL\SHEETS\WashSt_Rail_RESTXSec_Sheets.dgn

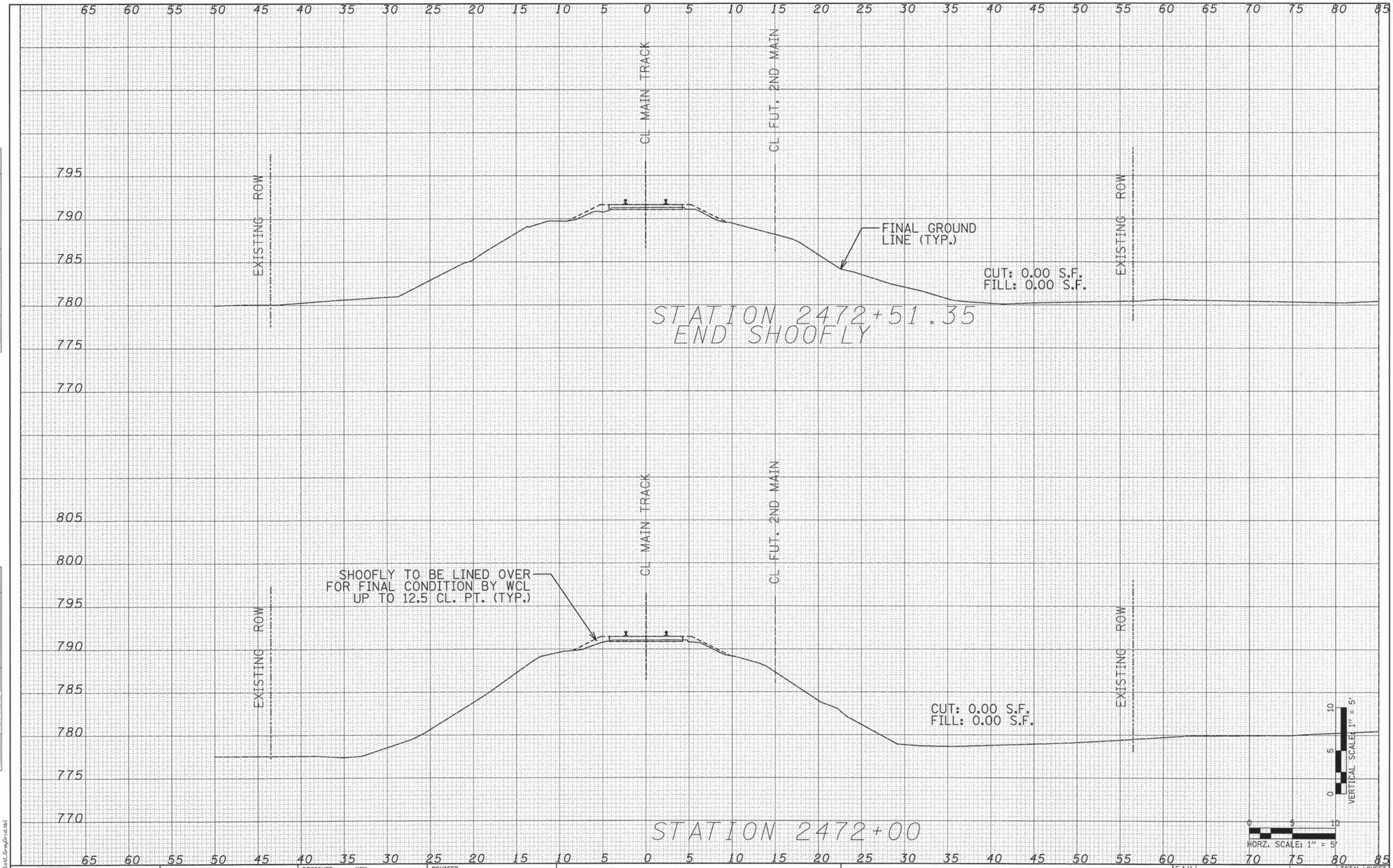

FINAL SURVEY		BY	DATE
NOTE BOOK	SURVEYED		
	PLOTTED		
	TEMPLATE		
	AREAS		
NO.	AREAS CHECKED		

ORIGINAL SURVEY		BY	DATE
NOTE BOOK	SURVEYED		
	PLOTTED		
	TEMPLATE		
	AREAS		
NO.	AREAS CHECKED		

PATRICK ENGINEERING INC.
4970 VARSITY DRIVE
LISLE, IL 60532
patrickengineering.com

USER NAME = tkoepper(Rdwy_Lisle)	DESIGNED - KEK	REVISED -	
	DRAWN - KEK	REVISED -	
PLOT SCALE = 5.0000 ' / in.	CHECKED - SPH	REVISED -	
PLOT DATE = 7/17/2014	DATE - 6/30/2014	REVISED -	

STATE OF ILLINOIS
DEPARTMENT OF TRANSPORTATION

WASHINGTON STREET FROM HARYAN WAY TO LAKE STREET
RESTORATION CROSS SECTIONS

SCALE: AS NOTED | SHEET NO. RR 54 OF 54 | STA. 2472+00 TO STA. 2472+51.35

F.A.U RTE.	SECTION	COUNTY	TOTAL SHEETS	SHEET NO.
187	11-00121-11-BR	LAKE	496	309
				61A63

FED. ROAD DIST. NO. | ILLINOIS | FED. AID PROJECT

...\PenTable\Slot1_GreyGrid.tbl

G:\LCDOT\21150.004\Drawings\RAIL\SHEETS\WashSt_Rail_RESTXSec_Sheets.dgn

F.A.U RTE.	SECTION	COUNTY	TOTAL SHEETS	SHEET NO.
187	11-00121-11-BR	LAKE	496	310
FED. ROAD DIST. NO.	ILLINOIS	CONTRACT NO. 61A63		

FOR INDEX OF SHEETS, SEE SHEET NO.2

HIGHWAY CLASSIFICATION

PRINCIPAL ARTERIAL

WASHINGTON STREET TRAFFIC DATA

2009 ADT = 16,300
2030 ADT = 18,000
POSTED SPEED = 40 MPH
DESIGN SPEED = 45 MPH

PROJECT DESCRIPTION

THE PROPOSED IMPROVEMENT CONSISTS OF THE WIDENING AND RECONSTRUCTION OF WASHINGTON STREET FROM HARYAN WAY TO LAKE STREET INCLUDING A GRADE SEPARATION AT THE WCL RAILROAD, A NEW STORM SEWER SYSTEM AND PEDESTRIAN ACCOMMODATIONS.

PROJECT LOCATED IN VILLAGE OF GRAYSLAKE

VOLUME 2 OF 2

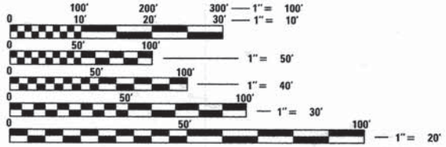

FULL SIZE PLANS HAVE BEEN PREPARED USING STANDARD ENGINEERING SCALES. REDUCED SIZED PLANS WILL NOT CONFORM TO STANDARD SCALES. IN MAKING MEASUREMENTS ON REDUCED PLANS, THE ABOVE SCALES MAY BE USED.

J.U.L.I.E.
JOINT UTILITY LOCATION INFORMATION FOR EXCAVATION
1-800-892-0123 OR 811

PLANS PREPARED BY:
PATRICK ENGINEERING INC.

CONTRACT NO. 61A63

STATE OF ILLINOIS
DEPARTMENT OF TRANSPORTATION
DIVISION OF HIGHWAYS

PLANS FOR PROPOSED FEDERAL AID HIGHWAY

FAU 187 (WASHINGTON STREET)
HARYAN WAY TO LAKE STREET
ROADWAY RECONSTRUCTION AND GRADE SEPARATION
SECTION 11-00121-11-BR
PROJECT NO. CMM-9003(923)
LAKE COUNTY
C-91-181-12

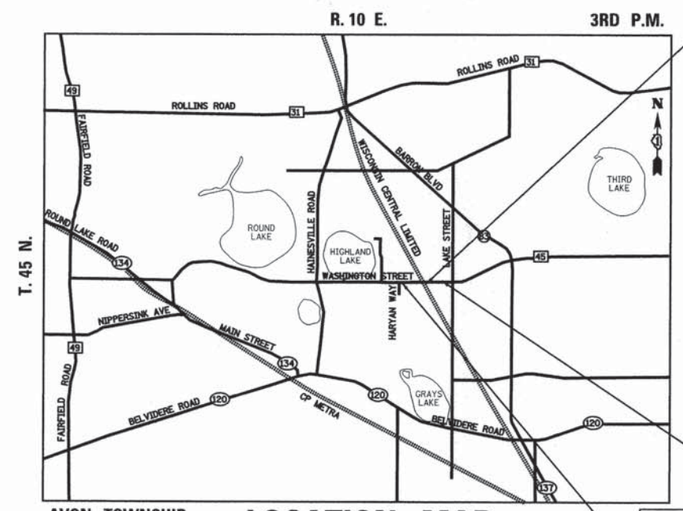

LOCATION MAP N.T.S.

GROSS LENGTH = 1,994.47 FEET = 0.38 MILE
NET LENGTH = 1,994.47 FEET = 0.38 MILE

WCL RAIL BRIDGE
SN: 049-3006
STA. 116 + 23.24

PROJECT ENDS
STA. 124 + 69.47
(MOT LIMIT 143 + 00.00)

PROJECT BEGINS
STA. 104 + 75.00
(MOT LIMIT 97 + 22.00)

LOCATION OF SECTION INDICATED THUS:-

PATRICK ENGINEERING INC.	PATRICK ENGINEERING INC.	PATRICK ENGINEERING INC.	PATRICK ENGINEERING INC.	PATRICK ENGINEERING INC.	BOLLINGER, LACH & ASSOCIATES, INC.	CDM SMITH INC.	TESKA ASSOCIATES, INC.
MICHAEL J. PINE, P.E. 7/2/2014	SARAH L. CZAPLICKI, S.E. 7/2/2014	GARY GOODHEART, P.E. 7/2/2014	STEPHEN P. HEATH, P.E. 7/2/2014	DONALD E. FREESTON, P.E.	ERIK R. OLSON, P.E.	BRANDON J. CELAYA, P.E. 7/2/2014	JODI Z. MARIANO, PLA, ASLA
NO. 062-062776	NO. 081-006191	NO. 062-055909	NO. 062-035690	NO. 062-059453	NO. 062-054976	NO. 062-063159	NO. 157-001062
EXP. DATE: 11/30/15	EXP. DATE: 11/30/14	EXP. DATE: 11/30/15	EXP. DATE: 11/30/15	EXP. DATE: 11/30/15	EXP. DATE: 11/30/15	EXP. DATE: 11/30/15	EXP. DATE: 6/31/15
APPLY TO DRAWINGS: 1-13, 17-69, 177-180, 353-496	APPLY TO DRAWINGS: 140-143, 200-217, 229-255	APPLY TO DRAWINGS: 70-128, 136	APPLY TO DRAWINGS: 256-309	APPLY TO DRAWINGS: 137-139, 144-149	APPLY TO DRAWINGS: 14-16, 134-135, 151-176, 181-199	APPLY TO DRAWINGS: 129-133	APPLY TO DRAWINGS: 150, 218-228

PRINTED BY THE AUTHORITY OF THE STATE OF ILLINOIS

INDEX OF SHEETS

SHEET NO.		
VOLUME 1		
1		COVER SHEET VOLUME 1
2		INDEX OF SHEETS AND STANDARDS
3 - 4		GENERAL NOTES
5 - 13	SOQ 1 TO 9	SUMMARY OF QUANTITIES
14 - 16	TYP 1 TO 3	TYPICAL SECTIONS
17 - 26	SHD 1 TO 10	SCHEDULE OF QUANTITIES
27 - 29	ALI 1 TO 3	ALIGNMENT, TIES, & BENCHMARKS
30 - 37	REM 1 TO 8	REMOVAL PLAN
38 - 47	PP 1 TO 10	ROADWAY PLAN AND PROFILE
48	MOT 1 TO 1	MOT GENERAL NOTES AND SEQUENCE OF CONSTRUCTION
49 - 51	MOT 2 TO 4	SUGGESTED MAINTENANCE OF TRAFFIC TYPICAL SECTIONS
52 - 55	MOT 5 TO 8	SUGGESTED SEQUENCE OF CONSTRUCTION
56 - 58	MOT 9 TO 11	SUGGESTED STAGING OF CONSTRUCTION & TRAFFIC CONTROL STAGE 1
59 - 62	MOT 12 TO 15	SUGGESTED STAGING OF CONSTRUCTION & TRAFFIC CONTROL STAGE 2
63 - 68	MOT 16 TO 21	ROADWAY RUN-AROUND PLAN AND PROFILE
69	MOT 22	DETOUR PLAN
70 - 98	ERO 1 TO 29	EROSION AND SEDIMENT CONTROL PLAN
99 - 112	DU 1 TO 14	DRAINAGE PLAN AND PROFILE
113 - 114	DU 15 TO 16	DRAINAGE SCHEDULES
115 - 118	DU 17 TO 20	GRADING PLANS AND DRAINAGE DETAILS
119 - 126	DU 21 TO 28	UTILITY PLAN AND PROFILE
127 - 128	DU 29 TO 30	UTILITY DETAILS
129 - 133	DU 31 TO 35	CLCJAWA RELOCATION
134 - 135	DU 36 TO 37	WATER MAIN DETAILS
136 - 150	PS 1 TO 15	PUMP STATION PLANS
151 - 176	PLAT 1 TO 26	PLAT OF HIGHWAYS
177 - 178	JT 1 TO 2	PAVEMENT JOINT AND ELEVATION PLAN
179 - 180	SW 1 TO 2	SIDEWALK CURB RAMP DETAILS
181 - 184	PMK 1 TO 4	PAVEMENT MARKING AND LANDSCAPE PLAN
185 - 199	SGL 1 TO 15	TRAFFIC SIGNAL PLAN
200 - 217	STR 1 TO 18	RETAINING WALL PLAN
218 - 228	STR 19 TO 29	RETAINING WALL AESTHETICS
229 - 255	S 1 TO 27	RAILROAD BRIDGE PLAN
256 - 309	RR 1 TO 54	RAILROAD PLAN

VOLUME 2	
310	COVER SHEET VOLUME 2
311	INDEX OF SHEETS AND STANDARDS
312 - 320	IDOT DISTRICT 1 STANDARDS
321 - 352	LAKE COUNTY DOT STANDARDS
353 - 415	WASHINGTON STREET CROSS SECTIONS
416 - 460	ROADWAY RUN-AROUND CROSS-SECTIONS
461 - 496	RUN-AROUND RESTORATION CROSS SECTIONS
497	EXISTING DRAIN TILE PLAN

IDOT DISTRICT 1 HIGHWAY STANDARDS

STANDARD NO.	ITEM DESCRIPTION
BD07	STORM SEWER CONNECTION TO EXISTING SEWER
BD08	FRAMES AND LIDS ADJUSTMENT WITH MILLING
BD24	CURB OR CURB AND GUTTER REMOVAL AND REPLACEMENT
BD32	BUTT JOINT AND HMA TAPER DETAILS
BD37	MANHOLE TYPE A 7 FOOT DIAMETER
BD51	BENCHING DETAIL FOR EMBANKMENT WIDENING
TC11	RAISED REFLECTIVE PAVEMENT MARKERS (SNOW-PLOW RESISTANT)
TC14	TRAFFIC CONTROL AND PROTECTION AT TURN BAYS (TO REMAIN OPEN TO TRAFFIC)
TC21	DETOUR SIGNING FOR CLOSING STATE HIGHWAYS
TS05	STANDARD TRAFFIC SIGNAL DESIGN DETAILS

LCDOT HIGHWAY STANDARDS

STANDARD NO.	ITEM DESCRIPTION
LC0020	TRENCH WIDTHS FOR TRENCH BACKFILL & PAVEMENT REPLACEMENT BITUMINOUS
LC0021	DRAINAGE FACILITIES & EARTHEN BERM CONSTRUCTED ADJACENT TO HIGHWAY R.O.W.
LC2000	UNDERCUT DETAIL
LC2050	TEMPORARY DITCH CHECK INSTALLATION FOR ROADWAY OR DRAINAGE DITCH
LC2051	PERIMETER EROSION BARRIER INSTALLATION
LC2200	VEGETATION MAINTENANCE REQUIRED CLEARANCE FOR 10' BIKEPATH
LC3000	CURB & GUTTER SUBGRADE OPTIONS
LC4101	TYPICAL MAJOR ACCESS (COMMERCIAL ENTRANCE)
LC4201	CURB RAMPS WITH TRAFFIC SIGNAL POSTS & MAST ARMS
LC4202	CONCRETE WASHOUT FACILITIES
LC4800	TRANSITION FROM AGGREGATE SHOULDER TO B-6.24 FOR 16' OFFSET TO FACE
LC5400	TREE PRESERVATION WITH STORM SEWER IN UNCURBED AREAS
LC5401	TYPICAL PLACEMENT OF PRECAST END SECTIONS ON CROSSROAD CULVERTS
LC5402	JOINT TIES FOR CONCRETE PIPE
LC6003	DRAINAGE STRUCTURE RIM ELEVATIONS AND OFFSETS
LC6020	SUB-SURFACE DRAINS
LC6602	ORNAMENTAL FENCE THREE RAIL W/ RINGS (ONE MFGR'S DETAILS)
LC6650	WITNESS POST
LC7000	MODIFIED STANDARD 701011 TWO LANE, TWO WAY, OFF-ROAD OPERATIONS DAY OPERATIONS ONLY
LC7003	MODIFIED STANDARD 701701 URBAN LANE CLOSURE MULTILANE INTERSECTION
LC7004	MODIFIED DISTRICT 1 STANDARD TRAFFIC CONTROL AND PROTECTION FOR SIDE ROADS, INTERSECTIONS AND DRIVEWAYS
LC7005	TYPICAL LANE CLOSURE 3 LANE ROAD SECTION
LC7200	DIRECTION INDICATOR BARRICADES
LC7201	TEMPORARY CONSTRUCTION INFORMATION SIGNS
LC7203	WORK ZONE SPEED LIMIT SIGNING DIAGRAM
LC7800	TYPICAL PAVEMENT MARKINGS FOR COUNTY HIGHWAYS
LC7802	SHORT TERM PAVEMENT MARKINGS
LC7803	TYPICAL PAVEMENT MARKINGS FOR RAILROAD CROSSINGS ON COUNTY HIGHWAYS
LC7805	RECESSED REFLECTIVE PAVEMENT MARKER
LC8502	RECTANGULAR RAPID FLASHING BEACON (RRFB) SYSTEM
LC8600	TYPICAL DETECTOR LOOP LAYOUTS
LC8900	VIDEO DETECTION DETAILS

STANDARD NO.	ITEM DESCRIPTION
000001-06	STANDARD SYMBOLS, ABBREVIATIONS, AND PATTERNS
280001-07	TEMPORARY EROSION CONTROL SYSTEMS
420001-07	PAVEMENT JOINTS
424001-07	PERPENDICULAR CURB RAMPS FOR SIDEWALKS
424016-01	MID-BLOCK CURB RAMPS FOR SIDEWALKS
515001-03	NAME PLATE FOR BRIDGES
542301-03	PRECAST REINFORCED CONCRETE FLARED END SECTION
542311-05	TRAVERSABLE PIPE GRATE
601001-04	SUB-SURFACE DRAINS
601101-01	CONCRETE HEADWALL FOR PIPE DRAIN
602001-02	CATCH BASIN TYPE A
602011-02	CATCH BASIN TYPE C
602301-04	INLET - TYPE A
602401-03	MANHOLE TYPE A
602406-06	MANHOLE TYPE A 6' DIAMETER
602411-04	MANHOLE TYPE A 7' DIAMETER
602601-03	PRECAST REINFORCED CONCRETE FLAT SLAB TOP
602701-02	MANHOLE STEPS
604001-03	FRAME AND LIDS TYPE 1
604036-02	GRATE TYPE 8
604091-02	FRAME AND GRATE TYPE 24
606001-05	CONCRETE CURB TYPE B AND COMBINATION CONCRETE CURB AND GUTTER
606006-02	OUTLETS FOR CONCRETE CURB AND GUTTER TYPE B-6.24
606301-04	PC CONCRETE ISLANDS AND MEDIANS
635011-02	REFLECTOR MARKER AND MOUNTING DETAILS
666001-01	RIGHT OF WAY MARKERS
667101-02	PERMANENT SURVEY MARKERS
701001-02	OFF-RD OPERATIONS, 2L 2W, MORE THAN 15' AWAY
701006-05	OFF-RD OPERATIONS, 2L 2W, 15' TO 24" FROM PAVEMENT EDGE
701101-04	OFF-RD OPERATIONS, MULTILANE, 15' TO 24" FROM PAVEMENT EDGE
701106-02	OFF-RD OPERATIONS, MULTILANE, MORE THAN 15' AWAY
701201-04	LANE CLOSURE, 2L 2W, DAY ONLY, FOR SPEEDS >= 45 MPH
701301-04	LANE CLOSURE, 2L, 2W, SHORT TIME OPERATIONS
701306-03	LANE CLOSURE, 2L, 2W, SLOW MOVING OPERATIONS DAY ONLY, FOR SPEEDS >= 45 MPH
701311-03	LANE CLOSURE, 2L 2W, MOVING OPERATIONS - DAY ONLY
701331-04	LANE CLOSURE, 2L 2W, WITH RUN-AROUND, FOR SPEEDS >= 45 MPH
701427-02	LANE CLOSURE, MULTILANE, INTERMITTENT OR MOVING OPER., FOR SPEEDS <= 40 MPH
701502-06	URBAN LANE CLOSURE, 2L, 2W WITH BIDIRECTIONAL LEFT TURN LANE
701602-07	URBAN LANE CLOSURE, MULTILANE, 2W WITH BIDIRECTIONAL LEFT TURN LANE
701801-05	SIDWALK, CORNER OR CROSSWALK CLOSURE
701901-03	TRAFFIC CONTROL DEVICES
704001-07	TEMPORARY CONCRETE BARRIER
780001-04	TYPICAL PAVEMENT MARKINGS
805001-01	ELECTRICAL SERVICE INSTALLATION DETAILS
814001-02	HANDHOLES
814006-02	DOUBLE HANDHOLES
878001-09	CONCRETE FOUNDATION DETAILS
B.L.R. 26-3	STEEL PLATE BEAM GUARDRAIL 29" HEIGHT

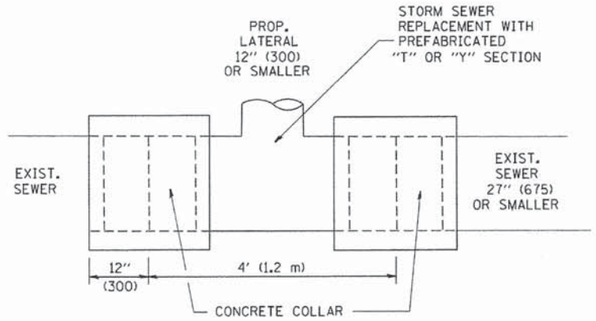

DETAIL "A"

LATERAL CONNECTION TO EXISTING SEWER
OF 27" (675) OR SMALLER

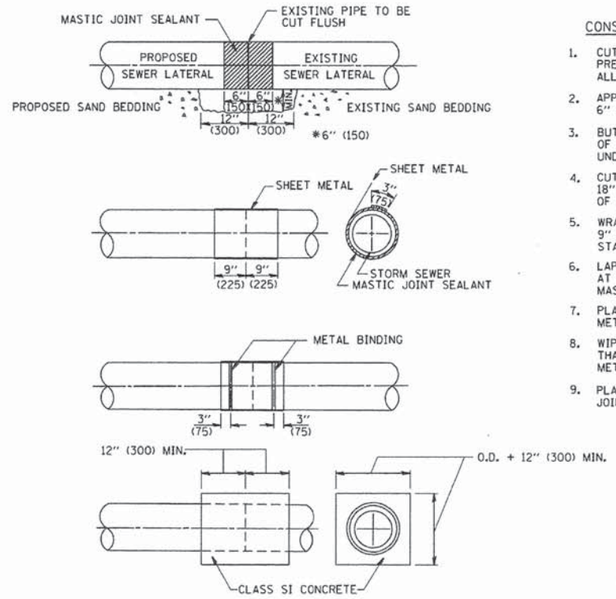

DETAIL "B"

CLASS SI CONCRETE COLLAR

CONSTRUCTION SEQUENCE

1. CUT THE EXISTING END OF THE PIPE SO AS TO PRESENT A FLUSH BUTT JOINT. BRUSH AND CLEAN ALL PIPES.
2. APPLY THE MASTIC JOINT SEALANT TO THE FIRST 6" (150) OF EACH PIPE.
3. BUTT THE PIPES TOGETHER LEAVING A MINIMUM OF 12' x 6' (300 x 150) DEEP EXCAVATION UNDER AND AROUND EACH PIPE END.
4. CUT A PIECE OF SHEET METAL GAGE NO. 19 1.1 (0.0418) 18" (450) WIDE BY THE OUTSIDE CIRCUMFERANCE OF THE PIPE PLUS 3" (75) LONG.
5. WRAP THE SHEET METAL AROUND THE PIPES, 9" (225) ON EACH SIDE OF THE JOINT, STARTING AT THE TOP OF THE PIPE.
6. LAP THE SHEET METAL AT LEAST 3" (75) AT THE TOP OF THE PIPE AND PLACE THE MASTIC JOINT SEALANT BETWEEN THE LAP.
7. PLACE TWO METAL BANDS AROUND THE SHEET METAL AND TIGHTEN.
8. WIPE OFF ANY EXCESS MASTIC JOINT SEALANT THAT OOZES OUT FROM BETWEEN THE SHEET METAL AND THE PIPES.
9. PLACE CLASS SI CONCRETE AROUND THE JOINT.

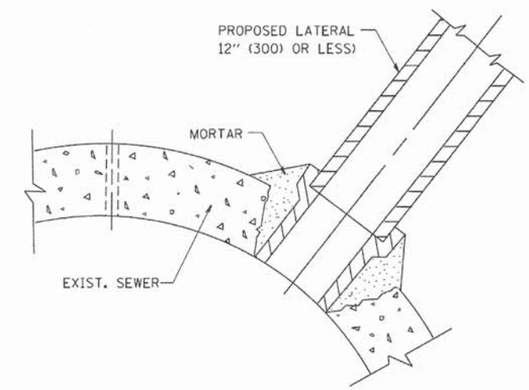

DETAIL "C"

PROPOSED LATERAL
CONNECTION TO EXISTING SEWER
OF 30" (750) OR LARGER

NOTES

MATERIAL

MATERIAL USED FOR THE TEE OR WYE SECTION SHALL BE COMPATIBLE WITH THE EXISTING STORM SEWER OR THE PROPOSED STORM SEWER.

CONSTRUCTION METHODS

I. THIS WORK SHALL BE CONSTRUCTED IN CONFORMANCE WITH THE APPLICABLE PORTIONS OF SECTION 550 OF THE STANDARD SPECIFICATIONS.

II. CONNECTION TO AN EXISTING STORM SEWER SHALL BE BY EITHER OF THE FOLLOWING METHODS:

A) PROPOSED STORM SEWER CONNECTION TO EXISTING SEWER OF 27" (675) OR SMALLER SEE DETAIL "A" AND "B".

B) PROPOSED STORM SEWER CONNECTION TO EXISTING SEWER OF 30" (750) OR LARGER SEE DETAIL "C".

IF THE EXISTING SEWER PIPE IS CRACKED, BROKEN OR OTHERWISE DAMAGED BY THE CONTRACTOR IN MAKING THE CIRCULAR OPENING, THE CONTRACTOR SHALL REPLACE THAT SECTION OF PIPE WITH PIPE EQUAL AND SIMILAR IN ALL RESPECTS TO THE PIPE IN THE EXISTING SEWER, IN A CAREFUL WORKMANLIKE MANNER, WITHOUT EXTRA COMPENSATION.

GENERAL

CARE MUST BE TAKEN TO PREVENT DEBRIS FROM ENTERING THE SEWER. ALL DEBRIS WHICH ENTERS THE SEWER MUST BE REMOVED. THE SEWER MUST BE LEFT CLEAN AND UNOBSTRUCTED UPON COMPLETION OF THE CONTRACT.

CARE MUST BE TAKEN TO PREVENT ANY PART OF THE NEW PIPE CONNECTION FROM PROJECTING INTO THE EXISTING SEWER.

BASIS OF PAYMENT

TEE OR WYE CONNECTIONS SHALL BE PAID FOR AT THE CONTRACT UNIT PRICE EACH FOR STORM SEWER TEE OR WYE OF THE TYPE AND SIZE SPECIFIED IN THE PLANS. THIS PRICE SHALL INCLUDE ALL EXCAVATION OF THE TRENCH, REMOVAL OF THE EXISTING STORM SEWER, FURNISHING AND INSTALLING THE SPECIFIED TEE OR WYE SECTION, FURNISHING AND INSTALLING THE REQUIRED CONCRETE COLLAR, AND ALL OTHER MATERIAL NECESSARY TO COMPLETE THIS WORK AS SHOWN AND SPECIFIED.

REMOVAL AND REINSTALLATION OF EXISTING STORM SEWER ADJACENT TO THE PROPOSED TEE OR WYE SECTION, FOR THE PURPOSE OF FACILITATING THE INSTALLATION OF THE TEE OR WYE SECTION, WILL NOT BE PAID FOR SEPARATELY BUT SHALL BE INCLUDED IN THE UNIT PRICE BID FOR THE WORK.

TRENCH BACKFILL, EXCAVATION IN ROCK AND REMOVAL AND REPLACEMENT OF UNSUITABLE MATERIAL BELOW PLAN BEDDING GRADE WILL BE PAID FOR SEPARATELY.

CONCRETE COLLAR FOR CONNECTING A PROPOSED STORM SEWER TO AN EXISTING STORM SEWER WILL NOT BE PAID PAID FOR SEPARATELY BUT SHALL BE INCLUDED IN THE COST OF THE PROPOSED STORM SEWER.

ALL DIMENSIONS ARE IN INCHES (MILLIMETERS) UNLESS OTHERWISE SHOWN.

FILE NAME = W:\diststd\22x34\bd07.dgn	USER NAME = gaglianobt	DESIGNED - M. DE YONG	REVISED - M. DE YONG 05-08-92	STATE OF ILLINOIS DEPARTMENT OF TRANSPORTATION	DETAIL OF STORM SEWER CONNECTION TO EXISTING SEWER			F.A.U. RTE.	SECTION	COUNTY	TOTAL SHEETS / SHEET NO.
		DRAWN -	REVISED - R. SHAH 09-09-94					187	11-00121-11-BR	LAKE	496 / 312
	PLOT SCALE = 50.000 ' / IN.	CHECKED -	REVISED - R. SHAH 10-25-94					BD500-01 (BD-7)		CONTRACT NO. 61A63	
	PLOT DATE = 1/4/2008	DATE - 07-25-90	REVISED - R. SHAH 06-12-96		SCALE: NONE	SHEET NO. 1 OF 1 SHEETS	STA. TO STA.	FED. ROAD DIST. NO. 1	ILLINOIS	FED. AID PROJECT	

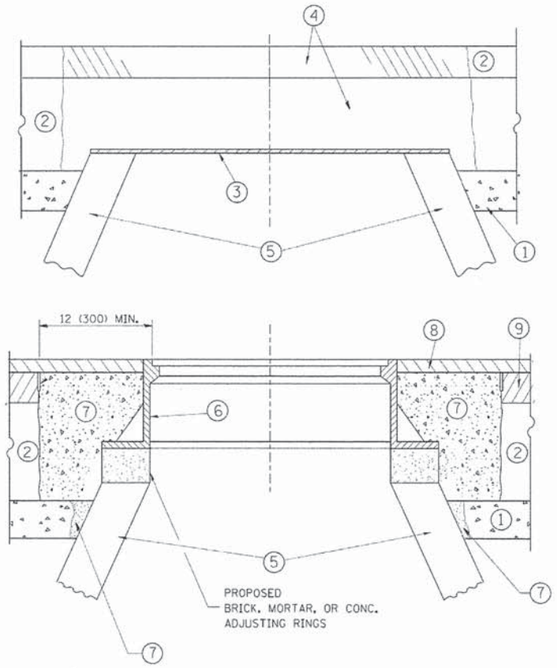

CONSTRUCTION PROCEDURES

STAGE 1 (BEFORE PAVEMENT MILLING)

A) REMOVE A MINIMUM OF 12 (300) OF THE PAVEMENT FROM AROUND THE STRUCTURE.
B) REMOVE THE EXISTING FRAME AND LID FROM THE STRUCTURE.
C) COVER THE STRUCTURE OPENING WITH A 36 (900) DIAMETER METAL PLATE.
D) BACKFILL WITH CRUSHED STONE AND A MINIMUM 1½ (40) THICK HMA SURFACE MIX APPROVED BY THE ENGINEER.

STAGE 2 (AFTER PAVEMENT MILLING)

A) REMOVE THE HMA SURFACE MIX AND CRUSHED STONE.
B) INSTALL THE FRAME AND LID; ADJUST THE FRAME TO ITS FINAL SURFACE ELEVATION.
C) THE SURROUNDING SPACE SHALL BE FILLED WITH CLASS PP-1* CONCRETE TO THE ELEVATION OF THE SURFACE OF THE EXISTING BASE COURSE OR THE BINDER COURSE.

* UNLESS OTHERWISE SPECIFIED IN THE PLANS.

THE PROCEDURE EXPLAINED ABOVE SHALL CONFORM TO THE APPLICABLE PORTIONS OF SECTIONS 353, 406, 602, AND 603 OF THE STANDARD SPECIFICATIONS EXCEPT THAT "THE CONTRACTOR SHALL ADJUST THE STRUCTURES TO THE FINISHED PAVEMENT ELEVATION NO MORE THAN 5 CALENDAR DAYS PRIOR TO PLACEMENT OF THE FINAL LIFT OF SURFACE UNLESS APPROVED BY THE ENGINEER."

LEGEND

1. SUB-BASE GRANULAR MATERIAL
2. EXISTING PAVEMENT
3. 36 (900) DIAMETER METAL PLATE
4. PROPOSED CRUSHED STONE AND HMA SURFACE MIX
5. EXISTING STRUCTURE
6. FRAME AND LID (SEE NOTES)
7. CLASS PP-1* CONCRETE
8. PROPOSED HMA SURFACE COURSE
9. PROPOSED HMA BINDER COURSE

NOTES:

EXISTING BROKEN FRAMES AND LIDS SHALL BE REMOVED AND DISPOSED OF BY THE CONTRACTOR AND SHALL BE REPLACED AS DIRECTED BY THE ENGINEER. REPLACEMENT FRAMES AND LIDS WILL BE PAID FOR IN ACCORDANCE WITH ARTICLE 109.04 OF THE STANDARD SPECIFICATIONS UNLESS A SEPARATE PAY ITEM HAS BEEN PROVIDED.

IF THE EXISTING LIDS ARE OPEN, THE FRAME WILL BE ADJUSTED TO THE ELEVATION OF THE MILLED PAVEMENT SURFACE PRIOR TO THE MILLING OPERATION. THE FRAME WILL NOT BE REMOVED AND COVERED BY THE METAL PLATE.

CITY OF CHICAGO CASTINGS ARE THE PROPERTY OF THE CITY AND THE CONTRACTOR SHALL NOTIFY THE CITY FOR REMOVAL AND DISPOSITION OF THE CASTINGS.

THE METAL PLATE USED TO COVER THE STRUCTURE SHALL REMAIN THE PROPERTY OF THE CONTRACTOR.

WHEN STRUCTURES ARE TO BE ADJUSTED OR RECONSTRUCTED, THE LOWERING AND RAISING OF THE FRAMES AND LIDS WILL NOT BE PAID FOR SEPARATELY BUT WILL BE INCLUDED IN THE COST OF THE CORRESPONDING PAY ITEM.

LOCATION OF STRUCTURES:

THE CONTRACTOR WILL BE REQUIRED TO KEEP A RECORD OF THE LOCATIONS OF THE BURIED STRUCTURES ACCORDING TO THE STATION AND DISTANCE LEFT OR RIGHT OF THE CENTERLINE OF PAVEMENT. UPON COMPLETION OF THE WORK, THE CONTRACTOR WILL DELIVER THE RECORD TO THE ENGINEER.

BASIS OF PAYMENT:

REMOVING FRAMES AND LIDS ON DRAINAGE AND UTILITY STRUCTURES IN THE PAVEMENT PRIOR TO MILLING, AND ADJUSTING TO FINAL GRADE PRIOR TO PLACING THE SURFACE COURSE, WILL BE PAID FOR AT THE CONTRACT UNIT PRICE EACH FOR "FRAMES AND LIDS TO BE ADJUSTED (SPECIAL)."

THIS WORK WILL NOT BE PAID FOR WHEN DRAINAGE AND UTILITY STRUCTURES ARE SPECIFIED FOR PAYMENT AS STRUCTURE RECONSTRUCTION.

NEW FRAMES AND LIDS, WHEN SPECIFIED, WILL BE PAID FOR SEPARATELY.

DETAILS FOR FRAMES AND LIDS ADJUSTMENT WITH MILLING

ALL DIMENSIONS ARE IN INCHES (MILLIMETERS) UNLESS OTHERWISE SHOWN

FILE NAME = c:\pw_work\pwidot\bauerdl\d0108315\bd08.dgn	USER NAME = bauerdl	DESIGNED - R. SHAH	REVISED - R. WIEDEMAN 05-14-04	STATE OF ILLINOIS DEPARTMENT OF TRANSPORTATION	DETAILS FOR FRAMES AND LIDS ADJUSTMENT WITH MILLING	F.A.U. RTE.	SECTION	COUNTY	TOTAL SHEETS	SHEET NO.
		DRAWN -	REVISED - R. BORO 01-01-07			187	11-00121-11-BR	LAKE	496	313
	PLOT SCALE = 1968.5000 ' / in	CHECKED -	REVISED - R. BORO 03-09-11			BD600-03 (BD-8)		CONTRACT NO. 61A63		
	PLOT DATE = 12/6/2011	DATE - 10-25-94	REVISED - R. BORO 12-06-11		SCALE: NONE / SHEET NO. 1 OF 1 SHEETS / STA. TO STA.	FED. ROAD DIST. NO. 1	ILLINOIS	FED. AID PROJECT		

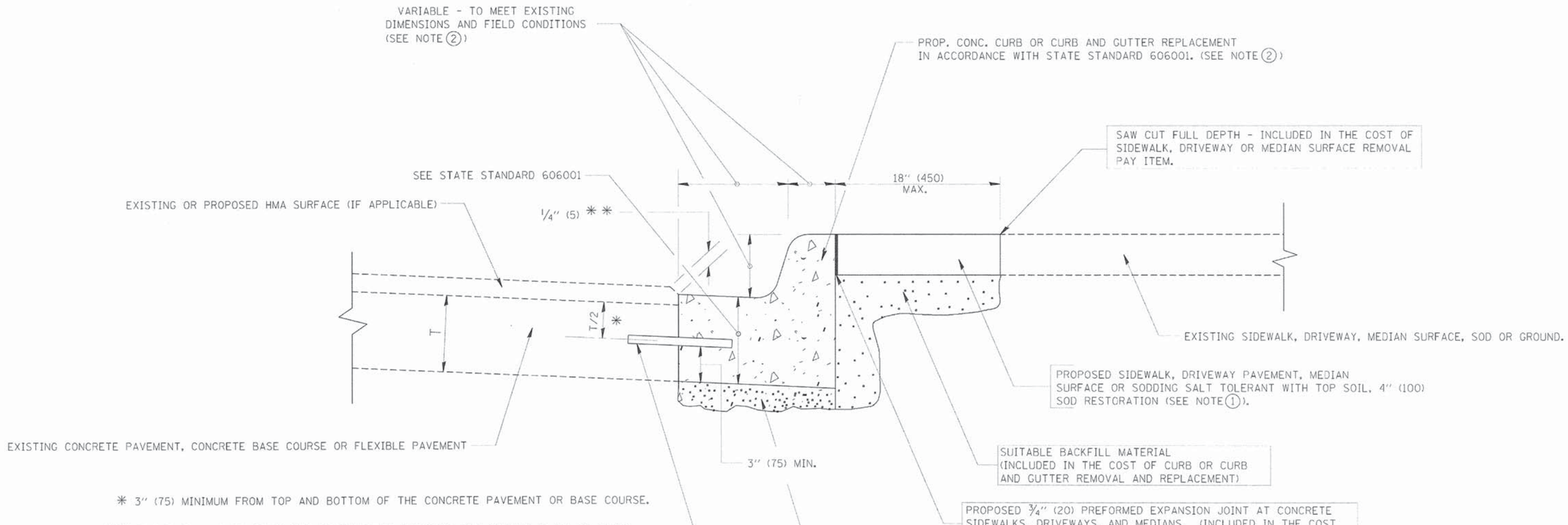

* 3" (75) MINIMUM FROM TOP AND BOTTOM OF THE CONCRETE PAVEMENT OR BASE COURSE.

* * IF THE FINAL SURFACE OF THE PAVEMENT IS CONCRETE, THE GUTTER IS TO BE FLUSH WITH THE PAVEMENT.

NOTE: (1) SIDEWALK, DRIVEWAY PAVEMENT OR MEDIAN SURFACE SHALL BE SIMILAR TO THE MATERIAL BEING REMOVED AND WILL BE PAID FOR SEPARATELY.

SODDING, SALT TOLERANT AND TOP SOIL, FURNISH AND PLACE 4" WILL BE PAID FOR SEPARATELY.

(2) FERTILIZER FOR THE PLACEMENT OF THE SOD IS NOT REQUIRED

(3) CURB OR CURB AND GUTTER REPLACEMENT SHALL MATCH THE SHAPE OF THE EXISTING CURB OR CURB AND GUTTER UNLESS OTHERWISE SPECIFIED.

(4) FOR CURB OR CURB AND GUTTER REMOVAL AND REPLACEMENT ADJACENT TO FLEXIBLE PAVEMENT DELETE EPOXY COATED TIE BARS.

(5) LONGITUDINAL BARS, IF ENCOUNTERED IN THE EXISTING CURB OR CURB AND GUTTER, ARE NOT TO BE REPLACED. CUTTING AND REMOVING LONGITUDINAL BARS SHALL BE INCLUDED IN THE COST OF CURB OR CURB AND GUTTER REMOVAL AND REPLACEMENT.

(6) THE COST OF HMA SURFACE REMOVAL IN THE EXISTING GUTTER FLAG SHALL BE INCLUDED IN THE COST OF THE CURB AND GUTTER REMOVAL AND REPLACEMENT.

(7) THE REMOVAL AND REPLACEMENT OF THE EXISTING CURB OR CURB AND GUTTER SHALL BE DONE IN ACCORDANCE WITH THE APPLICABLE PORTIONS OF SECTION 440 AND 606 OF THE STANDARD SPECIFICATIONS.

(8) THE LOCATIONS OF REMOVAL AND REPLACEMENT OF EXISTING CURB OR CURB AND GUTTER SHALL BE DETERMINED BY THE RESIDENT ENGINEER AT THE TIME OF CONSTRUCTION.

BASIS OF PAYMENT:

THIS WORK WILL BE PAID FOR AT THE CONTRACT UNIT PRICE PER FOOT (METER) FOR "CURB REMOVAL AND REPLACEMENT" OR "COMBINATION CONCRETE CURB AND GUTTER REMOVAL AND REPLACEMENT".

CURB OR CURB AND GUTTER REMOVAL AND REPLACEMENT

ALL DIMENSIONS ARE IN INCHES (MILLIMETERS) UNLESS OTHERWISE SHOWN.

FILE NAME = c:\pw_work\pwidot\drivakosgn\d286315\bd24.dgn	USER NAME = drivakosgn	DESIGNED - A. HOUSEH	REVISED - R. SHAH 10-03-96	STATE OF ILLINOIS DEPARTMENT OF TRANSPORTATION	CURB OR CURB AND GUTTER REMOVAL AND REPLACEMENT	F.A.U. RTE.	SECTION	COUNTY	TOTAL SHEETS	SHEET NO.
	PLOT SCALE = 50.000 ' / IN.	DRAWN -	REVISED - A. ABBAS 03-21-97			187	11-00121-11-BR	LAKE	496	314
	PLOT DATE = 12/15/2009	CHECKED -	REVISED - M. GOMEZ 01-22-01			BD600-06 (BD-24)		CONTRACT NO. 61A63		
		DATE - 03-11-94	REVISED - R. BORO 12-15-09		SCALE: NONE / SHEET NO. 1 OF 1 SHEETS / STA. / TO STA.	FED. ROAD DIST. NO. 1	ILLINOIS	FED. AID PROJECT		

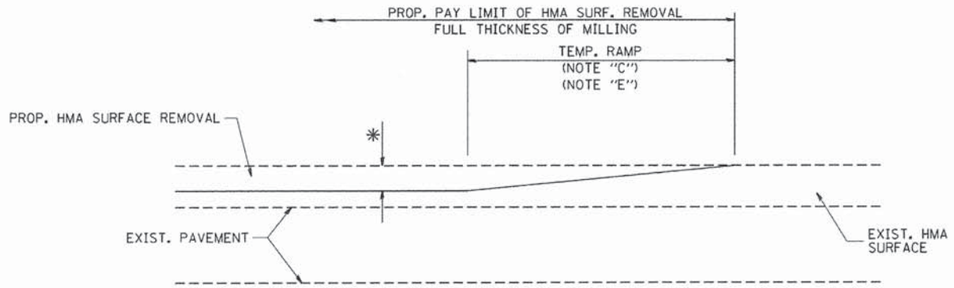

MILLED TEMPORARY RAMP

(FOR BUTT JOINT AND HMA TAPER SEE DETAIL BELOW)

OPTION 1

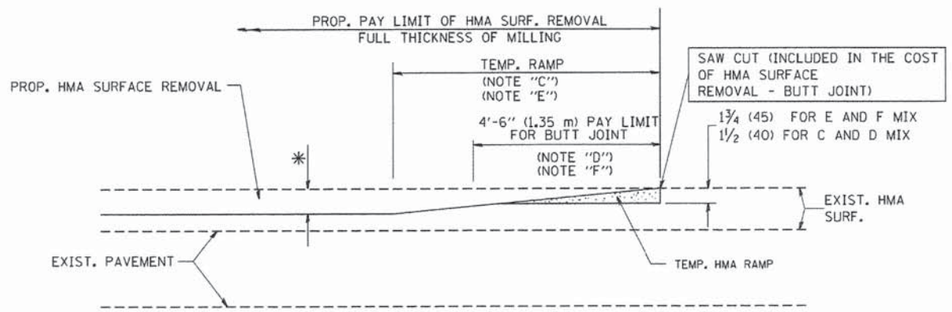

HMA CONSTRUCTED TEMPORARY RAMP

(FOR BUTT JOINT AND HMA TAPER SEE DETAIL BELOW)

OPTION 2

TYPICAL TEMPORARY RAMP

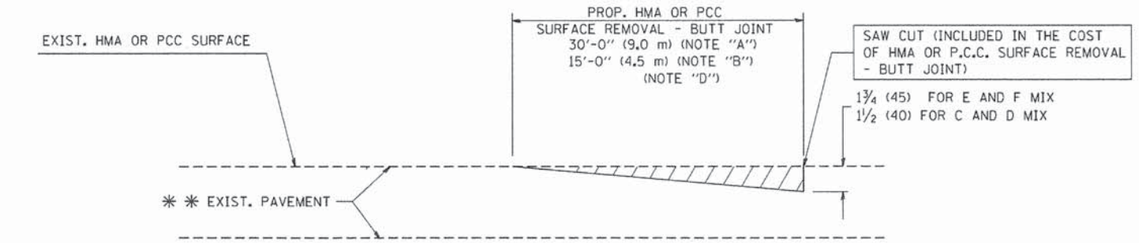

BUTT JOINT DETAIL

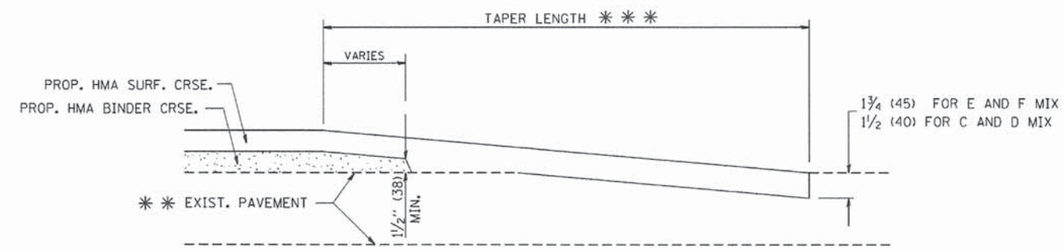

HMA TAPER DETAIL

TYPICAL BUTT JOINT AND HMA TAPER
FOR RESURFACING ONLY

* * PC CONCRETE, HMA OR HMA RESURFACED PAVEMENT.

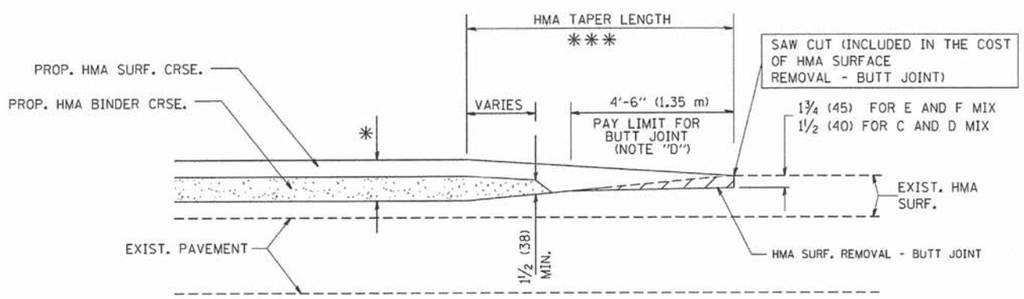

BUTT JOINT AND
HMA TAPER

TYPICAL BUTT JOINT AND HMA TAPER
FOR MILLING AND RESURFACING

NOTES

A: MAINLINE ROADWAYS AND MAJOR SIDE ROADS.

B: MINOR SIDE ROADS.

C: THE TEMP. RAMP SHALL BE CONSTRUCTED IMMEDIATELY UPON REMOVAL OF THE EXISTING HMA SURFACE.

D: THE BUTT JOINT SHALL BE CONSTRUCTED IMMEDIATELY PRIOR TO PLACING THE PROPOSED HMA COURSES.

E: TAPER THE TEMP. RAMP AT A RATE OF 3'-0" (900 mm) PER 1 INCH (25 mm) OF MILLING THICKNESS.

F: INSTALLATION AND REMOVAL OF THE 4'-6" (1.35 m) TEMP. RAMP IS INCLUDED IN COST OF HMA SURFACE REMOVAL - BUTT JOINT

G: SEE ARTICLE 406.08 AND 406.14 OF THE STANDARD SPECIFICATIONS FOR "HMA AND/OR PCC SURFACE REMOVAL, BUTT JOINT".

* SEE TYPICAL SECTIONS FOR MILLING THICKNESS.

* * * 20'-0" (6.1 m) PER 1 (25) RESURFACING (NOTE "A")
10'-0" (3.0 m) PER 1 (25) RESURFACING (NOTE "B")

BASIS OF PAYMENT:

THE BUTT JOINT WILL BE PAID FOR AT THE CONTRACT UNIT PRICE PER SQUARE YARD (SQUARE METER) FOR "HOT-MIX ASPHALT SURFACE REMOVAL - BUTT JOINT" OR FOR "PORTLAND CEMENT CONCRETE SURFACE REMOVAL- BUTT JOINT".

ALL DIMENSIONS ARE IN INCHES (MILLIMETERS) UNLESS OTHERWISE SHOWN.

FILE NAME = W:\diststd\22x34\bd32.dgn	USER NAME = gaglianobt	DESIGNED - M. DE YONG	REVISED - R. SHAH 10-25-94
		DRAWN -	REVISED - A. ABBAS 03-21-97
	PLOT SCALE = 50.0000 ' / IN.	CHECKED -	REVISED - M. GOMEZ 04-06-01
	PLOT DATE = 1/4/2008	DATE - 06-13-90	REVISED - R. BORO 01-01-07

STATE OF ILLINOIS
DEPARTMENT OF TRANSPORTATION

BUTT JOINT AND HMA TAPER DETAILS

SCALE: NONE | SHEET NO. 1 OF 1 SHEETS | STA. | TO STA.

F.A.U. RTE.	SECTION	COUNTY	TOTAL SHEETS	SHEET NO.
187	11-00121-11-BR	LAKE	496	315
	BD400-05 BD32	CONTRACT NO. 61A63		
FED. ROAD DIST. NO. 1	ILLINOIS	FED. AID PROJECT		

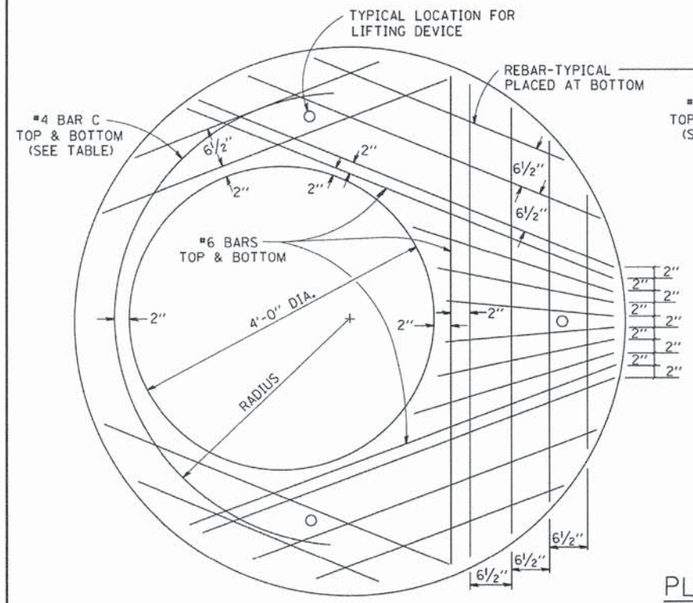

PLAN

SHOWING REBAR REINFORCEMENT

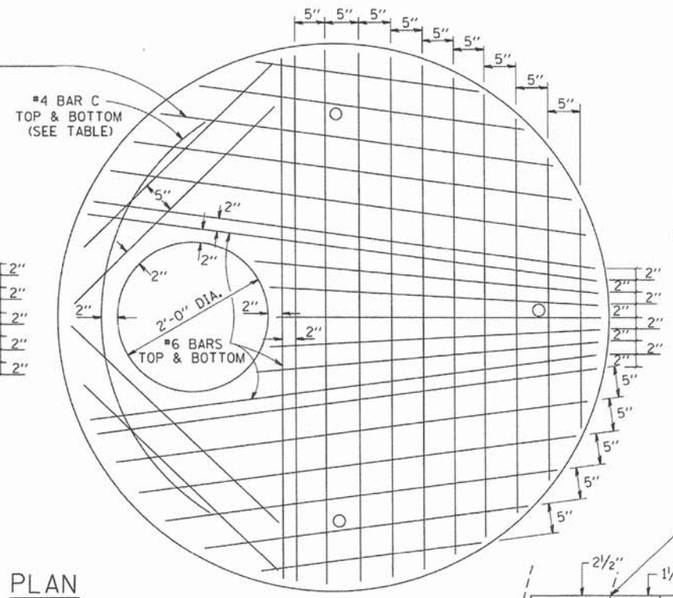

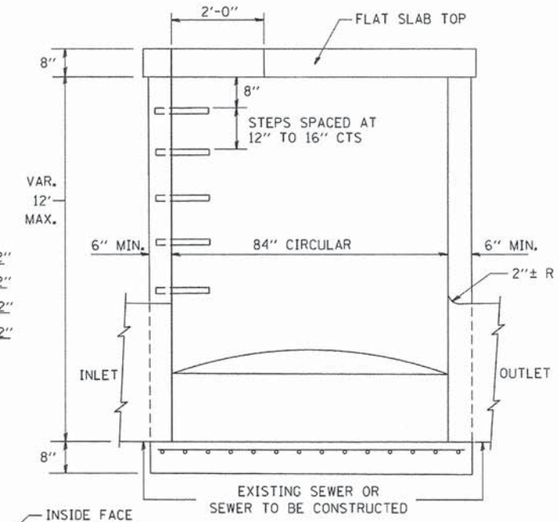

ELEVATION

GENERAL NOTES

ALTERNATE MATERIAL FOR THE WALLS MAY BE CONCRETE MASONRY UNITS, PRECAST REINFORCED CONCRETE SECTIONS OR CAST-IN-PLACE CONCRETE. THE CAST IRON STEPS AS DETAILED HEREON ARE TYPICAL. STEPS OF OTHER DESIGN AND MATERIAL THAT CONFORM TO THE MINIMUM REQUIREMENTS OF THE STEPS SHOWN MAY BE USED WHEN APPROVED BY THE ENGINEER.

CAST IRON STEPS SHALL BE GRAY IRON CONFORMING TO THE REQUIREMENTS OF ARTICLE 1006.14 OF THE STANDARD SPECIFICATIONS.

STEPS SHALL BE EMBEDDED INTO THE WALL A MINIMUM OF THREE (3) INCHES. STEPS SHALL NOT BE EXTENDED ON THE OUTSIDE.

STEPS SHALL BE OMITTED FOR WORK IN COOK COUNTY WHEN THE DEPTH OF THE MANHOLE IS TEN (10') OR LESS.

IN ADDITION TO THE REQUIREMENTS OF ARTICLE 612.13 OF THE STANDARD SPECIFICATIONS, THE CONTRACT UNIT PRICE FOR MANHOLES, TYPE A, 7'-DIAMETER SHALL INCLUDE THE SAND CUSHION WHEN REQUIRED, FURNISHING AND INSTALLING STEPS WHEN REQUIRED, FURNISHING AND COMPACTING THE SPECIFIED BACKFILL MATERIAL, AND FURNISHING AND INSTALLING FLAT SLAB TOP.

PRECAST FLAT SLAB TOP SHALL CONFORM TO ARTICLES 505.01 THRU 505.05 OF THE STANDARD SPECIFICATIONS EXCEPT THAT THE CONCRETE STRENGTH SHALL BE 4,000 PSI AFTER 28 DAYS. REINFORCEMENT BARS AND WELDED WIRE FABRIC SHALL CONFORM TO THE REQUIREMENTS OF ARTICLE 1006.10. ONLY GRADE 60 REINFORCEMENT BARS WILL BE PERMITTED.

BOTTOM SLAB SHALL BE REINFORCED BY EITHER REINFORCEMENT BARS OR WELDED WIRE FABRIC. THE MINIMUM REINFORCEMENT SHALL BE 0.46 SQUARE INCH PER LINEAR FOOT IN BOTH DIRECTIONS.

JOINT CONFIGURATION AND DIMENSIONS OF FLAT SLAB TOP SHALL MATCH AND FIT THE RISER JOINT DETAIL.

LIFTING DEVICES SHALL BE APPROVED BY THE ENGINEER.

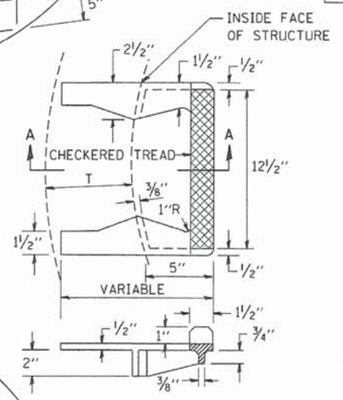

SEC. A-A

CAST IRON STEPS

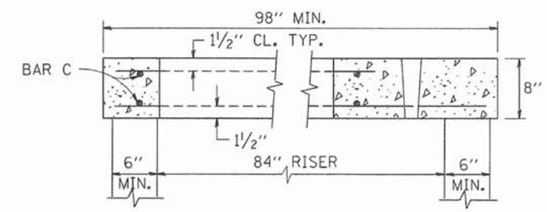

SECTION B-B

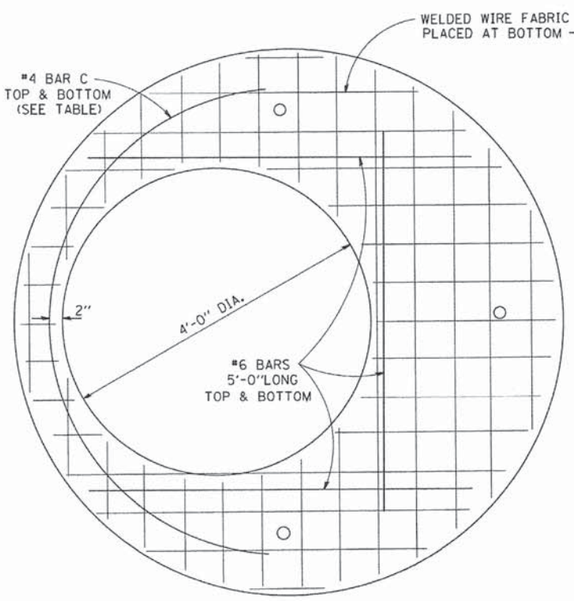

PLAN

SHOWING WELDED WIRE FABRIC REINFORCEMENT

NOTE: THIS STRUCTURE SHOULD BE USED WITH PIPES SIZE 54" DIA. OR SMALLER.

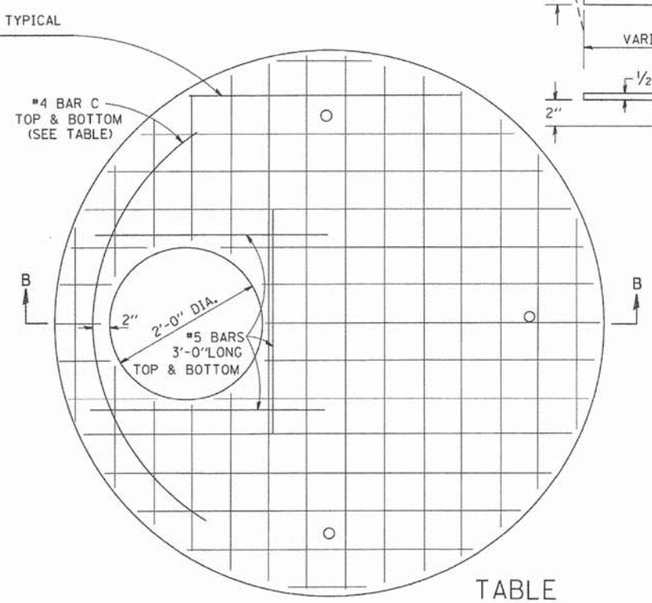

TABLE

DIAMETER OF OPENING	REINFORCEMENT "As" WWF OR EACH DIRECTION	BAR SIZE	BAR C		
			SIZE	LENGTH	RADIUS
2'-0"	1.06 SQ.IN./LIN.FT.	#6	#4	6'-0"	38"
4'-0"	0.82 SQ.IN./LIN.FT.	#6	#4	9'-0"	38"

ALTERNATE MATERIALS FOR RISERS	T (MIN.)
CONCRETE MASONRY UNITS	5"
PRECAST REINFORCED CONCRETE SECTIONS	4"
CAST-IN-PLACE CONCRETE	6"

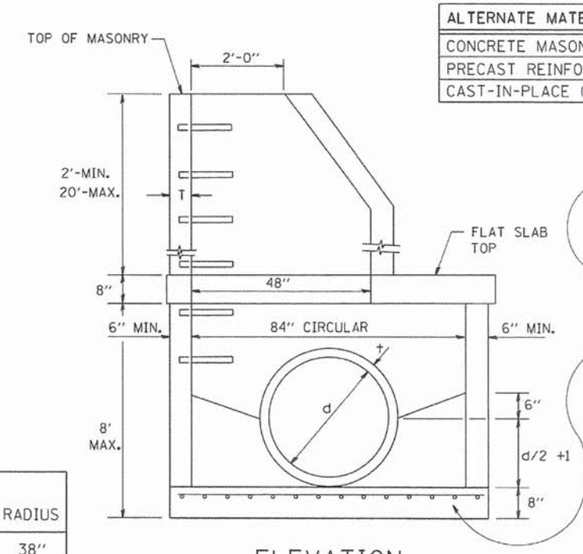

ELEVATION

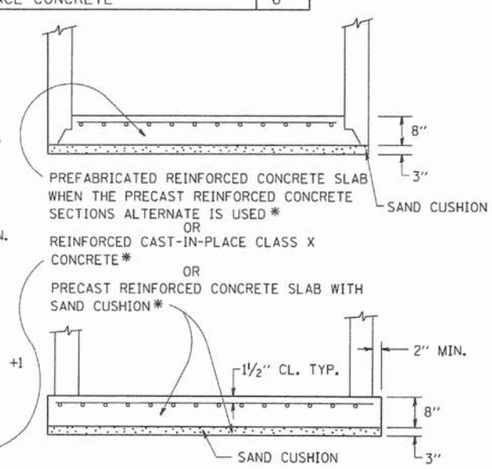

FILE NAME = W:\diststd\22x34\bd37.dgn	USER NAME = gaglianobt	DESIGNED -	REVISED -
		DRAWN -	REVISED -
	PLOT SCALE = 50.0000 ' / IN.	CHECKED -	REVISED -
	PLOT DATE = 1/4/2008	DATE - 10-18-02	REVISED -

STATE OF ILLINOIS
DEPARTMENT OF TRANSPORTATION

MANHOLE TYPE A
7 FOOT DIAMETER

SCALE: NONE | SHEET NO. 1 OF 1 SHEETS | STA. | TO STA.

F.A.U. RTE.	SECTION	COUNTY	TOTAL SHEETS	SHEET NO.
187	11-00121-11-BR	LAKE	496	316
	BD600-11 (BD-37)	CONTRACT NO. 61A63		
FED. ROAD DIST. NO. 1	ILLINOIS	FED. AID PROJECT		

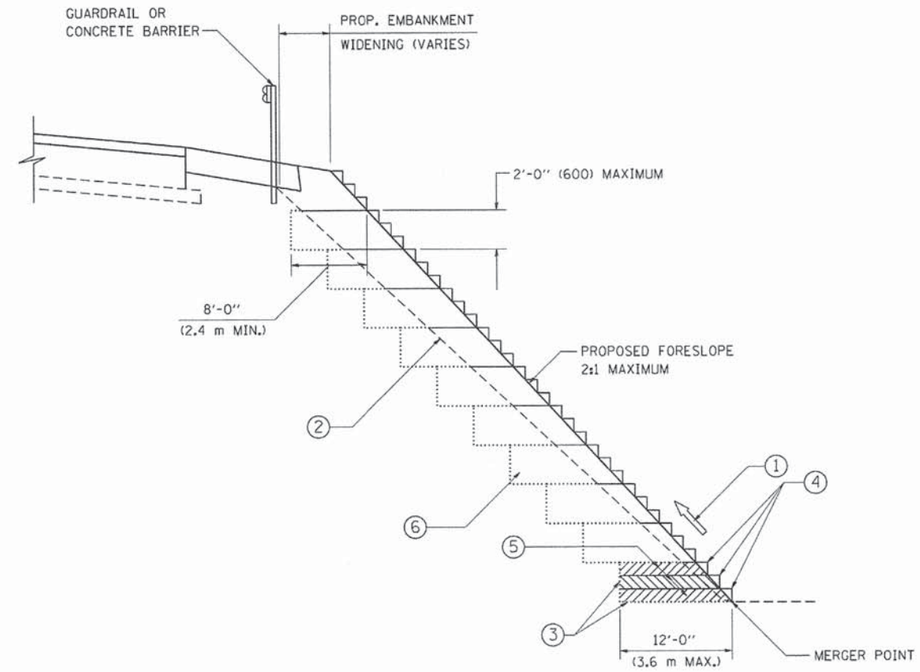

TYPICAL BENCHING DETAIL FOR EMBANKMENT

NOTES:

1. CONSTRUCT SUCCEEDING BENCH CUTS AND EMBANKMENT PLACEMENT AND COMPACTION FROM BOTTOM TO TOP IN STAIRSTEP FASHION.
2. EXISTING FORESLOPE PREPARED IN ACCORDANCE WITH ARTICLE 205.03 OF THE STANDARD SPECIFICATIONS.
3. BENCH CUT EXISTING SLOPE TYPICAL FOR EACH STEP.
4. TRIM TO FINAL SLOPE.
5. EQUAL 8-INCH (200) LIFTS OF EMBANKMENT COMPACTED IN ACCORDANCE WITH ARTICLE 205.05 OF THE STANDARD SPECIFICATIONS.
6. EXCAVATION OF BENCH CUTS WITHIN EXISTING EMBANKMENT WILL BE PAID FOR AT THE CONTRACT UNIT PRICE PER CUBIC METER OR CUBIC YARD FOR "EARTH EXCAVATION". THIS PRICE WILL INCLUDE ALL LABOR AND MATERIAL. NO ADDITIONAL COMPENSATION WILL BE ALLOWED.
7. SLOPES SHALL BE BENCHED ACCORDING TO THIS DETAIL WHEN THE SLOPE IS STEEPER THAN 4:1 AND THE HEIGHT IS GREATER THAN 5' (1.5 m).

ALL DIMENSIONS ARE IN INCHES (MILLIMETERS) UNLESS OTHERWISE SHOWN.

FILE NAME = W:\diststd\22x34\bd51.dgn	USER NAME = gaglianobt	DESIGNED -	REVISED -	STATE OF ILLINOIS DEPARTMENT OF TRANSPORTATION	BENCHING DETAIL FOR EMBANKMENT WIDENING	F.A.U. RTE.	SECTION	COUNTY	TOTAL SHEETS	SHEET NO.
		DRAWN - CADD	REVISED -			187	11-00121-11-BR	LAKE	496	317
	PLOT SCALE = 50.0000 ' / IN.	CHECKED - S.E.B.	REVISED -			BD-51		CONTRACT NO. 61A63		
	PLOT DATE = 1/4/2008	DATE - 06-16-04	REVISED -		SCALE: NONE / SHEET NO. 1 OF 1 SHEETS / STA. / TO STA.	FED. ROAD DIST. NO. 1	ILLINOIS	FED. AID PROJECT		

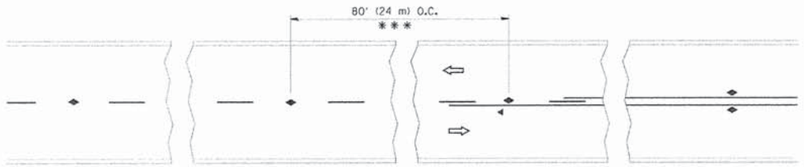

*** REDUCE TO 40' (12 m) O.C. ON CURVES WITH POSTED OR ADVISORY SPEED 45 M.P.H. (70 km/h) OR LESS.

TWO-LANE/TWO-WAY

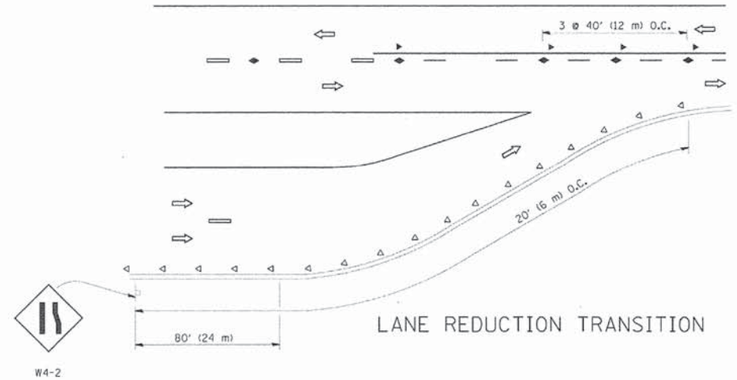

LANE REDUCTION TRANSITION

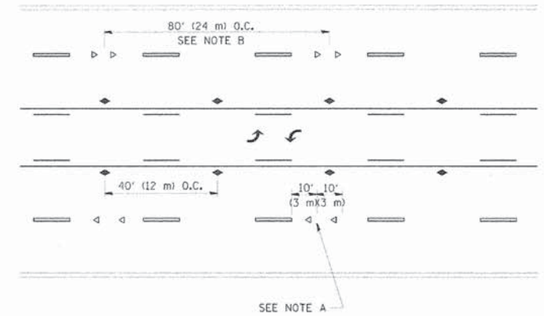

TWO-WAY LEFT TURN

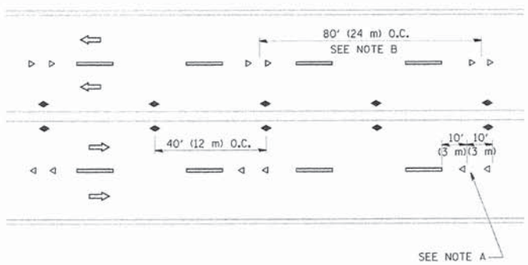

MULTI-LANE/UNDIVIDED

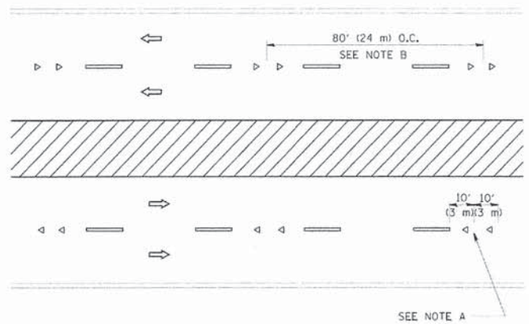

MULTI-LANE/DIVIDED

GENERAL NOTES

1. MARKERS USED WITH DASHED LINES SHALL BE CENTERED IN THE GAP BETWEEN SEGMENTS.
2. MARKERS USED ADJACENT TO SOLID LINES SHALL BE OFFSET 2 TO 3 (50 TO 75) TOWARD TRAFFIC AS SHOWN.
3. MARKERS THROUGH TANGENTS LESS THAN 500' (150 m) IN LENGTH BETWEEN CURVES SHALL BE INSTALLED AT THE LESSER OF THE TWO CURVE SPACINGS.

SYMBOLS

- YELLOW STRIPE
- WHITE STRIPE
- ONE-WAY AMBER MARKER
- ONE-WAY CRYSTAL MARKER (W/O)
- TWO-WAY AMBER MARKER

LANE MARKER NOTES

A. USE DOUBLE LANE LINE MARKERS SPACED AS SHOWN.

B. REDUCE TO 40' (12 m) O.C. ON CURVES WHERE ADVISORY SPEEDS ARE 10 M.P.H (20 km/h) LOWER THAN POSTED SPEEDS.

DESIGN NOTES

1. DOUBLE LANE LINE MARKERS SHALL BE USED UNLESS SPECIFIED OTHERWISE.
2. EXCEPT AS SHOWN ON THE LANE REDUCTION TRANSITION AND FREEWAY EXIT RAMP DETAIL, MARKERS ARE NOT TO BE SPECIFIED ON RIGHT EDGE LINES.
3. THE EXACT MARKER LIMITS, SPACING, AND COLOR SHALL BE INCLUDED IN THE PLANS WHEN STANDARD SPECIFICATIONS ARE NOT BEING USED.
4. MARKERS SHOULD NOT BE USED ALONGSIDE CURBS EXCEPT FOR EXTREMELY SHORT SECTIONS OF CURBS WHERE NOT MORE THAN TWO MARKERS WOULD BE INVOLVED.

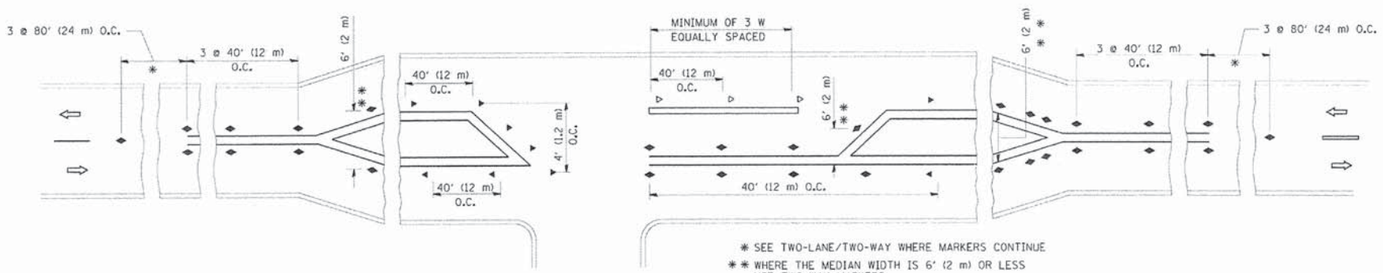

* SEE TWO-LANE/TWO-WAY WHERE MARKERS CONTINUE

** WHERE THE MEDIAN WIDTH IS 6' (2 m) OR LESS USE TWO-WAY MARKERS.

LEFT TURN

All dimensions are in inches (millimeters) unless otherwise shown.

FILE NAME = c:\pw_work\pwidot\leyna\d0108315\tc11.dgn	USER NAME = leyna	DESIGNED -	REVISED - T. RAMMACHER 09-19-94	STATE OF ILLINOIS DEPARTMENT OF TRANSPORTATION	TYPICAL APPLICATIONS RAISED REFLECTIVE PAVEMENT MARKERS (SNOW-PLOW RESISTANT)
		DRAWN -	REVISED - T. RAMMACHER 03-12-99		
	PLOT SCALE = 50.000 ' / IN.	CHECKED -	REVISED - T. RAMMACHER 01-06-00		
	PLOT DATE = 3/2/2011	DATE -	REVISED - C. JUCIUS 09-09-09		SCALE: NONE SHEET NO. 1 OF 1 SHEETS STA. TO STA.

F.A.U. RTE.	SECTION	COUNTY	TOTAL SHEETS	SHEET NO.
187	11-00121-11-BR	LAKE	496	318
	TC-11	CONTRACT NO. 61A63		
FED. ROAD DIST. NO. 1	ILLINOIS	FED. AID PROJECT		

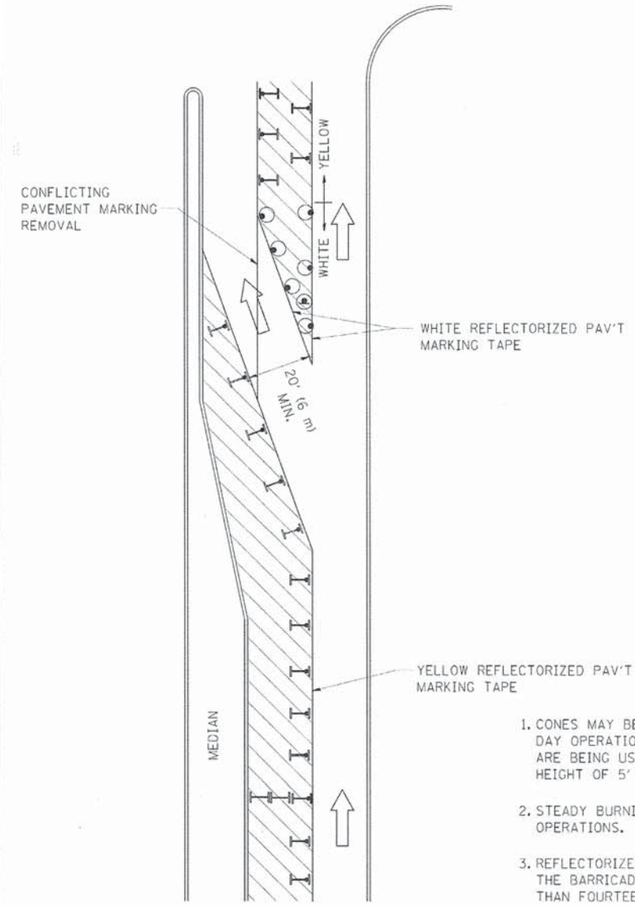

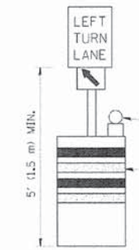

R 3-1100L 24 x 24 (600 x 600)

M6-2L 21 x 15 (530 x 380)

OPTIONAL FLASHING LIGHT

STANDARD 701901
SEE NOTE 8

GENERAL NOTES

1. CONES MAY BE SUBSTITUTED FOR BARRICADES OR DRUMS AT HALF THE SPACING DURING DAY OPERATIONS. CONES SHALL BE A MINIMUM OF 28 (710) IN HEIGHT. WHEN CONES ARE BEING USED, THE "LEFT TURN LANE" SIGN MAY BE SKID MOUNTED AT A MINIMUM HEIGHT OF 5' (1.5 m).
2. STEADY BURNING LIGHTS WILL NOT BE REQUIRED ON BARRICADES OR DRUMS FOR DAY OPERATIONS. ALL LIGHTS SHALL BE MONODIRECTIONAL.
3. REFLECTORIZED TEMPORARY PAVEMENT MARKING TAPE SHALL BE PLACED THROUGHOUT THE BARRICADED AREA OF EACH TURN BAY WHERE THE CLOSURE TIME IS GREATER THAN FOURTEEN DAYS.
4. THIS APPLICATION ALSO APPLIES WHEN WORK IS BEING PERFORMED IN THE RIGHT LANE(S) AND THE RIGHT TURN BAY IS TO REMAIN OPEN. UNDER THIS CONDITION, "RIGHT TURN LANE" R3-100 24 x 24 (600 x 600) AND M6-2R 21 x 15 (530 x 380) SHALL BE USED.
5. THESE CONTROLS SHALL SUPPLEMENT MAINLINE TRAFFIC CONTROL FOR LANE CLOSURES.
6. LONGITUDINAL DIMENSIONS MAY BE ADJUSTED TO FIT FIELD CONDITIONS.
7. FORM OPER 725 IS REQUIRED.
8. IF A DRUM OR TYPE II BARRICADE WITH AN ATTACHED SIGN PANEL WHICH MEETS NCHRP 350 REQUIREMENTS IS NOT AVAILABLE, THE SIGNS SHALL BE MOUNTED, ABOVE THE BARRICADES, ON SEPARATE SIGNS SUPPORTS THAT MEET NCHR 350 PREQUIREMENTS.
9. TRAFFIC CONTROL AND PROTECTION AT TURN BAYS (TO REMAIN OPEN TO TRAFFIC) SHALL BE INCLUDED IN THE COST SPECIFIED TRAFFIC CONTROL STANDARDS OR ITEMS.

LEGEND

WORK AREA

LANE OPEN TO TRAFFIC

TYPE I OR II BARRICADE WITH STEADY BURN LIGHT

DRUM WITH STEADY BURN LIGHT

DRUM WITH SIGN (WITH OPTIONAL FLASHING LIGHT) SEE DETAIL

TYPE I OR II CHECK BARRICADE WITH FLASHING LIGHT

All dimensions are in inches (millimeters) unless otherwise shown.

FILE NAME = c:\pw_work\PWIDOT\DRIVAKOSGN\d0108315\tc14.dgn	USER NAME = drivakosgn	REVISED - T. RAMMACHER 09-08-94	REVISED - R. BORO 09-14-09
		REVISED - A. HOUSEH 11-07-95	REVISED -
	PLOT SCALE = 49.9999 ' / IN.	REVISED - A. HOUSEH 10-12-96	REVISED -
	PLOT DATE = 9/14/2009	REVISED - T. RAMMACHER 01-06-00	REVISED -

STATE OF ILLINOIS
DEPARTMENT OF TRANSPORTATION

TRAFFIC CONTROL AND PROTECTION AT TURN BAYS
(TO REMAIN OPEN TO TRAFFIC)

SCALE: NONE | SHEET NO. 1 OF 1 SHEETS | STA. | TO STA.

F.A.U. RTE.	SECTION	COUNTY	TOTAL SHEETS	SHEET NO.
187	11-00121-11-BR	LAKE	496	319
	TC-14	CONTRACT NO. 61A63		
FED. ROAD DIST. NO. 1	ILLINOIS	FED. AID PROJECT		

ROUTE MARKERS

- 30 — FOR U.S. ROUTES M1-40-2424
- ILL 53 — FOR ILLINOIS ROUTES M1-50-2424
- MAIN STREET — R.R. UNMARKED ROUTES SPECIAL 24" x 18" VARIABLE 4" BLACK LETTERS ON WHITE REFLECTIVE BACKGROUND

ARROWS SIGNS

- M5-1L-2115
- M5-1R-2115
- M6-1-2115
- M6-1-2115
- M6-3-2115

CARDINAL DIRECTION & DETOUR SIGNS

- NORTH — M3-1-2412
- EAST — M3-2-2412
- SOUTH — M3-3-2412
- WEST — M3-4-2412
- DETOUR — M4-8-2412

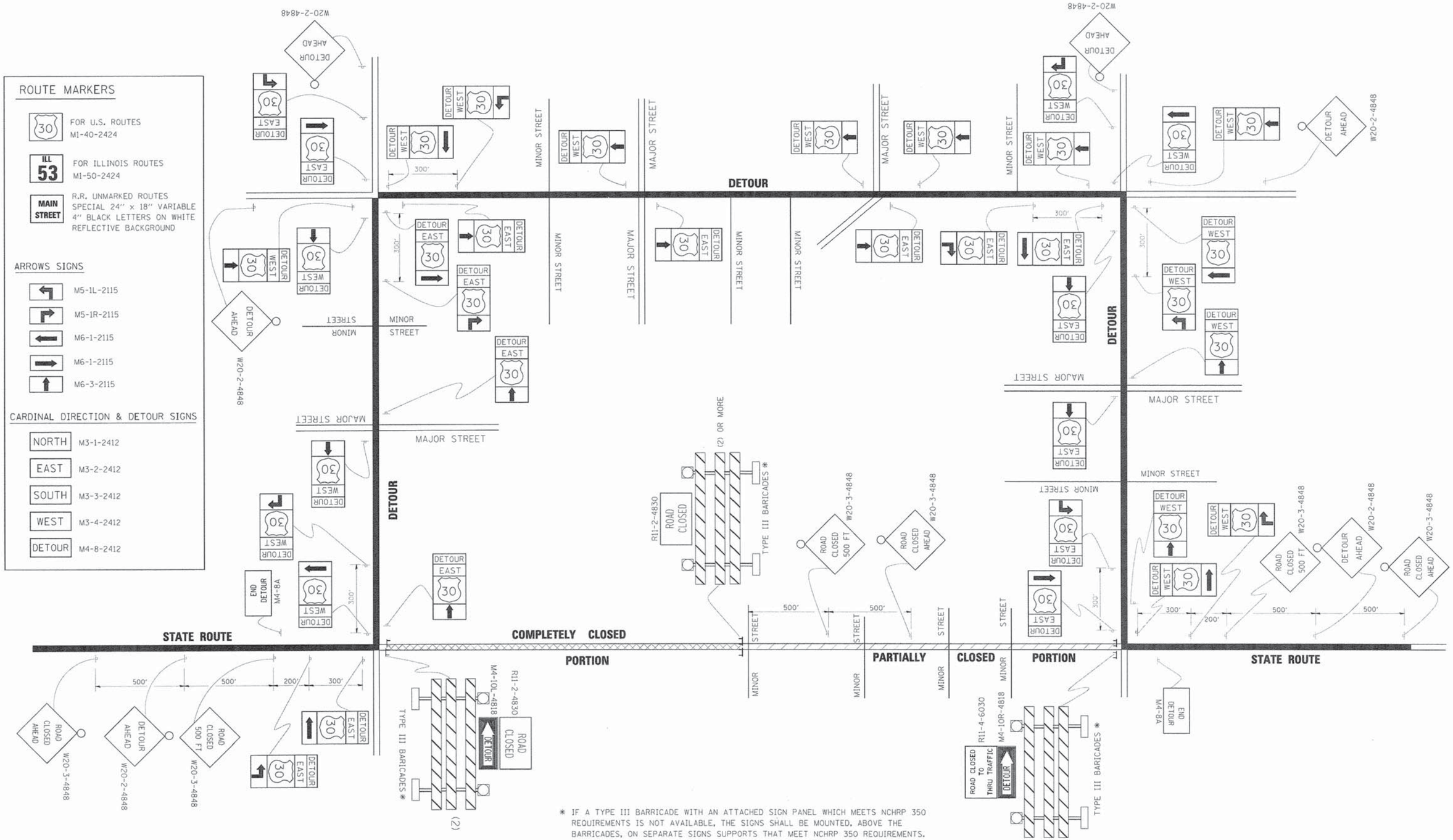

* IF A TYPE III BARRICADE WITH AN ATTACHED SIGN PANEL WHICH MEETS NCHRP 350 REQUIREMENTS IS NOT AVAILABLE, THE SIGNS SHALL BE MOUNTED, ABOVE THE BARRICADES, ON SEPARATE SIGNS SUPPORTS THAT MEET NCHRP 350 REQUIREMENTS.

FILE NAME =	USER NAME = drivakosgn	DESIGNED -	REVISED - 10-18-02	STATE OF ILLINOIS DEPARTMENT OF TRANSPORTATION	DETOUR SIGNING FOR CLOSING STATE HIGHWAYS
c:\pw_work\PWIDOT\DRIVAKOSGN\d0202315\tc21.dgn		DRAWN -	REVISED - R. BORO 09-14-09		
	PLOT SCALE = 49.9999 ' / IN.	CHECKED -	REVISED -		
	PLOT DATE = 9/14/2009	DATE -	REVISED -		SCALE: NONE · SHEET NO. 1 OF 1 SHEETS · STA. · TO STA.

F.A. RTE.	SECTION	COUNTY	TOTAL SHEETS	SHEET NO.
			496	320
	TC-21	CONTRACT NO.		
FED. ROAD DIST. NO. 1	ILLINOIS	FED. AID PROJECT		

ENGLISH		TRENCH WIDTH (W)		MIN OFFSET FROM E.O.P.* FOR NO TB		½ PIPE AREA [O.D.]
S.S. DIA.	T	WITHOUT SHORING	WITH SHORING	WITHOUT SHORING	WITH SHORING	
(IN)	(IN)	(FT)	(FT)	(FT)	(FT)	(SQ FT)
10	2.00	2.67	4.17	3.33	4.08	0.53
12	2.00	2.83	4.33	3.42	4.17	0.70
15	2.25	3.13	4.63	3.56	4.31	1.04
18	2.50	3.42	4.92	3.71	4.46	1.44
21	2.75	3.71	5.21	3.85	4.60	1.92
24	3.00	4.00	5.50	4.00	4.75	2.45
27	3.25	4.29	5.79	4.15	4.90	3.06
30	3.50	4.58	6.08	4.29	5.04	3.73
36	4.00	5.17	6.67	4.58	5.33	5.28
42	4.50	5.75	7.25	4.88	5.63	7.09
48	5.00	6.33	7.83	5.17	5.92	9.17

* TO CENTER LINE OF PIPE

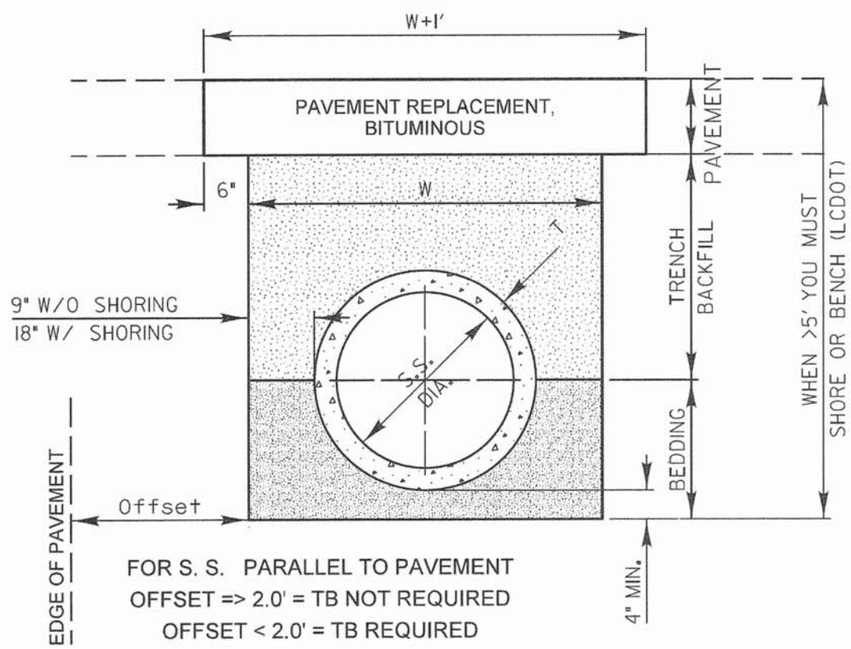

DESIGN NOTES:

1. Trench backfill is required if the storm sewer or culvert offset from the edge of the pavement is less than the tabulated values (the inner trench wall is closer than 2' to the edge of pavement)
2. Payment for the trench backfill shall not exceed the quantity computed using the maximum trench width dimensions. If the trench is excavated beyond these limits, the contractor shall furnish and place any additional trench backfill at his/her expense.
3. If the trench width is less than the above maximum values, payment will be based on the actual dimensions of the dug trench.
4. Bedding shall be placed from 4" under the pipe to the spring line of the pipe and is incidental to the corresponding storm sewer or culvert pay item.
5. If any part of the excavation for a drainage structure falls within 2' of the edge of pavement, the space between the side of the excavation and the outer surface of the drainage structure shall be filled with trench backfill. The cost of this item is included in the pay item for the drainage structure.

SCALE: 1" = 2'

REVISIONS	DATE
Text Revision	11/06/07
Text Update	7/14/11

LakeCounty Division of Transportation

APPROVED BY: M. G. ZEMAITIS
DATE: APRIL 1, 2007

TRENCH WIDTHS FOR TRENCH BACKFILL & PAVEMENT REPLACEMENT, BITUMINOUS

LC0020

PENTABLE = w:\Lisle\PenTable\TransPen.tbl

PATRICK ENGINEERING INC.
4970 VARSITY DRIVE
LISLE, IL 60532
patrickengineering.com
PATRICK ENGINEERING

USER NAME = tkoeppen(Rdwy_Lisle)	DESIGNED -	REVISED -
PLOT CONFIG= pdfNOLAYERSbw.pltcfg	DRAWN -	REVISED -
PLOT SCALE = 1:100	CHECKED -	REVISED -
PLOT DATE = 7/2/2014 11:46:38 PM	DATE - 6/30/2014	REVISED -

STATE OF ILLINOIS
DEPARTMENT OF TRANSPORTATION

WASHINGTON STREET FROM HARYAN WAY TO LAKE STREET
LAKE COUNTY DOT STANDARDS

SCALE: | SHEET NO. | STA. | TO STA.

F.A.U RTE.	SECTION	COUNTY	TOTAL SHEETS	SHEET NO.
187	11-00121-11-BR	LAKE	496	321
				61A63

FED. ROAD DIST. NO. | ILLINOIS | FED. AID PROJECT

G:\LCDOT\21150.004\Drawings\shts\Stds\S_STD_LCDOT_LC0020.dgn

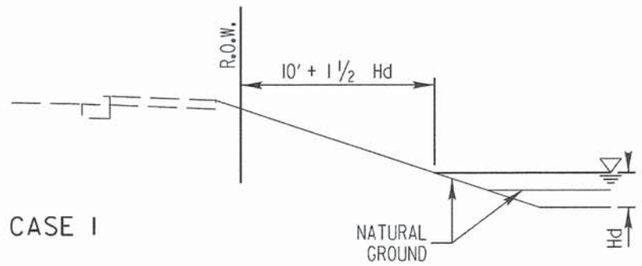

CASE I

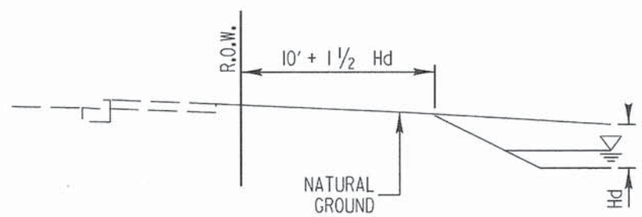

CASE II

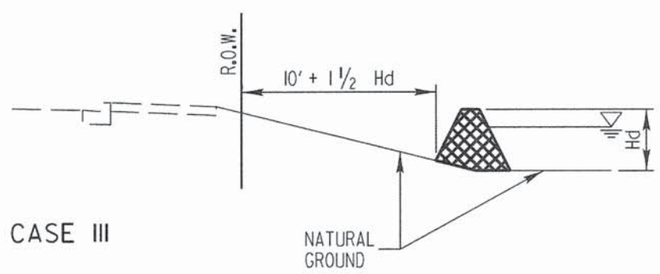

CASE III

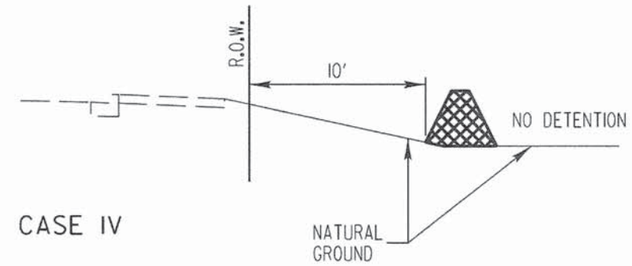

CASE IV

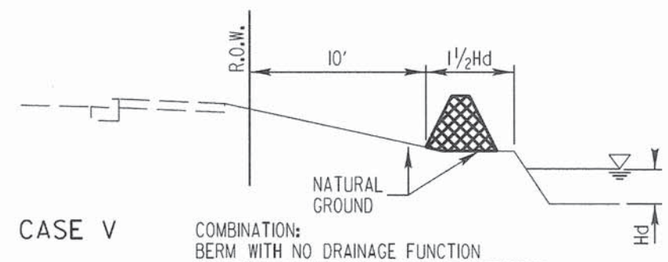

CASE V

COMBINATION:
BERM WITH NO DRAINAGE FUNCTION
ADJACENT TO EXCAVATION FOR DETENTION.
BOTH DISTANCE CRITERIA ARE TO BE APPLIED INDEPENDENTLY.

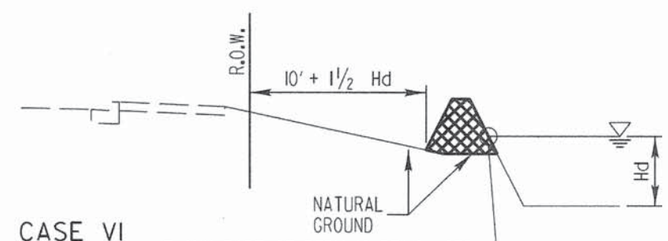

CASE VI

IF ANY PART OF BERM IS BEING USED
TO DETAIN WATER THEN Hd WOULD
BE TAKEN FROM BOTTOM OF BASIN
TO TOP OF BERM & 10 + 1 1/2Hd
APPLIED TO THE TOE OF THE BERM,
ADJACENT TO R.O.W.

REVISIONS	DATE

LakeCounty
Division of Transportation

APPROVED BY: M. G. ZEMAITIS
DATE: APRIL 1, 2007

DRAINAGE FACILITIES & EARTHEN BERM CONSTRUCTED ADJACENT TO HIGHWAY R.O.W.

LC0021

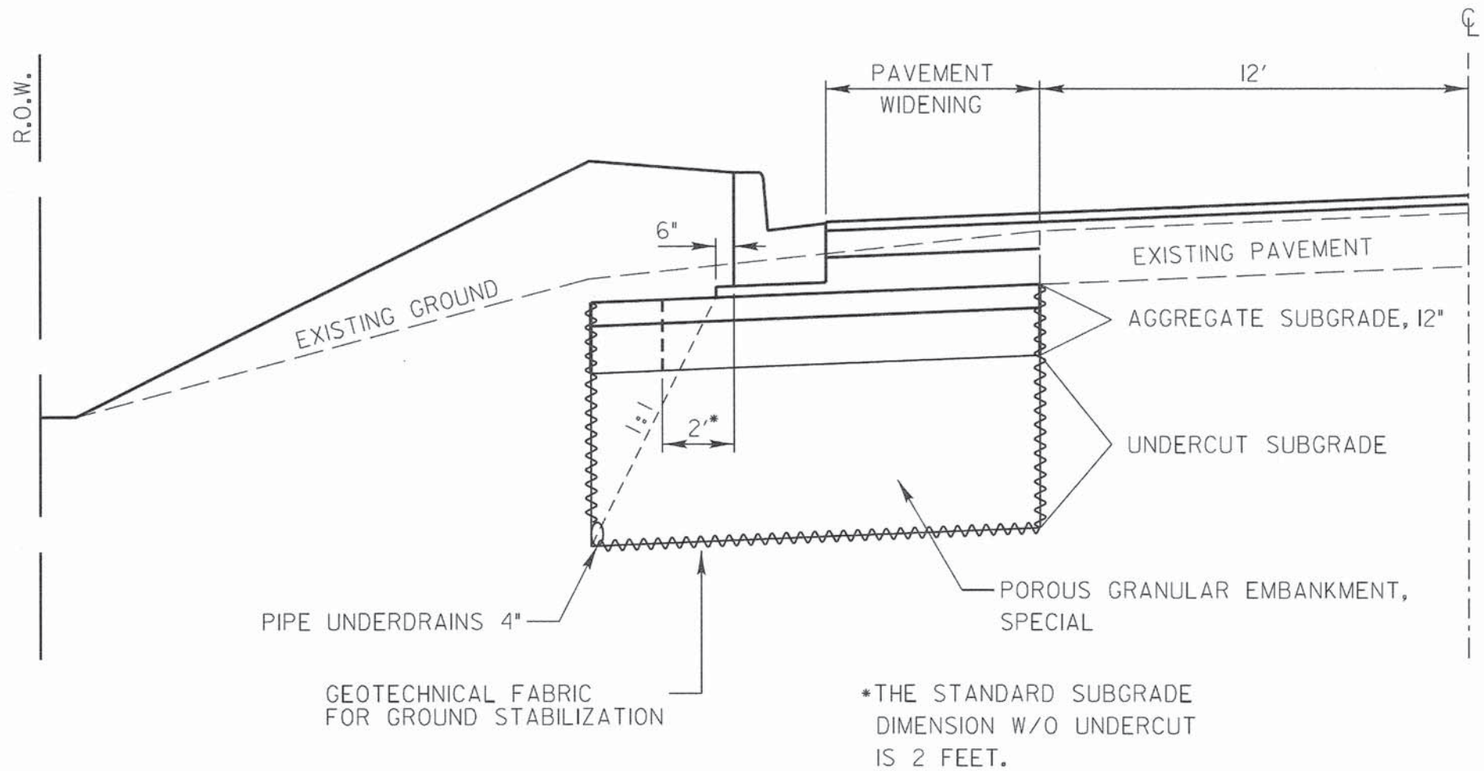

*THE STANDARD SUBGRADE DIMENSION W/O UNDERCUT IS 2 FEET.

IN UNSTABLE AREAS, THE SUBGRADE SHALL BE:
- UNDERCUT (PAID FOR AS EARTH EXCAVATION PER CU YD);
- REINFORCED WITH GEOTECHNICAL FABRIC FOR GROUND STABILIZATION (PAID FOR PER SQ YD);
- DRAINED BY INSTALLATION OF PIPE UNDERDRAINS, 4" (PAID FOR PER FOOT);
- BACKFILLED WITH POROUS GRANULAR EMBANKMENT, SPECIAL (PAID FOR PER TON) AND;
- TOPPED WITH AGGREGATE SUBGRADE, 12" (300mm) (PAID FOR PER SQ YD).

SCALE:
HORIZONTAL 1" = 5'
VERTICAL 1" = 2.5'

REVISIONS	DATE

LakeCounty Division of Transportation

APPROVED BY: M. G. Zemaitis
DATE: APRIL 1, 2007

UNDERCUT DETAIL

LC2000

PATRICK ENGINEERING INC.
4970 VARSITY DRIVE
LISLE, IL 60532
patrickengineering.com

USER NAME = tkoeppen(Rdwy.Lisle)	DESIGNED -	REVISED -
PLOT CONFIG= pdfNOLAYERSbw.pltcfg	DRAWN -	REVISED -
PLOT SCALE = 1:100	CHECKED -	REVISED -
PLOT DATE = 7/2/2014 11:47:21 PM	DATE - 6/30/2014	REVISED -

STATE OF ILLINOIS
DEPARTMENT OF TRANSPORTATION

WASHINGTON STREET FROM HARYAN WAY TO LAKE STREET
LAKE COUNTY DOT STANDARDS

SCALE: | SHEET NO. | STA. | TO STA.

F.A.U RTE.	SECTION	COUNTY	TOTAL SHEETS	SHEET NO.
187	11-00121-11-BR	LAKE	496	323

61A63

FED. ROAD DIST. NO. | ILLINOIS | FED. AID PROJECT

PENTABLE = ...\Lisle\PenTable\TransPen.tbl

D:\LCDOT\21150.004\Drawings\shts\Stds\S_STD_LCDOT_LC2000.dgn

PENTABLE = ...\Lisle\PenTable\TransPen.tbl

FOR BARE EARTH APPLICATION ONLY

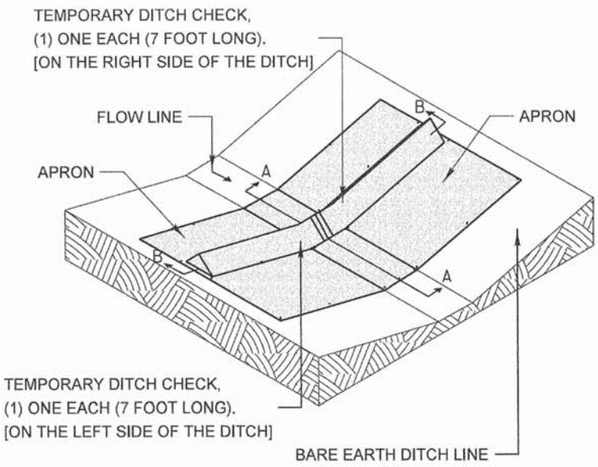

SILT DIKE UNIT ISOMETRIC

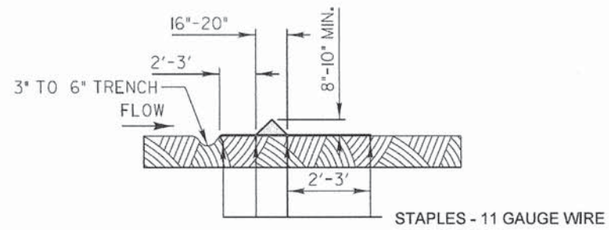

SECTION A-A

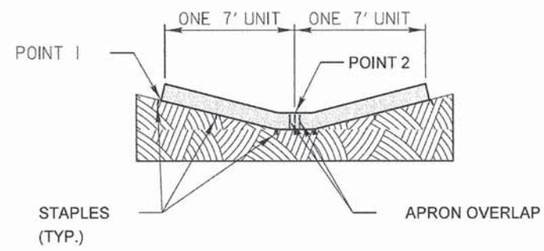

SECTION B-B

NOTES:

THE TEMPORARY DITCH CHECK SHALL BE USED IN BARE EARTH DITCH LINES AND SHALL BE REMOVED JUST PRIOR TO THE INSTALLATION OF EROSION CONTROL BLANKET AND SEEDING.

THE INSTALLATION SHOWN WILL BE MEASURED AND PAID FOR AS A TEMPORARY DITCH CHECK 14 FEET IN LENGTH.

STAPLES SHALL BE PLACED WHERE THE UNITS OVERLAP AND IN THE CENTER OF THE 7' UNIT AS SHOWN ON THE DIAGRAM.

POINT 1 MUST BE HIGHER THAN POINT 2 TO INSURE THAT WATER FLOWS OVER THE DIKE AND NOT AROUND THE ENDS.

REVISIONS	DATE
ADDED DIMENSIONS	04/11/08
REVISED PAY ITEM	04/15/10
ADDED PLASTIC BERM (pg2)	10/10/12

LakeCounty Division of Transportation

APPROVED BY: M. G. ZEMAITIS
DATE: APRIL 1, 2007

TEMPORARY DITCH CHECK INSTALLATION FOR ROADWAY OR DRAINAGE DITCH

(SHEET 1 OF 2)

LC2050

FOR USE WHILE ESTABLISHING FINAL LANDSCAPING

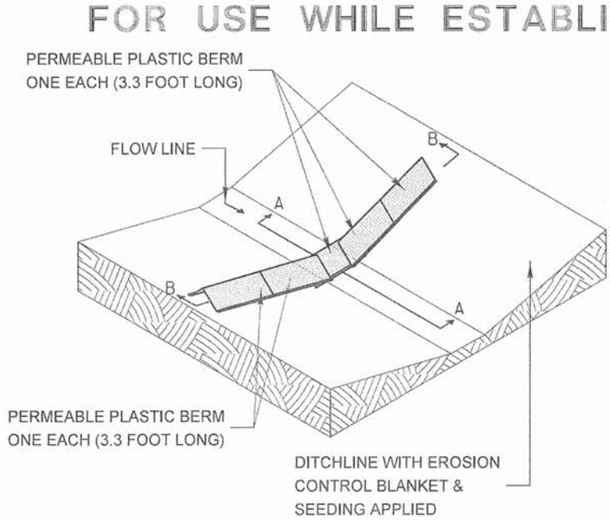

PERMEABLE PLASTIC BERM ISOMETRIC

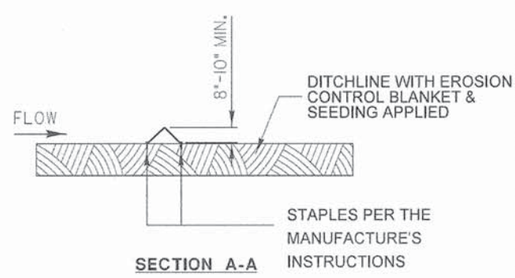

SECTION A-A

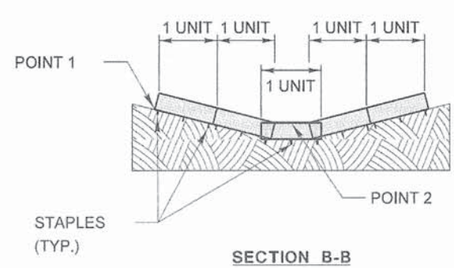

SECTION B-B

NOTES:

THE PERMEABLE PLASTIC BERM SHALL REPLACE THE TEMPORARY DITCH CHECK AFTER THE INSTALLATION OF EROSION CONTROL BLANKET AND SEEDING.

EACH PERMEABLE PLASTIC BERM IS 3.3 FEET IN LENGTH. THE MINIMUM INSTALLATION IN A DITCH SHALL BE THREE UNITS. THE INSTALLATION SHOWN WILL BE MEASURED AND PAID FOR AS A PERMEABLE PLASTIC BERM 16.5 FEET IN LENGTH (5 UNITS).

STAPLES SHALL BE PLACED WHERE THE UNITS OVERLAP AND ACCORDING TO THE MANUFACTURER'S INSTALLATION INSTRUCTIONS.

POINT 1 MUST BE HIGHER THAN POINT 2 TO INSURE THAT WATER FLOWS THROUGH OR OVER THE BERM AND NOT AROUND THE ENDS.

REVISIONS	DATE
ADDED DIMENSIONS	04/11/08
REVISED PAY ITEM	04/15/10
ADDED PLASTIC BERM (pg2)	10/10/12

LakeCounty Division of Transportation

APPROVED BY: M. G. ZEMAITIS
DATE: APRIL 1, 2007

TEMPORARY DITCH CHECK INSTALLATION FOR ROADWAY OR DRAINAGE DITCH

(SHEET 2 OF 2)

LC2050

PATRICK ENGINEERING INC.
4970 VARSITY DRIVE
LISLE, IL 60532
patrickengineering.com

USER NAME = skoeppen@dg_Lisle
PLOT CONFIG= pdfMOLAYERS=plt.cfg
PLOT SCALE = 1:80
PLOT DATE = 7/2/2014 1:47:40 PM

DESIGNED - | REVISED -
DRAWN - | REVISED -
CHECKED - | REVISED -
DATE - 6/30/2014 | REVISED -

STATE OF ILLINOIS
DEPARTMENT OF TRANSPORTATION

WASHINGTON STREET FROM HARVAN WAY TO LAKE STREET
LAKE COUNTY DOT STANDARDS

SCALE: | SHEET NO. | STA. | TO STA.

F.A.U. RTE.	SECTION	COUNTY	TOTAL SHEETS	SHEET NO.
187	11-00121-11-BR	LAKE	496	324

FED. ROAD DIST. NO. | ILLINOIS | FED. AID PROJECT

61A63

D:\LCDOT\21198.00\Drawings\sht\Stds\SS.STD.LCDOT.LC2050.dgn

1. SET POSTS AND EXCAVATE OR SLIT-TRENCH A 6-INCH DEEP TRENCH UPSLOPE ALONG THE LINE OF POSTS

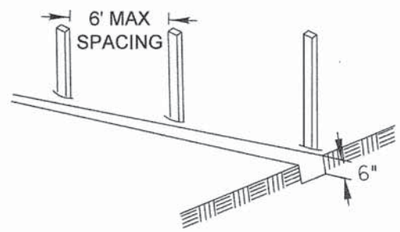

2. ATTACH GEOTEXTILE FILTER FABRIC TO EACH POST WITH A MINIMUM OF 3 (THREE) FASTENERS PER POST AND EXTEND FABRIC TO THE BOTTOM OF THE TRENCH

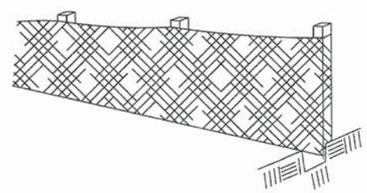

3. BACKFILL AND COMPACT THE EXCAVATED MATERIALS

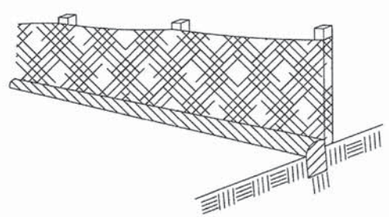

Requirements	Test Methods	Wire Backed Supported Silt Fence [a]	Unsupported Silt Fence	
			Geotextile Elongation >=50% [b]	Geotextile Elongation <50% [b]
Maximum Post Spacing		4 feet	4 feet	6 feet
Grab Strength	ASTM D 4632			
Machine direction		90 lbs	124 lbs	124 lbs
X-Machine direction		90 lbs	100 lbs	100lbs
Permittivity [c]	ASTM D 4491	0.05 sec^{-1}	0.05 sec^{-1}	0.05 sec^{-1}
Apparent Opening Size	ASTM D 4751	0.024in maximum average roll value		
Ultraviolet stability (retained strength)	ASTM D 4355	70% after 500 hours of exposure		

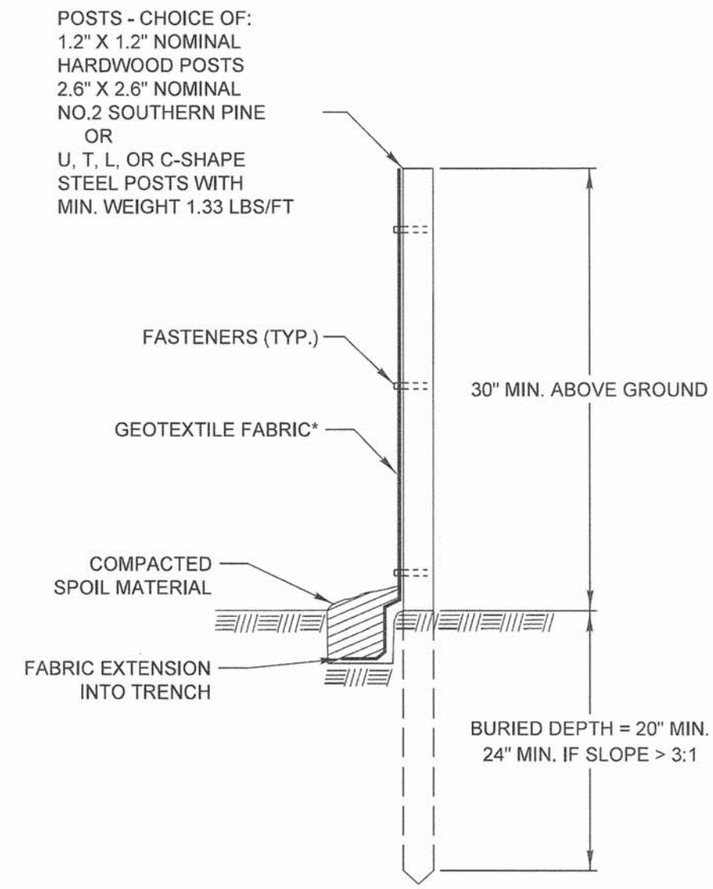

* NOTE: OPTIONAL WIRE SUPPORT
- MIN. 30" HEIGHT
- MIN. 14 GAUGE WIRE
- MIN. 6 HORIZ. WIRES
- MIN. 6" VERTICAL SPACING

SCALE 1" = 1'

REVISIONS	DATE
ORIG. by LCSMC	4/21/08
Update Text	7/15/11

LakeCounty
Division of Transportation

APPROVED BY: M. G. ZEMAITIS
DATE: JUNE 20, 2008

PERIMETER EROSION BARRIER INSTALLATION

LC2051

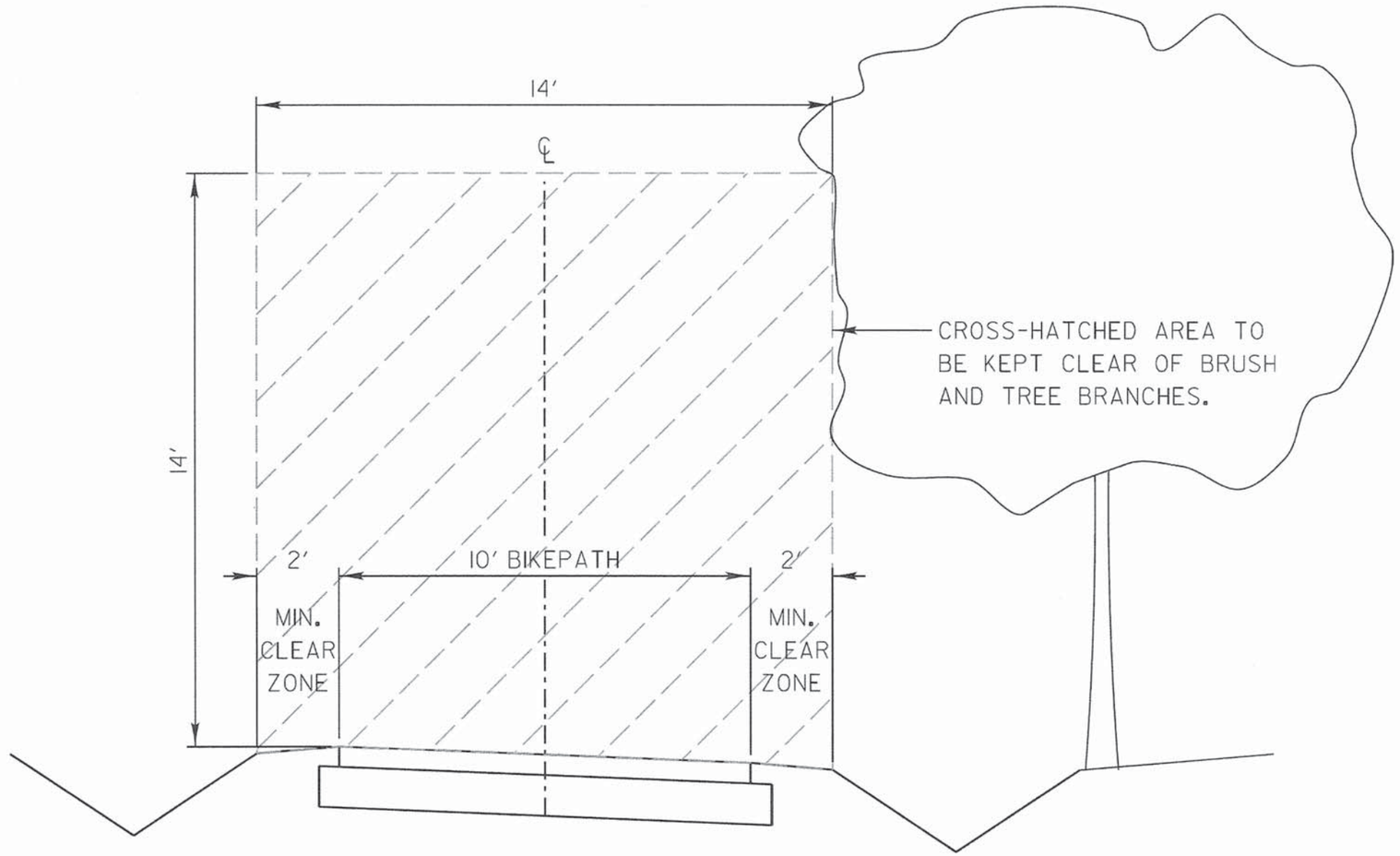

SCALE:
VERTICAL 1" = 2'
HORIZONTAL 1" = 4'

REVISIONS	DATE

LakeCounty Division of Transportation

APPROVED BY: M. G. ZEMAITIS
DATE: 04/10/13

VEGETATION MAINTENANCE REQUIRED CLEARANCE FOR 10' BIKEPATH

LC2200

PATRICK ENGINEERING INC.
4970 VARSITY DRIVE
LISLE, IL 60532
patrickengineering.com

USER NAME = tkoeppen(Rdwy.Lisle)	DESIGNED -	REVISED -
PLOT CONFIG= pdfNOLAYERSbw.pltcfg	DRAWN -	REVISED -
PLOT SCALE = 1:100	CHECKED -	REVISED -
PLOT DATE = 7/2/2014 11:48:21 PM	DATE - 6/30/2014	REVISED -

STATE OF ILLINOIS
DEPARTMENT OF TRANSPORTATION

WASHINGTON STREET FROM HARYAN WAY TO LAKE STREET
LAKE COUNTY DOT STANDARDS

SCALE: | SHEET NO. | STA. | TO STA.

F.A.U RTE.	SECTION	COUNTY	TOTAL SHEETS	SHEET NO.
187	11-00121-11-BR	LAKE	496	326
				61A63

FED. ROAD DIST. NO. | ILLINOIS | FED. AID PROJECT

PENTABLE = ...\Lisle\PenTable\TransPen.tbl

G:\LCDOT\21150.004\Drawings\shts\Stds\S_STD_LCDOT_LC2200.dgn

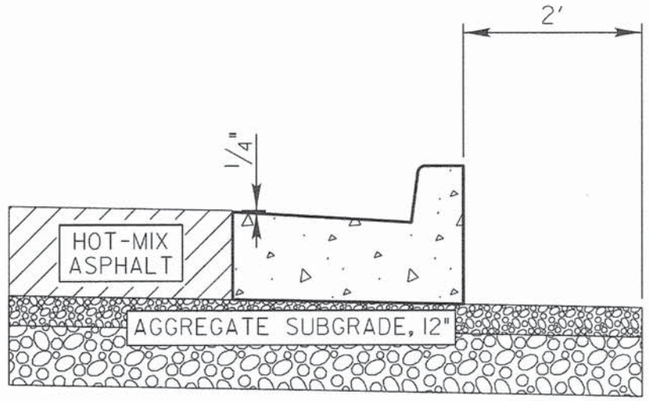

TYPICAL METHOD

NOTE:

MINIMUM FLAG THICKNESS 9"

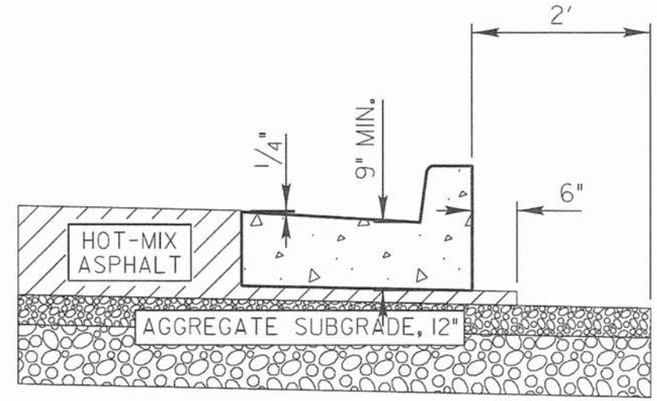

OPTIONAL METHOD

NOTE:
COST OF HOT-MIX ASPHALT MATERIAL UNDER CURB AND 6" OUTSIDE OF CURB TO BE INCIDENTAL TO COST OF COMBINATION CONCRETE CURB AND GUTTER.

SCALE: 1" = 2'

REVISIONS	DATE

LakeCounty
Division of Transportation

APPROVED BY: M. G. ZEMAITIS
DATE: APRIL 1, 2007

CURB & GUTTER SUBGRADE OPTIONS

LC3000

PATRICK ENGINEERING INC.
4970 VARSITY DRIVE
LISLE, IL 60532
patrickengineering.com

USER NAME = tkoeppen(Rdwy.Lisle)	DESIGNED -	REVISED -
PLOT CONFIG= pdfNOLAYERSbw.pltcfg	DRAWN -	REVISED -
PLOT SCALE = 1:100	CHECKED -	REVISED -
PLOT DATE = 7/2/2014 11:48:40 PM	DATE - 6/30/2014	REVISED -

STATE OF ILLINOIS
DEPARTMENT OF TRANSPORTATION

WASHINGTON STREET FROM HARYAN WAY TO LAKE STREET
LAKE COUNTY DOT STANDARDS

SCALE: | SHEET NO. | STA. | TO STA.

F.A.U RTE.	SECTION	COUNTY	TOTAL SHEETS	SHEET NO.
187	11-00121-11-BR	LAKE	496	327

61A63

FED. ROAD DIST. NO. | ILLINOIS | FED. AID PROJECT

PENTABLE = ...\Lisle\Pentable\TransPen.tbl

D:\LCDOT\21150.004\Drawings\shts\Stds\S_STD_LCDOT_LC3000.dgn

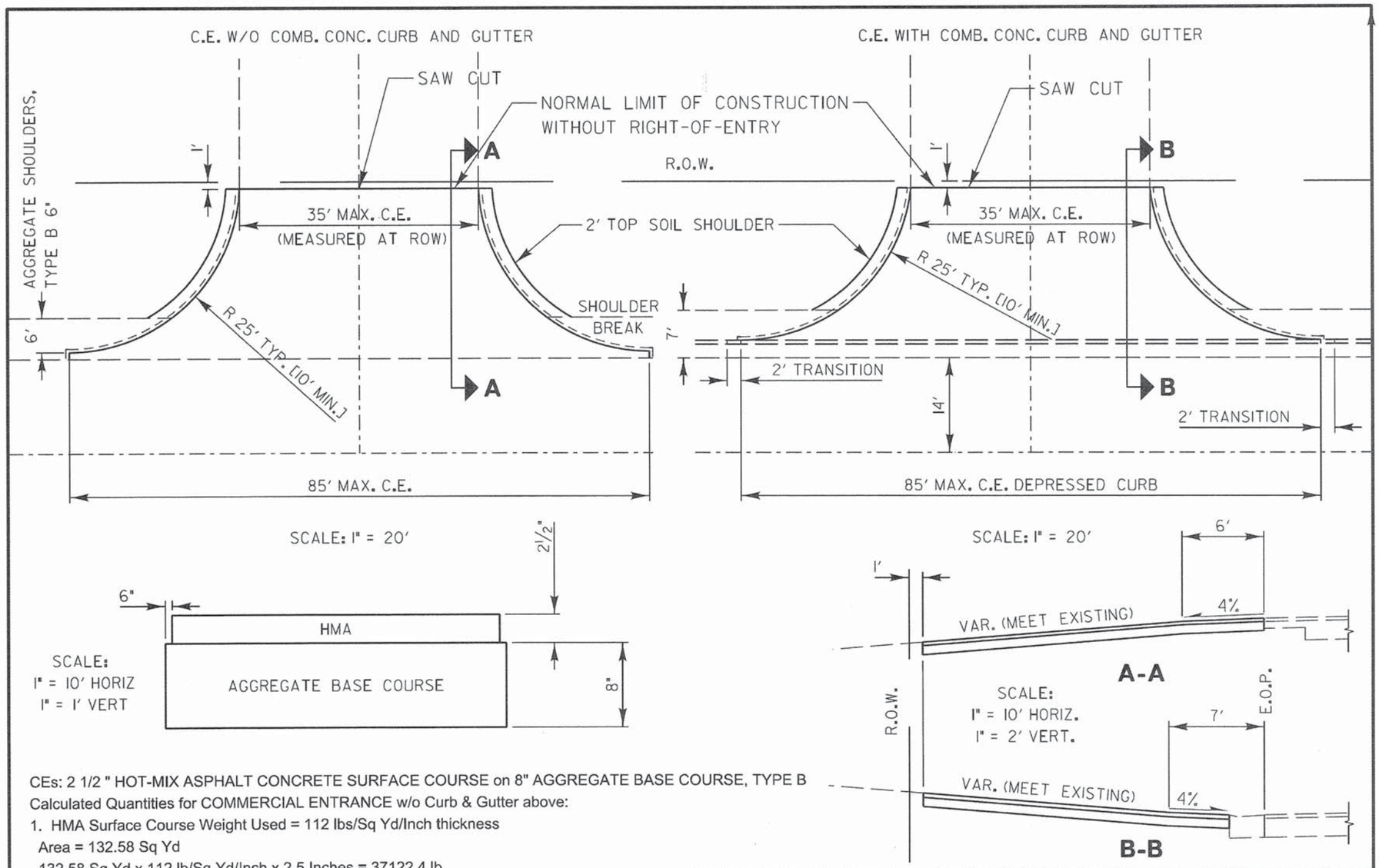

CEs: 2 1/2 " HOT-MIX ASPHALT CONCRETE SURFACE COURSE on 8" AGGREGATE BASE COURSE, TYPE B

Calculated Quantities for COMMERCIAL ENTRANCE w/o Curb & Gutter above:

1. HMA Surface Course Weight Used = 112 lbs/Sq Yd/Inch thickness
   Area = 132.58 Sq Yd
   132.58 Sq Yd x 112 lb/Sq Yd/Inch x 2.5 Inches = 37122.4 lb
   Converting to Tons = 37122.4 lb/2000 lb/Ton = 18.56 Ton
   Round to = **19 Ton**
2. Aggregate Base Course Weight Used = 2 Ton/Cu Yd
   136.94 Sq Yd x 2 Ton/Cu Yd x 0.22 Yd thickness = 60.25 Ton
   Round to = **60 TON**

REVISIONS	DATE
Removed Prime Coat Qty	5/20/08
Revised Type A to Type B Aggregate	12/20/12

LakeCounty Division of Transportation

APPROVED BY: M. G. ZEMAITIS
DATE: APRIL 1, 2007

TYPICAL MAJOR ACCESS (COMMERCIAL ENTRANCE)

LC4101

PATRICK ENGINEERING INC.
4970 VARSITY DRIVE
LISLE, IL 60532
patrickengineering.com

USER NAME = tkoeppen(Rdwy.Lisle)	DESIGNED -	REVISED -	
PLOT CONFIG= pdfNOLAYERSbw.pltcfg	DRAWN -	REVISED -	
PLOT SCALE = 1:100	CHECKED -	REVISED -	
PLOT DATE = 7/2/2014 11:48:59 PM	DATE - 6/30/2014	REVISED -	

STATE OF ILLINOIS
DEPARTMENT OF TRANSPORTATION

WASHINGTON STREET FROM HARYAN WAY TO LAKE STREET
LAKE COUNTY DOT STANDARDS

SCALE: | SHEET NO. | STA. | TO STA.

F.A.U RTE.	SECTION	COUNTY	TOTAL SHEETS	SHEET NO.
187	11-00121-11-BR	LAKE	496	328

61A63

FED. ROAD DIST. NO. | ILLINOIS | FED. AID PROJECT

PENTABLE = ...\Lisle\PenTables\TransPen.tbl

G:\LCDOT\21150.004\Drawings\shts\Stds\S_STD_LCDOT_LC4101.dgn

*GENERAL NOTES:

1. The gutter slope for the DEPRESSED CURB adjacent to the curb ramp is a maximum of 5% (standard curb and gutter is 6%). The back of curb rise is 1/2" (standard depressed curb is 1 1/2"). See Section A-A (Sheet 2) and IDOT standard 606001 for the different curb dimensions.
2. The Depressed Curb and the Transition Curb will be paid for as COMBINATION CONCRETE CURB AND GUTTER of the type adjacent to the curb ramp.
3. The concrete area consisting of the landing (2% slope) and the side ramps (behind the transition curb) along with the continuation of the 5' concrete between adjacent ramps (if any) will be measured in square feet and paid for as PORTLAND CEMENT CONCRETE SIDEWALK of the thickness specified.
4. The detectable warnings shall be installed in accordance with Article 424.09 of the IDOT Standard Specifications and the LCDOT specification 42400800 DETECTABLE WARNINGS and shall be measured and paid for per square foot.
5. Since the width of the flag doesn't affect the construction of the ramp, both B-6.12 and B-6.24 Curb & Gutter are portrayed in this standard.

REVISIONS	DATE
Added Warning Details	8/1/2009

LakeCounty Division of Transportation

APPROVED BY: M. G. ZEMAITIS
DATE: APRIL 1, 2007

CURB RAMPS with TRAFFIC SIGNAL POSTS & MAST ARMS
(SHEET 1 OF 2)

LC4201

REVISIONS	DATE
Added Warning Details	8/1/2009

LakeCounty Division of Transportation

APPROVED BY: M. G. ZEMAITIS
DATE: APRIL 1, 2007

CURB RAMPS with TRAFFIC SIGNAL POSTS & MAST ARMS
(SHEET 2 OF 2)

LC4201

PATRICK ENGINEERING INC.
4970 VARSITY DRIVE
LISLE, IL 60532
patrickengineering.com

USER NAME = tkoeppen(Rdwy_Lisle)	DESIGNED -	REVISED -	
PLOT CONFIG= pdfNOLAYERSbw.pltcfg	DRAWN -	REVISED -	
PLOT SCALE = 1:100	CHECKED -	REVISED -	
PLOT DATE = 7/2/2014 11:49:19 PM	DATE - 6/30/2014	REVISED -	

STATE OF ILLINOIS
DEPARTMENT OF TRANSPORTATION

WASHINGTON STREET FROM HARYAN WAY TO LAKE STREET
LAKE COUNTY DOT STANDARDS

SCALE: | SHEET NO. | STA. | TO STA.

F.A.U RTE.	SECTION	COUNTY	TOTAL SHEETS	SHEET NO.
187	11-00121-11-BR	LAKE	496	329
				61A63

FED. ROAD DIST. NO. | ILLINOIS | FED. AID PROJECT

PENTABLE = ...\Lisle\Pentable\TransPen.tbl

D:\LCDOT\21150.004\Drawings\shts\Stds\S_STD_LCDOT_LC4201.dgn

PENTABLE = ...\Lisle\PenTable\TransPen.tbl

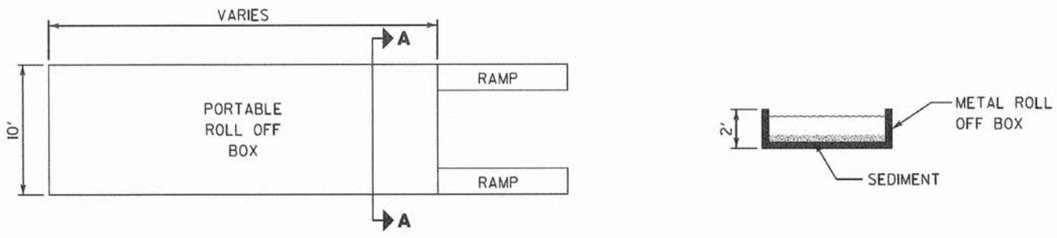

PLAN VIEW — **PREFAB PORTABLE WASHOUT** — SECTION A-A

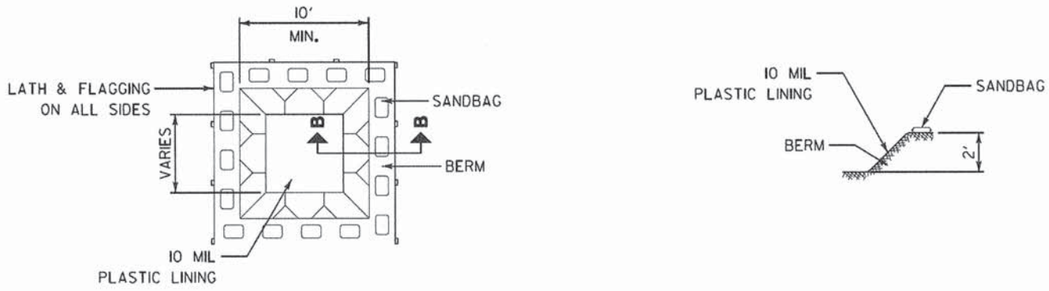

PLAN VIEW — **BELOW GRADE** — SECTION B-B

NOTES:

1. ACTUAL LAYOUT DETERMINED IN FIELD.
2. OTHER WASHOUT DESIGNS MAY BE USED IF APPROVED BY THE ENGINEER.
3. THE CONCRETE WASHOUT SIGN SHALL BE INSTALLED WITHIN 30 FEET OF THE TEMPORARY CONCRETE WASHOUT FACILITY.

NOT TO SCALE

REVISIONS	DATE

LakeCounty Division of Transportation

APPROVED BY: MGZ
DATE: March 17, 2008

CONCRETE WASHOUT FACILITIES
SHEET 1 OF 2

LC4202

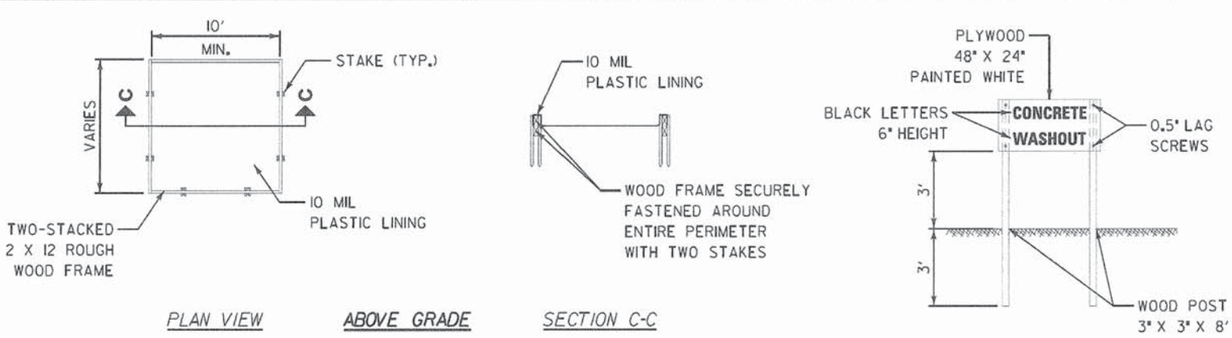

PLAN VIEW — **ABOVE GRADE** — SECTION C-C

CONCRETE WASHOUT SIGN DETAIL (OR EQUIVALENT)

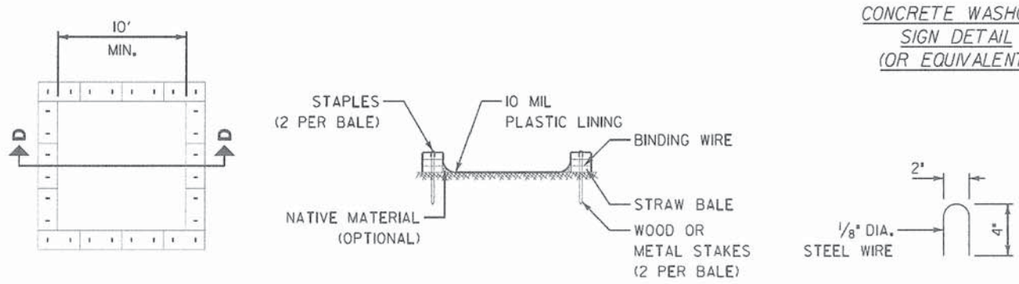

PLAN VIEW — **ABOVE GRADE WITH STRAW BALES** — SECTION D-D

STAPLE DETAIL

NOTES:

1. ACTUAL LAYOUT DETERMINED IN FIELD.
2. OTHER WASHOUT DESIGNS MAY BE USED IF APPROVED BY THE ENGINEER.
3. THE CONCRETE WASHOUT SIGN SHALL BE INSTALLED WITHIN 30 FEET OF THE TEMPORARY CONCRETE WASHOUT FACILITY.

NOT TO SCALE

REVISIONS	DATE

LakeCounty Division of Transportation

APPROVED BY: MGZ
DATE: March 17, 2008

CONCRETE WASHOUT FACILITIES
SHEET 2 OF 2

LC4202

PATRICK ENGINEERING
PATRICK ENGINEERING INC.
4970 VARSITY DRIVE
LISLE, IL 60532
patrickengineering.com

USER NAME = bkoeppen@dg-Lisle
PLOT CONFIG = pdf\NOLAYERS\w-plt.cfg
PLOT SCALE = 1:200
PLOT DATE = 7/2/2014 11:49:36 PM

DESIGNED	-	REVISED	-
DRAWN	-	REVISED	-
CHECKED	-	REVISED	-
DATE	- 6/30/2014	REVISED	-

STATE OF ILLINOIS
DEPARTMENT OF TRANSPORTATION

WASHINGTON STREET FROM HARVAN WAY TO LAKE STREET
LAKE COUNTY DOT STANDARDS

SCALE: SHEET NO. STA. TO STA.

F.A.U. RTE.	SECTION	COUNTY	TOTAL SHEETS	SHEET NO.
187	11-00121-11-BR	LAKE	496	330

FED. ROAD DIST. NO. ILLINOIS FED. AID PROJECT

61A63

D:\LCDOT\21158.2014\Drawings\sta\Stds\STD.LCDOT.LC4202.dgn

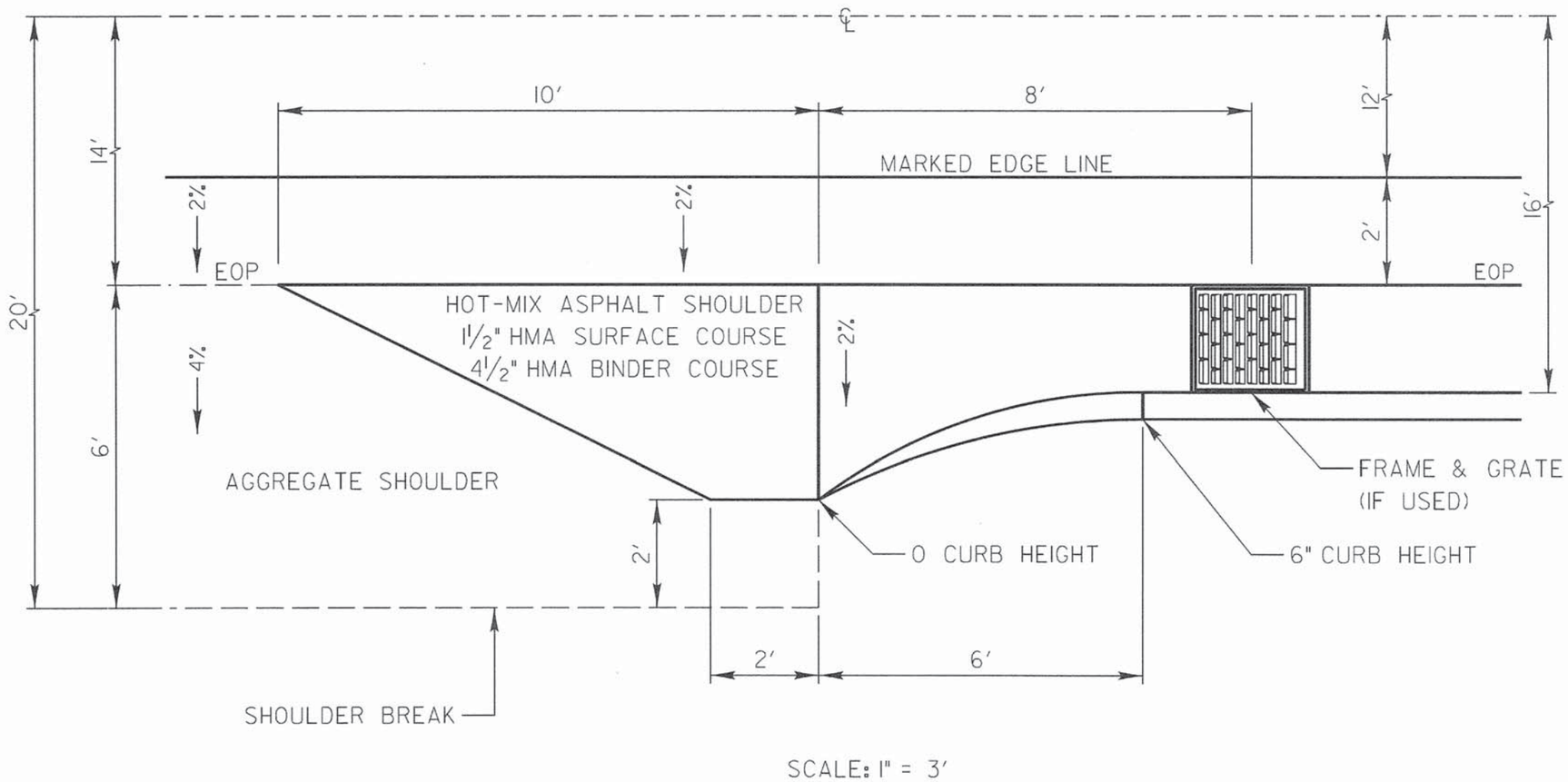

REVISIONS	DATE

LakeCounty
Division of Transportation

APPROVED BY: M. G. ZEMAITIS
DATE: APRIL 1, 2007

TRANSITION FROM AGGREGATE SHOULDER TO B-6.24 FOR 16' OFFSET TO FACE

LC4800

PENTABLE = ...\Lisle\PenTable\TransPen.tbl

PATRICK ENGINEERING
PATRICK ENGINEERING INC.
4970 VARSITY DRIVE
LISLE, IL 60532
patrickengineering.com

USER NAME = tkoeppen(Rdwy.Lisle)	DESIGNED -	REVISED -
PLOT CONFIG= pdfNOLAYERSbw.pltcfg	DRAWN -	REVISED -
PLOT SCALE = 1:100	CHECKED -	REVISED -
PLOT DATE = 7/2/2014 11:49:52 PM	DATE - 6/30/2014	REVISED -

STATE OF ILLINOIS
DEPARTMENT OF TRANSPORTATION

WASHINGTON STREET FROM HARYAN WAY TO LAKE STREET
LAKE COUNTY DOT STANDARDS

SCALE: | SHEET NO. | STA. | TO STA.

F.A.U RTE.	SECTION	COUNTY	TOTAL SHEETS	SHEET NO.
187	11-00121-11-BR	LAKE	496	331
				61A63

FED. ROAD DIST. NO. | ILLINOIS | FED. AID PROJECT

O:\LCDOT\21150.004\Drawings\shts\Stds\S_STD_LCDOT_LC4800.dgn

RECOMMENDED OFFSET FROM OPEN TRENCH TO FACE OF TREE	
TREE DIAMETER IN.	OFFSET - "X" FT.
0-2	1
3-4	2
5-9	5
10-14	10
15-19	12
OVER 19	15

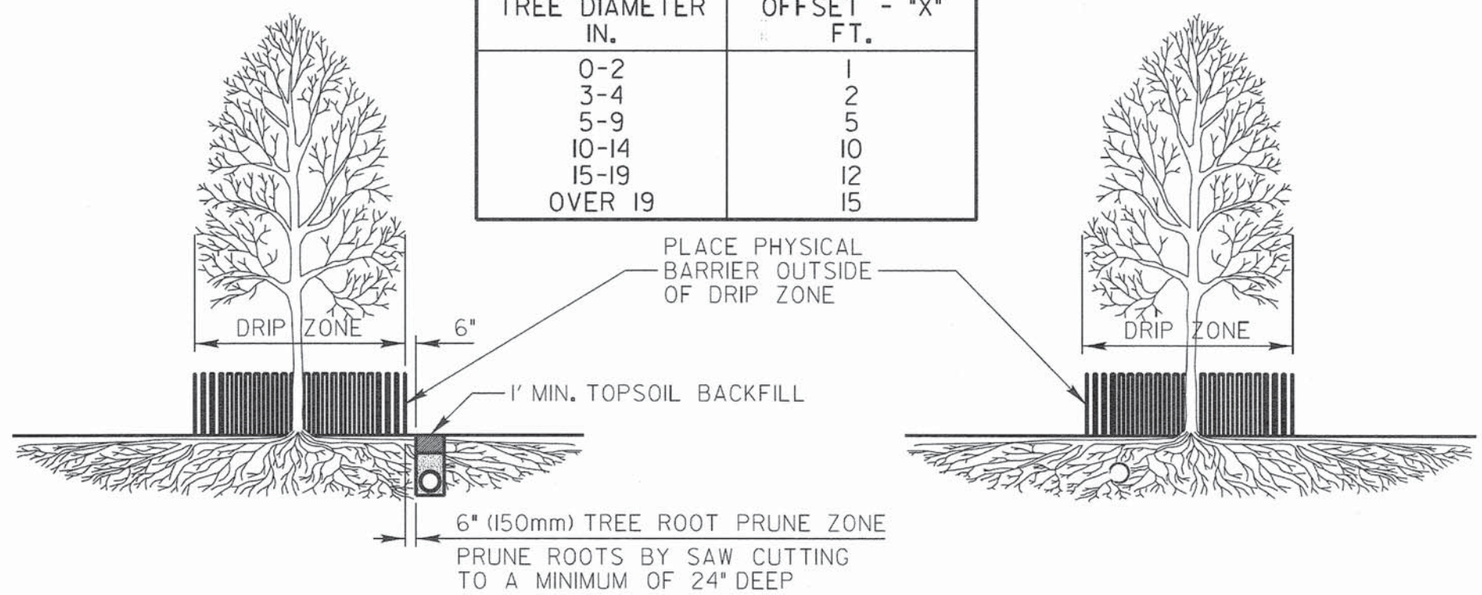

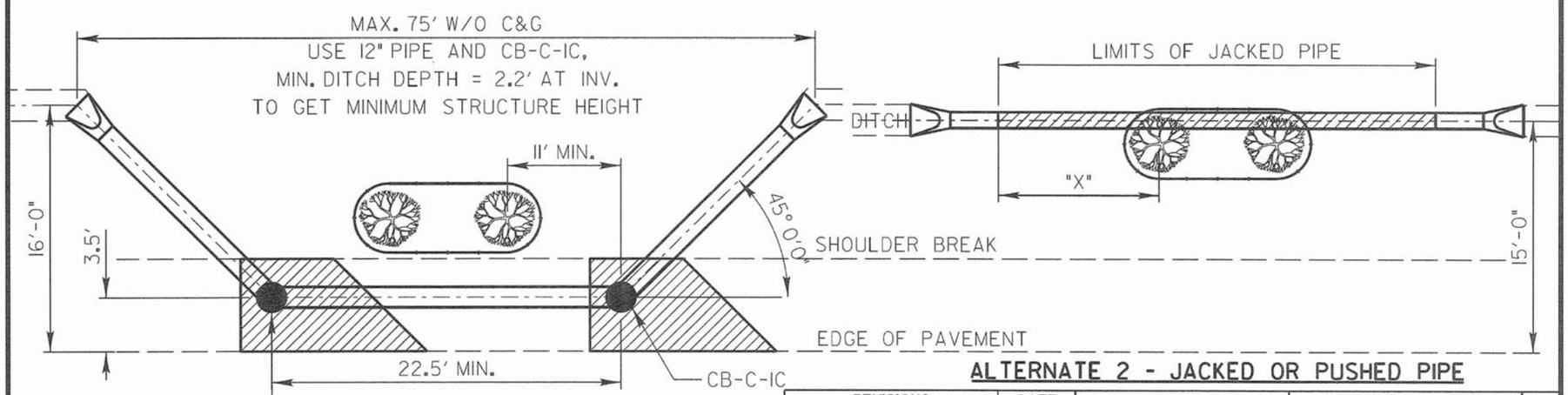

SEE ALSO LC4820 "HOT-MIX ASPHALT APRON FOR STRUCTURES IN AGGREGATE SHOULDERS."

ALTERNATE 1 - RELOCATED PIPE

ALTERNATE 2 - JACKED OR PUSHED PIPE

SCALE: 1" = 10'

REVISIONS	DATE

LakeCounty Division of Transportation

APPROVED BY: M. G. ZEMAITIS
DATE: APRIL 1, 2007

TREE PRESERVATION WITH STORM SEWER IN UNCURBED AREAS

LC5400

PENTABLE = ...\Lisle\PenTable\TransPen.tbl

PATRICK ENGINEERING INC.
4970 VARSITY DRIVE
LISLE, IL 60532
patrickengineering.com

USER NAME = tkoeppen(Rdwy_Lisle)	DESIGNED -	REVISED -
PLOT CONFIG= pdfNOLAYERSbw.pltcfg	DRAWN -	REVISED -
PLOT SCALE = 1:100	CHECKED -	REVISED -
PLOT DATE = 7/2/2014 11:50:12 PM	DATE - 6/30/2014	REVISED -

STATE OF ILLINOIS
DEPARTMENT OF TRANSPORTATION

WASHINGTON STREET FROM HARYAN WAY TO LAKE STREET
LAKE COUNTY DOT STANDARDS

SCALE: | SHEET NO. | STA. | TO STA.

F.A.U RTE.	SECTION	COUNTY	TOTAL SHEETS	SHEET NO.
187	11-00121-11-BR	LAKE	496	332
				61A63

FED. ROAD DIST. NO. | ILLINOIS | FED. AID PROJECT

D:\LCDOT\21150.004\Drawings\shts\Stds\S_STD_LCDOT_LC5400.dgn

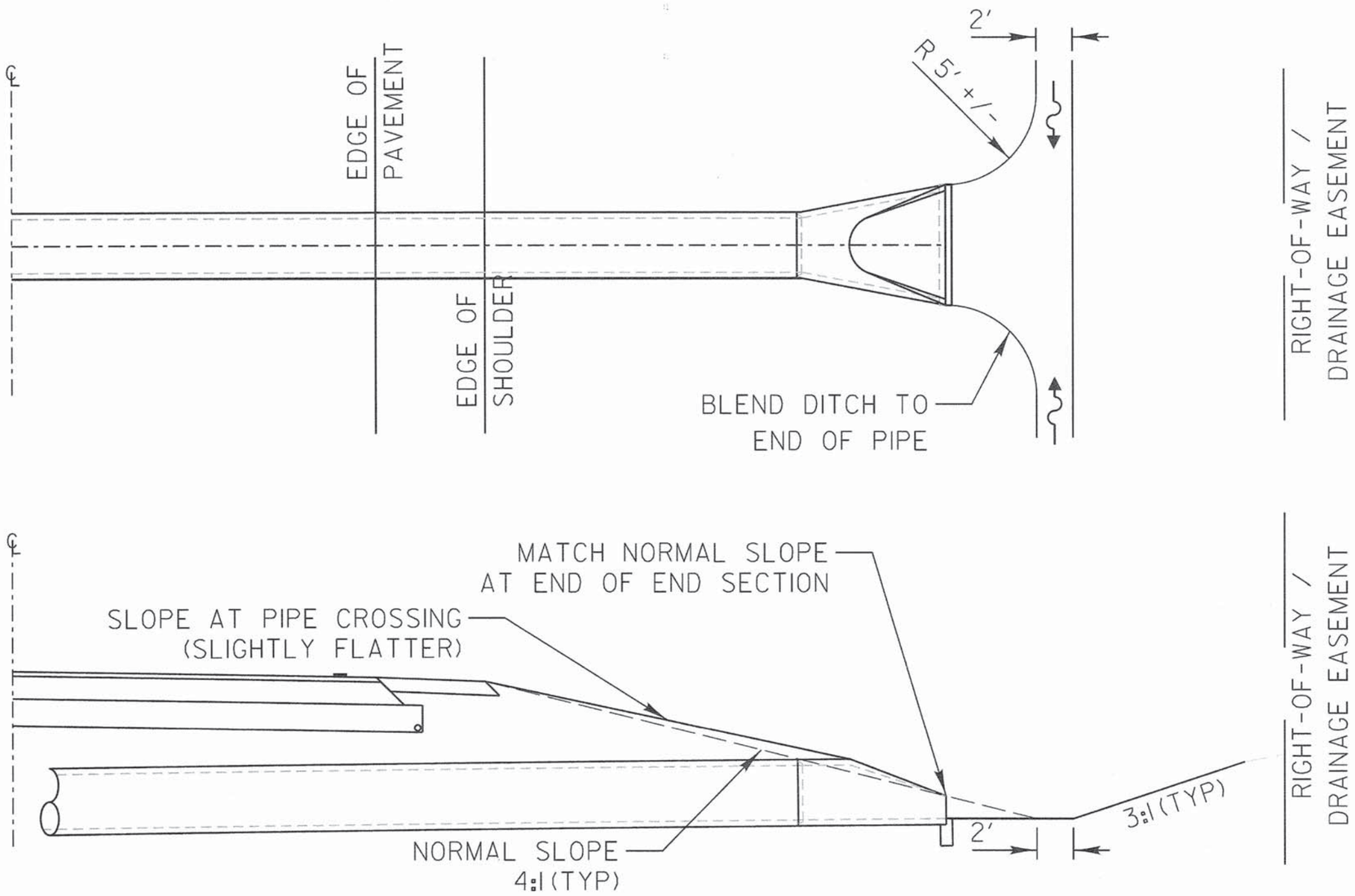

REVISIONS	DATE

LakeCounty Division of Transportation

APPROVED BY: M. G. ZEMAITIS
DATE: JANUARY 19, 2009

TYPICAL PLACEMENT OF PRECAST END SECTIONS ON CROSSROAD CULVERTS

LC5401

PATRICK ENGINEERING INC.
4970 VARSITY DRIVE
LISLE, IL 60532
patrickengineering.com

USER NAME = tkoeppen(Rdwy.Lisle)	DESIGNED -	REVISED -
PLOT CONFIG= pdfNOLAYERSbw.pltcfg	DRAWN -	REVISED -
PLOT SCALE = 1:100	CHECKED -	REVISED -
PLOT DATE = 7/2/2014 11:50:32 PM	DATE - 6/30/2014	REVISED -

STATE OF ILLINOIS
DEPARTMENT OF TRANSPORTATION

WASHINGTON STREET FROM HARYAN WAY TO LAKE STREET
LAKE COUNTY DOT STANDARDS

SCALE: | SHEET NO. | STA. | TO STA.

F.A.U RTE.	SECTION	COUNTY	TOTAL SHEETS	SHEET NO.
187	11-00121-11-BR	LAKE	496	333

FED. ROAD DIST. NO. | ILLINOIS | FED. AID PROJECT

61A63

PENTABLE = ...\Lisle\PenTables\TransPen.tbl

O:\LCDOT\21150.004\Drawings\shts\Stds\S_STD_LCDOT_LC5401.dgn

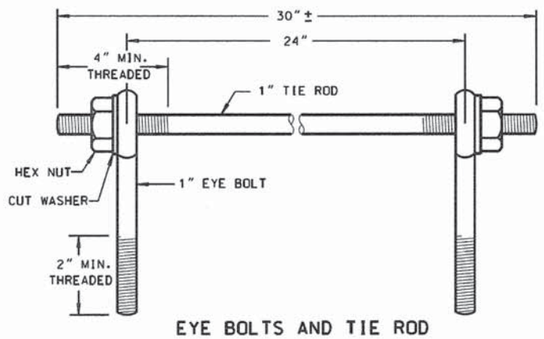

EYE BOLTS AND TIE ROD

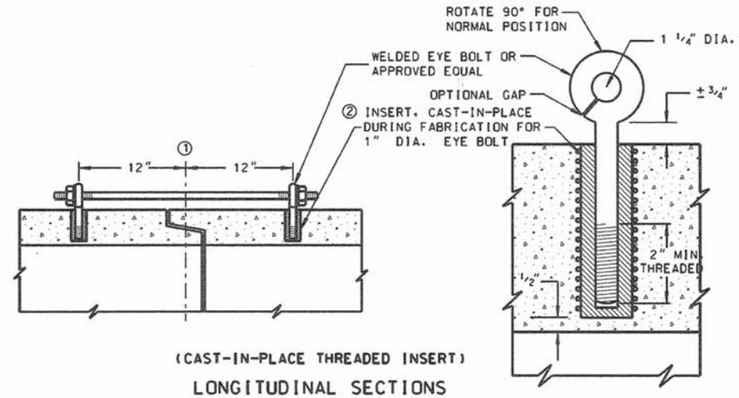

(CAST-IN-PLACE THREADED INSERT)

LONGITUDINAL SECTIONS

EYE BOLT AND TIE ROD ASSEMBLY (ALTERNATE NO. 1)

GENERAL NOTES

DETAILS OF CONSTRUCTION, MATERIALS AND WORKMANSHIP NOT SHOWN ON THIS DRAWING SHALL CONFORM TO THE PERTINENT REQUIREMENTS OF THE STANDARD SPECIFICATIONS AND APPLICABLE SPECIAL PROVISIONS. JOINT TIES AND HARDWARE SHALL BE GALVANIZED STEEL.

CONCRETE CULVERT PIPE AND SEWER PIPE SHALL BE TIED TOGETHER IN THE MANNER ILLUSTRATED BY THIS DETAIL AT THE LAST THREE JOINTS BEFORE A FLARED END SECTION

THE CONTRACTOR MAY USE EITHER ALTERNATE 1, 2 OR 3 FOR CONCRETE PIPE.

UNLESS OTHERWISE STATED IN THE CONTRACT THE MATERIALS, FABRICATION AND WORK NECESSARY TO TIE CULVERT PIPE AS INDICTED ON THE PLANS AND BY THIS DETAIL WILL BE CONSIDERED INCLUDED IN THE COST OF PIPE CULVERTS OR STORM SEWERS.

DETAILED DRAWINGS FOR PROPOSED ALTERNATE DESIGNS FOR GALVANIZED STEEL JOINT TIES SHALL BE SUBMITTED TO THE ENGINEER FOR APPROVAL.

① ℄ OF TONGUE AND GROOVE OR BELL AND SPIGOT JOINTS.

② THE INSIDE OF THE THREADED INSERTS SHALL BE CLEAN TO ALLOW THE INSERTION OF THREADED EYE BOLTS.

③ HOLES SHALL BE CAST-IN-PLACE OR DRILLED 12" FROM ℄ OF TONGUE AND GROOVE.

④ BOLT PROJECTION INSIDE OF PIPE SHALL NOT EXCEED 2".

⑤ OPENING TO BE ROD DIAMETER + 1 INCH.

⑥ LENGTH ADEQUATE TO EXTEND TO WITHIN 1/2 INCH OF THE INNER SURFACE OF THE PIPE.

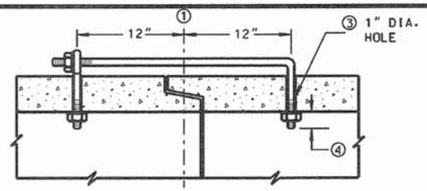

(TONGUE & GROOVE PIPE)

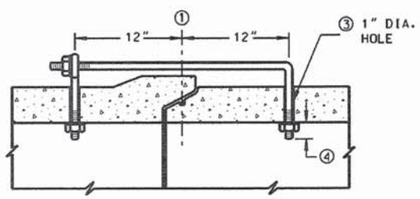

(MODIFIED BELL PIPE)

LONGITUDINAL SECTION

EYE BOLT DIMENSION TABLE

PIPE SIZE	L = LENGTH	
	TONGUE & GROOVE PIPE	MODIFIED BELL PIPE
18" TO 24"	4 1/2"	6 1/4"
30"	5"	7"
36"	5 1/2"	7"
42"	6"	
48"	6 1/2"	
60"	7 1/2"	
66"	8"	

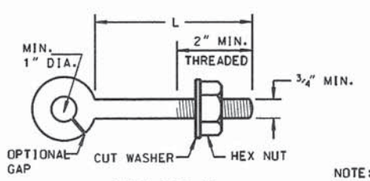

EYE BOLT

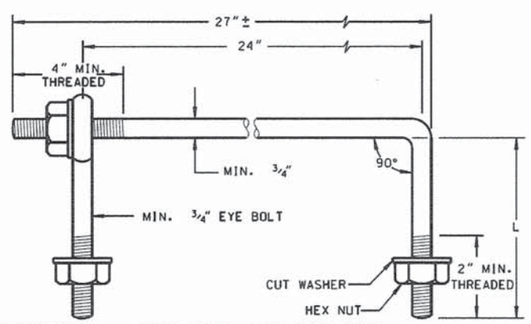

EYE BOLT AND TIE ROD

NOTE:
TWO EYE BOLTS MAY BE USED WITH A 30" LONG THREADED ROD IN LIEU OF THE 90° BENT TIE ROD.

(JOINT TIES FOR 18" TO 66" DIA. CONCRETE PIPE)

EYE BOLT AND TIE ROD ASSEMBLY (ALTERNATE NO. 2)

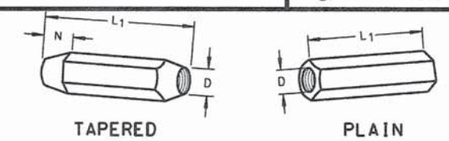

TAPERED PLAIN

RIGHT AND LEFT THREADS

SLEEVE NUTS

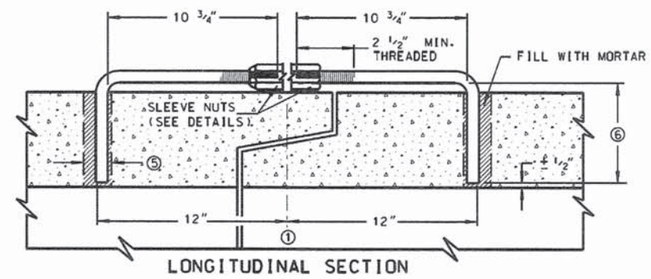

LONGITUDINAL SECTION

(JOINT TIES FOR 12" TO 108" DIA. CONCRETE PIPE)

ADJUSTABLE TIE ROD (ALTERNATE NO. 3)

ADJUSTABLE TIE ROD TABLE

PIPE DIAMETER	TIE ROD DIAMETER	D	L_1	N
12-60	5/8	5/8	5	1/2
66-84	3/4	3/4	5	1/2
90-108	1	1	7	1 7/16

DIMENSIONS SHOWN ARE IN INCHES

NOT TO SCALE

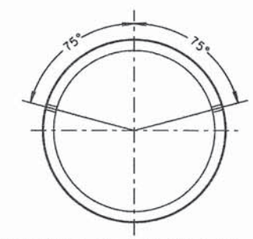

PLACEMENT OF (2) CAST-IN-PLACE INSERTS OR HOLES DURING FABRICATION FOR PIPE SECTIONS REQUIRING TIE RODS

TRANSVERSE SECTION

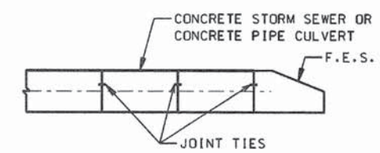

TYPICAL JOINT TIE LOCATIONS

REVISIONS	DATE
ADDED JOINT TIE MAT'L	7/8/11

LakeCounty Division of Transportation

APPROVED BY: M. ZEMAITIS
DATE: 04/01/11

JOINT TIES FOR CONCRETE PIPE

LC5402

REVISIONS / REMARKS					
NO.	DESCRIPTION	DATE	BY	SURVEYOR:	/
		/ /		DSGNR/LIAISON:	
		/ /		PLOTTED BY:	hdrmc 7/15/2011

FILE NAME: C:\Documents and Settings\hdrmc\My Documents\To ITS\LC5402 JOINT TIES FOR CONCRETE PIPE.dgn

LakeCounty Division of Transportation

PROJECT NAME	ROUTE	SECTION	SECTION NUMBER	SHEET	SHEETS
LAKE COUNTY STANDARDS & DETAILS	CH		- - -	XX	XX

PENTABLE = ...\Lisle\PenTable\TransPen.tbl

PATRICK ENGINEERING INC.
4970 VARSITY DRIVE
LISLE, IL 60532
patrickengineering.com

USER NAME = tkoeppen(Rdwy.Lisle)	DESIGNED -	REVISED -	
PLOT CONFIG= pdfNOLAYERSbw.pltcfg	DRAWN -	REVISED -	
PLOT SCALE = 1:100	CHECKED -	REVISED -	
PLOT DATE = 7/2/2014 11:50:52 PM	DATE - 6/30/2014	REVISED -	

STATE OF ILLINOIS
DEPARTMENT OF TRANSPORTATION

WASHINGTON STREET FROM HARYAN WAY TO LAKE STREET
LAKE COUNTY DOT STANDARDS

SCALE: SHEET NO. STA. TO STA.

F.A.U RTE.	SECTION	COUNTY	TOTAL SHEETS	SHEET NO.
187	11-00121-11-BR	LAKE	496	334
				61A63

FED. ROAD DIST. NO. ILLINOIS FED. AID PROJECT

G:\LCDOT\21150.004\Drawings\shts\Stds\S_STD_LCDOT_LC5402.dgn

DRAINAGE STRUCTURES (EDGE OF PAVEMENT)

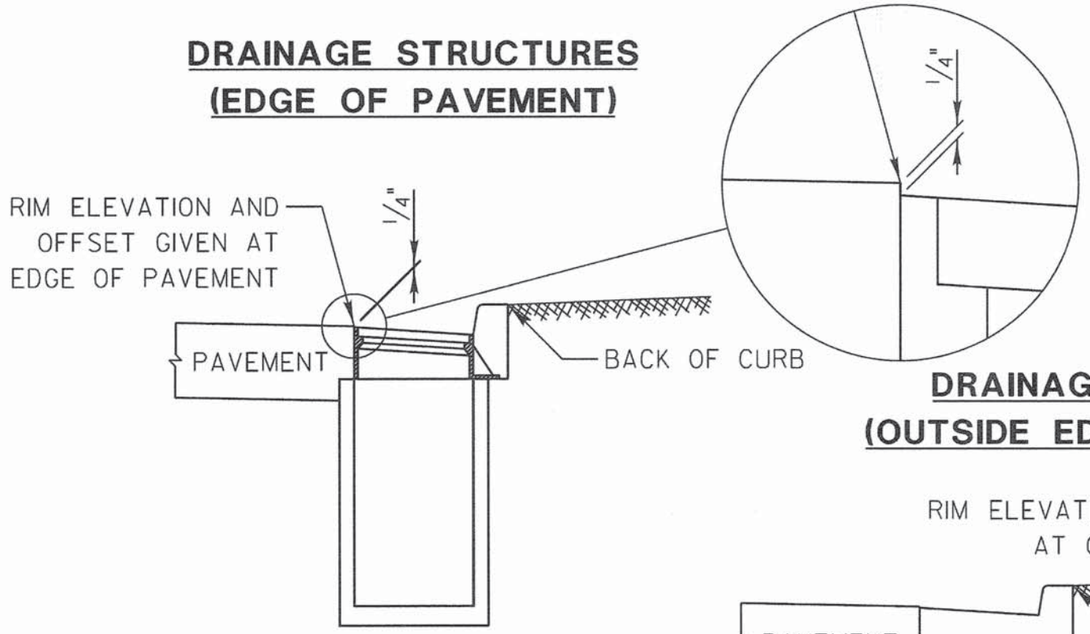

DRAINAGE STRUCTURES (OUTSIDE EDGE OF PAVEMENT)

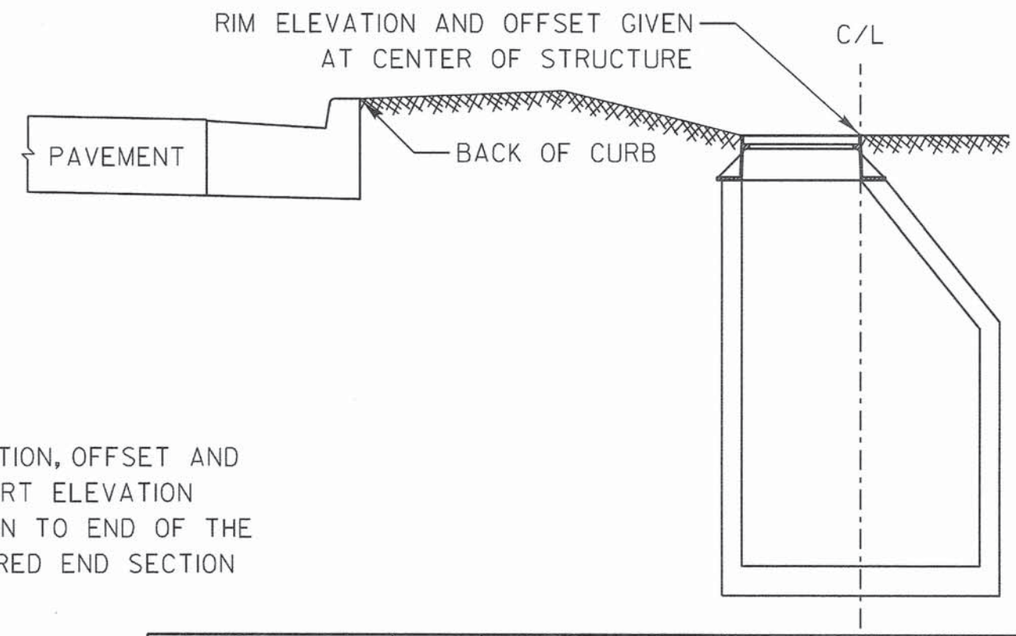

END SECTION

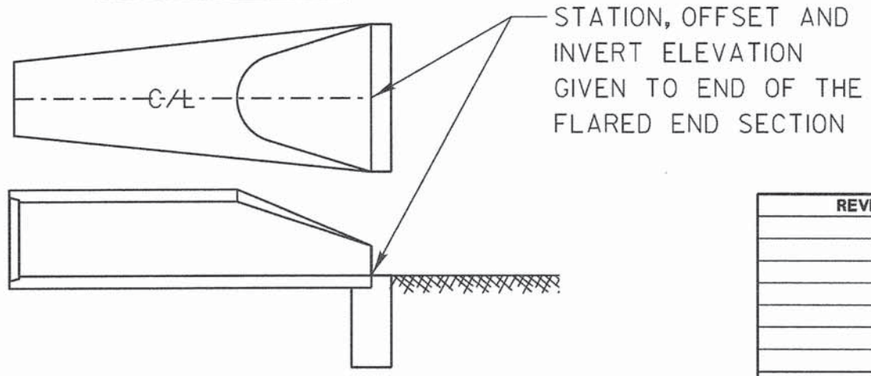

REVISIONS	DATE

LakeCounty
Division of Transportation

APPROVED BY: MGZ
DATE: 03/09/2012

DRAINAGE STRUCTURE RIM ELEVATIONS AND OFFSETS

LC6003

PENTABLE = ...\Lisle\PenTables\TransPen.tbl

PATRICK ENGINEERING INC.
4970 VARSITY DRIVE
LISLE, IL 60532
patrickengineering.com
PATRICK ENGINEERING

USER NAME = tkoeppen(Rdwy_Lisle)	DESIGNED -	REVISED -
PLOT CONFIG= pdfNOLAYERSbw.pltcfg	DRAWN -	REVISED -
PLOT SCALE = 1:100	CHECKED -	REVISED -
PLOT DATE = 7/2/2014 11:51:17 PM	DATE - 6/30/2014	REVISED -

STATE OF ILLINOIS
DEPARTMENT OF TRANSPORTATION

WASHINGTON STREET FROM HARYAN WAY TO LAKE STREET
LAKE COUNTY DOT STANDARDS

SCALE: | SHEET NO. | STA. | TO STA.

F.A.U RTE.	SECTION	COUNTY	TOTAL SHEETS	SHEET NO.
187	11-00121-11-BR	LAKE	496	335
				61A63

FED. ROAD DIST. NO. | ILLINOIS | FED. AID PROJECT

G:\LCDOT\21150.004\Drawings\shts\Stds\S_STD_LCDOT_LC6003.dgn

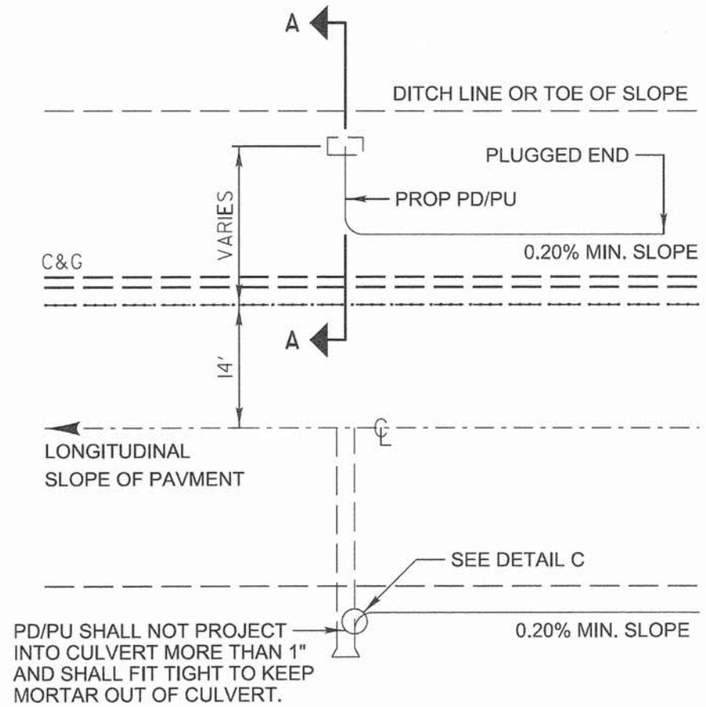

TYPICAL PIPE DRAIN/ PIPE UNDERDRAIN OUTLET

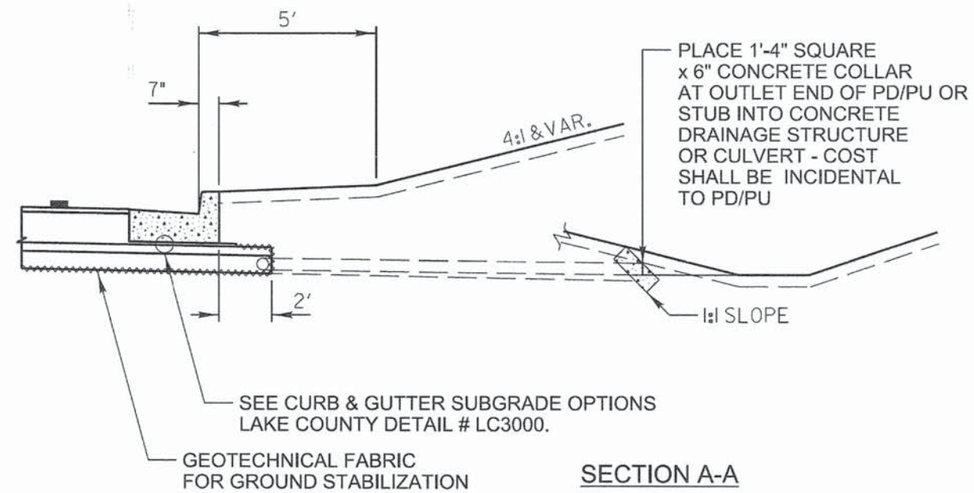

SECTION A-A

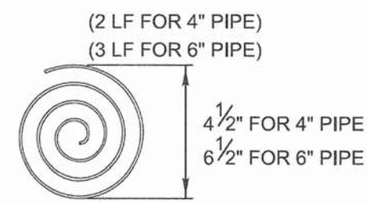

3/16" WIRE STOCK BENT TO A SPIRAL CONFIGURATION.
TO INSTALL, TWIST INTO PD/PU END.
(FOR CORRUGATED CIRCULAR METAL PIPE)

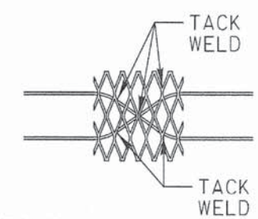

6"x6" EXPANDED METAL SHIELD WITH TWO 2'-6" LONG PREFABRICATED 6 GAGE STEEL STRUTS FOR SNUG FIT INTO THE PD/PU END.

RODENT SHIELDS DETAIL

(ALTERNATES)

NOT TO SCALE

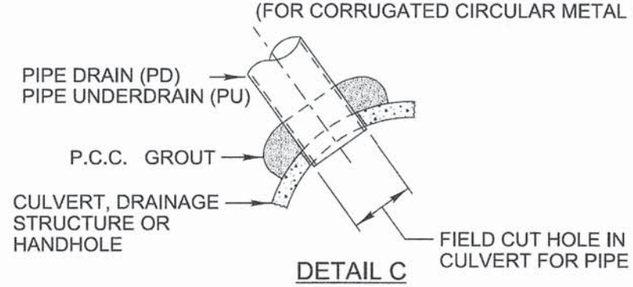

DETAIL C

DESIGN NOTES:

All work shall be according to the applicable portions of the "Standard Specifications" except as modified hereon.

In addition to the requirements of Article 601.08 of the "Standard Specifications", the contract unit price per foot for pipe drains 4" & 6" and pipe underdrains 4" shall include the cost of furnishing and placing the rodent shield.

The removable rodent shield shall be furnished and installed in accordance with one of the configurations shown. The shield shall be fabricated from steel wire, or expanded metal, as detailed above and shall be galvanized after fabrication in accordance with AASHTO M-111. Other submitted designs for a removable rodent shield will be allowed with the approval of the Engineer.

REVISIONS	DATE
Pipe Drain Added to Labels	5/19/2009
Revised Type A to Type B Aggregate	12/20/12
Removed HMA Shldr & Agg	11/20/13

LakeCounty
Division of Transportation

APPROVED BY: M. G. ZEMAITIS
DATE: APRIL 1, 2007

SUB-SURFACE DRAINS

LC6020

ELEVATION, 3-RAIL W/RINGS, 8' NOM. LENGTH

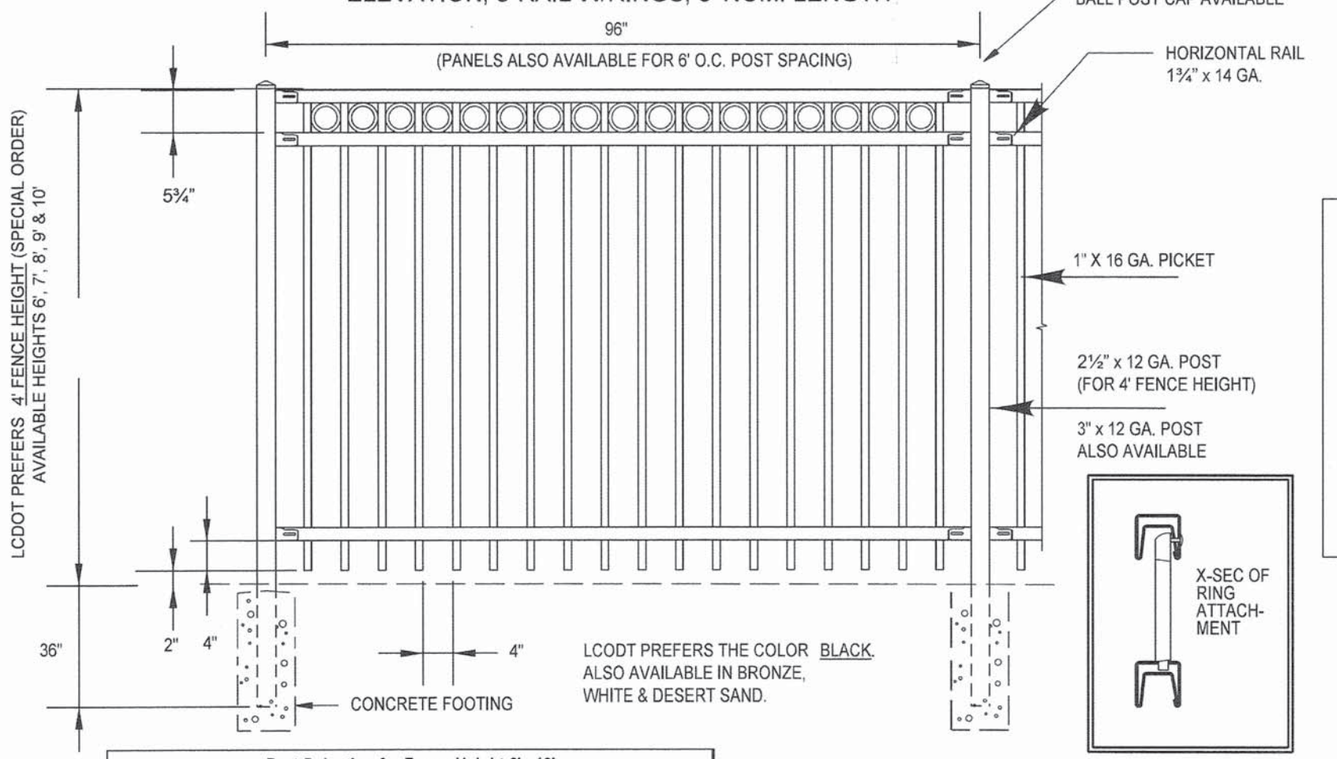

Post Selection for Fence Height 6' - 10'				
Wind Loading				
Fence Height (FT)	Rail Length (FT)	Post Size	Wind Load Capacity Factor (PSF)	Typical Wind Load Capacity (mph)
6	6	2 ½" x 12 GA.	45.5	133.0
		3" x 12 GA.	54.6	146.0
	8	2 ½" x 12 GA.	34.2	116.0
		3" x 12 GA.	41.0	127.0
7	6	2 ½" x 12 GA.	33.4	114.0
		3" x 12 GA.	40.0	125.0
	8	2 ½" x 12 GA.	25.0	99.0
		3" x 12 GA.	30.0	108.0
8	6	2 ½" x 12 GA.	25.6	100.0
		3" x 12 GA.	30.7	110.0
	8	2 ½" x 12 GA.	19.2	87.0
		3" x 12 GA.	23.0	95.0
		4" x 12 GA.	30.6	110.0
9	6	4" x 12 GA.	32.0	113.0
10	6	4" x 12 GA.	28.7	107.0

CROSS SECTION OF HORIZONTAL RAIL

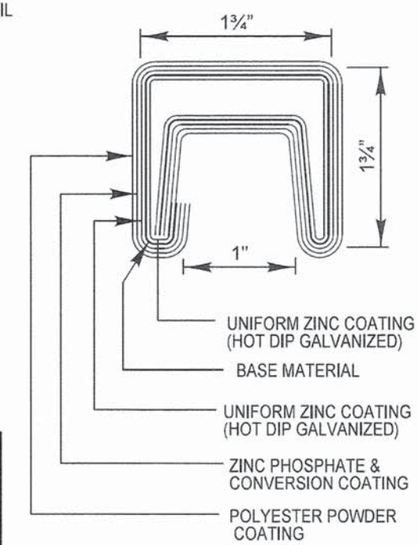

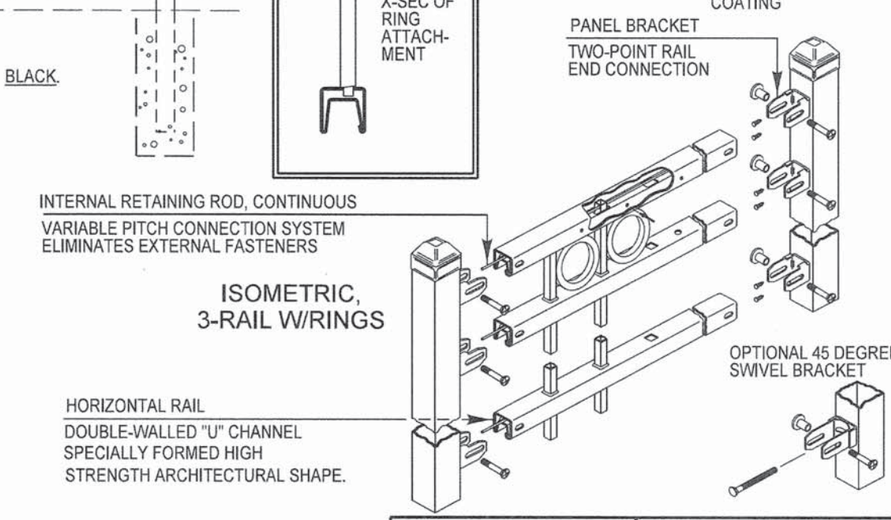

GATES: SPECIFY OPENING WIDTHS
SINGLE _____ QUANTITY_____
DOUBLE _____ QUANTITY_____

REVISIONS	DATE
Update Text	7/15/11

LakeCounty
Division of Transportation

APPROVED BY: M. G. ZEMAITIS
DATE: APRIL 1, 2007

ORNAMENTAL FENCE THREE RAIL W/RINGS (ONE MFGR'S DETAILS)

LC6602

PENTABLE = ...\Lisle\PenTables\TransPen.tbl

PATRICK ENGINEERING
PATRICK ENGINEERING INC.
4970 VARSITY DRIVE
LISLE, IL 60532
patrickengineering.com

USER NAME = tkoeppen(Rdwy.Lisle)	DESIGNED -	REVISED -
PLOT CONFIG= pdfNOLAYERSbw.pltcfg	DRAWN -	REVISED -
PLOT SCALE = 1:100	CHECKED -	REVISED -
PLOT DATE = 7/2/2014 11:52:03 PM	DATE - 6/30/2014	REVISED -

STATE OF ILLINOIS
DEPARTMENT OF TRANSPORTATION

WASHINGTON STREET FROM HARYAN WAY TO LAKE STREET
LAKE COUNTY DOT STANDARDS

SCALE: | SHEET NO. | STA. | TO STA.

F.A.U RTE.	SECTION	COUNTY	TOTAL SHEETS	SHEET NO.
187	11-00121-11-BR	LAKE	496	337

61A63

FED. ROAD DIST. NO. | ILLINOIS | FED. AID PROJECT

G:\LCDOT\21150.004\Drawings\shts\Stds\S_STD_LCDOT_LC6602.dgn

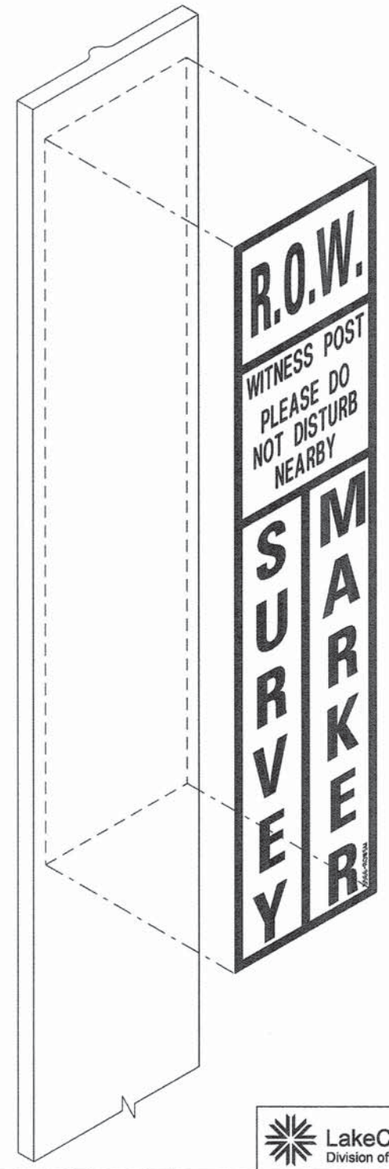

LakeCounty
Division of Transportation

APPROVED BY: M. G. ZEMAITIS
DATE: APRIL 1, 2007

REVISIONS	DATE

WITNESS POST

LC6650

PATRICK ENGINEERING INC.
4970 VARSITY DRIVE
LISLE, IL 60532
patrickengineering.com
PATRICK ENGINEERING

USER NAME = tkoeppen(Rdwy.Lisle)	DESIGNED -	REVISED -	
PLOT CONFIG= pdfNOLAYERSbw.pltcfg	DRAWN -	REVISED -	
PLOT SCALE = 1:100	CHECKED -	REVISED -	
PLOT DATE = 7/2/2014 11:52:24 PM	DATE - 6/30/2014	REVISED -	

STATE OF ILLINOIS
DEPARTMENT OF TRANSPORTATION

WASHINGTON STREET FROM HARYAN WAY TO LAKE STREET
LAKE COUNTY DOT STANDARDS

SCALE: | SHEET NO. | STA. | TO STA.

F.A.U RTE.	SECTION	COUNTY	TOTAL SHEETS	SHEET NO.
187	11-00121-11-BR	LAKE	496	338
				61A63

FED. ROAD DIST. NO. | ILLINOIS | FED. AID PROJECT

PENTABLE = ...\Lisle\PenTable\TransPen.tbl

D:\LCDOT\21150.004\Drawings\shts\Stds\S_STD_LCDOT_LC6650.dgn

TYPICAL APPLICATION OF TRAFFIC CONTROL DEVICES for HIGHWAY CONSTRUCTION, CONTRACT MAINTENANCE and UTILITY OPERATIONS

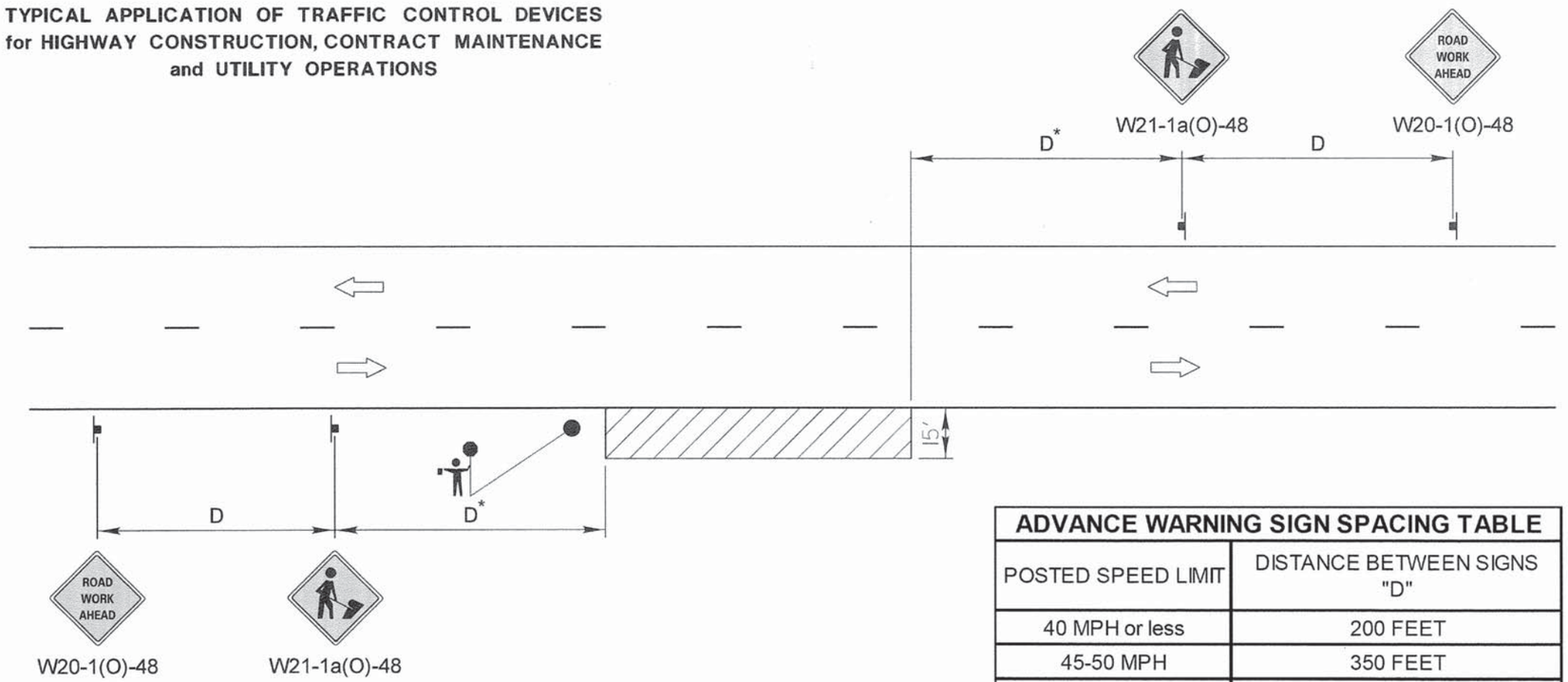

ADVANCE WARNING SIGN SPACING TABLE	
POSTED SPEED LIMIT	DISTANCE BETWEEN SIGNS "D"
40 MPH or less	200 FEET
45-50 MPH	350 FEET
55 MPH	500 FEET

GENERAL NOTES:

This special detail is used at any time, any vehicle, equipment, workers or their activities require a stationary, intermittent or continuous moving operation within 15 feet of the traffic lane, where the average speed is 1 mph or less.

* Minimum distance "D" is shown in the Advance Warning Sign Spacing Table. If the work is a moving operation, the maximum distance "D" may be extended to ½ the length required for one normal working day's operation or 4 miles, whichever is less.

If the work operation does not exceed 60 minutes, traffic control may be according to I.D.O.T. Highway Standard 701301.

SYMBOLS

- WORK AREA
- SIGN ON PORTABLE OR PERMANENT SUPPORT
- FLAGGER WITH TRAFFIC CONTROL SIGN WHEN REQUIRED

NOT TO SCALE

MODIFIED IDOT STANDARD 701011-02

REVISIONS	DATE
Title Block Revision	8/1/09
Reformat LCDOT Standard	7/15/10

LakeCounty Division of Transportation

APPROVED BY: A. KHAWAJA
DATE: APRIL 1, 2007

TWO LANE, TWO WAY, OFF-ROAD OPERATIONS DAY OPERATIONS ONLY

LC7000

PATRICK ENGINEERING INC.
4970 VARSITY DRIVE
LISLE, IL 60532
patrickengineering.com

USER NAME = tkoeppen(Rdwy_Lisle)	DESIGNED -	REVISED -
PLOT CONFIG= pdfNOLAYERSbw.pltcfg	DRAWN -	REVISED -
PLOT SCALE = 1:100	CHECKED -	REVISED -
PLOT DATE = 7/2/2014 11:52:43 PM	DATE - 6/30/2014	REVISED -

STATE OF ILLINOIS
DEPARTMENT OF TRANSPORTATION

WASHINGTON STREET FROM HARYAN WAY TO LAKE STREET
LAKE COUNTY DOT STANDARDS

SCALE: | SHEET NO. | STA. | TO STA.

F.A.U RTE.	SECTION	COUNTY	TOTAL SHEETS	SHEET NO.
187	11-00121-11-BR	LAKE	496	339

FED. ROAD DIST. NO. | ILLINOIS | FED. AID PROJECT

61A63

PENTABLE = ...\Lisle\PenTable\TransPen.tbl

D:\LCDOT\21150.004\Drawings\shts\Stds\S_STD_LCDOT_LC7000.dgn

TYPICAL APPLICATION OF TRAFFIC CONTROL DEVICES for HIGHWAY CONSTRUCTION, CONTRACT MAINTENANCE and UTILITY OPERATIONS

NOT TO SCALE

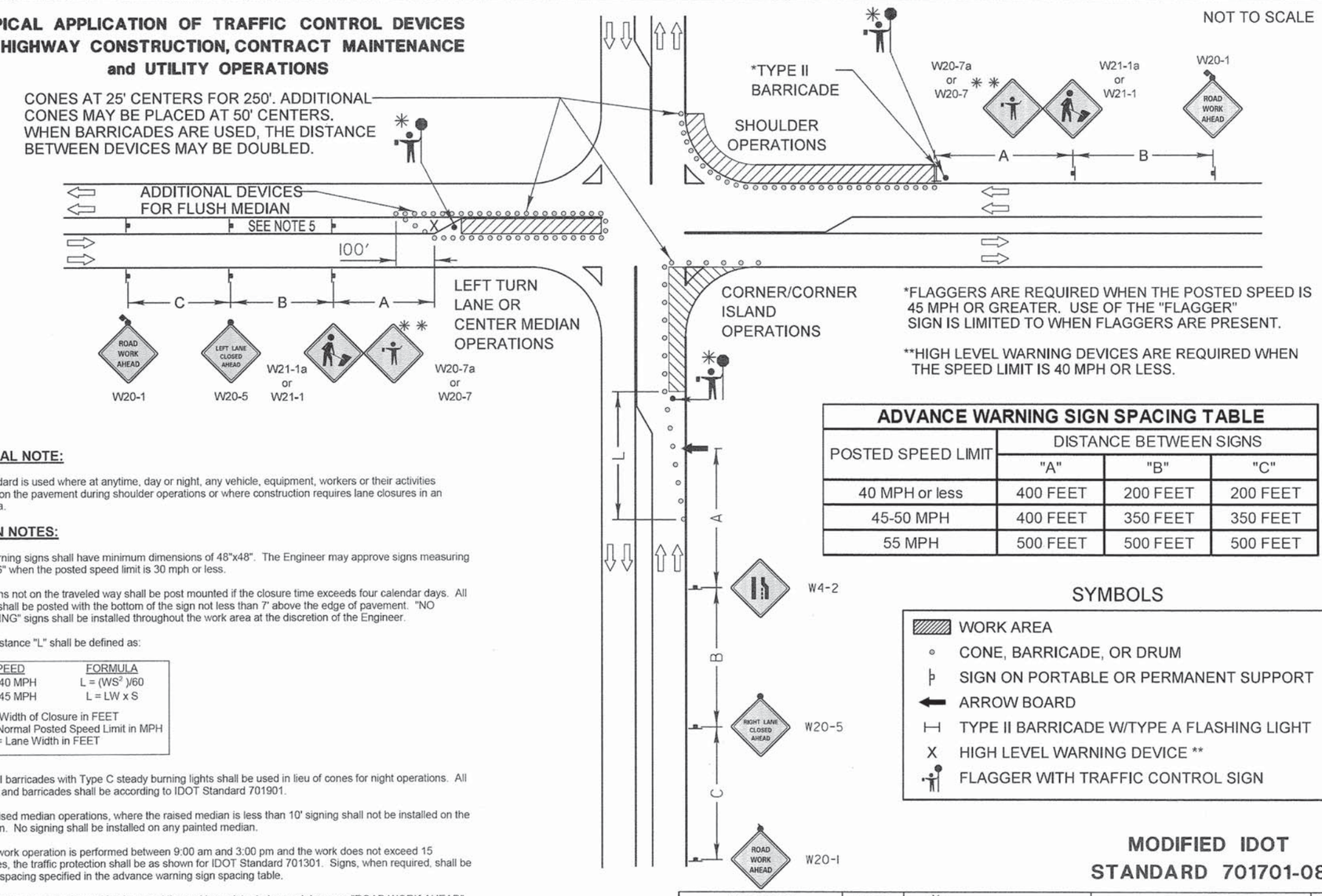

*FLAGGERS ARE REQUIRED WHEN THE POSTED SPEED IS 45 MPH OR GREATER. USE OF THE "FLAGGER" SIGN IS LIMITED TO WHEN FLAGGERS ARE PRESENT.

**HIGH LEVEL WARNING DEVICES ARE REQUIRED WHEN THE SPEED LIMIT IS 40 MPH OR LESS.

ADVANCE WARNING SIGN SPACING TABLE

POSTED SPEED LIMIT	DISTANCE BETWEEN SIGNS		
	"A"	"B"	"C"
40 MPH or less	400 FEET	200 FEET	200 FEET
45-50 MPH	400 FEET	350 FEET	350 FEET
55 MPH	500 FEET	500 FEET	500 FEET

SYMBOLS

- WORK AREA
- CONE, BARRICADE, OR DRUM
- SIGN ON PORTABLE OR PERMANENT SUPPORT
- ARROW BOARD
- TYPE II BARRICADE W/TYPE A FLASHING LIGHT
- X HIGH LEVEL WARNING DEVICE **
- FLAGGER WITH TRAFFIC CONTROL SIGN

GENERAL NOTE:

This Standard is used where at anytime, day or night, any vehicle, equipment, workers or their activities encroach on the pavement during shoulder operations or where construction requires lane closures in an urban area.

DESIGN NOTES:

1. All warning signs shall have minimum dimensions of 48"x48". The Engineer may approve signs measuring 36"x36" when the posted speed limit is 30 mph or less.
2. All signs not on the traveled way shall be post mounted if the closure time exceeds four calendar days. All signs shall be posted with the bottom of the sign not less than 7' above the edge of pavement. "NO PARKING" signs shall be installed throughout the work area at the discretion of the Engineer.
3. The distance "L" shall be defined as:

SPEED	FORMULA
≤ 40 MPH	$L = (WS^2)/60$
≥ 45 MPH	$L = LW \times S$

W = Width of Closure in FEET
S = Normal Posted Speed Limit in MPH
LW = Lane Width in FEET

4. Type II barricades with Type C steady burning lights shall be used in lieu of cones for night operations. All cones and barricades shall be according to IDOT Standard 701901.
5. For raised median operations, where the raised median is less than 10' signing shall not be installed on the median. No signing shall be installed on any painted median.
6. If the work operation is performed between 9:00 am and 3:00 pm and the work does not exceed 15 minutes, the traffic protection shall be as shown for IDOT Standard 701301. Signs, when required, shall be at the spacing specified in the advance warning sign spacing table.
7. If the work area is in the parking lane and the parking exists during work hours, a "ROAD WORK AHEAD" sign shall be installed in advance of work area at the spacing specified in the Advance Warning Sign Spacing Table and the area protected with cones or barricades.
8. Type A flashing lights shall be used on each approach in advance of the work area during hours of darkness and installed above the first two sign in each series and the high level warning devices.
9. Longitudinal dimensions may be adjusted to fit field conditions.
10. Form BT 725 is required.

REVISIONS	DATE
Revised IDOT Reference	2/1/08
Title Block Revision	8/1/09
Reformat LCDOT Standard	7/15/10
Removed "Worker" & "Flagger" signs	6/26/12

LakeCounty Division of Transportation

APPROVED BY: ANTHONY KHAWAJA
DATE: APRIL 1, 2007

MODIFIED IDOT STANDARD 701701-08

URBAN LANE CLOSURE MULTILANE INTERSECTION

LC7003

PENTABLE = ...\Lisle\PenTable\TransPen.tbl

PATRICK ENGINEERING
PATRICK ENGINEERING INC.
4970 VARSITY DRIVE
LISLE, IL 60532
patrickengineering.com

USER NAME = tkoeppen(Rdwy_Lisle)	DESIGNED -	REVISED -	
PLOT CONFIG= pdfNOLAYERSbw.pltcfg	DRAWN -	REVISED -	
PLOT SCALE = 1:100	CHECKED -	REVISED -	
PLOT DATE = 7/2/2014 11:53:02 PM	DATE - 6/30/2014	REVISED -	

STATE OF ILLINOIS
DEPARTMENT OF TRANSPORTATION

WASHINGTON STREET FROM HARYAN WAY TO LAKE STREET
LAKE COUNTY DOT STANDARDS

SCALE: | SHEET NO. | STA. | TO STA.

F.A.U RTE.	SECTION	COUNTY	TOTAL SHEETS	SHEET NO.
187	11-00121-11-BR	LAKE	496	340
				61A63

FED. ROAD DIST. NO. | ILLINOIS | FED. AID PROJECT

D:\LCDOT\21150.004\Drawings\shts\Stds\S_STD_LCDOT_LC7003.dgn

TYPICAL APPLICATION OF TRAFFIC CONTROL DEVICES for HIGHWAY CONSTRUCTION, CONTRACT MAINTENANCE and UTILITY OPERATIONS

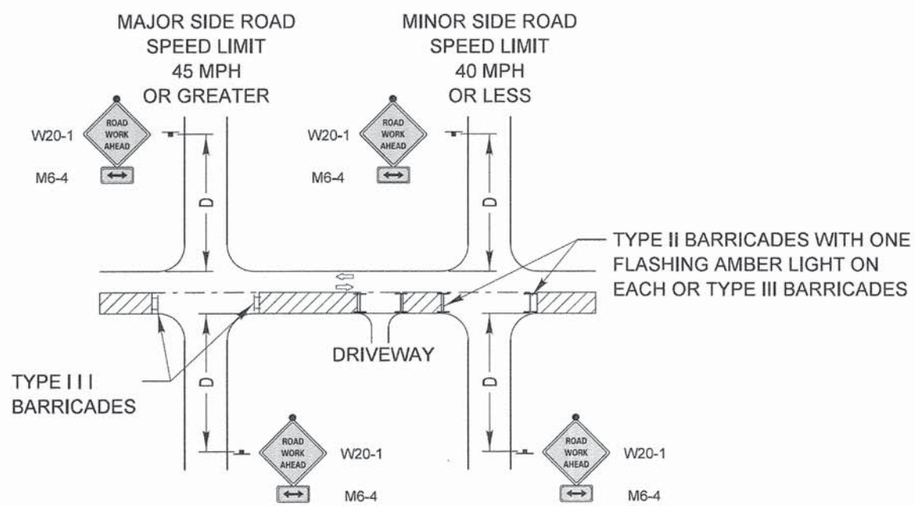

SYMBOLS

- WORK AREA
- SIGN ON PORTABLE OR PERMANENT SUPPORT
- TYPE II BARRICADE W/TYPE A FLASHING LIGHT
- TYPE III BARRICADE

ADVANCE WARNING SIGN SPACING TABLE

POSTED SPEED LIMIT	DISTANCE BETWEEN SIGNS "D"
40 MPH or less	200 FEET
45-50 MPH	350 FEET
55 MPH	500 FEET

NOT TO SCALE

GENERAL NOTE:

This Standard is used where at anytime, day or night, any vehicle, equipment, workers or their activities encroach on the pavement or where construction requires lane closures.

DESIGN NOTES:

1. For a side road with a speed limit of 40 mph or less, the closed portion of the main route shall be protected by blocking with Type II or Type III barricades, ⅓ of the cross section of the closed portion of the roadway.
2. For a side road with a speed limit of 45 mph or greater, the closed portion of the main route shall be protected by blocking with Type III barricades, ½ of the cross section of the closed portion of the roadway.
3. All W20-1 "ROADWORK AHEAD" signs shall be 48" x 48" with fluorescent orange reflective sheeting with an amber Type A flashing light mounted on the sign.
4. When the side road lies between the beginning of the mainline signing and the work zone, a M6-1 Single Headed Arrow shall be used in lieu of the M6-4 Double Headed Arrow.
5. For a lane closure on a side road or driveway, use the applicable portions of the appropriate Highway Standard or Traffic Control Detail. The spacing of the signs and barricades shall be adjusted for field conditions as directed by the engineer. The directional arrow shall be covered or removed when no longer consistent with the side road lane closure.
6. Advance warning signs shall be omitted on driveways unless otherwise noted.
7. The traffic control and protection for side roads and intersections shall be included in the contract unit lump sum price for "TRAFFIC CONTROL AND PROTECTION."

MODIFIED IDOT DISTRICT ONE SIDE ROAD DETAIL

REVISIONS	DATE
Title Block Revision	8/1/09
Reformat LCDOT Standard	7/15/10

LakeCounty Division of Transportation

APPROVED BY: ANTHONY KHAWAJA
DATE: APRIL 1, 2007

TRAFFIC CONTROL and PROTECTION for SIDEROADS, INTERSECTIONS and DRIVEWAYS

LC7004

TYPICAL APPLICATION OF TRAFFIC CONTROL DEVICES for HIGHWAY CONSTRUCTION, CONTRACT MAINTENANCE and UTILITY OPERATIONS

NOT TO SCALE

3 LANE ROAD SECTION with 2-WAY LEFT TURN LANE

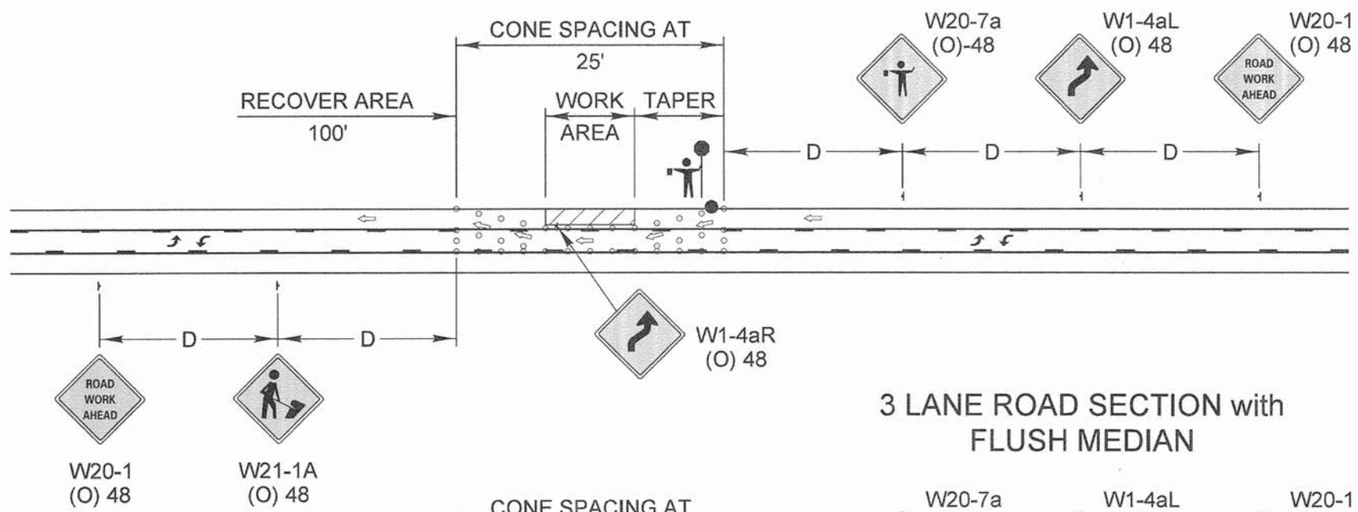

3 LANE ROAD SECTION with FLUSH MEDIAN

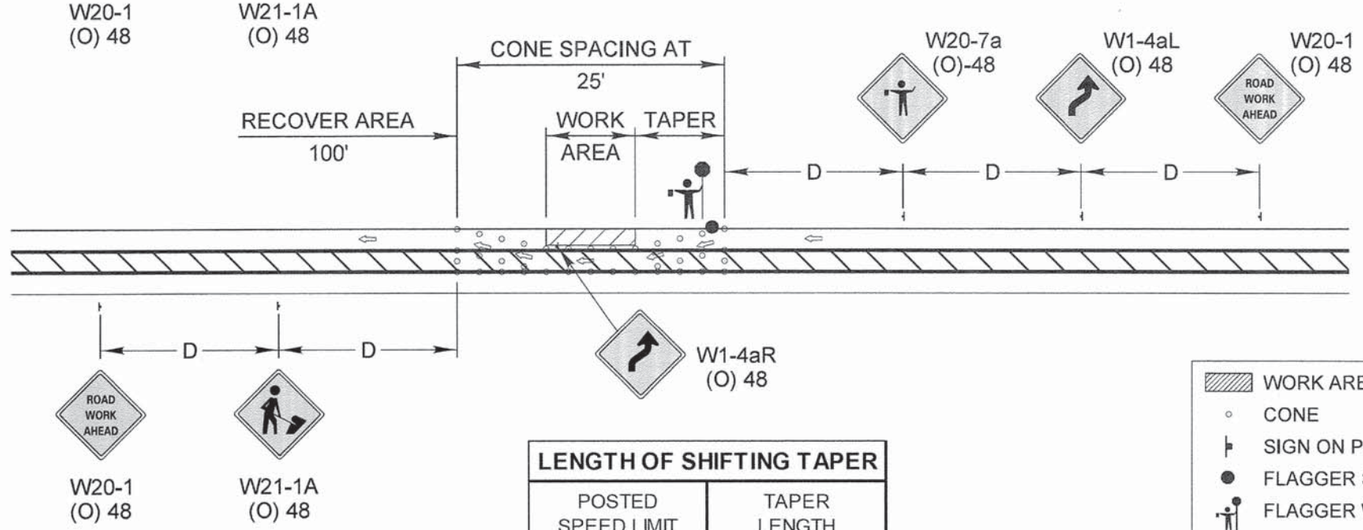

GENERAL NOTE:

This Standard is used where during the day only, any vehicle, equipment, workers or their activities encroach on a 3 lane, two way pavement requiring the closure of one traffic lane.

SYMBOLS

- WORK AREA
- CONE
- SIGN ON PORTABLE OR PERMANENT SUPPORT
- FLAGGER STATION
- FLAGGER WITH SLOW PADDLE

ADVANCE WARNING SIGN SPACING TABLE

POSTED SPEED LIMIT	DISTANCE BETWEEN SIGNS "D"
40 MPH or less	200 FEET
45-50 MPH	350 FEET
55 MPH	500 FEET

LENGTH OF SHIFTING TAPER

POSTED SPEED LIMIT	TAPER LENGTH
30 MPH	100'
35 MPH	125'
40 MPH	150'
45 MPH	275'
50 MPH	300'
55 MPH	325'

REVISIONS	DATE
Title Block Revision	8/1/09
Reformat LCDOT Standard	7/15/10

LakeCounty
Division of Transportation

APPROVED BY: A. KHAWAJA
DATE: APRIL 1, 2007

TYPICAL LANE CLOSURE 3 LANE ROAD SECTION

LC7005

DIRECTION INDICATOR BARRICADES

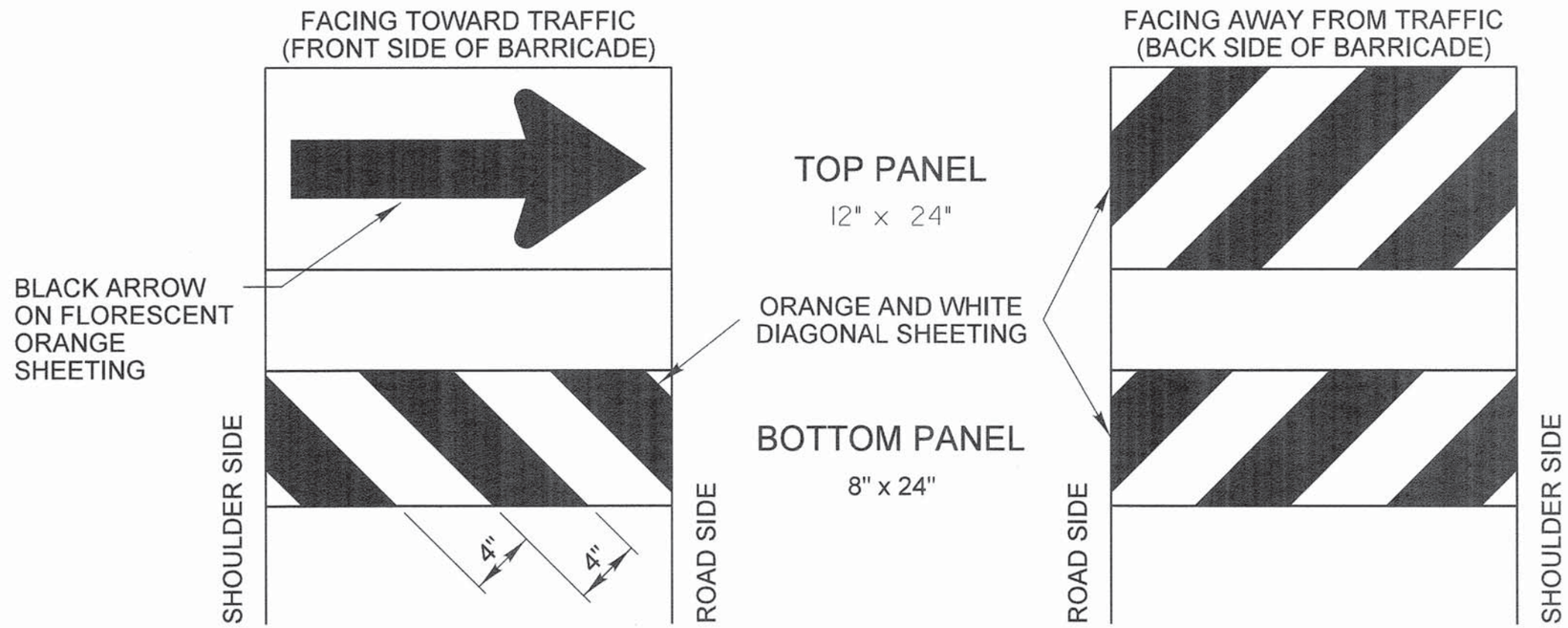

GENERAL NOTES

1) Direction Indicator Barricades shall be constructed from non-metallic Type II barricades meeting the requirements of Article 1106.02 of the Standard Specifications, except where modified by this detail.
2) The Direction Indicator Barricades shall be equipped with Type C steady burning lights if used to channelize traffic during the hours of darkness.
3) The reflective sheeting for the top panel shall be Type AZ fluorescent orange. The diagonal panels shall have orange and white Type A or better reflective sheeting.

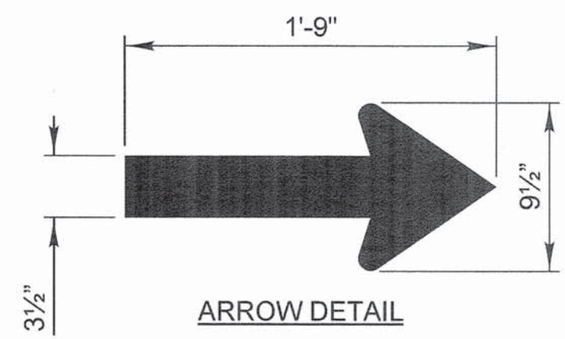

ARROW DETAIL

REVISIONS	DATE
Text Update	7/15/11

LakeCounty Division of Transportation

APPROVED BY: ANTHONY KHAWAJA
DATE: APRIL 1, 2007

TYPICAL APPLICATION OF TRAFFIC CONTROL DEVICES
HIGHWAY CONSTRUCTION, CONTRACT MAINTENANCE

DIRECTION INDICATOR BARRICADES

LC7200

PENTABLE = ...\Lisle\PenTable\TransPen.tbl

30" X 12" WHITE ON GREEN REFLECTIVE BACKGROUND, ⅜" BORDER, LETTER SIZE 4C

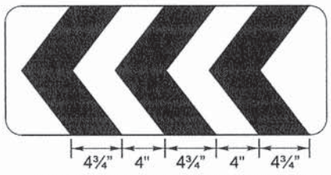

30" X 12" BLACK ON FLOURESCENT ORANGE CHEVRONS

EXAMPLE OF DRIVEWAY SIGN ASSEMBLY INSTALLATION

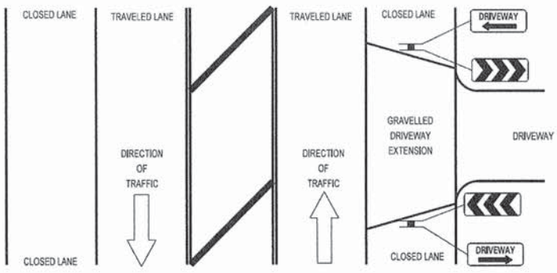

TEMPORARY CONSTRUCTION INFORMATION SIGNING NOTES:

1. The driveway and chevron signs shall be mounted back to back on the near side of the roadway where the entrance is located. There will be two sign assemblies per driveway.
2. Temporary construction information signs shall be post mounted 7' above the near edge of pavement and shall be a minimum of 6' beyond the edge of the nearest traveled lane, or as directed by the Engineer.
3. The retroreflective sign face shall be a minimum of Type "A" material.
4. The temporary construction information signs shall be removed or relocated when the Engineer determines the signs to be no longer necessary.
5. Existing traffic control signs and messages that are in conflict with the proposed maintenance of traffic shall be covered or modified with a temporary overlay as shown in the plans and/or as directed by the Engineer.
6. Install additional temporary sign panel assemblies as shown in the plans and/or directed by the Engineer.

REVISIONS	DATE
Revised Signs & Text	1/1/09
Text Update	7/15/11

LakeCounty Division of Transportation

APPROVED BY: A KHAWAJA
DATE: APRIL 1, 2007

TEMPORARY CONSTRUCTION INFORMATION SIGNS

SHEET 1 OF 2

LC7201

48" X 36"
BLACK ON FLUORESCENT ORANGE
REFLECTIVE BACKGROUND
1" BORDER WITH ⅝"INSET
LETTER SIZE 6D
*LETTER SIZE 6E BOLD

REVISIONS	DATE
Revised Signs & Text	1/1/09
Text Update	7/15/11

LakeCounty Division of Transportation

APPROVED BY: A KHAWAJA
DATE: APRIL 1, 2007

TEMPORARY CONSTRUCTION INFORMATION SIGNS

SHEET 2 OF 2

LC7201

PATRICK ENGINEERING INC
4970 VARSITY DRIVE
LISLE, IL 60532
patrickengineering.com

USER NAME = bkoeppen(RDeng,Lisle)
PLOT CONFIG = pdf(NOLAYERS).pltcfg
PLOT SCALE = 1:20
PLOT DATE = 7/2/2014 11:54:28 PM

DESIGNED - | REVISED -
DRAWN - | REVISED -
CHECKED - | REVISED -
DATE - 6/30/2014 | REVISED -

STATE OF ILLINOIS
DEPARTMENT OF TRANSPORTATION

WASHINGTON STREET FROM HARVAN WAY TO LAKE STREET
LAKE COUNTY DOT STANDARDS

SCALE: | SHEET NO. | STA. | TO STA.

F.A.U. RTE.	SECTION	COUNTY	TOTAL SHEETS	SHEET NO.
187	11-00121-11-BR	LAKE	496	344

FED. ROAD DIST. NO. | ILLINOIS | FED. AID PROJECT

61A63

D:\LC001\Z7158.264\Drawings\sheets\Stds\STD_LC001_LC7201.dgn

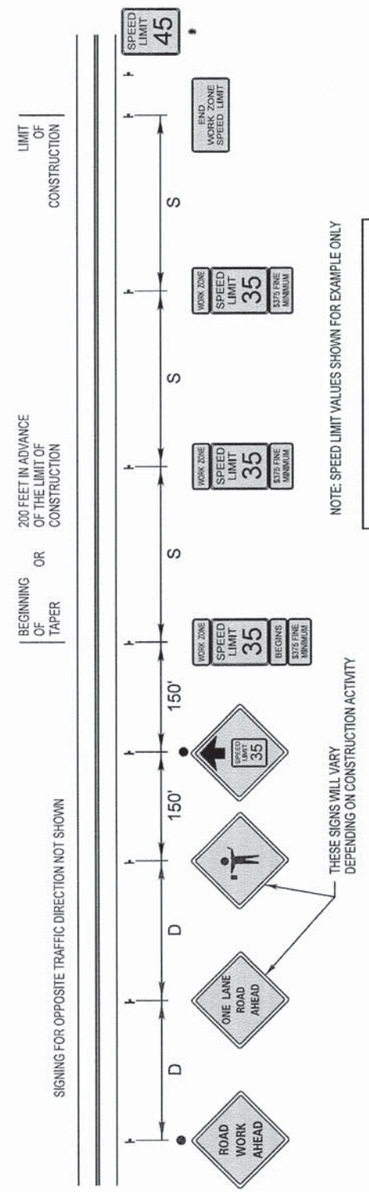

NOTE: SPEED LIMIT VALUES SHOWN FOR EXAMPLE ONLY

ADVANCE WARNING SIGN SPACING TABLE	
ROAD TYPE (EXISTING SPEED LIMIT)	DISTANCE BETWEEN SIGNS "D"
URBAN-LOW SPEED (40 MPH or less)	200 FEET
URBAN-HIGH SPEED (45-50 MPH)	350 FEET
RURAL (55 MPH or greater)	500 FEET

WORK ZONE SPEED LIMIT SIGN SPACING	
WORK ZONE SPEED LIMIT	DISTANCE BETWEEN SIGNS "S"
35 TO 40 MPH	990 FEET to 1,980 FEET
45 TO 50 MPH	1,320 FEET to 2,640 FEET

NOTES:

1. " * " = EXISTING SPEED LIMIT BEFORE CONSTRUCTION.
2. THE SIGN SPACING BETWEEN WORK ZONE SPEED LIMIT SIGNS SHALL BE THE SAME AS COMPARABLE REGULAR SPEED LIMIT SIGNING AS STATED IN THE L.C.D.O.T. POLICY FOR THE ESTABLISHMENT AND POSTING OF SPEED LIMITS ON COUNTY AND TOWNSHIP HIGHWAYS WITHIN LAKE COUNTY, ILLINOIS. A MINIMUM OF 2 WORK ZONE SPEED LIMIT SIGNS SHALL BE REQUIRED PER DIRECTION OF TRAFFIC.
3. EXISTING SPEED LIMIT SIGNS AND POST SHALL BE REMOVED AND RETURNED TO THE L.C.D.O.T.'S SIGN SHOP WITHIN 24 HOURS OF REMOVAL.
4. ON MULTILANE HIGHWAYS, WORK ZONE SPEED LIMIT AND ADVANCE CONSTRUCTION SIGNING SHALL BE ON THE RIGHT SIDE RIGHT-OF-WAY AND THE LEFT MEDIAN. WHEN THE MEDIAN IS NOT PAVED AND THE WIDTH IS 10 FEET OR GREATER.
5. ALL SIGNS SHALL BE PERMANENTLY POST MOUNTED IF THE SIGNS WILL BE DISPLAYED FOR MORE THAN 48 HOURS.

REVISIONS	DATE
Reformat LCDOT Standard	7/15/10
Revised Labels	6/26/12

LakeCounty
Division of Transportation

APPROVED BY: A. KHAWAJA
DATE: 4/14/09

WORK ZONE SPEED LIMIT SIGNING DIAGRAM
(SHEET 1 OF 2)

LC7203

WORK ZONE SPEED LIMIT SIGNS

W3-5 (O) - 48

W2-I 115 (O) 3015

R2-1 3036

W2-I 113 (O) 3011

R2-I 106 3015

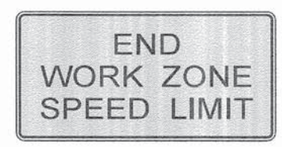

G20-I 102, 24"X48"

W2-I 115 (O) 3015

R2-1 3036

R2-I 106 3015

R2-1 SPECIAL

REVISIONS	DATE
Reformat LCDOT Standard	7/15/10
Revised Labels	6/26/12

LakeCounty
Division of Transportation

APPROVED BY: A.KHAWAJA
DATE: 4/14/09

WORK ZONE SPEED LIMIT SIGNING DIAGRAM
(SHEET 2 OF 2)

LC7203

PENTABLE = ...\Lisle\PenTable\TransPen.tbl

PATRICK ENGINEERING
PATRICK ENGINEERING INC.
4970 VARSITY DRIVE
LISLE, IL 60532
patrickengineering.com

USER NAME = tkoeppen(Rdwy.Lisle)	DESIGNED -	REVISED -	
PLOT CONFIG= pdfNOLAYERSbw.pltcfg	DRAWN -	REVISED -	
PLOT SCALE = 1:100	CHECKED -	REVISED -	
PLOT DATE = 7/2/2014 11:54:36 PM	DATE - 6/30/2014	REVISED -	

STATE OF ILLINOIS
DEPARTMENT OF TRANSPORTATION

WASHINGTON STREET FROM HARYAN WAY TO LAKE STREET
LAKE COUNTY DOT STANDARDS

SCALE: | SHEET NO. | STA. | TO STA.

F.A.U RTE.	SECTION	COUNTY	TOTAL SHEETS	SHEET NO.
187	11-00121-11-BR	LAKE	496	345
				61A63

FED. ROAD DIST. NO. | ILLINOIS | FED. AID PROJECT

D:\LCDOT\21150.004\Drawings\shts\Stds\S_STD_LCDOT_LC7203.dgn

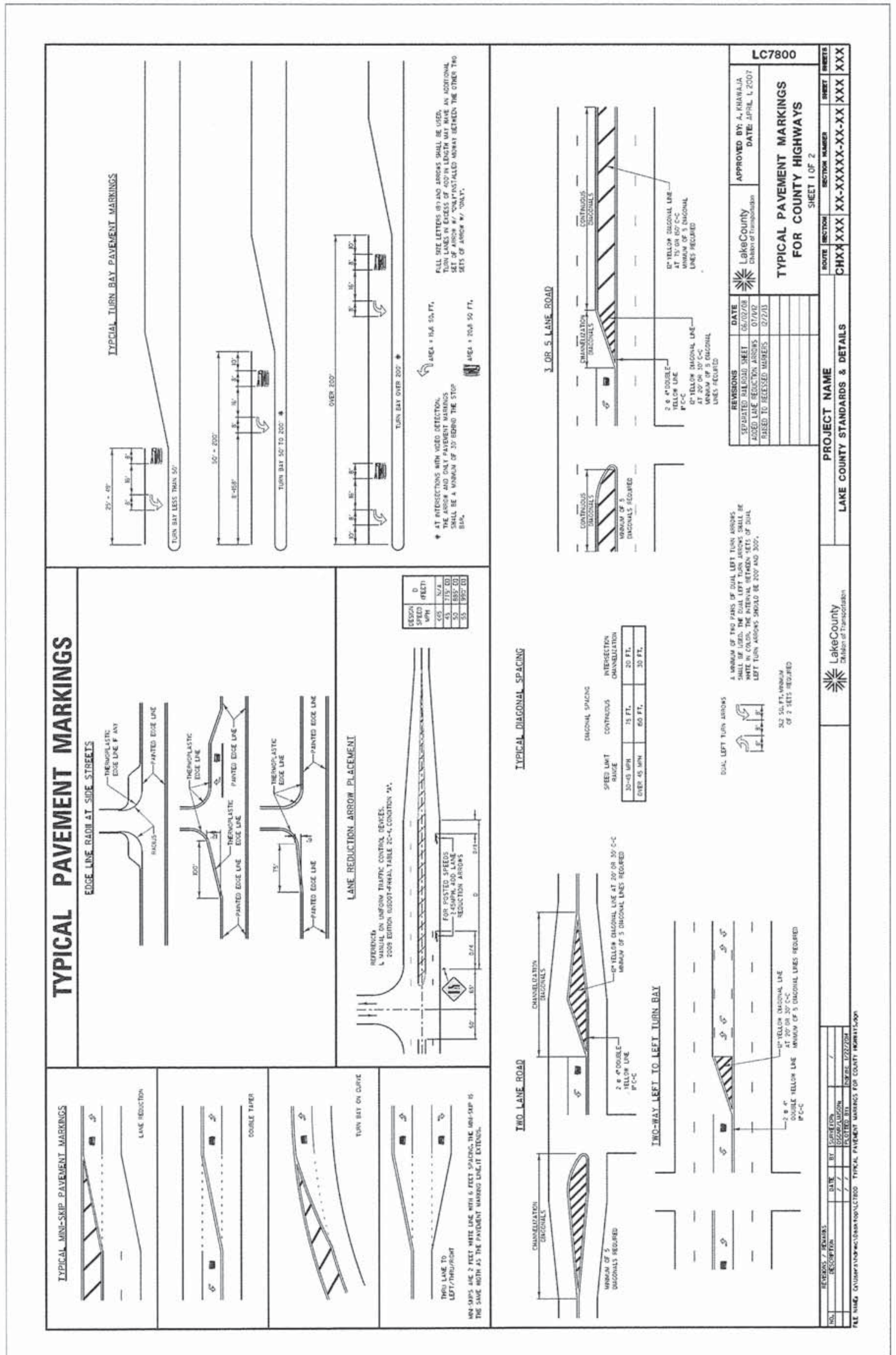

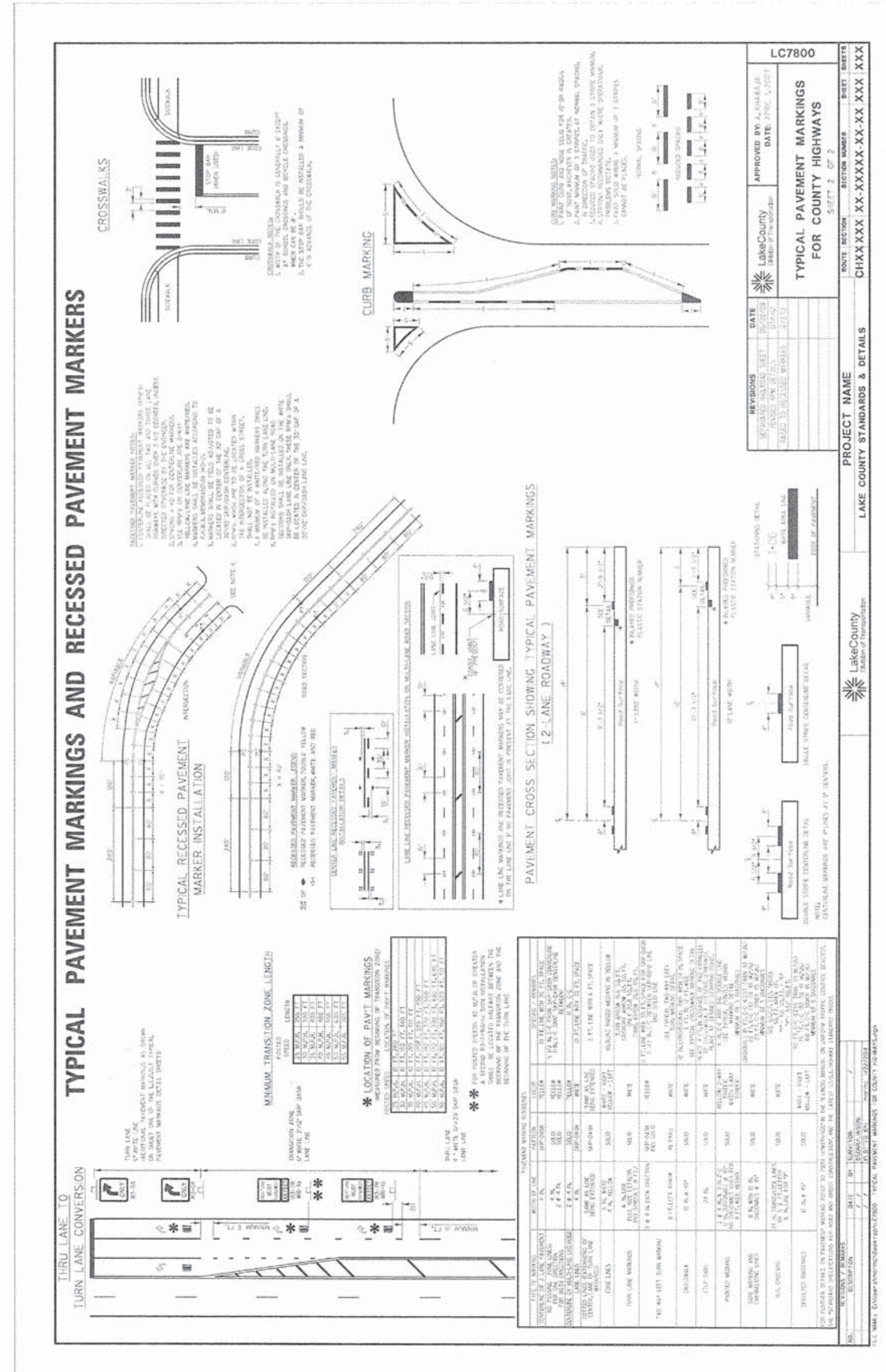

PENTABLE = ...\Lisle\Pentable\TransPen.tbl

PATRICK ENGINEERING INC. 4970 VARSITY DRIVE LISLE, IL 60532 patrickengineering.com	USER NAME = tkoeppen(Rdwy_Lisle)	DESIGNED -	REVISED -	STATE OF ILLINOIS DEPARTMENT OF TRANSPORTATION
	PLOT CONFIG= pdfNOLAYERSbw.pltcfg	DRAWN -	REVISED -	
	PLOT SCALE = 1:100	CHECKED -	REVISED -	
	PLOT DATE = 7/2/2014 11:54:50 PM	DATE - 6/30/2014	REVISED -	

WASHINGTON STREET FROM HARYAN WAY TO LAKE STREET
LAKE COUNTY DOT STANDARDS

SCALE:	SHEET NO.	STA.	TO STA.

F.A.U RTE.	SECTION	COUNTY	TOTAL SHEETS	SHEET NO.
187	11-00121-11-BR	LAKE	496	346
				61A63
FED. ROAD DIST. NO.	ILLINOIS	FED. AID PROJECT		

G:\LCDOT\21150.004\Drawings\shts\Stds\S_STD_LCDOT_LC7800.dgn

TYPICAL SHORT TERM PAVEMENT MARKINGS

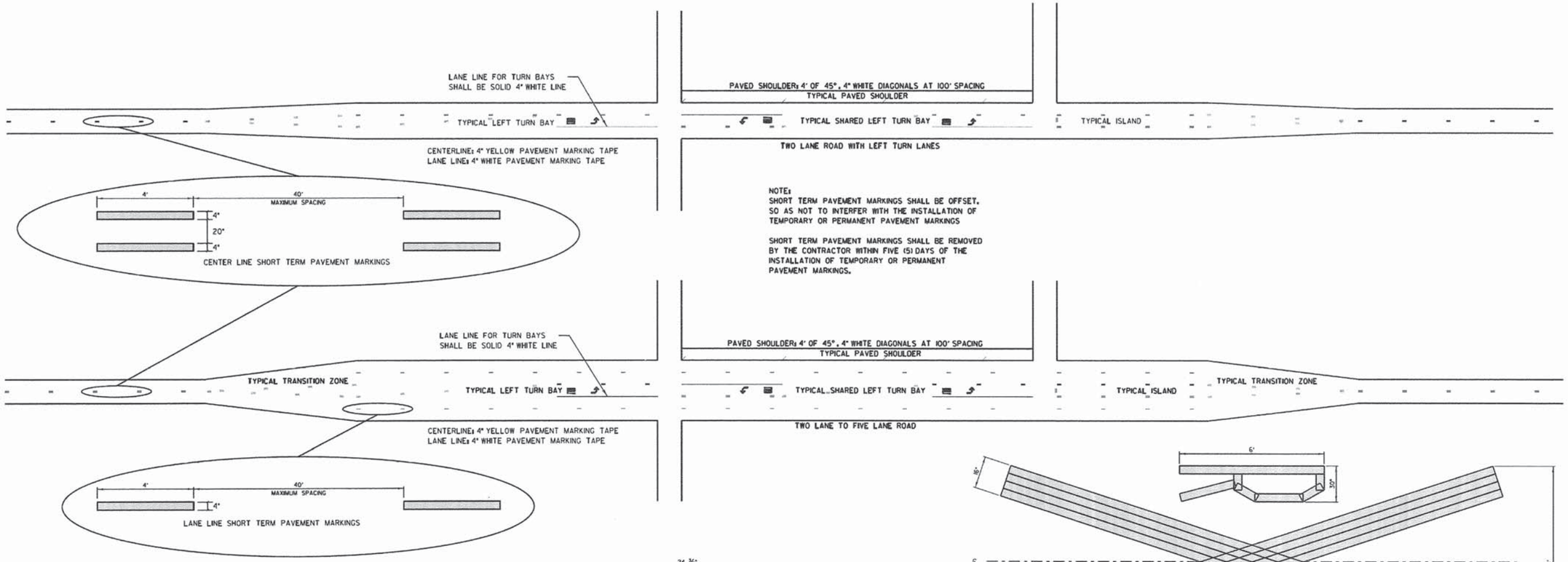

REVISIONS	DATE
REMOVE DUAL DIMENSIONS	2/18/08

LakeCounty
Division of Transportation

APPROVED BY: A. KHAWAJA
DATE: APRIL 1, 2007

SHORT TERM PAVEMENT MARKINGS

LC7802

REVISIONS / REMARKS					
NO.	DESCRIPTION	DATE	BY	SURVEYOR:	/
		/ /		DSGNR/LIAISON:	
		/ /		PLOTTED BY:	hdmgs 5/23/2011

LakeCounty
Division of Transportation

PROJECT NAME	ROUTE	SECTION	SECTION NUMBER	SHEET	SHEETS
LAKE COUNTY STANDARDS & DETAILS	CHXX	XXX	XX-XXXXX-XX-XX	XX	XX

FILE NAME: C:\Documents and Settings\hdmgs\My Documents\LCDOT DETAILS\LC7802 SHORT TERM PAVEMENT MARKINGS.dgn

PATRICK ENGINEERING
PATRICK ENGINEERING INC.
4970 VARSITY DRIVE
LISLE, IL 60532
patrickengineering.com

USER NAME = tkoeppen(Rdwy_Lisle)	DESIGNED -	REVISED -	
PLOT CONFIG= pdfNOLAYERSbw.pltcfg	DRAWN -	REVISED -	
PLOT SCALE = 1:100	CHECKED -	REVISED -	
PLOT DATE = 7/2/2014 11:55:10 PM	DATE - 6/30/2014	REVISED -	

STATE OF ILLINOIS
DEPARTMENT OF TRANSPORTATION

WASHINGTON STREET FROM HARYAN WAY TO LAKE STREET
LAKE COUNTY DOT STANDARDS

SCALE: | SHEET NO. | STA. | TO STA.

F.A.U RTE.	SECTION	COUNTY	TOTAL SHEETS	SHEET NO.
187	11-00121-11-BR	LAKE	496	347

61A63

FED. ROAD DIST. NO. | ILLINOIS | FED. AID PROJECT

PENTABLE = ...\Lisle\PenTable\TransPen.tbl

G:\LCDOT\21150.004\Drawings\shts\Stds\S_STD_LCDOT_LC7802.dgn

TYPICAL RAILROAD RELATED PAVEMENT MARKINGS

TYPICAL PLACEMENT OF R.R. WARNING SIGNS AND PAVEMENT MARKINGS ON COUNTY HIGHWAYS

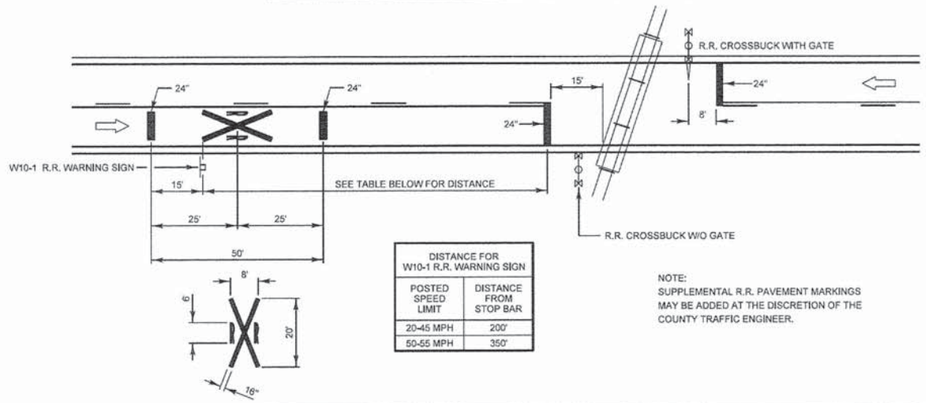

DISTANCE FOR W10-1 R.R. WARNING SIGN	
POSTED SPEED LIMIT	DISTANCE FROM STOP BAR
20-45 MPH	200'
50-55 MPH	350'

NOTE:
SUPPLEMENTAL R.R. PAVEMENT MARKINGS MAY BE ADDED AT THE DISCRETION OF THE COUNTY TRAFFIC ENGINEER.

PAVEMENT MARKINGS FOR R.R. CROSSINGS AT NON-SIGNALIZED INTERSECTIONS 81 FEET OR LESS

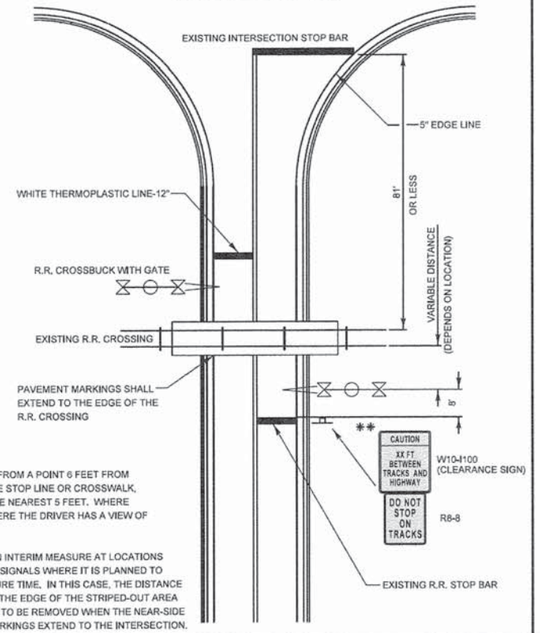

**
NOTE:
DISTANCE TO BE SHOWN ON SIGN IS MEASURED FROM A POINT 6 FEET FROM THE RAIL CLOSEST TO THE INTERSECTION TO THE STOP LINE OR CROSSWALK, WHICHEVER IS CLOSEST, ROUNDED DOWN TO THE NEAREST 5 FEET. WHERE THERE IS NO STOP LINE, MEASURE TO POINT WHERE THE DRIVER HAS A VIEW OF APPROACHING TRAFFIC.

THE CLEARANCE SIGN IS ALSO TO BE USED AS AN INTERIM MEASURE AT LOCATIONS WITH INTERCONNECTED INTERSECTION TRAFFIC SIGNALS WHERE IT IS PLANNED TO CHANGE THEM TO NEAR-SIDE SIGNALS AT A FUTURE TIME. IN THIS CASE, THE DISTANCE TO BE SHOWN ON THE SIGN IS MEASURED FROM THE EDGE OF THE STRIPED-OUT AREA INSTEAD OF 6-FEET FROM THE RAIL. THE SIGN IS TO BE REMOVED WHEN THE NEAR-SIDE SIGNALS ARE INSTALLED AND THE PAVEMENT MARKINGS EXTEND TO THE INTERSECTION.

PAVEMENT MARKINGS FOR R.R. CROSSINGS AT SIGNALIZED INTERSECTIONS 81 FEET OR LESS

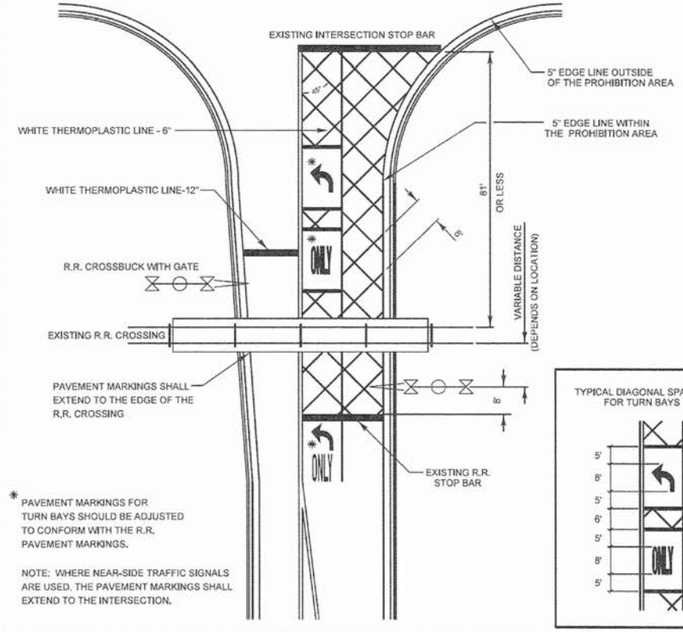

* PAVEMENT MARKINGS FOR TURN BAYS SHOULD BE ADJUSTED TO CONFORM WITH THE R.R. PAVEMENT MARKINGS.

NOTE: WHERE NEAR-SIDE TRAFFIC SIGNALS ARE USED, THE PAVEMENT MARKINGS SHALL EXTEND TO THE INTERSECTION.

TYPICAL DIAGONAL SPACING FOR TURN BAYS

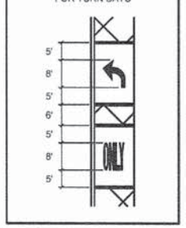

PAVEMENT MARKINGS FOR R.R. CROSSINGS AT SIGNALIZED INTERSECTIONS GREATER THAN 81 FEET - 300 FEET

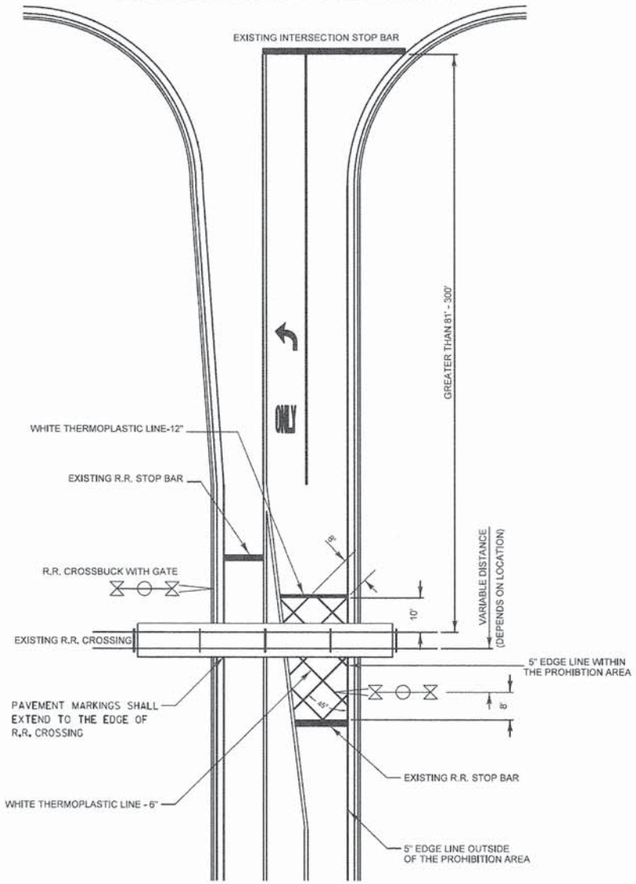

NOTE: DISTANCES GREATER THAN 300 FT MAY BE MARKED ACCORDING TO "TYPICAL PLACEMENT OF R.R. WARNING SIGNS AND PAVEMENT MARKINGS ON COUNTY HIGHWAYS".

REVISIONS	DATE
Separated Railroad Sheet	06/02/08
Reformat LCDOT Standard	07/15/10
Revised to IDOT DI Standard	07/1/12

LakeCounty Division of Transportation

APPROVED BY: A. KHAWAJA
DATE: June 2, 2008

TYPICAL PAVEMENT MARKINGS FOR RAILROAD CROSSINGS ON COUNTY HIGHWAYS

LC7803

REVISIONS / REMARKS					
NO.	DESCRIPTION	DATE	BY	SURVEYOR:	/
1	REVISED TO IDOT DI TYPICAL X-ING	6/12/12	DWK	DSGNR/LIAISON:	
		/ /		PLOTTED BY:	hddwk 7/2/2012

FILE NAME: C:\Documents and Settings\hddwk\Desktop\LC7803 TYPICAL PAVEMENT MARKINGS FOR RAILROAD CROSSINGS ON COUNTY HIGHWAYS.dgn

LakeCounty Division of Transportation

PROJECT NAME	ROUTE	SECTION	SECTION NUMBER	SHEET	SHEETS
LAKE COUNTY STANDARDS & DETAILS	CHXX	XXX	XX-XXXXX-XX-XX	XXX	XXX

PENTABLE = n:\Lisle\PenTable\TrenPen.tbl

PATRICK ENGINEERING
PATRICK ENGINEERING INC.
4970 VARSITY DRIVE
LISLE, IL 60532
patrickengineering.com

USER NAME = tkoeppen(Rdwy.Lisle)	DESIGNED -	REVISED -
PLOT CONFIG= pdfNOLAYERSbw.pltcfg	DRAWN -	REVISED -
PLOT SCALE = 1:100	CHECKED -	REVISED -
PLOT DATE = 7/2/2014 11:55:33 PM	DATE - 6/30/2014	REVISED -

STATE OF ILLINOIS
DEPARTMENT OF TRANSPORTATION

WASHINGTON STREET FROM HARYAN WAY TO LAKE STREET
LAKE COUNTY DOT STANDARDS

SCALE: SHEET NO. STA. TO STA.

F.A.U RTE.	SECTION	COUNTY	TOTAL SHEETS	SHEET NO.
187	11-00121-11-BR	LAKE	496	348
				61A63

FED. ROAD DIST. NO. | ILLINOIS | FED. AID PROJECT

D:\LCDOT\21150.004\Drawings\shts\Stds\S_STD_LCDOT_LC7803.dgn

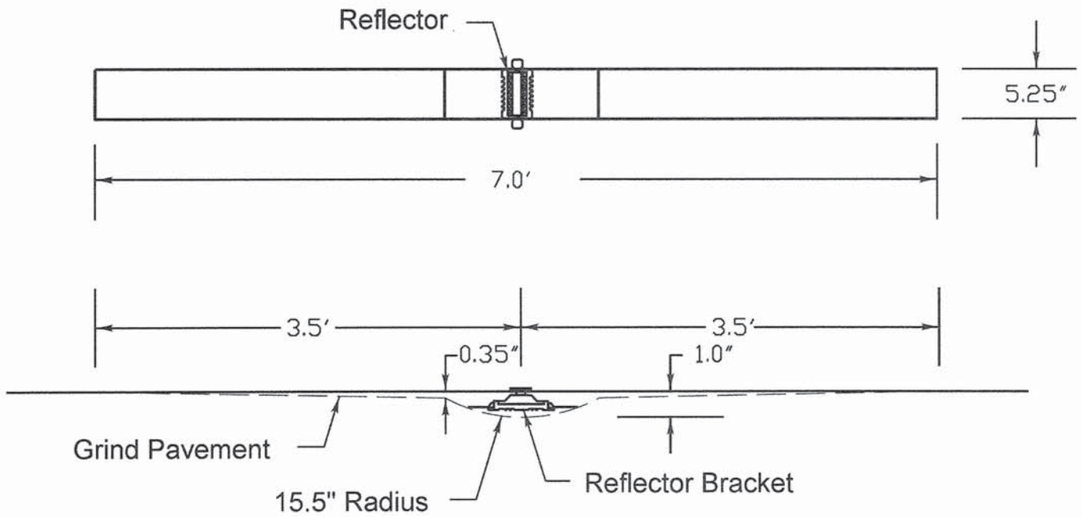

Notes

1. The reflective pavement marker lens shall be a 3M 190 series pavement marker or an approved equal.

2. The reflector bracket shall be made of a polycarbonate and shall be a MarkerOne Series R100 or an approved equal.

3. The adhesive used shall meet the requirements of AASHTO M237 specification for adhesives to be used in cementing asphalt surfaces.

4. Markers shall be placed at 40' intervals on lane lines and painted medians and 40' intervals on curves and approaching intersections as shown on LCDOT standard LC7800.

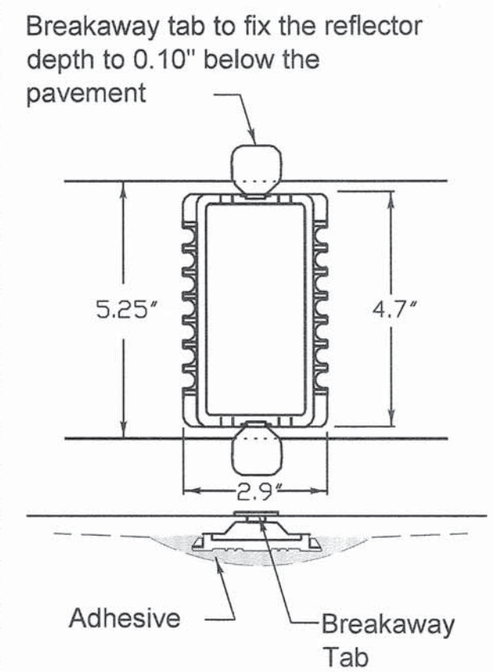

Reflector Bracket Detail

REVISIONS	DATE

LakeCounty
Division of Transportation

APPROVED BY: JN
DATE: 12/02/13

RECESSED REFLECTIVE PAVEMENT MARKER

LC7805

PATRICK ENGINEERING INC.
4970 VARSITY DRIVE
LISLE, IL 60532
patrickengineering.com

USER NAME = tkoepper(Rdwy_Lisle)	DESIGNED -	REVISED -	
PLOT CONFIG= pdfNOLAYERSbw.pltcfg	DRAWN -	REVISED -	
PLOT SCALE = 1:100	CHECKED -	REVISED -	
PLOT DATE = 7/2/2014 11:55:56 PM	DATE - 6/30/2014	REVISED -	

STATE OF ILLINOIS
DEPARTMENT OF TRANSPORTATION

WASHINGTON STREET FROM HARYAN WAY TO LAKE STREET
LAKE COUNTY DOT STANDARDS

SCALE: | SHEET NO. | STA. | TO STA.

F.A.U RTE.	SECTION	COUNTY	TOTAL SHEETS	SHEET NO.
187	11-00121-11-BR	LAKE	496	349
				61A63

FED. ROAD DIST. NO. | ILLINOIS | FED. AID PROJECT

PENTABLE = ...\Lisle\PenTable\TransPen.tbl

D:\LCDOT\211150.004\Drawings\shts\Stds\S_STD_LCDOT_LC7805.dgn

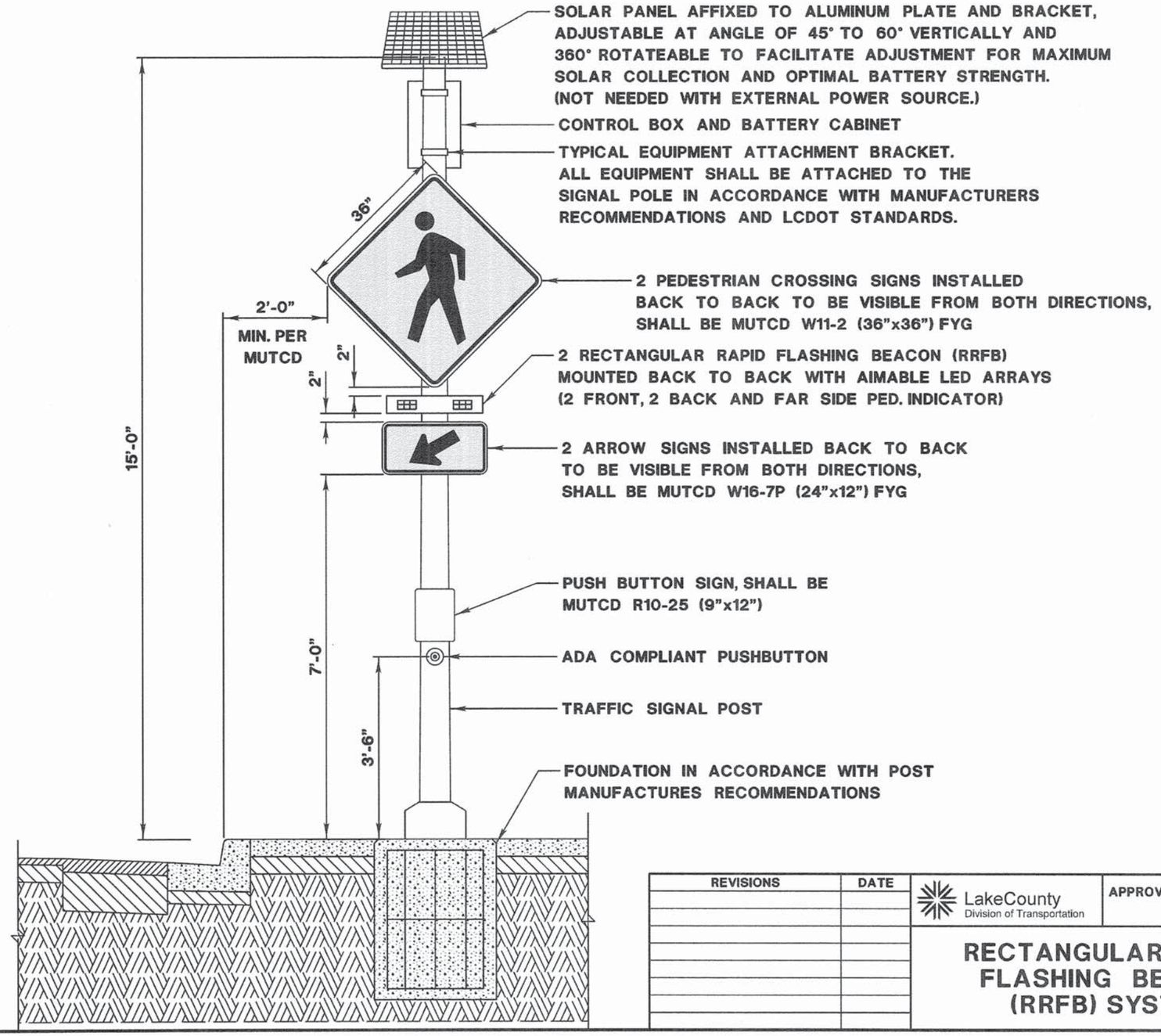

REVISIONS	DATE

LakeCounty
Division of Transportation

APPROVED BY: MGZ
DATE: 04/24/13

RECTANGULAR RAPID FLASHING BEACON (RRFB) SYSTEM

LC8502

PATRICK ENGINEERING INC.
4970 VARSITY DRIVE
LISLE, IL 60532
patrickengineering.com
PATRICK ENGINEERING

USER NAME = tkoeppen(Rdwy.Lisle)	DESIGNED -	REVISED -
PLOT CONFIG= pdfNOLAYERSbw.pltcfg	DRAWN -	REVISED -
PLOT SCALE = 1:100	CHECKED -	REVISED -
PLOT DATE = 7/2/2014 11:56:17 PM	DATE - 6/30/2014	REVISED -

STATE OF ILLINOIS
DEPARTMENT OF TRANSPORTATION

WASHINGTON STREET FROM HARYAN WAY TO LAKE STREET
LAKE COUNTY DOT STANDARDS

SCALE: | SHEET NO. | STA. | TO STA.

F.A.U RTE.	SECTION	COUNTY	TOTAL SHEETS	SHEET NO.
187	11-00121-11-BR	LAKE	496	350
				61A63

FED. ROAD DIST. NO. | ILLINOIS | FED. AID PROJECT

PENTABLE = ...\Lisle\PenTables\TransPen.tbl

G:\LCDOT\21150.004\Drawings\shts\Stds\S.STD.LCDOT.LC8502.dgn

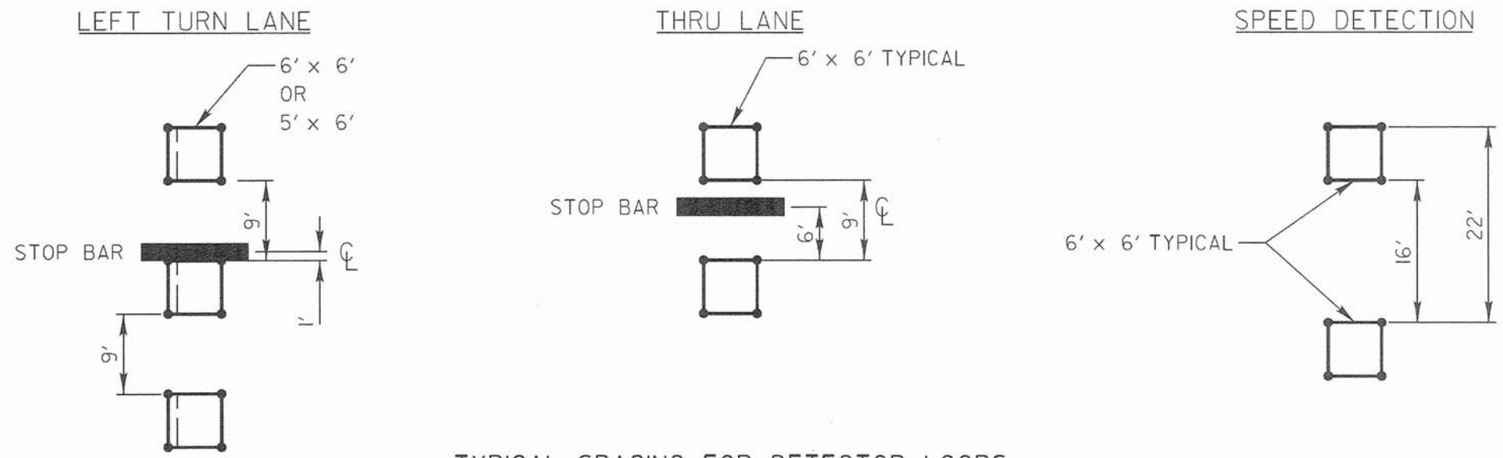

TYPICAL SPACING FOR DETECTOR LOOPS

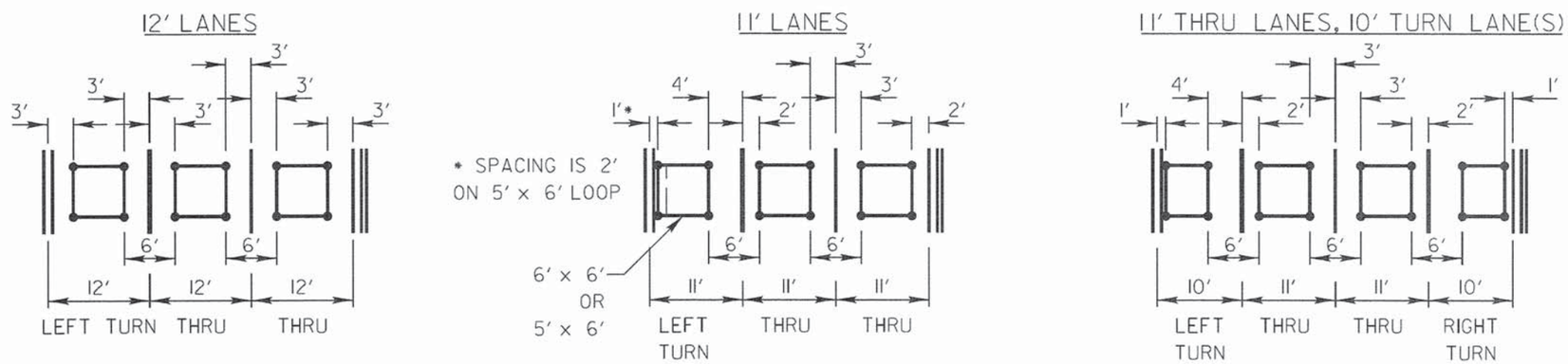

TYPICAL LATERAL PLACEMENT FOR DETECTOR LOOPS

REVISIONS	DATE

LakeCounty
Division of Transportation

APPROVED BY: A. KHAWAJA
DATE: APRIL 1, 2007

TYPICAL DETECTOR LOOP LAYOUTS

LC8600

PENTABLE = ...\Lisle\Pentable\TransPen.tbl

PATRICK ENGINEERING
PATRICK ENGINEERING INC.
4970 VARSITY DRIVE
LISLE, IL 60532
patrickengineering.com

USER NAME = tkoeppen(Rdwy_Lisle)	DESIGNED -	REVISED -
PLOT CONFIG= pdfNOLAYERSbw.pltcfg	DRAWN -	REVISED -
PLOT SCALE = 1:100	CHECKED -	REVISED -
PLOT DATE = 7/2/2014 11:56:39 PM	DATE - 6/30/2014	REVISED -

STATE OF ILLINOIS
DEPARTMENT OF TRANSPORTATION

WASHINGTON STREET FROM HARYAN WAY TO LAKE STREET
LAKE COUNTY DOT STANDARDS

SCALE: | SHEET NO. | STA. | TO STA.

F.A.U RTE.	SECTION	COUNTY	TOTAL SHEETS	SHEET NO.
187	11-00121-11-BR	LAKE	496	351
				61A63

FED. ROAD DIST. NO. | ILLINOIS | FED. AID PROJECT

G:\LCDOT\21150.004\Drawings\shts\Stds\S_STD_LCDOT_LC8600.dgn

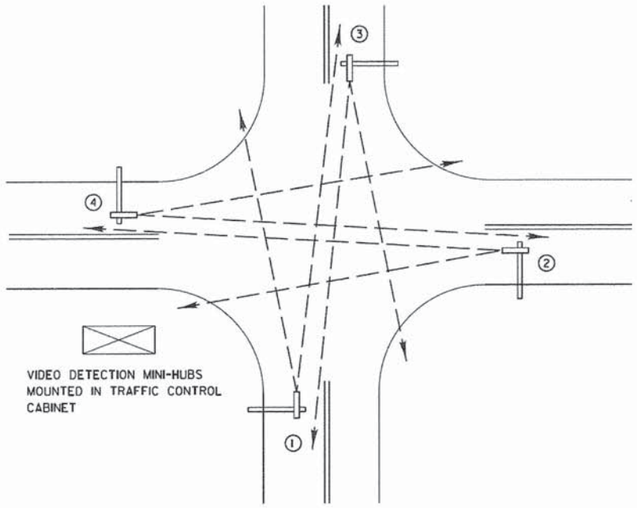

TYPICAL VIDEO VEHICLE DETECTION SYSTEM

(NOT TO SCALE)

(4) MACHINE VISION PROCESSOR ASSEMBLIES AND BRACKETS ① ② ③ ④
POWER CABLE TO EACH MACHINE VISION PROCESSOR (24 VAC)

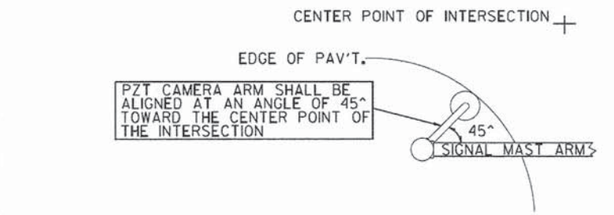

IMAGE SENSOR MOUNTING DETAILS

(NO SCALE)

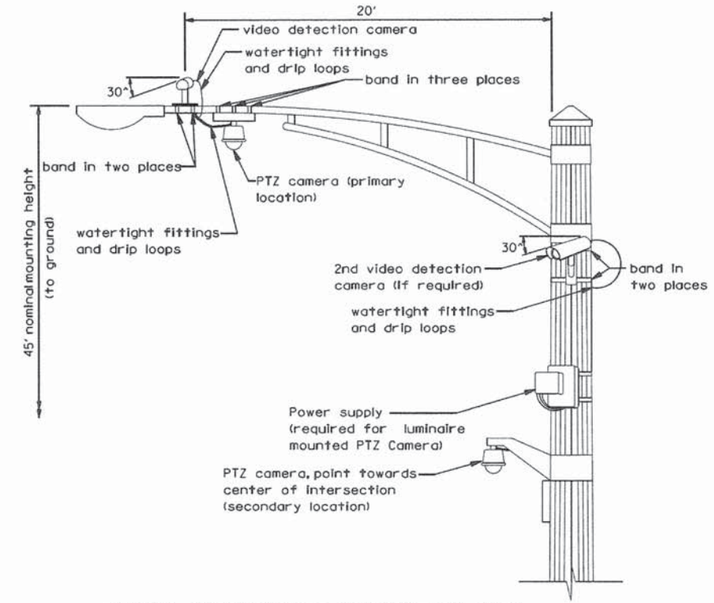

VIDEO DETECTION CAMERA(S) AND DOME (PTZ) CAMERA MOUNTING DETAIL

(NOT TO SCALE)

NOTES FOR SINGLE, DUAL AND MULTIPLE MVP MOUNTING:
- MOUNT LUMINAIRE MOUNTING BRACKET AS HIGH AS POSSIBLE.
- AIM BRACKET TOWARD DIRECTION OF TRAFFIC TO BE DETECTED.
- MOUNT MACHINE VISION PROCESSOR AIMING DOWN AT 30 DEGREE ANGLE.

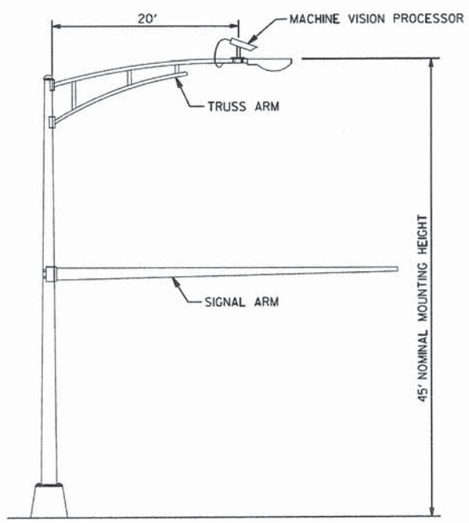

COMBINATION MAST ARM ASSEMBLY AND POLE DIMENSIONS

(NOT TO SCALE)

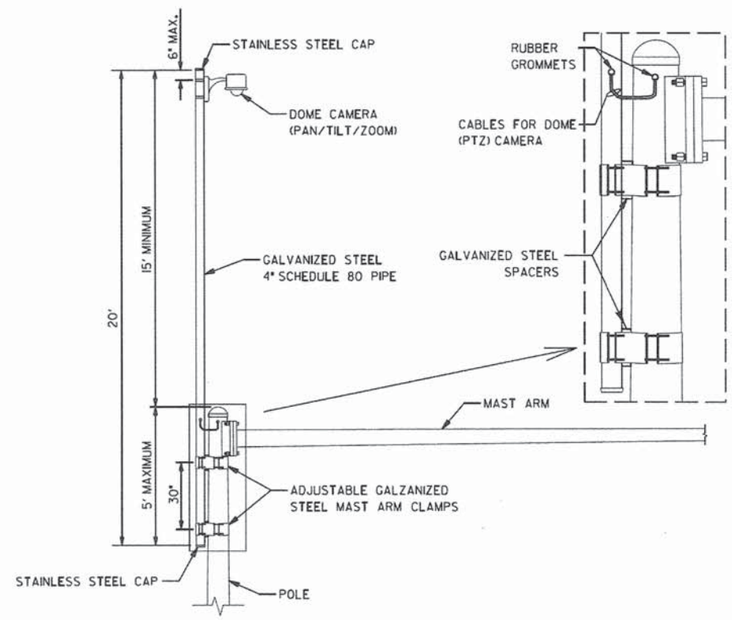

CAMERA MOUNTING ASSEMBLY DETAIL

(NOT TO SCALE)

NOTES:
- THE MAST ARM IS TAPERED.
- INSTALL EXTENSION POLE VERTICAL AND PLUM BY MODIFYING/INSTALLING BRACKETS AS NECESSARY. ADDITIONAL SPACERS REQUIRED ARE INCLUDED IN THE COST OF THE CAMERA MOUNTING ASSEMBLY OF THE TYPE SPECIFIED.
- SPACERS ARE TO BE INTEGRATED OR MANUFACTURED WITH THE MAST ARM BRACKETS

REVISIONS	DATE
Mounting Details Revised	05/01/08
2nd Camera Locat. added	01/14/09
Mast Arm Taper Detail	06/01/12

LakeCounty Division of Transportation

APPROVED BY: A. KHAWAJA
DATE: APRIL 1, 2007

VIDEO DETECTION DETAILS

LC8900

REVISIONS / REMARKS					
NO.	DESCRIPTION	DATE	BY	SURVEYOR:	/
		/ /		DSGNR/LIAISON:	
		/ /		PLOTTED BY:	hdrmc 6/7/2012

FILE NAME: C:\Documents and Settings\hdrmc\Desktop\LC8900.DGN

LakeCounty Division of Transportation

PROJECT NAME	ROUTE	SECTION	SECTION NUMBER	SHEET	SHEETS
LAKE COUNTY STANDARDS & DETAILS	CHXX	XXX	XX-XXXXX-XX-XX	XXX	XXX

PENTABLE = ...\Lisle\Pentable\TransPen.tbl

PATRICK ENGINEERING
PATRICK ENGINEERING INC.
4970 VARSITY DRIVE
LISLE, IL 60532
patrickengineering.com

USER NAME = tkoeppen(Rdwy.Lisle)	DESIGNED -	REVISED -	
PLOT CONFIG= pdfNOLAYERSbw.pltcfg	DRAWN -	REVISED -	
PLOT SCALE = 1:100	CHECKED -	REVISED -	
PLOT DATE = 7/2/2014 11:56:58 PM	DATE - 6/30/2014	REVISED -	

STATE OF ILLINOIS
DEPARTMENT OF TRANSPORTATION

WASHINGTON STREET FROM HARYAN WAY TO LAKE STREET
LAKE COUNTY DOT STANDARDS

SCALE: SHEET NO. STA. TO STA.

F.A.U RTE.	SECTION	COUNTY	TOTAL SHEETS	SHEET NO.
187	11-00121-11-BR	LAKE	496	352
				61A63

FED. ROAD DIST. NO. | ILLINOIS | FED. AID PROJECT

G:\LCDOT\21150.004\Drawings\shts\Stds\S_STD_LCDOT_LC8900.dgn

		STAGE 1	STAGE 2	STAGE 3
102+00.00	UNSUITABLE	0.00	0.00	10.74
	EXCAVATION	0.00	0.00	0.00
	EMBANKMENT	0.00	0.00	7.02

ALL UNITS ARE SQ FT

LEGEND

- TEMPORARY PAVEMENT BY OTHERS
- STRUCTURAL EXCAVATION
- BRACED EXCAVATION

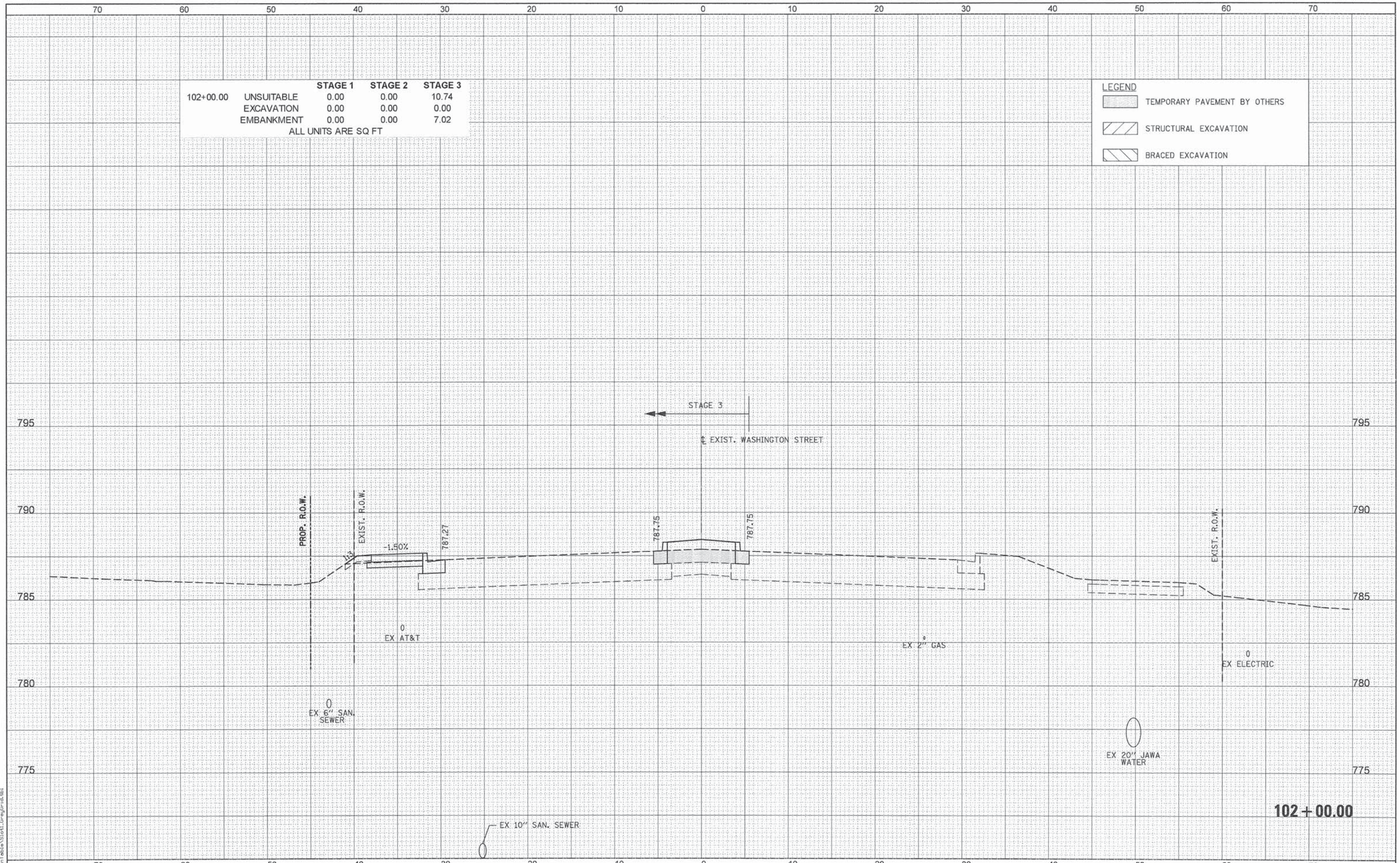

FINAL SURVEY	BY	DATE
SURVEYED		
PLOTTED		
TEMPLATE		
AREAS		
AREAS CHECKED		
NOTE BOOK		
NO.		

ORIGINAL SURVEY	BY	DATE
SURVEYED		
PLOTTED		
TEMPLATE		
AREAS		
AREAS CHECKED		
NOTE BOOK		
NO.		

PENTABLE = ...\PenTable\Slot1_Gray_Grid.tbl

Q:\LCDOT\21150_004\Drawings\shts\Xsec\S_XS_Wash_21150_004.dgn

PATRICK ENGINEERING
PATRICK ENGINEERING INC.
4970 VARSITY DRIVE
LISLE, IL 60532
patrickengineering.com

USER NAME = tkoeppen(Rdwy_Lisle)	DESIGNED - MJV	REVISED -	
	DRAWN - MJV	REVISED -	
PLOT SCALE = 10.0000 ' / in.	CHECKED - MJP	REVISED -	
PLOT DATE = 7/3/2014	DATE - 6/30/2014	REVISED -	

STATE OF ILLINOIS
DEPARTMENT OF TRANSPORTATION

WASHINGTON STREET FROM HARYAN WAY TO LAKE STREET
WASHINGTON STREET CROSS SECTIONS

SCALE: | SHEET NO. OF SHEETS | STA. 102+00.00 TO STA. 102+00.00

F.A.U RTE.	SECTION	COUNTY	TOTAL SHEETS	SHEET NO.
187	11-00121-11-BR	LAKE	496	353

CONTRACT NO. 61A63

ILLINOIS FED. AID PROJECT

		STAGE 1	STAGE 2	STAGE 3
102+50.00	UNSUITABLE	0.00	0.00	11.19
	EXCAVATION	0.00	0.00	0.00
	EMBANKMENT	0.00	0.00	7.49

ALL UNITS ARE SQ FT

LEGEND

- TEMPORARY PAVEMENT BY OTHERS
- STRUCTURAL EXCAVATION
- BRACED EXCAVATION

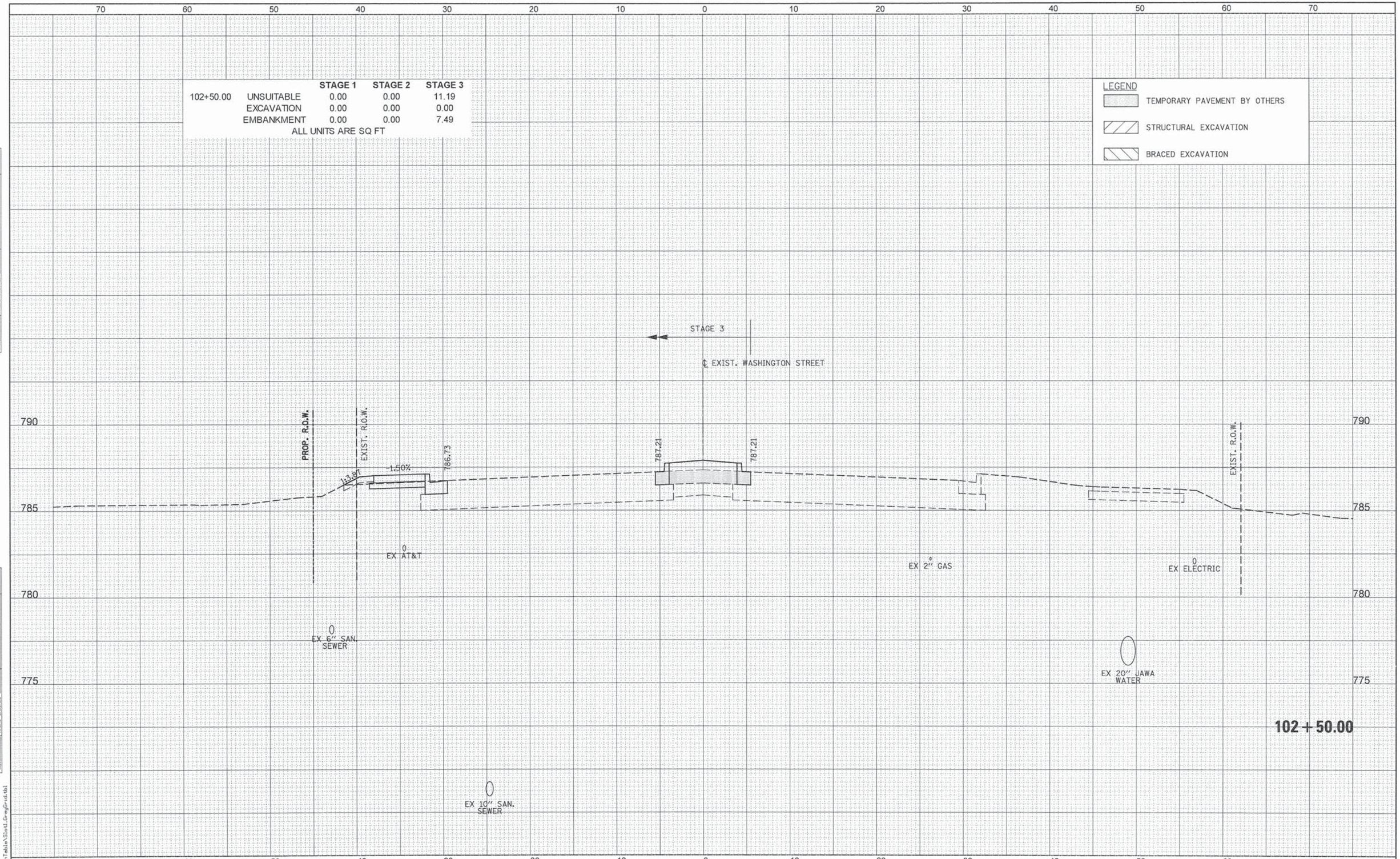

FINAL SURVEY	BY	DATE
SURVEYED		
PLOTTED		
TEMPLATE		
AREAS		
AREAS CHECKED		
NOTE BOOK		
NO.		

ORIGINAL SURVEY	BY	DATE
SURVEYED		
PLOTTED		
TEMPLATE		
AREAS		
AREAS CHECKED		
NOTE BOOK		
NO.		

PATRICK ENGINEERING INC.
4970 VARSITY DRIVE
LISLE, IL 60532
patrickengineering.com

USER NAME = tkoepper(Rdwy_Lisle)	DESIGNED - MJV	REVISED -	
	DRAWN - MJV	REVISED -	
PLOT SCALE = 10.0000 ' / in.	CHECKED - MJP	REVISED -	
PLOT DATE = 7/3/2014	DATE - 6/30/2014	REVISED -	

STATE OF ILLINOIS
DEPARTMENT OF TRANSPORTATION

WASHINGTON STREET FROM HARYAN WAY TO LAKE STREET
WASHINGTON STREET CROSS SECTIONS

SCALE: | SHEET NO. OF SHEETS | STA. 102+50.00 TO STA. 102+50.00

F.A.U RTE.	SECTION	COUNTY	TOTAL SHEETS	SHEET NO.
187	11-00121-11-BR	LAKE	496	354

CONTRACT NO. 61A63

ILLINOIS FED. AID PROJECT

PENTABLE = ...\PenTables\Slot1.CrmgGrid.tbl

G:\LCDOT\21150.004\Drawings\shts\Xsec\S_XS_Wash_21150.004.dgn

		STAGE 1	STAGE 2	STAGE 3
103+18.77	UNSUITABLE	0.00	0.00	18.73
	EXCAVATION	0.00	0.00	0.00
	EMBANKMENT	0.00	0.00	13.84

ALL UNITS ARE SQ FT

LEGEND

- TEMPORARY PAVEMENT BY OTHERS
- STRUCTURAL EXCAVATION
- BRACED EXCAVATION

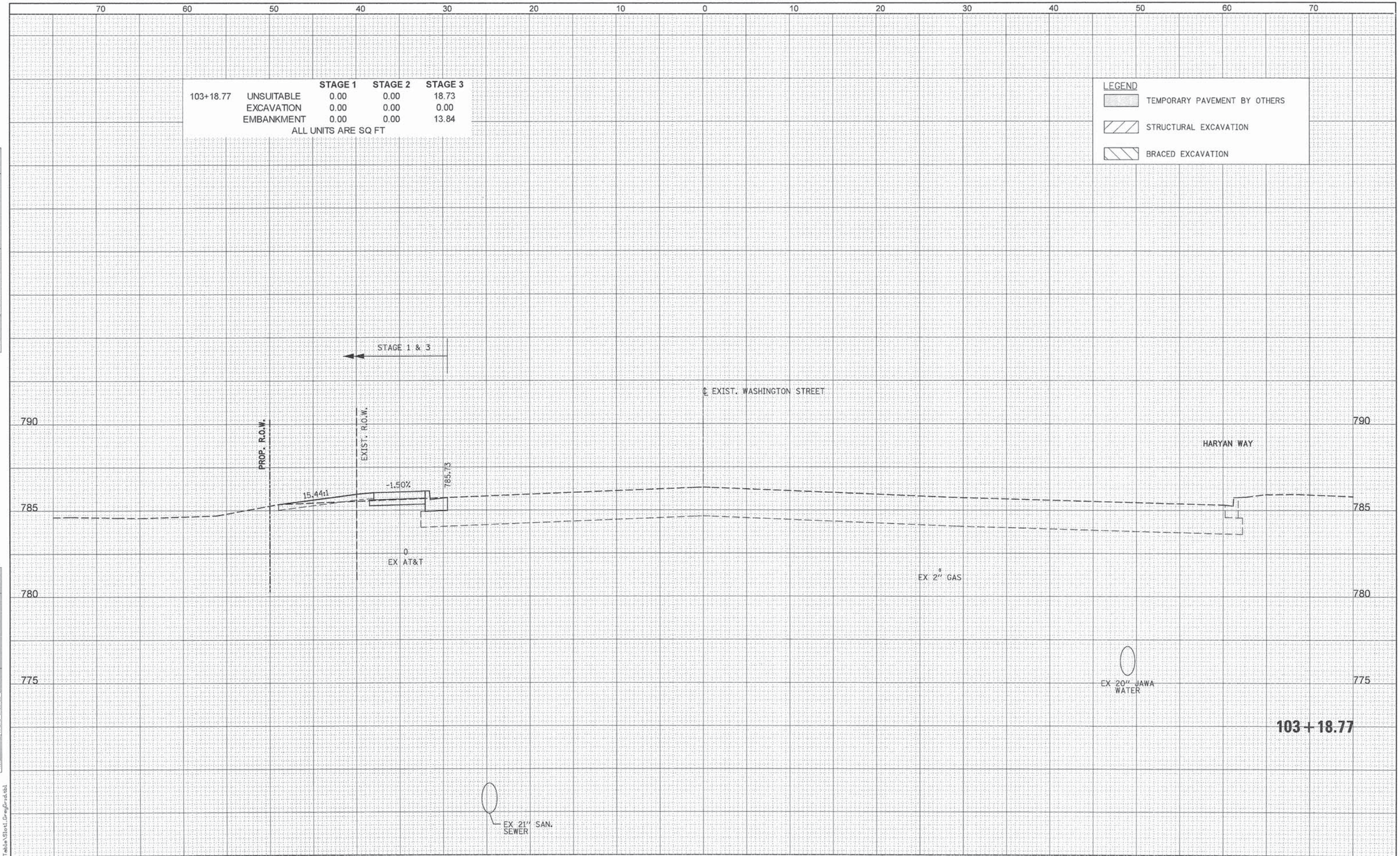

FINAL SURVEY	BY	DATE
SURVEYED		
PLOTTED		
TEMPLATE		
AREAS		
AREAS CHECKED		
NOTE BOOK		
NO.		

ORIGINAL SURVEY	BY	DATE
SURVEYED		
PLOTTED		
TEMPLATE		
AREAS		
AREAS CHECKED		
NOTE BOOK		
NO.		

PATRICK ENGINEERING INC.
4970 VARSITY DRIVE
LISLE, IL 60532
patrickengineering.com
PATRICK ENGINEERING

USER NAME = tkoeppen(Rdwy_Lisle)	DESIGNED - MJV	REVISED -	
	DRAWN - MJV	REVISED -	
PLOT SCALE = 10.0000 ' / in.	CHECKED - MJP	REVISED -	
PLOT DATE = 7/3/2014	DATE - 6/30/2014	REVISED -	

STATE OF ILLINOIS
DEPARTMENT OF TRANSPORTATION

WASHINGTON STREET FROM HARYAN WAY TO LAKE STREET
WASHINGTON STREET CROSS SECTIONS

SCALE: | SHEET NO. OF SHEETS | STA. 103+18.77 TO STA. 103+18.77

F.A.U RTE.	SECTION	COUNTY	TOTAL SHEETS	SHEET NO.
187	11-00121-11-BR	LAKE	496	355

CONTRACT NO. 61A63

ILLINOIS FED. AID PROJECT

PENTABLE = ...\PenTable\Slot1_GrayGrid.tbl

G:\LCDOT\21150_004\Drawings\shts\Xsec\S_XS_Wash_21150_004.dgn

		STAGE 1	STAGE 2	STAGE 3
104+00.00	UNSUITABLE	0.00	59.95	16.81
	EXCAVATION	0.00	0.00	0.00
	EMBANKMENT	0.00	34.43	12.71

ALL UNITS ARE SQ FT

LEGEND

- TEMPORARY PAVEMENT BY OTHERS
- STRUCTURAL EXCAVATION
- BRACED EXCAVATION

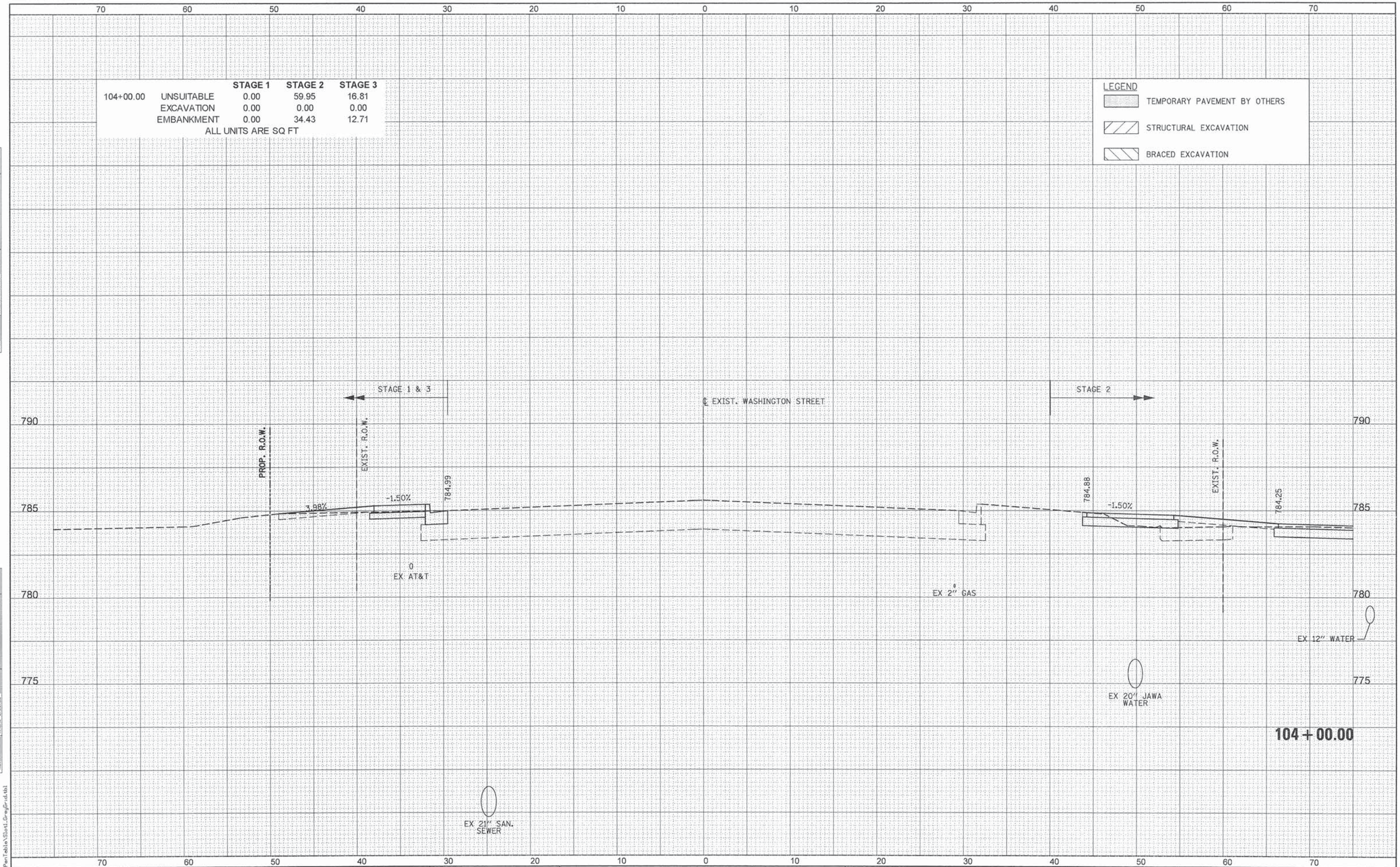

FINAL SURVEY		BY	DATE
NOTE BOOK	SURVEYED		
	PLOTTED		
	TEMPLATE		
	AREAS		
NO.	AREAS CHECKED		

ORIGINAL SURVEY		BY	DATE
NOTE BOOK	SURVEYED		
	PLOTTED		
	TEMPLATE		
	AREAS		
NO.	AREAS CHECKED		

PENTABLE = ...\PenTable\Slot1_GrayGrid.tbl

PATRICK ENGINEERING INC.
4970 VARSITY DRIVE
LISLE, IL 60532
patrickengineering.com
PATRICK ENGINEERING

USER NAME = tkoeppen(Rdwy_Lisle)	DESIGNED - MJV	REVISED -	
	DRAWN - MJV	REVISED -	
PLOT SCALE = 10.0000 ' / in.	CHECKED - MJP	REVISED -	
PLOT DATE = 7/3/2014	DATE - 6/30/2014	REVISED -	

STATE OF ILLINOIS
DEPARTMENT OF TRANSPORTATION

WASHINGTON STREET FROM HARYAN WAY TO LAKE STREET
WASHINGTON STREET CROSS SECTIONS

SCALE: | SHEET NO. OF SHEETS | STA. 104+00.00 TO STA. 104+00.00

F.A.U RTE.	SECTION	COUNTY	TOTAL SHEETS	SHEET NO.
187	11-00121-11-BR	LAKE	496	356

CONTRACT NO. 61A63

ILLINOIS FED. AID PROJECT

G:\LCDOT\21150_004\Drawings\shts\Xsec\S_XS_Wash_21150_004.dgn

		STAGE 1	STAGE 2	STAGE 3
104+50.00	UNSUITABLE	0.00	32.94	16.51
	EXCAVATION	0.00	0.00	0.00
	EMBANKMENT	0.00	43.26	10.28

ALL UNITS ARE SQ FT

LEGEND

- TEMPORARY PAVEMENT BY OTHERS
- STRUCTURAL EXCAVATION
- BRACED EXCAVATION

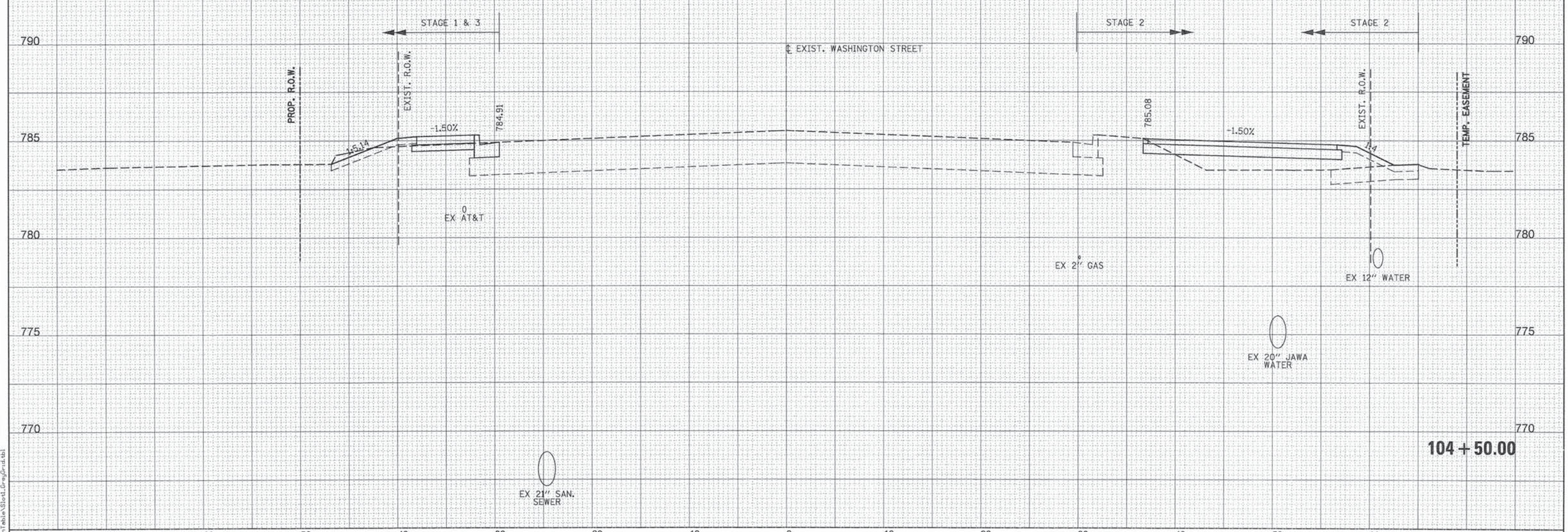

FINAL SURVEY	BY	DATE
SURVEYED		
PLOTTED		
TEMPLATE		
AREAS		
AREAS CHECKED		
NOTE BOOK		
NO.		

ORIGINAL SURVEY	BY	DATE
SURVEYED		
PLOTTED		
TEMPLATE		
AREAS		
AREAS CHECKED		
NOTE BOOK		
NO.		

PENTABLE = ...\Pentable\Stet1_Gray_Grid.tbl

PATRICK ENGINEERING
PATRICK ENGINEERING INC.
4970 VARSITY DRIVE
LISLE, IL 60532
patrickengineering.com

USER NAME = tkoeppen(Rdwy_Lisle)	DESIGNED - MJV	REVISED -	
	DRAWN - MJV	REVISED -	
PLOT SCALE = 10.0000 ' / in.	CHECKED - MJP	REVISED -	
PLOT DATE = 7/3/2014	DATE - 6/30/2014	REVISED -	

STATE OF ILLINOIS
DEPARTMENT OF TRANSPORTATION

WASHINGTON STREET FROM HARYAN WAY TO LAKE STREET
WASHINGTON STREET CROSS SECTIONS

SCALE: | SHEET NO. OF SHEETS | STA. 104+50.00 TO STA. 104+50.00

F.A.U RTE.	SECTION	COUNTY	TOTAL SHEETS	SHEET NO.
187	11-00121-11-BR	LAKE	496	357

CONTRACT NO. 61A63

ILLINOIS FED. AID PROJECT

G:\LCDOT\21150_004\Drawings\shts\Xsec\S_XS_Wash_21150_004.dgn

		STAGE 1	STAGE 2	STAGE 3
105+00.00	UNSUITABLE	0.00	56.15	17.85
	EXCAVATION	0.00	32.40	0.00
	EMBANKMENT	0.00	80.56	29.97

ALL UNITS ARE SQ FT

LEGEND

- TEMPORARY PAVEMENT BY OTHERS
- STRUCTURAL EXCAVATION
- BRACED EXCAVATION

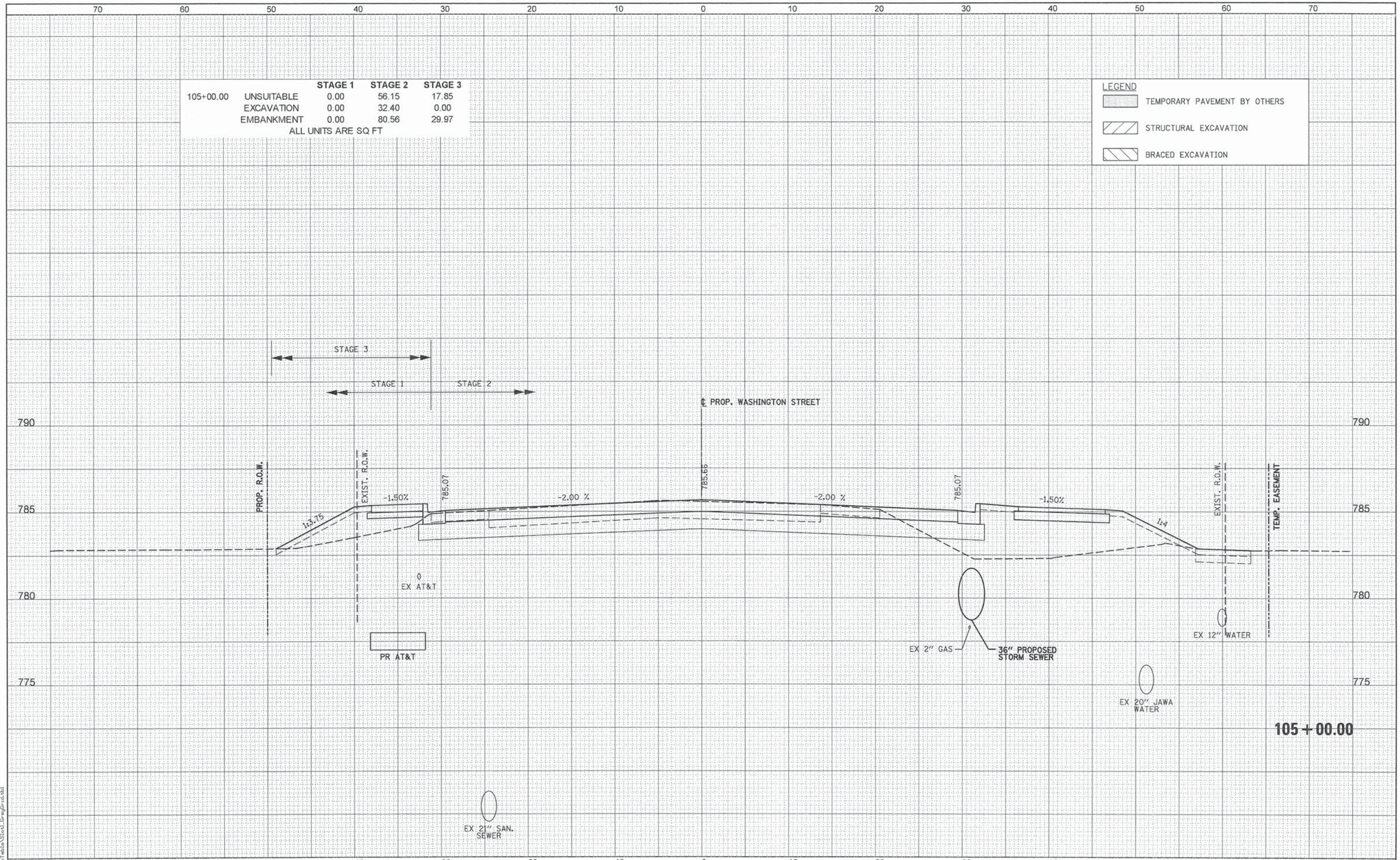

FINAL SURVEY		BY	DATE
NOTE BOOK	SURVEYED		
	PLOTTED		
	TEMPLATE		
	AREAS		
NO.	AREAS CHECKED		

ORIGINAL SURVEY		BY	DATE
NOTE BOOK	SURVEYED		
	PLOTTED		
	TEMPLATE		
	AREAS		
NO.	AREAS CHECKED		

PATRICK ENGINEERING INC.
4970 VARSITY DRIVE
LISLE, IL 60532
patrickengineering.com

USER NAME = tkoeppen(Rdwy_Lisle)	DESIGNED - MJV	REVISED -	
	DRAWN - MJV	REVISED -	
PLOT SCALE = 10.0000 ' / in.	CHECKED - MJP	REVISED -	
PLOT DATE = 7/3/2014	DATE - 6/30/2014	REVISED -	

STATE OF ILLINOIS
DEPARTMENT OF TRANSPORTATION

WASHINGTON STREET FROM HARYAN WAY TO LAKE STREET
WASHINGTON STREET CROSS SECTIONS

SCALE: | SHEET NO. OF SHEETS | STA. 105+00.00 TO STA. 105+00.00

F.A.U RTE.	SECTION	COUNTY	TOTAL SHEETS	SHEET NO.
187	11-00121-11-BR	LAKE	496	358

CONTRACT NO. 61A63

ILLINOIS FED. AID PROJECT

PENTABLE = ...\PenTables\Slot1_GrayGrid.tbl

G:\LCDOT\21150_004\Drawings\shts\Xsec\S_XS_Wash_21150_004.dgn

		STAGE 1	STAGE 2	STAGE 3
105+50.00	UNSUITABLE	0.00	79.27	0.00
	EXCAVATION	0.00	16.54	0.00
	EMBANKMENT	0.00	192.49	0.00

ALL UNITS ARE SQ FT

LEGEND

- TEMPORARY PAVEMENT BY OTHERS
- STRUCTURAL EXCAVATION
- BRACED EXCAVATION

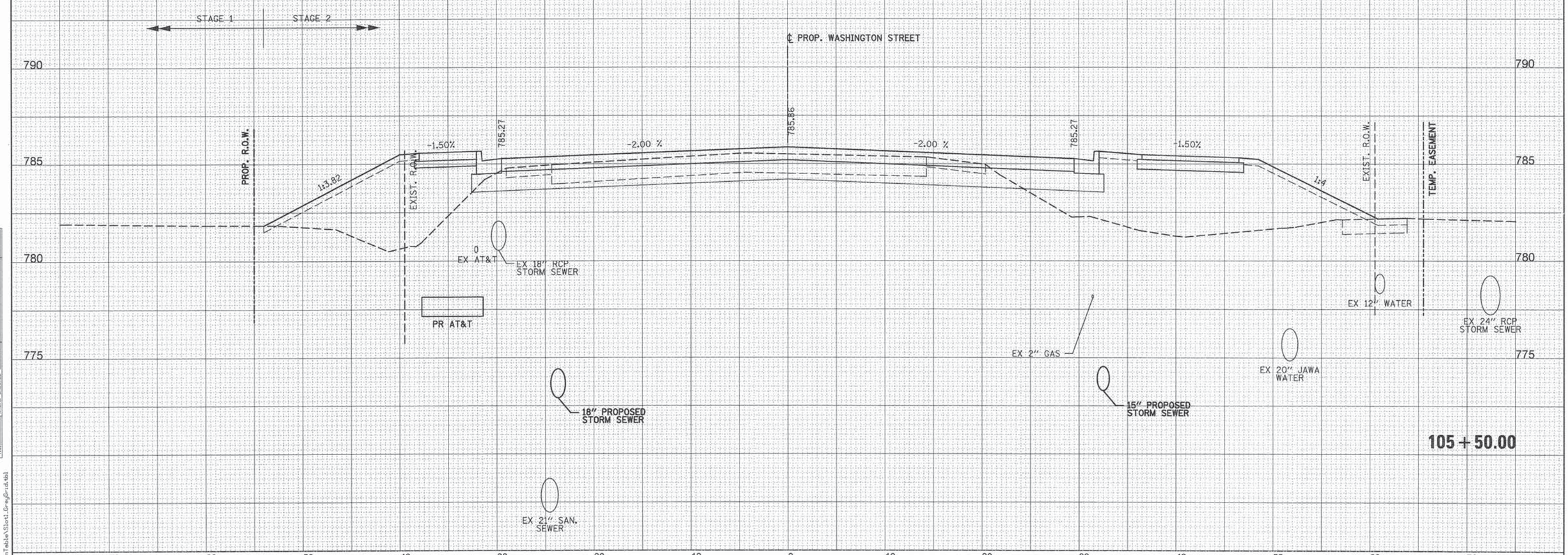

FINAL SURVEY	BY	DATE
SURVEYED		
PLOTTED		
TEMPLATE		
AREAS		
AREAS CHECKED		
NOTE BOOK		
NO.		

ORIGINAL SURVEY	BY	DATE
SURVEYED		
PLOTTED		
TEMPLATE		
AREAS		
AREAS CHECKED		
NOTE BOOK		
NO.		

PENTABLE = ...\PenTable\Slot1_GrayGrid.tbl

PATRICK ENGINEERING
PATRICK ENGINEERING INC.
4970 VARSITY DRIVE
LISLE, IL 60532
patrickengineering.com

USER NAME = tkoeppen(Rdwy_Lisle)	DESIGNED - MJV	REVISED -	
	DRAWN - MJV	REVISED -	
PLOT SCALE = 10.0000 ' / in.	CHECKED - MJP	REVISED -	
PLOT DATE = 7/3/2014	DATE - 6/30/2014	REVISED -	

STATE OF ILLINOIS
DEPARTMENT OF TRANSPORTATION

WASHINGTON STREET FROM HARYAN WAY TO LAKE STREET
WASHINGTON STREET CROSS SECTIONS

SCALE: | SHEET NO. OF SHEETS | STA. 105+50.00 TO STA. 105+50.00

F.A.U RTE.	SECTION	COUNTY	TOTAL SHEETS	SHEET NO.
187	11-00121-11-BR	LAKE	496	359

CONTRACT NO. 61A63

ILLINOIS FED. AID PROJECT

G:\LCDOT\21150.004\Drawings\shts\Xsec\S_XS_Wash_21150.004.dgn

		STAGE 1	STAGE 2	STAGE 3
105+58.58	UNSUITABLE	0.00	82.43	0.00
	EXCAVATION	0.00	17.24	0.00
	EMBANKMENT	0.00	87.07	0.00

ALL UNITS ARE SQ FT

LEGEND

- TEMPORARY PAVEMENT BY OTHERS
- STRUCTURAL EXCAVATION
- BRACED EXCAVATION

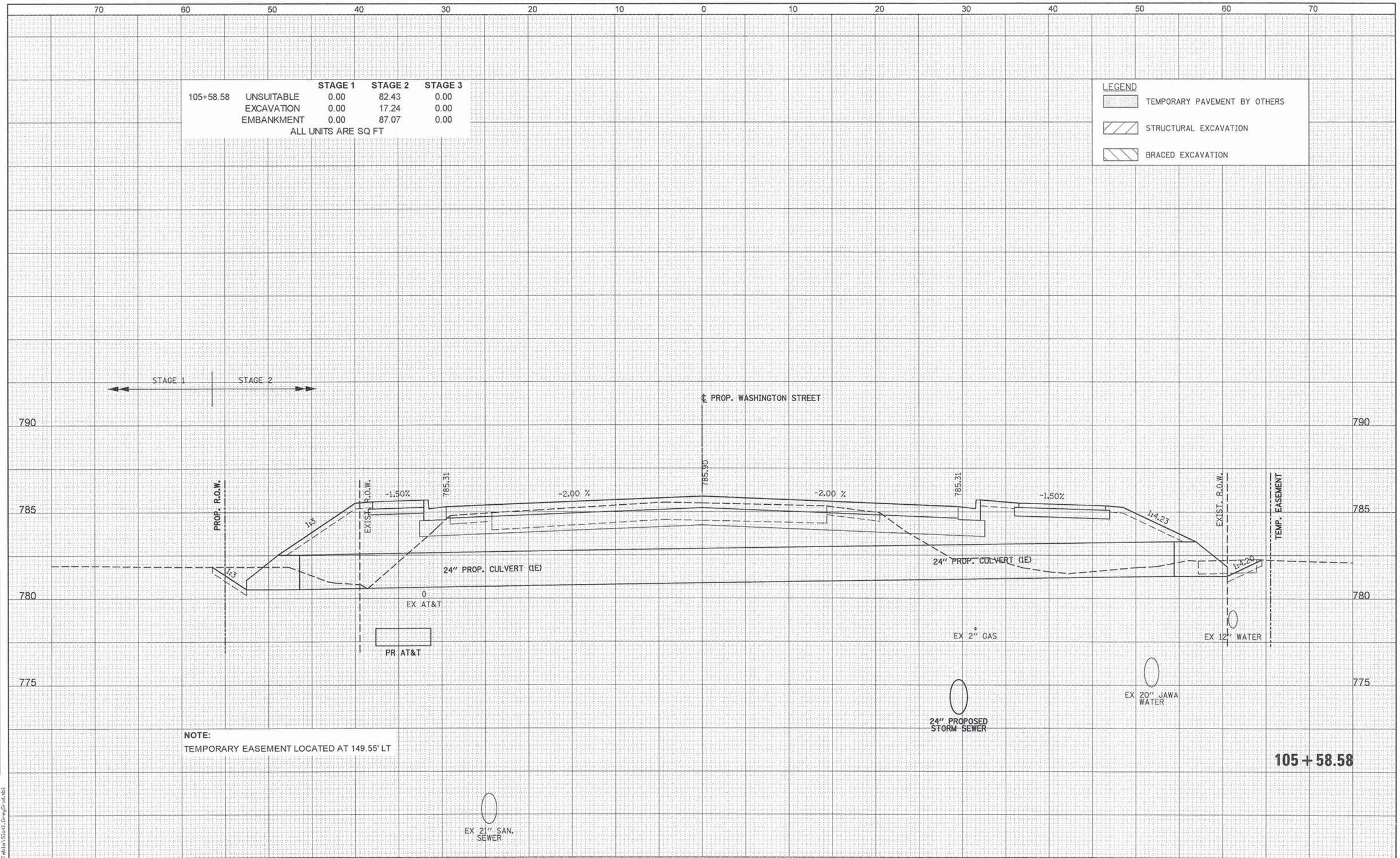

NOTE:
TEMPORARY EASEMENT LOCATED AT 149.55' LT

FINAL SURVEY	BY	DATE
SURVEYED		
PLOTTED		
TEMPLATE		
AREAS		
AREAS CHECKED		
NOTE BOOK		
NO.		

ORIGINAL SURVEY	BY	DATE
SURVEYED		
PLOTTED		
TEMPLATE		
AREAS		
AREAS CHECKED		
NOTE BOOK		
NO.		

PATRICK ENGINEERING INC.
4970 VARSITY DRIVE
LISLE, IL 60532
patrickengineering.com

USER NAME = tkoeppen(Rdwy.Lisle)	DESIGNED - MJV	REVISED -	
	DRAWN - MJV	REVISED -	
PLOT SCALE = 10.0000 ' / in.	CHECKED - MJP	REVISED -	
PLOT DATE = 7/3/2014	DATE - 6/30/2014	REVISED -	

STATE OF ILLINOIS
DEPARTMENT OF TRANSPORTATION

WASHINGTON STREET FROM HARYAN WAY TO LAKE STREET
WASHINGTON STREET CROSS SECTIONS

SCALE: | SHEET NO. OF SHEETS | STA. 105+58.58 TO STA. 105+58.58

F.A.U RTE.	SECTION	COUNTY	TOTAL SHEETS	SHEET NO.
187	11-00121-11-BR	LAKE	496	360

CONTRACT NO. 61A63

ILLINOIS FED. AID PROJECT

PENTABLE = ...\PenTable\Slot1_GrayGrid.tbl

G:\LCDOT\21150.004\Drawings\shts\Xsec\S_XS_Wash_21150_004.dgn

		STAGE 1	STAGE 2	STAGE 3
106+00.00	UNSUITABLE	0.00	79.77	0.00
	EXCAVATION	0.00	6.36	0.00
	EMBANKMENT	0.00	154.78	0.00

ALL UNITS ARE SQ FT

LEGEND

- TEMPORARY PAVEMENT BY OTHERS
- STRUCTURAL EXCAVATION
- BRACED EXCAVATION

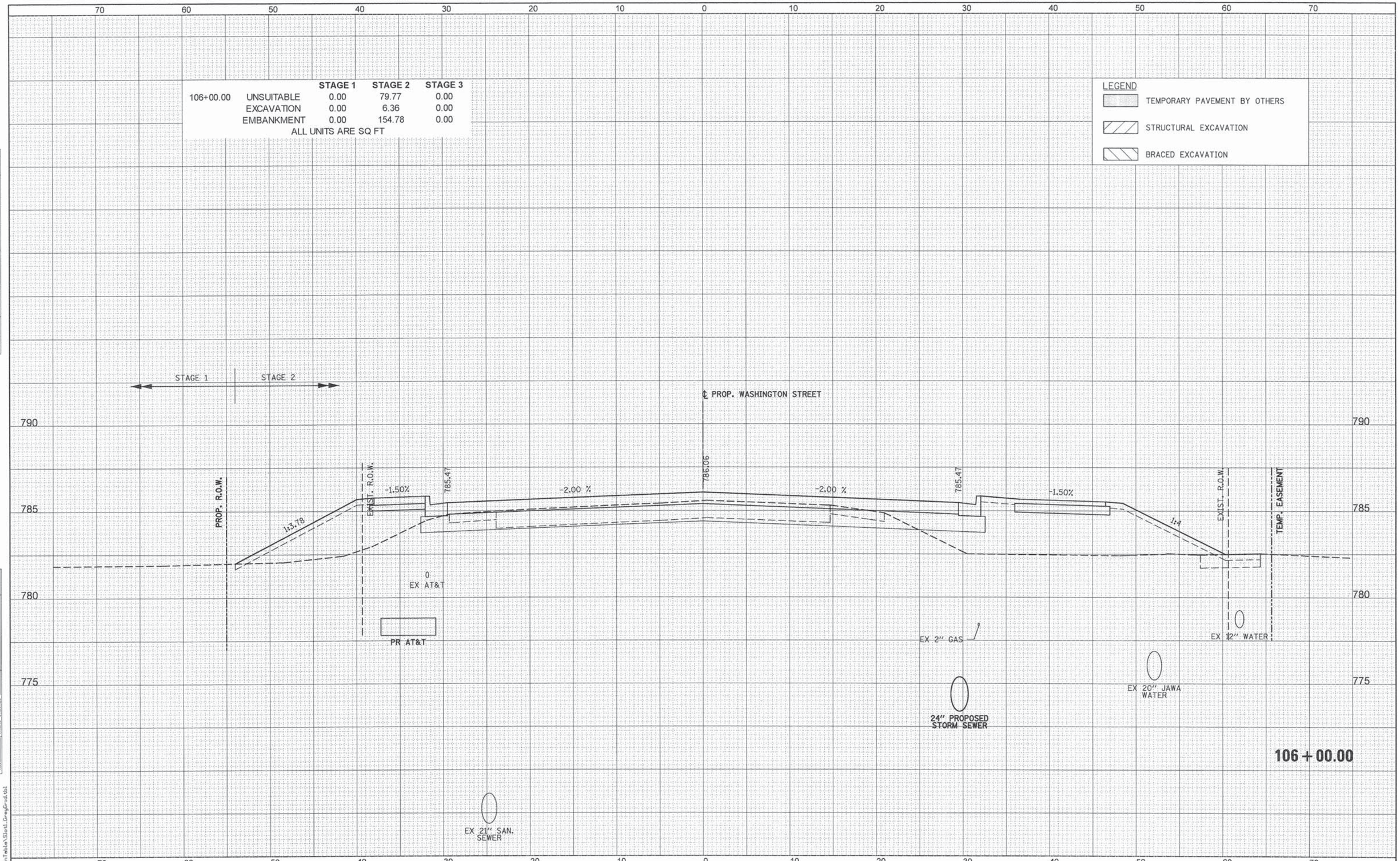

FINAL SURVEY	BY	DATE
SURVEYED		
PLOTTED		
TEMPLATE		
AREAS		
AREAS CHECKED		
NOTE BOOK		
NO.		

ORIGINAL SURVEY	BY	DATE
SURVEYED		
PLOTTED		
TEMPLATE		
AREAS		
AREAS CHECKED		
NOTE BOOK		
NO.		

PATRICK ENGINEERING
PATRICK ENGINEERING INC.
4970 VARSITY DRIVE
LISLE, IL 60532
patrickengineering.com

USER NAME = tkoeppen(Rdwy_Lisle)	DESIGNED - MJV	REVISED -	
	DRAWN - MJV	REVISED -	
PLOT SCALE = 10.0000 ' / in.	CHECKED - MJP	REVISED -	
PLOT DATE = 7/3/2014	DATE - 6/30/2014	REVISED -	

STATE OF ILLINOIS
DEPARTMENT OF TRANSPORTATION

WASHINGTON STREET FROM HARYAN WAY TO LAKE STREET
WASHINGTON STREET CROSS SECTIONS

SCALE: | SHEET NO. OF SHEETS | STA. 106+00.00 TO STA. 106+00.00

F.A.U RTE.	SECTION	COUNTY	TOTAL SHEETS	SHEET NO.
187	11-00121-11-BR	LAKE	496	361

CONTRACT NO. 61A63

ILLINOIS FED. AID PROJECT

PENTABLE = ..\PenTable\Slot1_Gray-rd.tbl

G:\LCDOT\21150_004\Drawings\shts\Xsec\S_XS_Wash_21150_004.dgn

		STAGE 1	STAGE 2	STAGE 3
106+50.00	UNSUITABLE	0.00	60.57	0.00
	EXCAVATION	0.00	1.80	0.00
	EMBANKMENT	0.00	140.48	0.00

ALL UNITS ARE SQ FT

LEGEND

- TEMPORARY PAVEMENT BY OTHERS
- STRUCTURAL EXCAVATION
- BRACED EXCAVATION

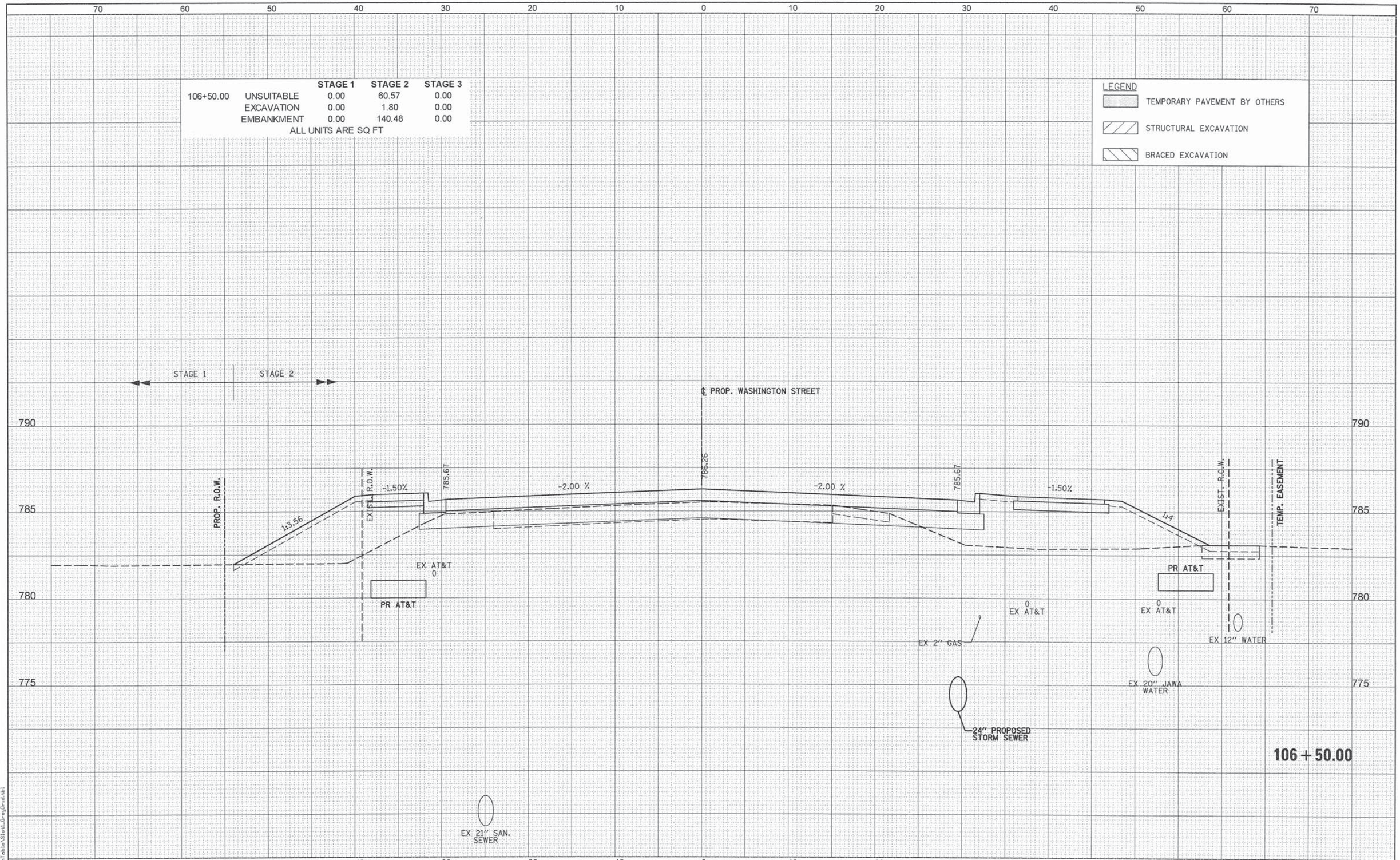

FINAL SURVEY	BY	DATE
SURVEYED		
PLOTTED		
TEMPLATE		
AREAS		
AREAS CHECKED		
NOTE BOOK		
NO.		

ORIGINAL SURVEY	BY	DATE
SURVEYED		
PLOTTED		
TEMPLATE		
AREAS		
AREAS CHECKED		
NOTE BOOK		
NO.		

PENTABLE = ...\PenTable\Slot1_Grayprint.tbl

PATRICK ENGINEERING INC.
4970 VARSITY DRIVE
LISLE, IL 60532
patrickengineering.com
PATRICK ENGINEERING

USER NAME = tkoepper(Rdwy_Lisle)	DESIGNED - MJV	REVISED -	
	DRAWN - MJV	REVISED -	
PLOT SCALE = 10.0000 ' / in.	CHECKED - MJP	REVISED -	
PLOT DATE = 7/3/2014	DATE - 6/30/2014	REVISED -	

STATE OF ILLINOIS
DEPARTMENT OF TRANSPORTATION

WASHINGTON STREET FROM HARYAN WAY TO LAKE STREET
WASHINGTON STREET CROSS SECTIONS

SCALE: | SHEET NO. OF SHEETS | STA. 106+50.00 TO STA. 106+50.00

F.A.U RTE.	SECTION	COUNTY	TOTAL SHEETS	SHEET NO.
187	11-00121-11-BR	LAKE	496	362

CONTRACT NO. 61A63

ILLINOIS FED. AID PROJECT

G:\LCDOT\21150_004\Drawings\shts\Xsec\S_XS_Wash.21150_004.dgn

		STAGE 1	STAGE 2	STAGE 3
107+00.00	UNSUITABLE	0.00	74.09	0.00
	EXCAVATION	0.00	0.00	0.00
	EMBANKMENT	0.00	153.98	0.00

ALL UNITS ARE SQ FT

LEGEND

- TEMPORARY PAVEMENT BY OTHERS
- STRUCTURAL EXCAVATION
- BRACED EXCAVATION

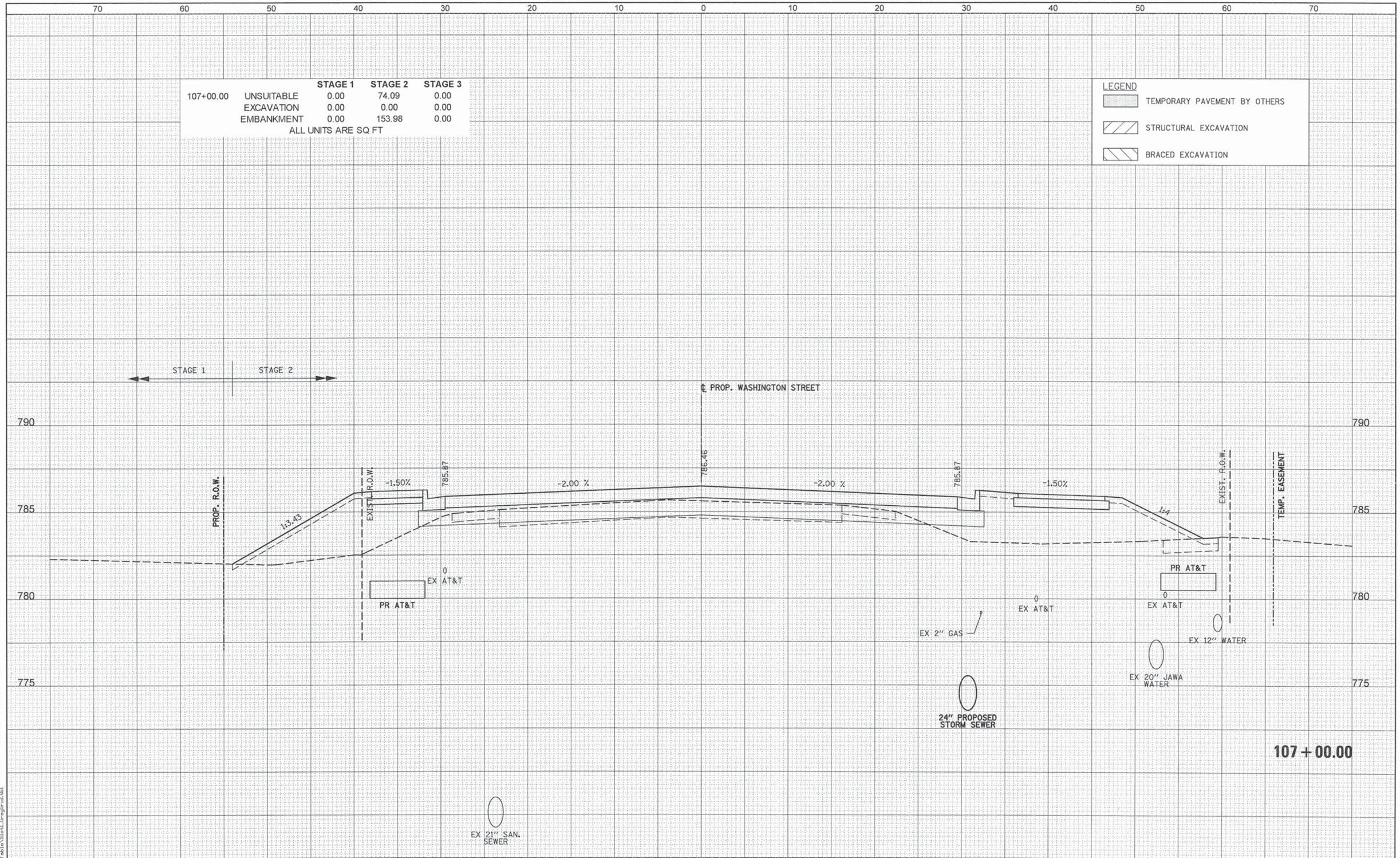

FINAL SURVEY	BY	DATE
SURVEYED		
PLOTTED		
TEMPLATE		
AREAS		
AREAS CHECKED		
NOTE BOOK		
NO.		

ORIGINAL SURVEY	BY	DATE
SURVEYED		
PLOTTED		
TEMPLATE		
AREAS		
AREAS CHECKED		
NOTE BOOK		
NO.		

PENTABLE = ...\PenTable\Slot1_GrayGrid.tbl

PATRICK ENGINEERING
PATRICK ENGINEERING INC.
4970 VARSITY DRIVE
LISLE, IL 60532
patrickengineering.com

USER NAME = tkoeppen(Rdwy_Lisle)	DESIGNED - MJV	REVISED -	
	DRAWN - MJV	REVISED -	
PLOT SCALE = 10.0000 ' / in.	CHECKED - MJP	REVISED -	
PLOT DATE = 7/3/2014	DATE - 6/30/2014	REVISED -	

STATE OF ILLINOIS
DEPARTMENT OF TRANSPORTATION

WASHINGTON STREET FROM HARYAN WAY TO LAKE STREET
WASHINGTON STREET CROSS SECTIONS

SCALE: | SHEET NO. OF SHEETS | STA. 107+00.00 TO STA. 107+00.00

F.A.U RTE.	SECTION	COUNTY	TOTAL SHEETS	SHEET NO.
187	11-00121-11-BR	LAKE	496	363

CONTRACT NO. 61A63

ILLINOIS FED. AID PROJECT

G:\LCDOT\21150_004\Drawings\shts\Xsec\S_XS_Wash_21150_004.dgn

		STAGE 1	STAGE 2	STAGE 3
107+50.00	UNSUITABLE	0.00	76.13	0.00
	EXCAVATION	0.00	0.00	0.00
	EMBANKMENT	0.00	143.40	0.00

ALL UNITS ARE SQ FT

LEGEND

- TEMPORARY PAVEMENT BY OTHERS
- STRUCTURAL EXCAVATION
- BRACED EXCAVATION

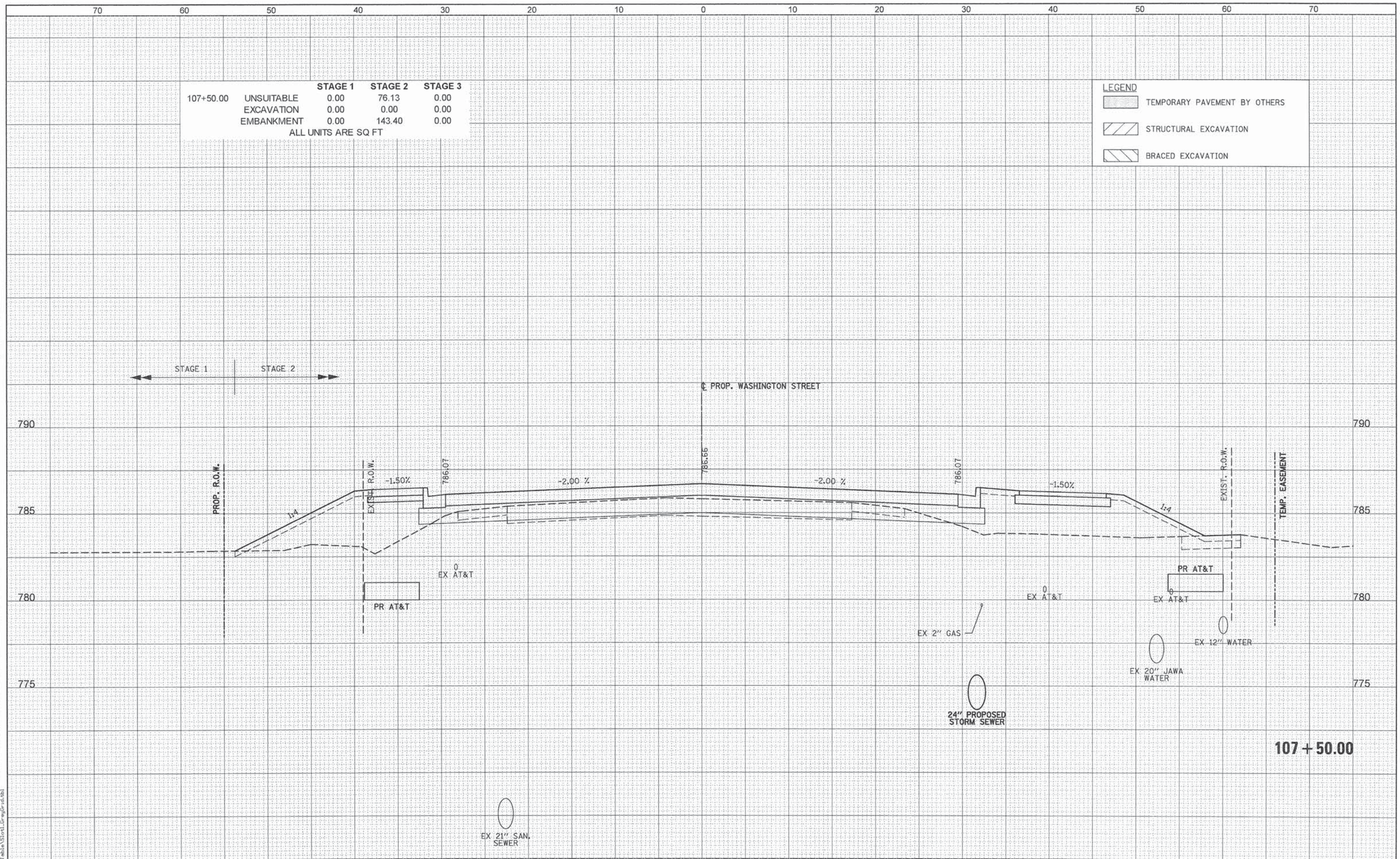

FINAL SURVEY	BY	DATE
NOTE BOOK		
NO.		
SURVEYED		
PLOTTED		
TEMPLATE		
AREAS		
AREAS CHECKED		

ORIGINAL SURVEY	BY	DATE
NOTE BOOK		
NO.		
SURVEYED		
PLOTTED		
TEMPLATE		
AREAS		
AREAS CHECKED		

PENTABLE = ...\Pentable\Slovi_Gray0rid.tbl

PATRICK ENGINEERING
PATRICK ENGINEERING INC.
4970 VARSITY DRIVE
LISLE, IL 60532
patrickengineering.com

USER NAME = tkoeppen(Rdwy_Lisle)	DESIGNED - MJV	REVISED -	
	DRAWN - MJV	REVISED -	
PLOT SCALE = 10.0000 ' / in.	CHECKED - MJP	REVISED -	
PLOT DATE = 7/3/2014	DATE - 6/30/2014	REVISED -	

STATE OF ILLINOIS
DEPARTMENT OF TRANSPORTATION

WASHINGTON STREET FROM HARYAN WAY TO LAKE STREET
WASHINGTON STREET CROSS SECTIONS

SCALE: | SHEET NO. OF SHEETS | STA. 107+50.00 TO STA. 107+50.00

F.A.U RTE.	SECTION	COUNTY	TOTAL SHEETS	SHEET NO.
187	11-00121-11-BR	LAKE	496	364

CONTRACT NO. 61A63

ILLINOIS FED. AID PROJECT

G:\LCDOT\21150.004\Drawings\shts\Xsec\S_XS_Wash_21150.004.dgn

		STAGE 1	STAGE 2	STAGE 3
108+00.00	UNSUITABLE	0.00	74.49	0.00
	EXCAVATION	0.00	0.00	0.00
	EMBANKMENT	0.00	123.92	0.00

ALL UNITS ARE SQ FT

LEGEND

- TEMPORARY PAVEMENT BY OTHERS
- STRUCTURAL EXCAVATION
- BRACED EXCAVATION

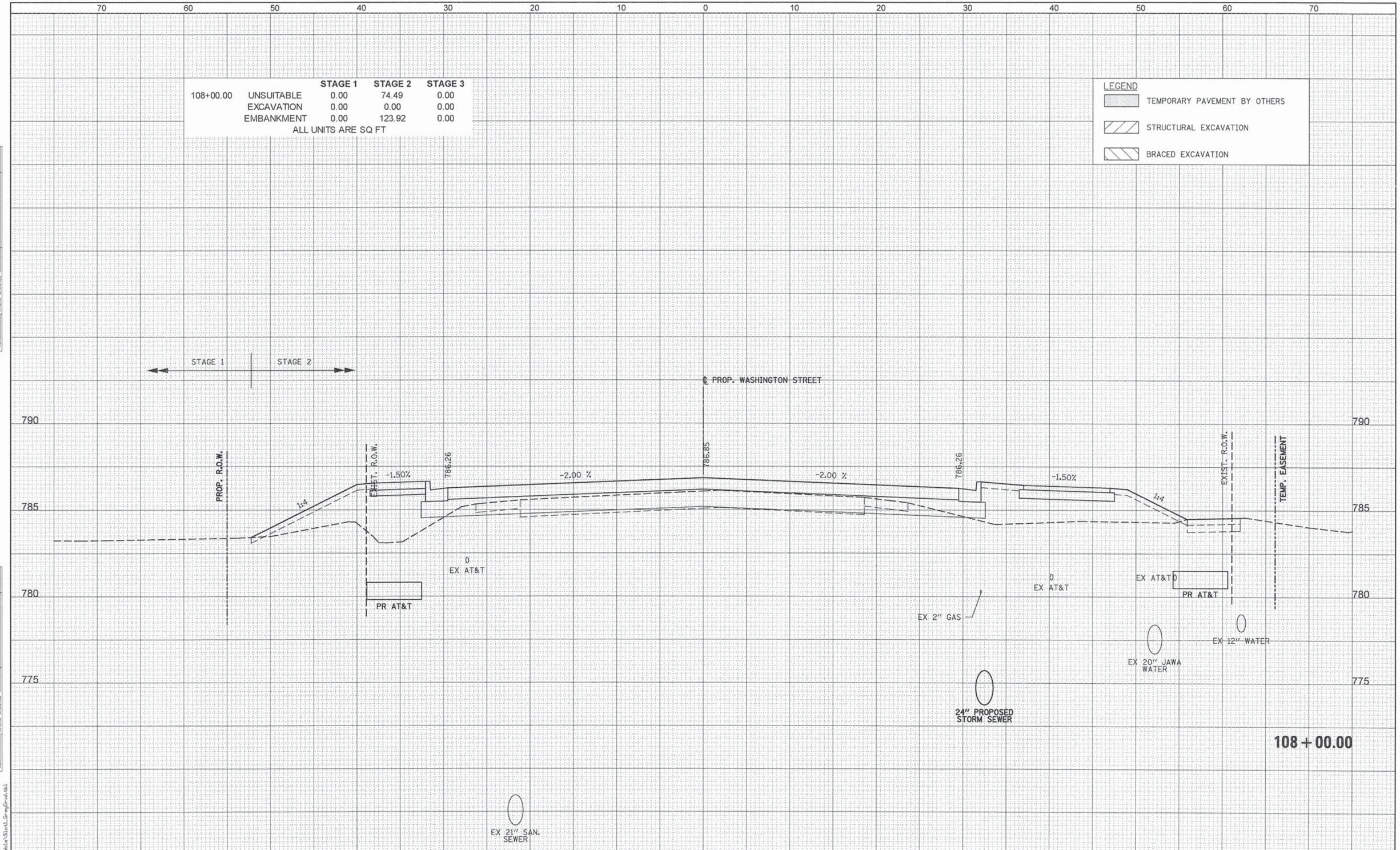

FINAL SURVEY		BY	DATE
NOTE BOOK	SURVEYED		
	PLOTTED		
	TEMPLATE		
	AREAS		
	AREAS CHECKED		
NO.			

ORIGINAL SURVEY		BY	DATE
NOTE BOOK	SURVEYED		
	PLOTTED		
	TEMPLATE		
	AREAS		
	AREAS CHECKED		
NO.			

PENTABLE = ...\Pentable\Slot1_GreyGrid.tbl

PATRICK ENGINEERING
PATRICK ENGINEERING INC.
4970 VARSITY DRIVE
LISLE, IL 60532
patrickengineering.com

USER NAME = tkoeppen(Rdwy_Lisle)	DESIGNED - MJV	REVISED -	
	DRAWN - MJV	REVISED -	
PLOT SCALE = 10.0000 ' / in.	CHECKED - MJP	REVISED -	
PLOT DATE = 7/3/2014	DATE - 6/30/2014	REVISED -	

STATE OF ILLINOIS
DEPARTMENT OF TRANSPORTATION

WASHINGTON STREET FROM HARYAN WAY TO LAKE STREET
WASHINGTON STREET CROSS SECTIONS

SCALE: | SHEET NO. OF SHEETS | STA. 108+00.00 TO STA. 108+00.00

F.A.U RTE.	SECTION	COUNTY	TOTAL SHEETS	SHEET NO.
187	11-00121-11-BR	LAKE	496	365

CONTRACT NO. 61A63

ILLINOIS FED. AID PROJECT

G:\LCDOT\21150_004\Drawings\shts\Xsec\S_XS_Wash_21150_004.dgn

		STAGE 1	STAGE 2	STAGE 3
108+50.00	UNSUITABLE	0.00	73.27	0.00
	EXCAVATION	0.00	6.18	0.00
	EMBANKMENT	0.00	99.17	0.00

ALL UNITS ARE SQ FT

LEGEND

- TEMPORARY PAVEMENT BY OTHERS
- STRUCTURAL EXCAVATION
- BRACED EXCAVATION

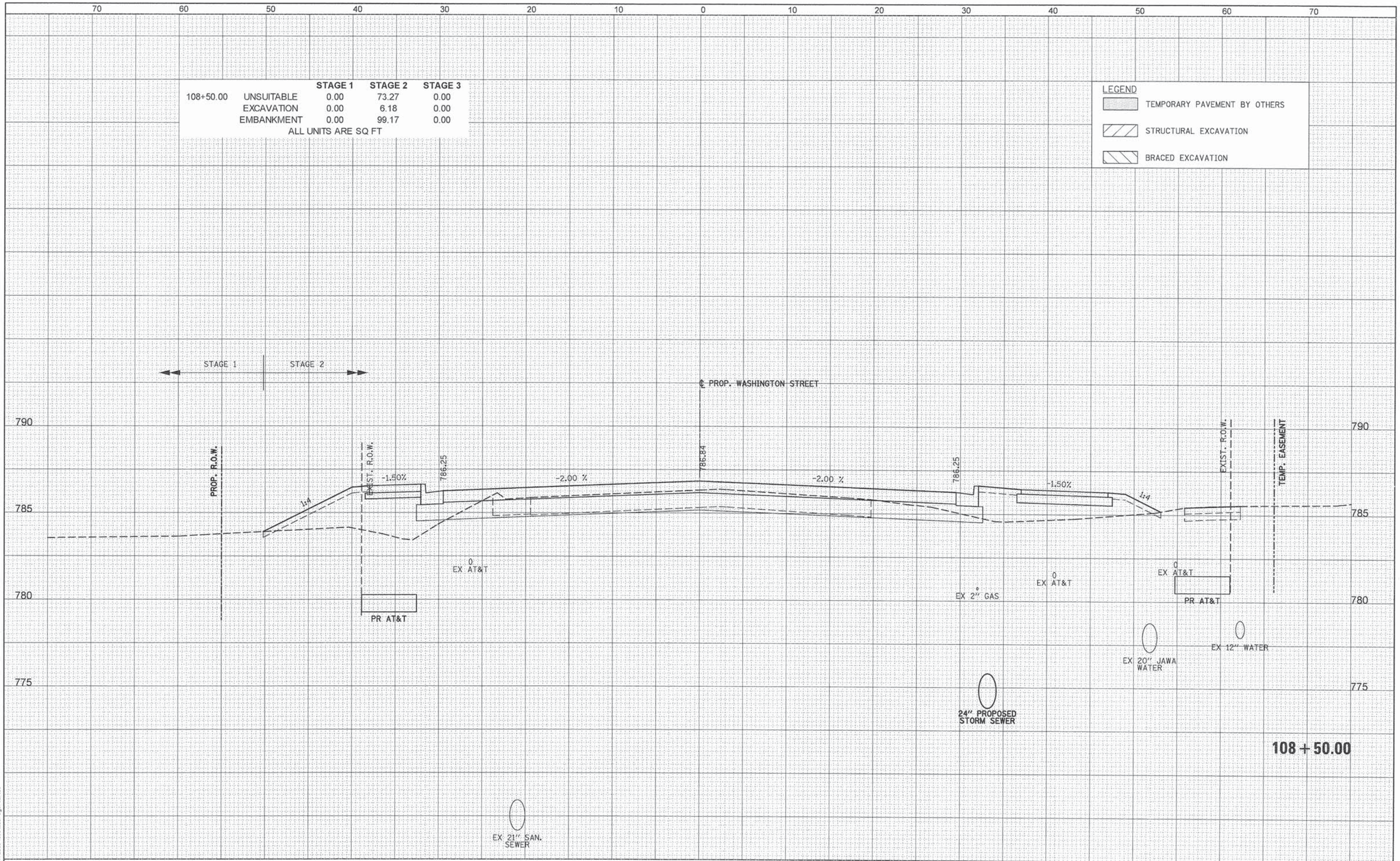

FINAL SURVEY		BY	DATE
NOTE BOOK	SURVEYED		
	PLOTTED		
	TEMPLATE		
	AREAS		
NO.	AREAS CHECKED		

ORIGINAL SURVEY		BY	DATE
NOTE BOOK	SURVEYED		
	PLOTTED		
	TEMPLATE		
	AREAS		
NO.	AREAS CHECKED		

PENTABLE = ...\PenTable\Slo1.GreyGrid.tbl

PATRICK ENGINEERING

PATRICK ENGINEERING INC.
4970 VARSITY DRIVE
LISLE, IL 60532
patrickengineering.com

USER NAME = tkoeppen(Rdwy_Lisle)	DESIGNED - MJV	REVISED -	
	DRAWN - MJV	REVISED -	
PLOT SCALE = 10.0000 ' / in.	CHECKED - MJP	REVISED -	
PLOT DATE = 7/3/2014	DATE - 6/30/2014	REVISED -	

STATE OF ILLINOIS
DEPARTMENT OF TRANSPORTATION

WASHINGTON STREET FROM HARYAN WAY TO LAKE STREET
WASHINGTON STREET CROSS SECTIONS

SCALE: | SHEET NO. OF SHEETS | STA. 108+50.00 TO STA. 108+50.00

F.A.U RTE.	SECTION	COUNTY	TOTAL SHEETS	SHEET NO.
187	11-00121-11-BR	LAKE	496	366

CONTRACT NO. 61A63

ILLINOIS FED. AID PROJECT

Q:\LCDOT\21150_004\Drawings\shts\Xsec\S_XS_Wash_21150_004.dgn

		STAGE 1	STAGE 2	STAGE 3
108+81.00	UNSUITABLE	0.00	65.71	0.00
	EXCAVATION	0.00	31.04	0.00
	EMBANKMENT	0.00	40.72	0.00

ALL UNITS ARE SQ FT

LEGEND

- TEMPORARY PAVEMENT BY OTHERS
- STRUCTURAL EXCAVATION
- BRACED EXCAVATION

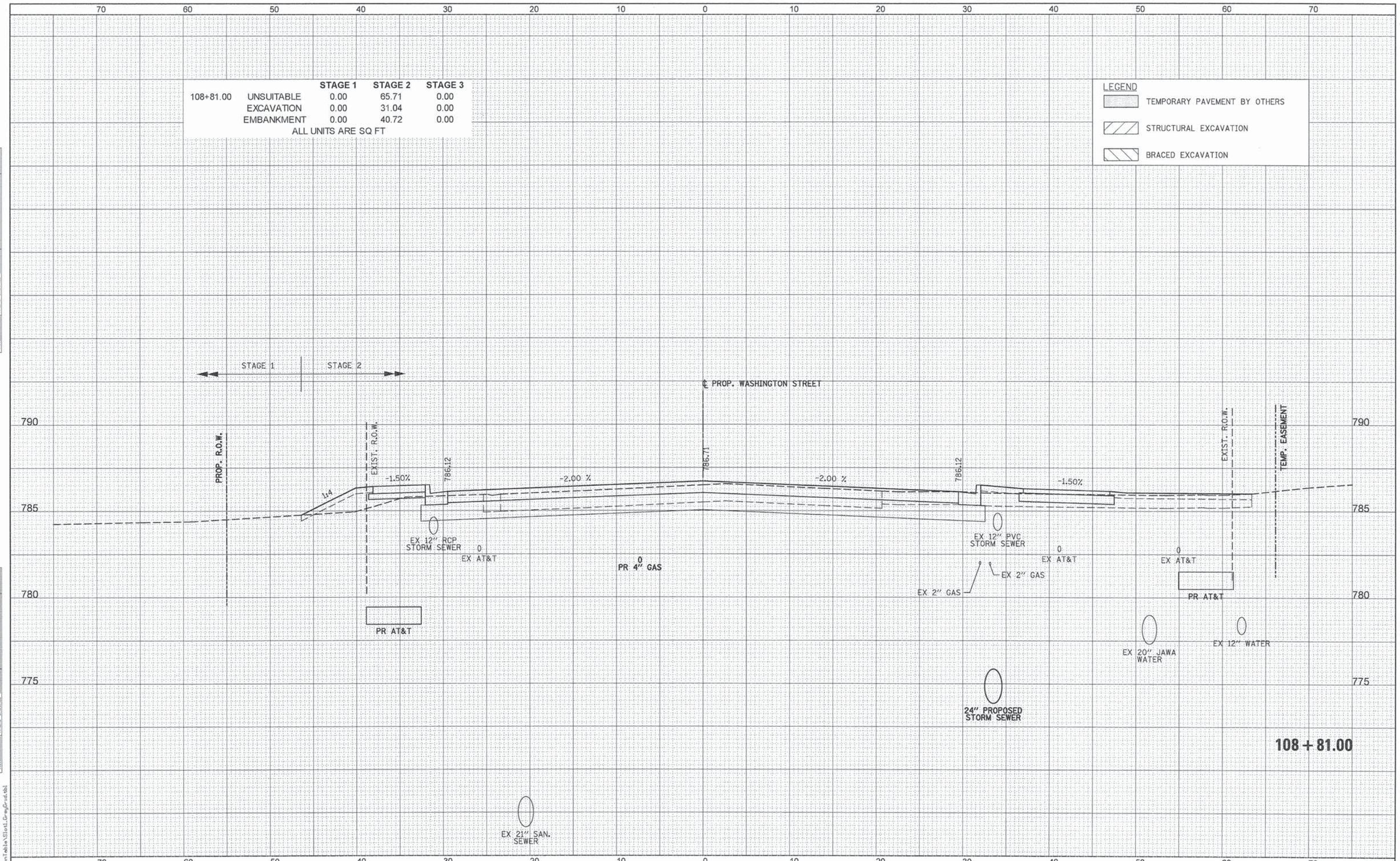

PATRICK ENGINEERING INC. 4970 VARSITY DRIVE LISLE, IL 60532 patrickengineering.com	USER NAME = tkoepper(Rdwy_Lisle)	DESIGNED - MJV	REVISED -
		DRAWN - MJV	REVISED -
	PLOT SCALE = 10.0000 ' / in.	CHECKED - MJP	REVISED -
	PLOT DATE = 7/3/2014	DATE - 6/30/2014	REVISED -

STATE OF ILLINOIS
DEPARTMENT OF TRANSPORTATION

WASHINGTON STREET FROM HARYAN WAY TO LAKE STREET
WASHINGTON STREET CROSS SECTIONS

SCALE: | SHEET NO. OF SHEETS | STA. 108+81.00 TO STA. 108+81.00

F.A.U RTE.	SECTION	COUNTY	TOTAL SHEETS	SHEET NO.
187	11-00121-11-BR	LAKE	496	367

CONTRACT NO. 61A63

ILLINOIS FED. AID PROJECT

PENTABLE = ...\Pentable\Slosl_GreyGrid.tbl

G:\LCDOT\21150_004\Drawings\shts\Xsec\S_XS_Wash_21150_004.dgn

	STAGE 1	STAGE 2	STAGE 3
109+28.67 UNSUITABLE	0.00	45.58	SEE
EXCAVATION	0.00	91.76	RUNAROUND
EMBANKMENT	0.00	36.29	STA. 17+68.26

ALL UNITS ARE SQ FT

LEGEND

- TEMPORARY PAVEMENT BY OTHERS
- STRUCTURAL EXCAVATION
- BRACED EXCAVATION

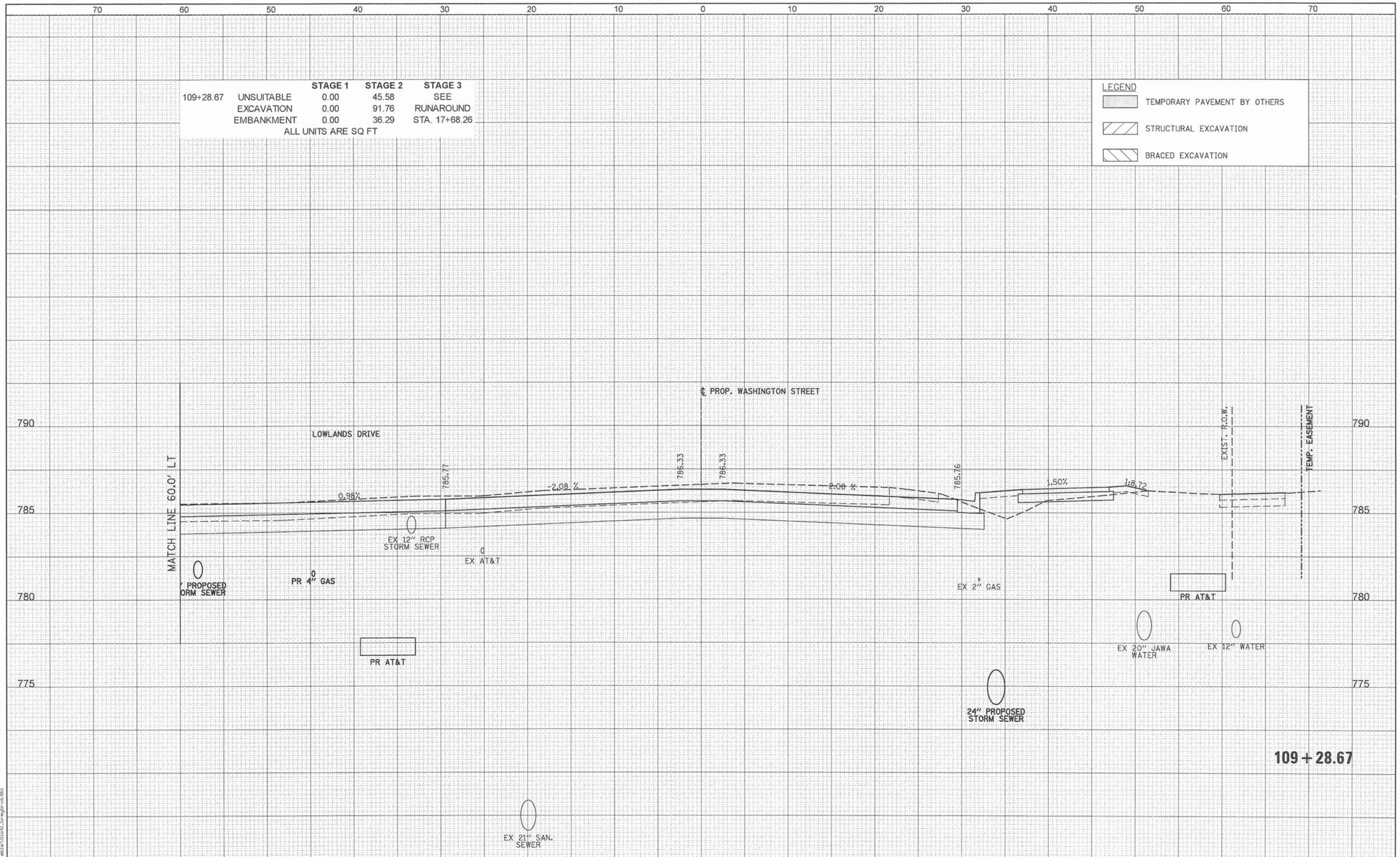

FINAL SURVEY	BY	DATE
SURVEYED		
PLOTTED		
TEMPLATE		
AREAS		
AREAS CHECKED		
NOTE BOOK NO.		

ORIGINAL SURVEY	BY	DATE
SURVEYED		
PLOTTED		
TEMPLATE		
AREAS		
AREAS CHECKED		
NOTE BOOK NO.		

PENTABLE = ...\PenTables\Slot1.CrayOrd.tbl

Q:\LCDOT\21150_004\Drawings\shts\Xsec\S_XS_Wash_21150_004.dgn

PATRICK ENGINEERING

PATRICK ENGINEERING INC.
4970 VARSITY DRIVE
LISLE, IL 60532
patrickengineering.com

USER NAME = tkoeppen(Rdwy_Lisle)	DESIGNED - MJV	REVISED -	
	DRAWN - MJV	REVISED -	
PLOT SCALE = 10.0000 ' / in.	CHECKED - MJP	REVISED -	
PLOT DATE = 7/3/2014	DATE - 6/30/2014	REVISED -	

STATE OF ILLINOIS
DEPARTMENT OF TRANSPORTATION

WASHINGTON STREET FROM HARYAN WAY TO LAKE STREET
WASHINGTON STREET CROSS SECTIONS

SCALE: | SHEET NO. OF SHEETS | STA. 109+28.67 TO STA. 109+28.67

F.A.U RTE.	SECTION	COUNTY	TOTAL SHEETS	SHEET NO.
187	11-00121-11-BR	LAKE	496	368

CONTRACT NO. 61A63

ILLINOIS | FED. AID PROJECT

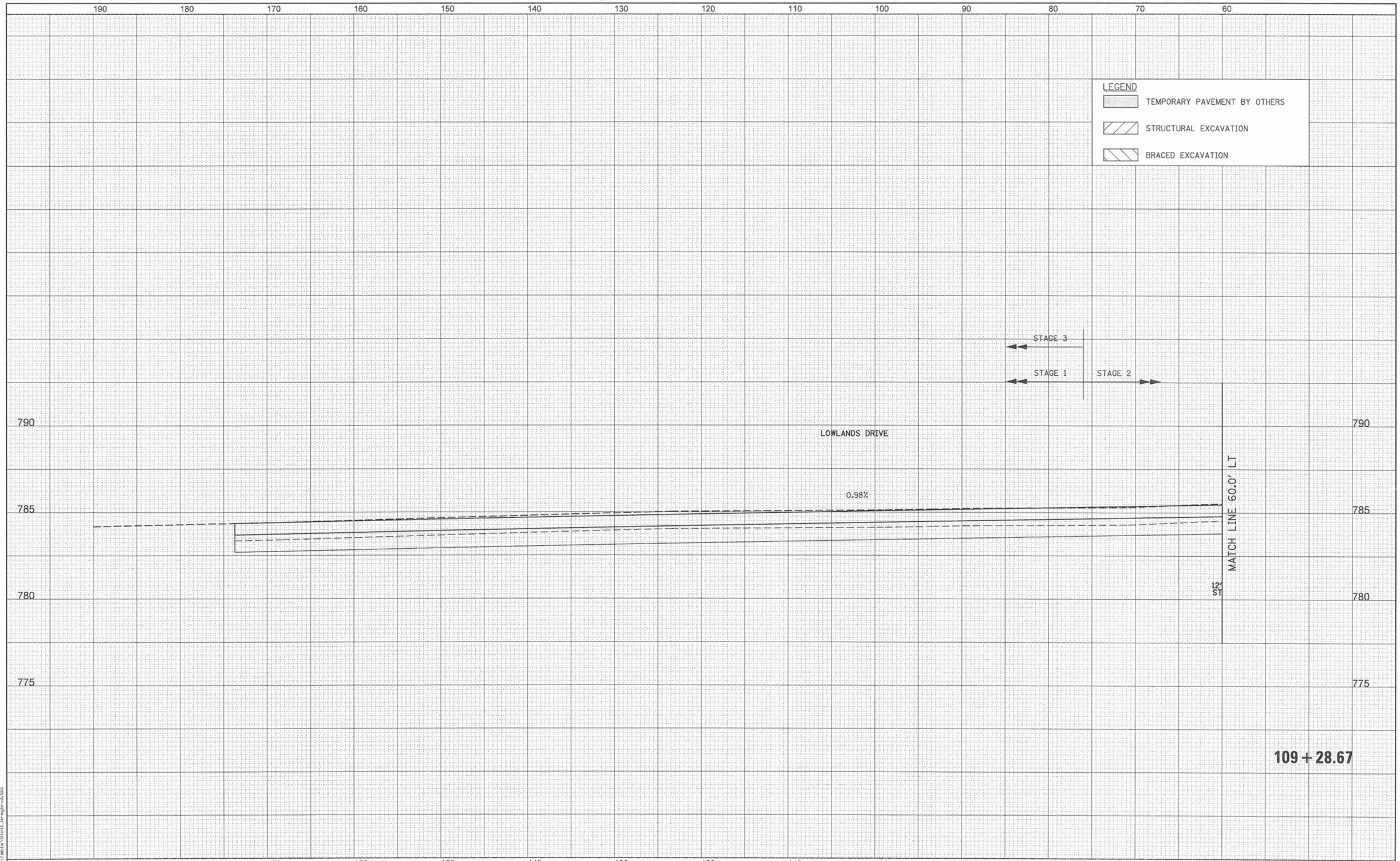

FINAL SURVEY	BY	DATE
NOTE BOOK	SURVEYED	
NO.	PLOTTED	
	TEMPLATE	
	AREAS	
	AREAS CHECKED	

ORIGINAL SURVEY	BY	DATE
NOTE BOOK	SURVEYED	
NO.	PLOTTED	
	TEMPLATE	
	AREAS	
	AREAS CHECKED	

PENTABLE = ...\PenTable\Slot1_GrayGrid.tbl

G:\LCDOT\21150_004\Drawings\shts\Xsec\S_XS_Wash_21150_004.dgn

PATRICK ENGINEERING INC.
4970 VARSITY DRIVE
LISLE, IL 60532
patrickengineering.com
PATRICK ENGINEERING

USER NAME = tkoeppen(Rdwy_Lisle)	DESIGNED - MJV	REVISED -	
	DRAWN - MJV	REVISED -	
PLOT SCALE = 10.0000 ' / in.	CHECKED - MJP	REVISED -	
PLOT DATE = 7/3/2014	DATE - 6/30/2014	REVISED -	

STATE OF ILLINOIS
DEPARTMENT OF TRANSPORTATION

WASHINGTON STREET FROM HARYAN WAY TO LAKE STREET
WASHINGTON STREET CROSS SECTIONS

SCALE: | SHEET NO. OF SHEETS | STA. 109+28.67 TO STA. 109+28.67

F.A.U RTE.	SECTION	COUNTY	TOTAL SHEETS	SHEET NO.
187	11-00121-11-BR	LAKE	496	369
		CONTRACT NO. 61A63		
		ILLINOIS FED. AID PROJECT		

		STAGE 1	STAGE 2	STAGE 3
109+76.35	UNSUITABLE	0.00	50.67	0.00
	EXCAVATION	0.00	119.52	0.00
	EMBANKMENT	0.00	21.30	0.00

ALL UNITS ARE SQ FT

LEGEND

- TEMPORARY PAVEMENT BY OTHERS
- STRUCTURAL EXCAVATION
- BRACED EXCAVATION

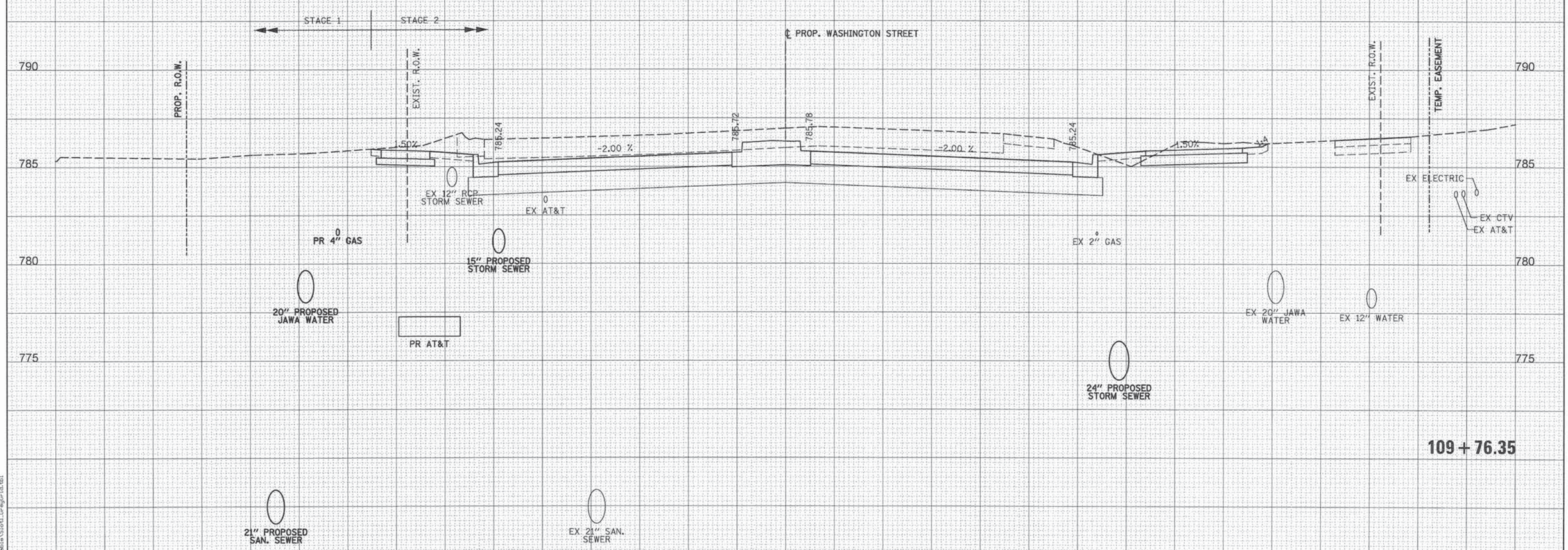

FINAL SURVEY	BY	DATE
NOTE BOOK NO.	SURVEYED	
	PLOTTED	
	TEMPLATE	
	AREAS	
	AREAS CHECKED	

ORIGINAL SURVEY	BY	DATE
NOTE BOOK NO.	SURVEYED	
	PLOTTED	
	TEMPLATE	
	AREAS	
	AREAS CHECKED	

PATRICK ENGINEERING INC.
4970 VARSITY DRIVE
LISLE, IL 60532
patrickengineering.com

USER NAME = tkoeppen(Rdwy_Lisle)	DESIGNED - MJV	REVISED -	
	DRAWN - MJV	REVISED -	
PLOT SCALE = 10.0000 ' / in.	CHECKED - MJP	REVISED -	
PLOT DATE = 7/3/2014	DATE - 6/30/2014	REVISED -	

STATE OF ILLINOIS
DEPARTMENT OF TRANSPORTATION

WASHINGTON STREET FROM HARYAN WAY TO LAKE STREET
WASHINGTON STREET CROSS SECTIONS

SCALE: | SHEET NO. OF SHEETS | STA. 109+76.35 TO STA. 109+76.35

F.A.U RTE.	SECTION	COUNTY	TOTAL SHEETS	SHEET NO.
187	11-00121-11-BR	LAKE	496	370

CONTRACT NO. 61A63

ILLINOIS FED. AID PROJECT

PENTABLE = ...\Pentable\Slot1.GrayGrid.tbl

G:\LCDOT\21150.004\Drawings\shts\Xsec\S_XS_Wash_21150.004.dgn

		STAGE 1	STAGE 2	STAGE 3
110+00.00	UNSUITABLE	0.00	48.09	0.00
	EXCAVATION	0.00	158.75	0.00
	EMBANKMENT	0.00	11.56	0.00

ALL UNITS ARE SQ FT

LEGEND

- TEMPORARY PAVEMENT BY OTHERS
- STRUCTURAL EXCAVATION
- BRACED EXCAVATION

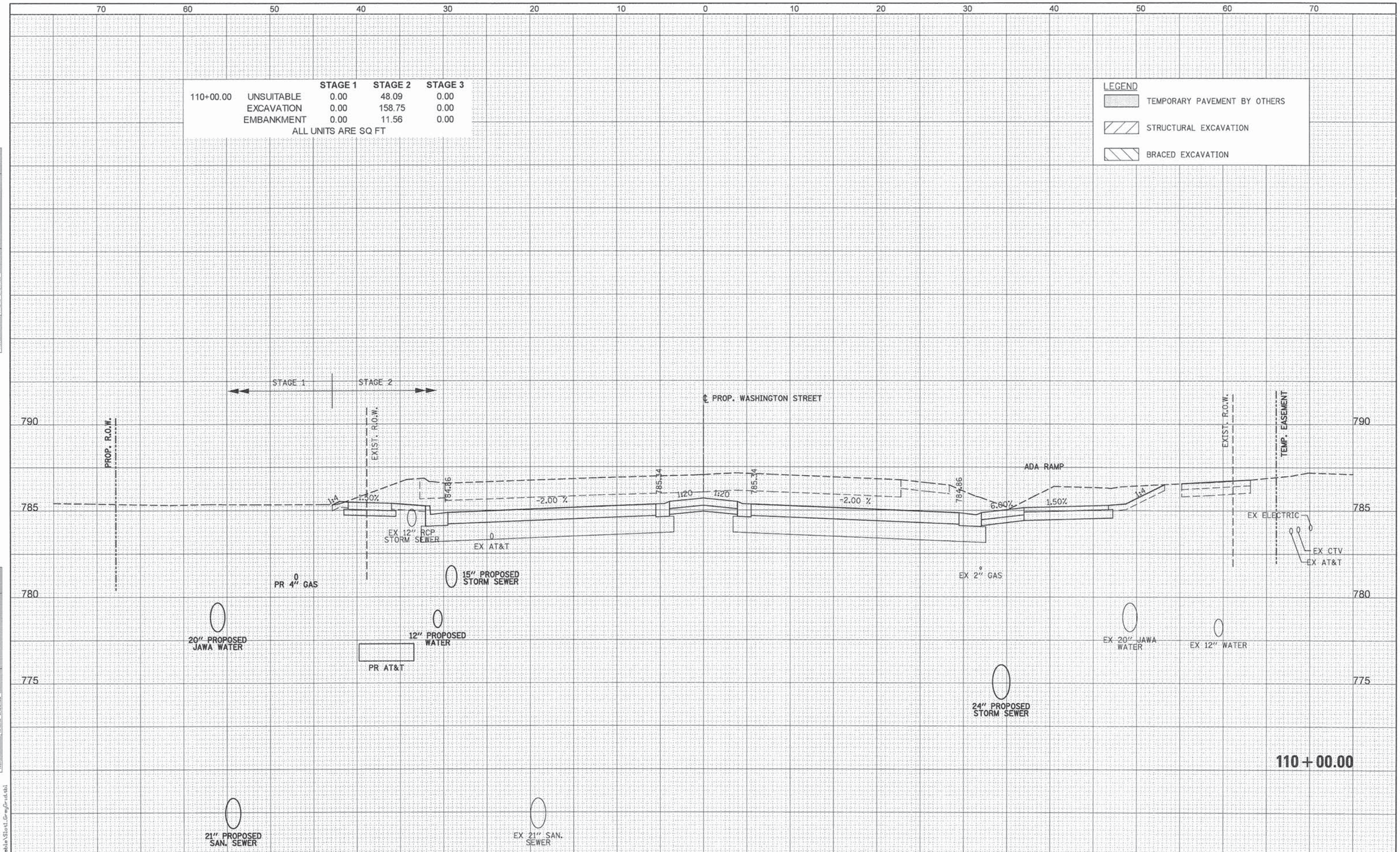

FINAL SURVEY	BY	DATE
SURVEYED		
PLOTTED		
TEMPLATE		
AREAS		
AREAS CHECKED		
NOTE BOOK		
NO.		

ORIGINAL SURVEY	BY	DATE
SURVEYED		
PLOTTED		
TEMPLATE		
AREAS		
AREAS CHECKED		
NOTE BOOK		
NO.		

PENTABLE = ...\PenTable\Slot_GrayGrid.tbl

PATRICK ENGINEERING INC.
4970 VARSITY DRIVE
LISLE, IL 60532
patrickengineering.com
PATRICK ENGINEERING

USER NAME = tkoepper(Rdwy_Lisle)	DESIGNED - MJV	REVISED -	
	DRAWN - MJV	REVISED -	
PLOT SCALE = 10.0000 ' / in.	CHECKED - MJP	REVISED -	
PLOT DATE = 7/3/2014	DATE - 6/30/2014	REVISED -	

STATE OF ILLINOIS
DEPARTMENT OF TRANSPORTATION

WASHINGTON STREET FROM HARYAN WAY TO LAKE STREET
WASHINGTON STREET CROSS SECTIONS

SCALE: | SHEET NO. OF SHEETS | STA. 110+00.00 TO STA. 110+00.00

F.A.U RTE.	SECTION	COUNTY	TOTAL SHEETS	SHEET NO.
187	11-00121-11-BR	LAKE	496	371

CONTRACT NO. 61A63

ILLINOIS FED. AID PROJECT

G:\LCDOT\21150.004\Drawings\shts\Xsec\S_XS_Wash_21150_004.dgn

		STAGE 1	STAGE 2	STAGE 3
110+50.00	UNSUITABLE	0.00	31.19	0.00
	EXCAVATION	0.00	260.92	0.00
	EMBANKMENT	0.00	1.36	0.00

ALL UNITS ARE SQ FT

LEGEND

- TEMPORARY PAVEMENT BY OTHERS
- STRUCTURAL EXCAVATION
- BRACED EXCAVATION

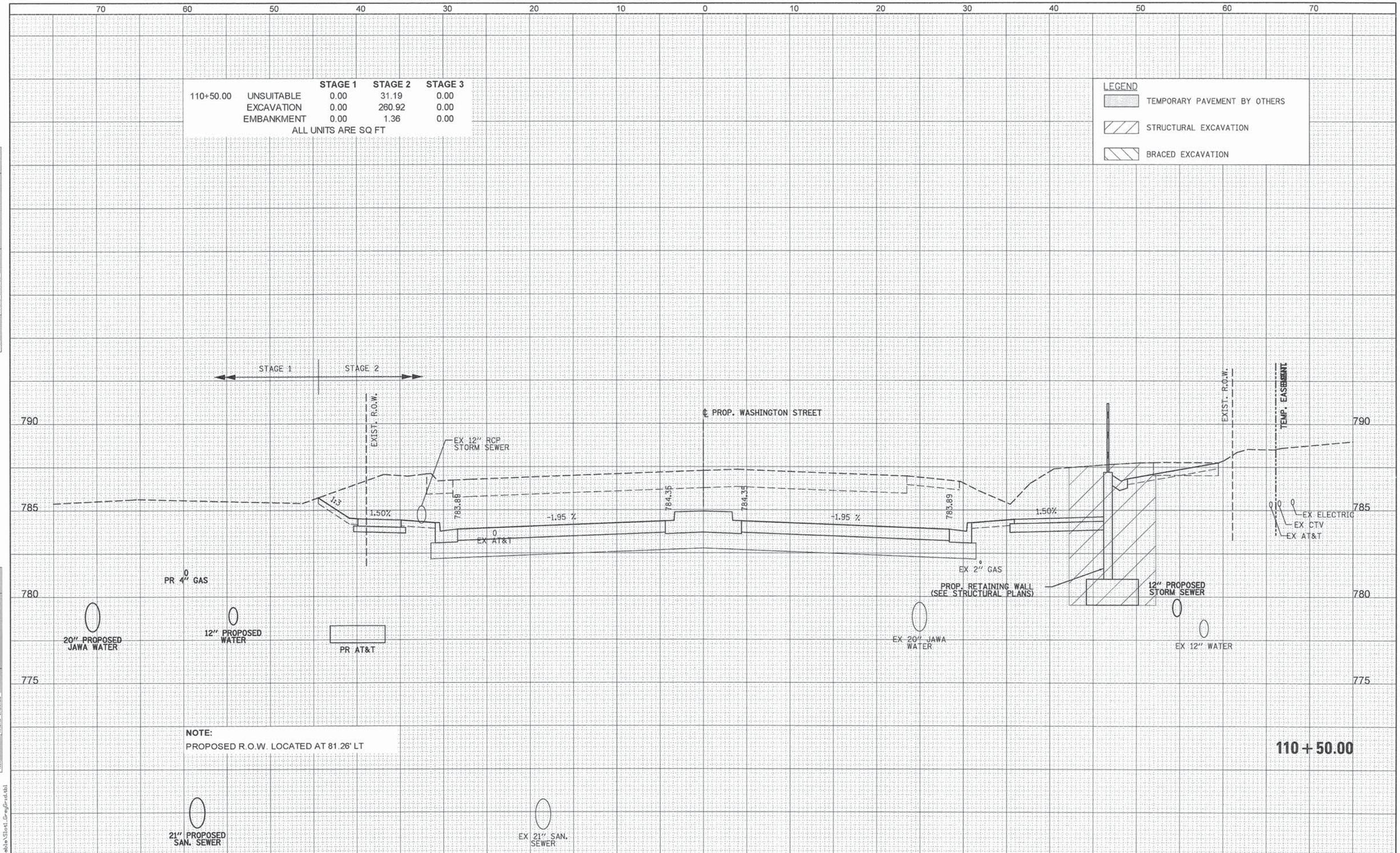

NOTE:
PROPOSED R.O.W. LOCATED AT 81.26' LT

110 + 50.00

FINAL SURVEY		BY	DATE
NOTE BOOK	SURVEYED		
	PLOTTED		
	TEMPLATE		
	AREAS		
	AREAS CHECKED		
NO.			

ORIGINAL SURVEY		BY	DATE
NOTE BOOK	SURVEYED		
	PLOTTED		
	TEMPLATE		
	AREAS		
	AREAS CHECKED		
NO.			

PENTABLE = ...\PenTable\Slot1_GrayGrid.tbl

PATRICK ENGINEERING INC.
4970 VARSITY DRIVE
LISLE, IL 60532
patrickengineering.com

USER NAME = tkoeppen(Rdwy_Lisle)	DESIGNED - MJV	REVISED -	
	DRAWN - MJV	REVISED -	
PLOT SCALE = 10.0000 ' / in.	CHECKED - MJP	REVISED -	
PLOT DATE = 7/3/2014	DATE - 6/30/2014	REVISED -	

STATE OF ILLINOIS
DEPARTMENT OF TRANSPORTATION

WASHINGTON STREET FROM HARYAN WAY TO LAKE STREET
WASHINGTON STREET CROSS SECTIONS

SCALE: | SHEET NO. OF SHEETS | STA. 110+50.00 TO STA. 110+50.00

F.A.U RTE.	SECTION	COUNTY	TOTAL SHEETS	SHEET NO.
187	11-00121-11-BR	LAKE	496	372

CONTRACT NO. 61A63

ILLINOIS FED. AID PROJECT

G:\LCDOT\21150_024\Drawings\shts\Xsec\S_XS_Wash_21150_024.dgn

		STAGE 1	STAGE 2	STAGE 3
111+00.00	UNSUITABLE	0.00	37.57	0.00
	EXCAVATION	0.00	386.54	0.00
	EMBANKMENT	0.00	0.56	0.00

ALL UNITS ARE SQ FT

LEGEND

- TEMPORARY PAVEMENT BY OTHERS
- STRUCTURAL EXCAVATION
- BRACED EXCAVATION

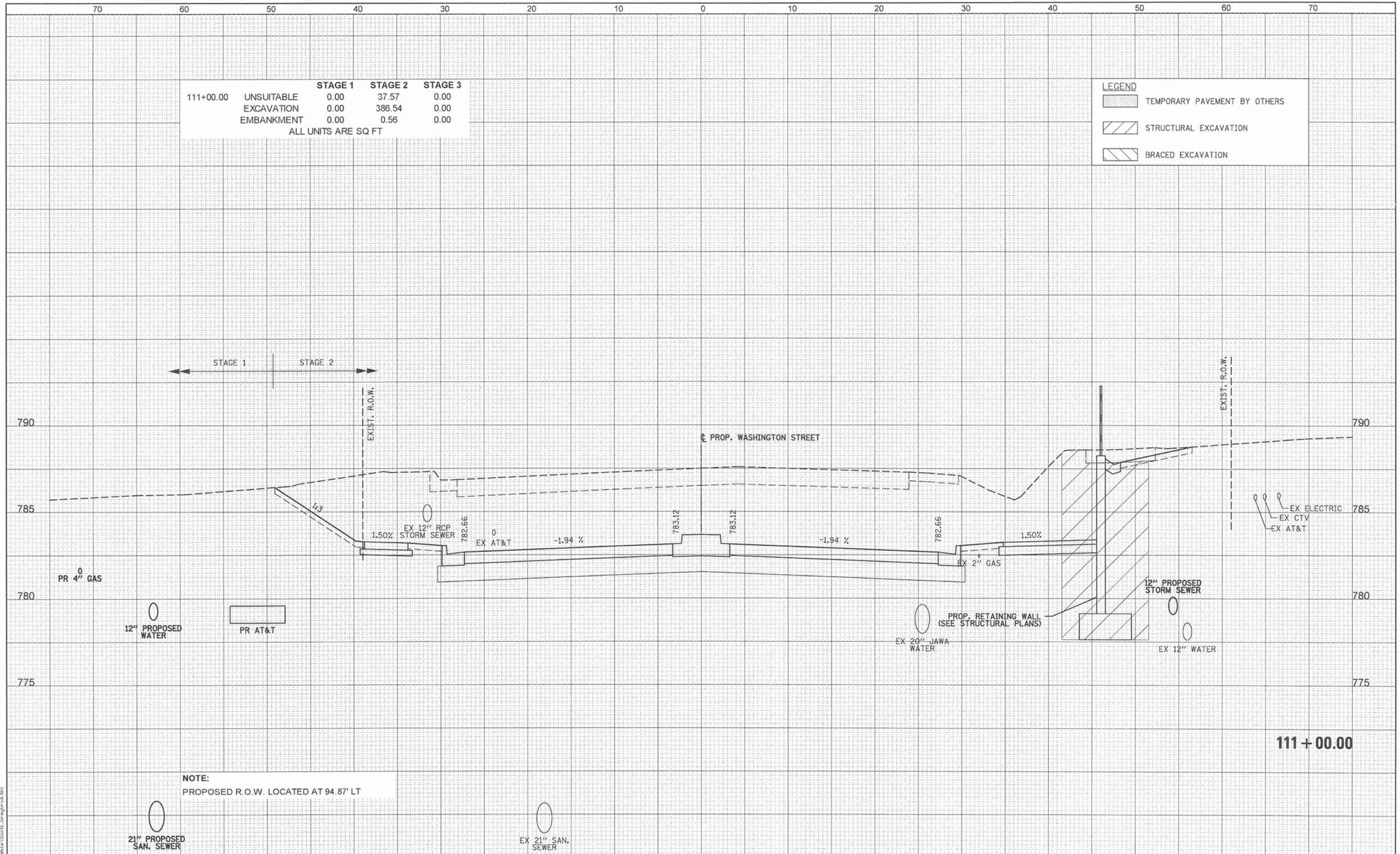

NOTE:

PROPOSED R.O.W. LOCATED AT 94.87' LT

PATRICK ENGINEERING INC. 4970 VARSITY DRIVE LISLE, IL 60532 patrickengineering.com	USER NAME = tkoeppen(Rdwy_Lisle)	DESIGNED - MJV	REVISED -
		DRAWN - MJV	REVISED -
	PLOT SCALE = 10.0000 ' / in.	CHECKED - MJP	REVISED -
	PLOT DATE = 7/3/2014	DATE - 6/30/2014	REVISED -

STATE OF ILLINOIS
DEPARTMENT OF TRANSPORTATION

WASHINGTON STREET FROM HARYAN WAY TO LAKE STREET
WASHINGTON STREET CROSS SECTIONS

SCALE: | SHEET NO. OF SHEETS | STA. 111+00.00 TO STA. 111+00.00

F.A.U RTE.	SECTION	COUNTY	TOTAL SHEETS	SHEET NO.
187	11-00121-11-BR	LAKE	496	373

CONTRACT NO. 61A63

ILLINOIS FED. AID PROJECT

PENTABLE = ...\PenTable\Slott_Dwg&Grid.tbl

Q:\LCDOT\21150_004\Drawings\shts\Xsec\S_XS_Wash_21150_004.dgn

		STAGE 1	STAGE 2	STAGE 3
111+50.00	UNSUITABLE	0.00	43.35	0.00
	EXCAVATION	0.00	538.73	0.00
	EMBANKMENT	0.00	0.61	0.00

ALL UNITS ARE SQ FT

LEGEND

- TEMPORARY PAVEMENT BY OTHERS
- STRUCTURAL EXCAVATION
- BRACED EXCAVATION

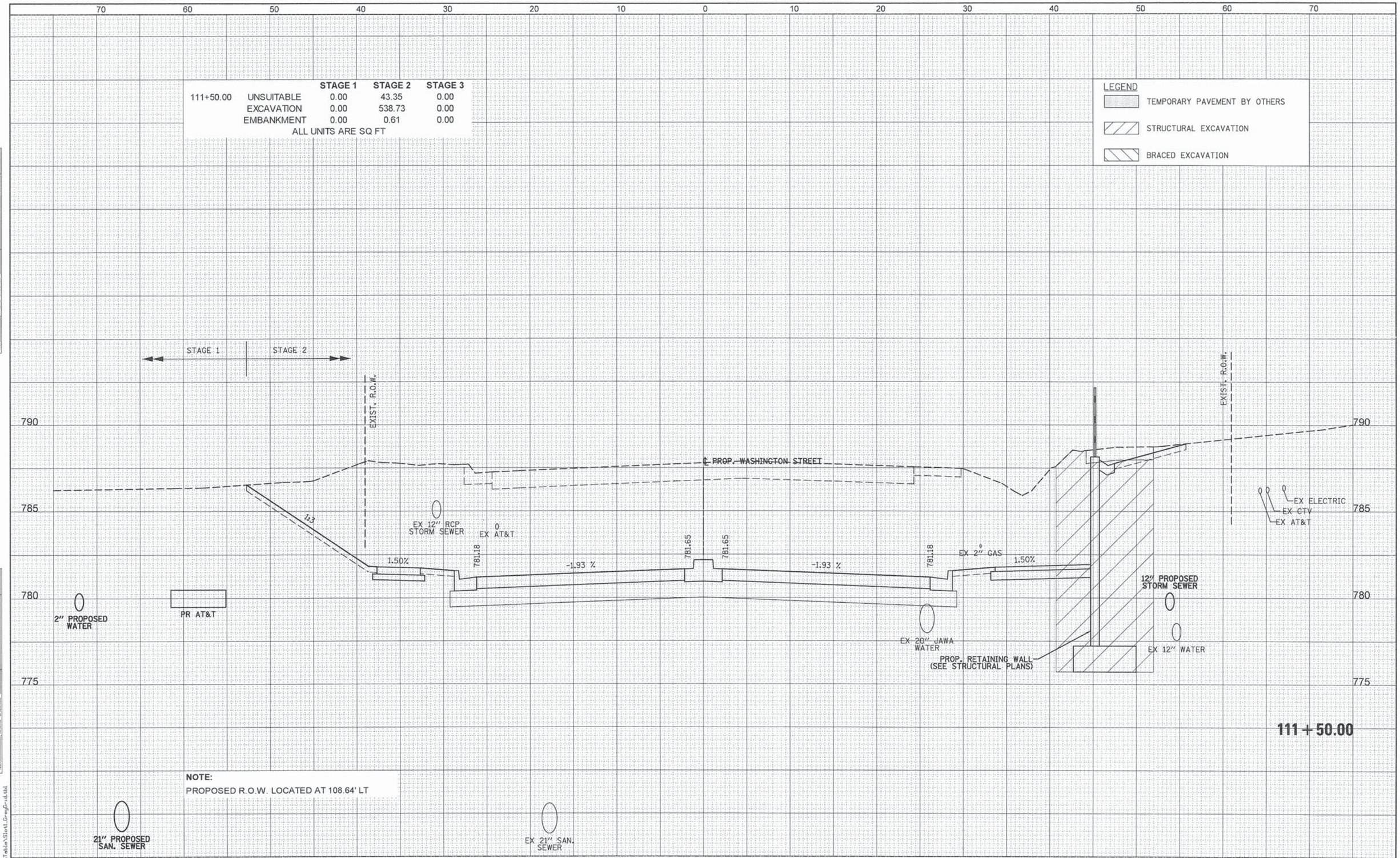

NOTE:
PROPOSED R.O.W. LOCATED AT 108.64' LT

PATRICK ENGINEERING INC. 4970 VARSITY DRIVE LISLE, IL 60532 patrickengineering.com	USER NAME = tkoeppen(Rdwy_Lisle)	DESIGNED - MJV	REVISED -
		DRAWN - MJV	REVISED -
	PLOT SCALE = 10.0000 ' / in.	CHECKED - MJP	REVISED -
	PLOT DATE = 7/3/2014	DATE - 6/30/2014	REVISED -

STATE OF ILLINOIS
DEPARTMENT OF TRANSPORTATION

WASHINGTON STREET FROM HARYAN WAY TO LAKE STREET
WASHINGTON STREET CROSS SECTIONS

SCALE: | SHEET NO. OF SHEETS | STA. 111+50.00 TO STA. 111+50.00

F.A.U RTE.	SECTION	COUNTY	TOTAL SHEETS	SHEET NO.
187	11-00121-11-BR	LAKE	496	374

CONTRACT NO. 61A63

ILLINOIS FED. AID PROJECT

PENTABLE = ...\PenTable\Stoll_GreyGrid.tbl

G:\LCDOT\21150.004\Drawings\shts\Xsec\S_XS_Wash_21150.004.dgn

		STAGE 1	STAGE 2	STAGE 3
112+00.00	UNSUITABLE	0.00	51.76	0.00
	EXCAVATION	0.00	697.69	0.00
	EMBANKMENT	0.00	1.92	0.00

ALL UNITS ARE SQ FT

LEGEND

- TEMPORARY PAVEMENT BY OTHERS
- STRUCTURAL EXCAVATION
- BRACED EXCAVATION

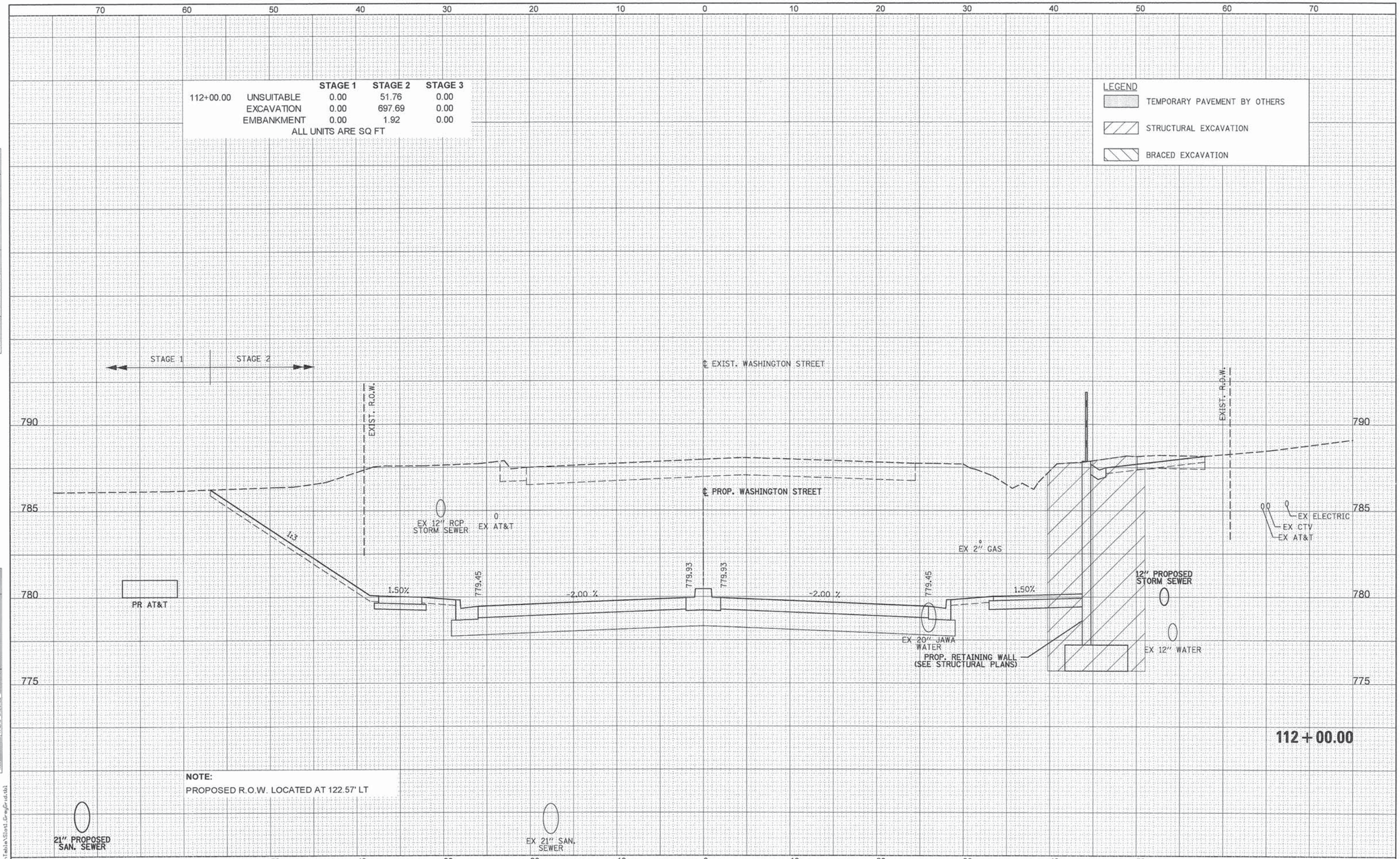

NOTE:
PROPOSED R.O.W. LOCATED AT 122.57' LT

FINAL SURVEY	BY	DATE
SURVEYED		
PLOTTED		
TEMPLATE		
AREAS		
AREAS CHECKED		
NOTE BOOK		
NO.		

ORIGINAL SURVEY	BY	DATE
SURVEYED		
PLOTTED		
TEMPLATE		
AREAS		
AREAS CHECKED		
NOTE BOOK		
NO.		

PENTABLE = ...\PenTable\Slot1_GrayGrid.tbl

PATRICK ENGINEERING INC.
4970 VARSITY DRIVE
LISLE, IL 60532
patrickengineering.com
PATRICK ENGINEERING

USER NAME = tkoepper(Rdwy_Lisle)	DESIGNED - MJV	REVISED -	
	DRAWN - MJV	REVISED -	
PLOT SCALE = 10.0000 ' / in.	CHECKED - MJP	REVISED -	
PLOT DATE = 7/3/2014	DATE - 6/30/2014	REVISED -	

STATE OF ILLINOIS
DEPARTMENT OF TRANSPORTATION

WASHINGTON STREET FROM HARYAN WAY TO LAKE STREET
WASHINGTON STREET CROSS SECTIONS

SCALE: | SHEET NO. OF SHEETS | STA. 112+00.00 TO STA. 112+00.00

F.A.U RTE.	SECTION	COUNTY	TOTAL SHEETS	SHEET NO.
187	11-00121-11-BR	LAKE	496	375

CONTRACT NO. 61A63

ILLINOIS FED. AID PROJECT

G:\LCDOT\21150_004\Drawings\shts\Xsec\S_XS_Wash_21150_004.dgn

		STAGE 1	STAGE 2	STAGE 3
112+50.00	UNSUITABLE	0.00	106.31	0.00
	EXCAVATION	0.00	815.36	0.00
	EMBANKMENT	0.00	3.01	0.00

ALL UNITS ARE SQ FT

LEGEND

- TEMPORARY PAVEMENT BY OTHERS
- STRUCTURAL EXCAVATION
- BRACED EXCAVATION

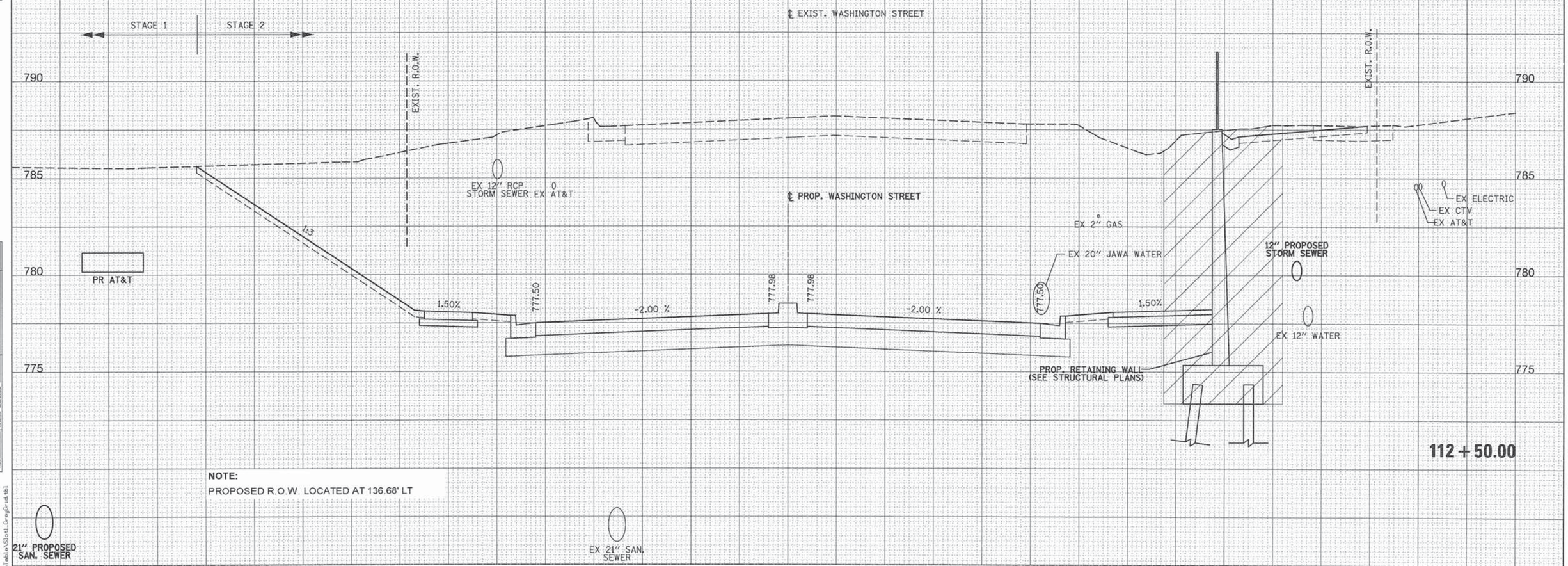

NOTE:
PROPOSED R.O.W. LOCATED AT 136.68' LT

FINAL SURVEY	BY	DATE
NOTE BOOK		
NO.		
SURVEYED		
PLOTTED		
TEMPLATE		
AREAS		
AREAS CHECKED		

ORIGINAL SURVEY	BY	DATE
NOTE BOOK		
NO.		
SURVEYED		
PLOTTED		
TEMPLATE		
AREAS		
AREAS CHECKED		

PATRICK ENGINEERING INC.
4970 VARSITY DRIVE
LISLE, IL 60532
patrickengineering.com
PATRICK ENGINEERING

USER NAME = tkoeppen(Rdwy_Lisle)	DESIGNED - MJV	REVISED -	
	DRAWN - MJV	REVISED -	
PLOT SCALE = 10.0000 ' / in.	CHECKED - MJP	REVISED -	
PLOT DATE = 7/3/2014	DATE - 6/30/2014	REVISED -	

STATE OF ILLINOIS
DEPARTMENT OF TRANSPORTATION

WASHINGTON STREET FROM HARYAN WAY TO LAKE STREET
WASHINGTON STREET CROSS SECTIONS

SCALE: | SHEET NO. OF SHEETS | STA. 112+50.00 TO STA. 112+50.00

F.A.U RTE.	SECTION	COUNTY	TOTAL SHEETS	SHEET NO.
187	11-00121-11-BR	LAKE	496	376

CONTRACT NO. 61A63

ILLINOIS FED. AID PROJECT

PENTABLE = ...\PenTable\Slot1_GreyGrid.tbl

G:\LCDOT\21150_024\Drawings\shts\Xsec\S_XS_Wash_21150_024.dgn

		STAGE 1	STAGE 2	STAGE 3
113+00.00	UNSUITABLE	0.00	153.80	0.00
	EXCAVATION	0.00	963.19	0.00
	EMBANKMENT	0.00	1.20	0.00

ALL UNITS ARE SQ FT

LEGEND

- TEMPORARY PAVEMENT BY OTHERS
- STRUCTURAL EXCAVATION
- BRACED EXCAVATION

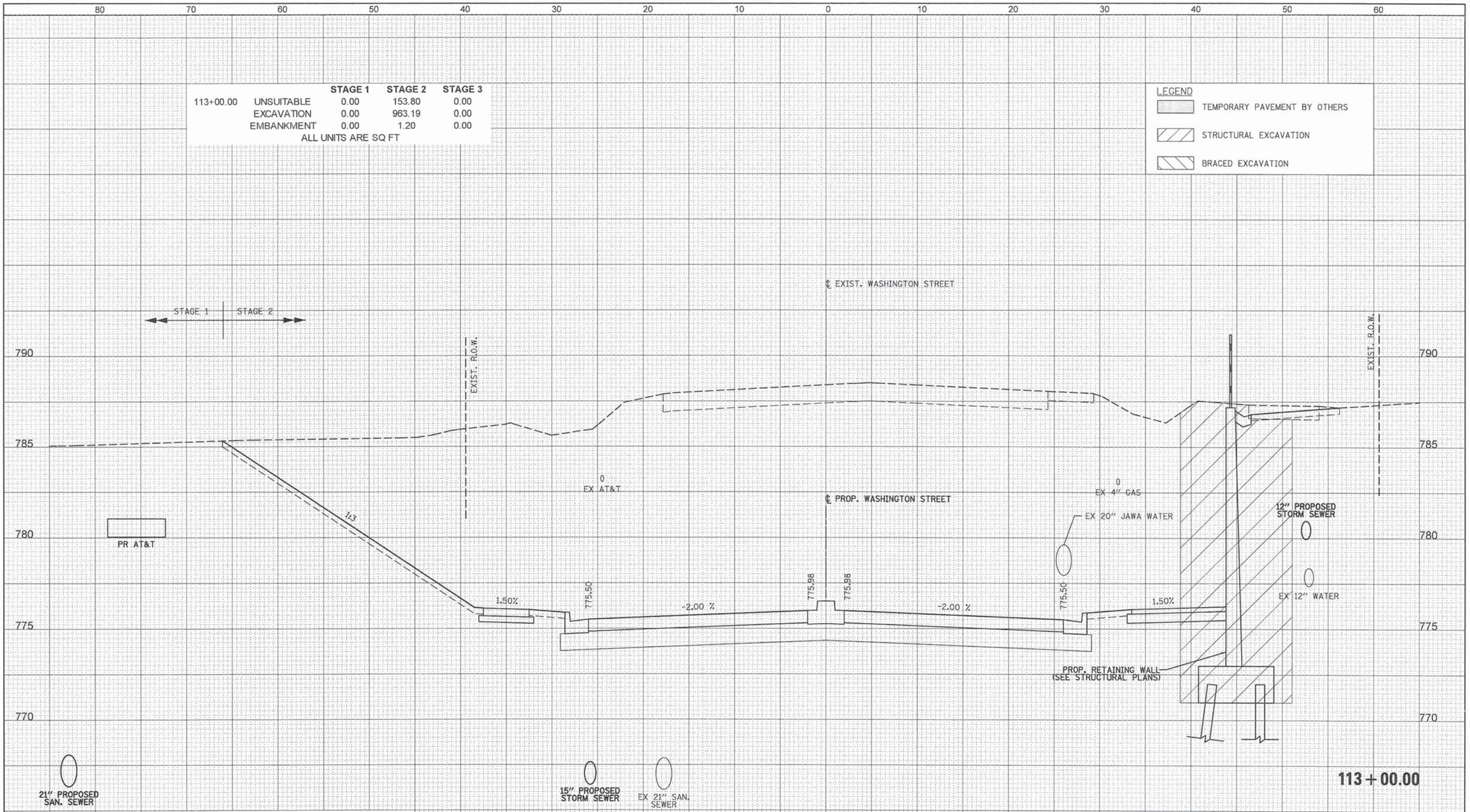

NOTE:

PROPOSED R.O.W. LOCATED AT 150.94' LT

FINAL SURVEY — NOTE BOOK NO. — SURVEYED — PLOTTED — TEMPLATE — AREAS — AREAS CHECKED — BY — DATE

ORIGINAL SURVEY — NOTE BOOK NO. — SURVEYED — PLOTTED — TEMPLATE — AREAS — AREAS CHECKED — BY — DATE

PENTABLE = ...\PenTable\Slo1_GrayGrid.tbl

G:\LCDOT\21150_004\Drawings\shts\Xsec\S_XS_Wash_21150_004.dgn

PATRICK ENGINEERING INC.
4970 VARSITY DRIVE
LISLE, IL 60532
patrickengineering.com
PATRICK ENGINEERING

USER NAME = tkoeppen(Rdwy_Lisle)	DESIGNED - MJV	REVISED -	
	DRAWN - MJV	REVISED -	
PLOT SCALE = 10.0000 ' / in.	CHECKED - MJP	REVISED -	
PLOT DATE = 7/3/2014	DATE - 6/30/2014	REVISED -	

STATE OF ILLINOIS
DEPARTMENT OF TRANSPORTATION

WASHINGTON STREET FROM HARYAN WAY TO LAKE STREET
WASHINGTON STREET CROSS SECTIONS

SCALE: | SHEET NO. OF SHEETS | STA. 113+00.00 TO STA. 113+00.00

F.A.U RTE.	SECTION	COUNTY	TOTAL SHEETS	SHEET NO.
187	11-00121-11-BR	LAKE	496	377

CONTRACT NO. 61A63

ILLINOIS FED. AID PROJECT

		STAGE 1	STAGE 2	STAGE 3
113+50.00	UNSUITABLE	0.00	167.12	0.00
	EXCAVATION	0.00	1174.89	0.00
	EMBANKMENT	0.00	2.25	0.00

ALL UNITS ARE SQ FT

LEGEND

- TEMPORARY PAVEMENT BY OTHERS
- STRUCTURAL EXCAVATION
- BRACED EXCAVATION

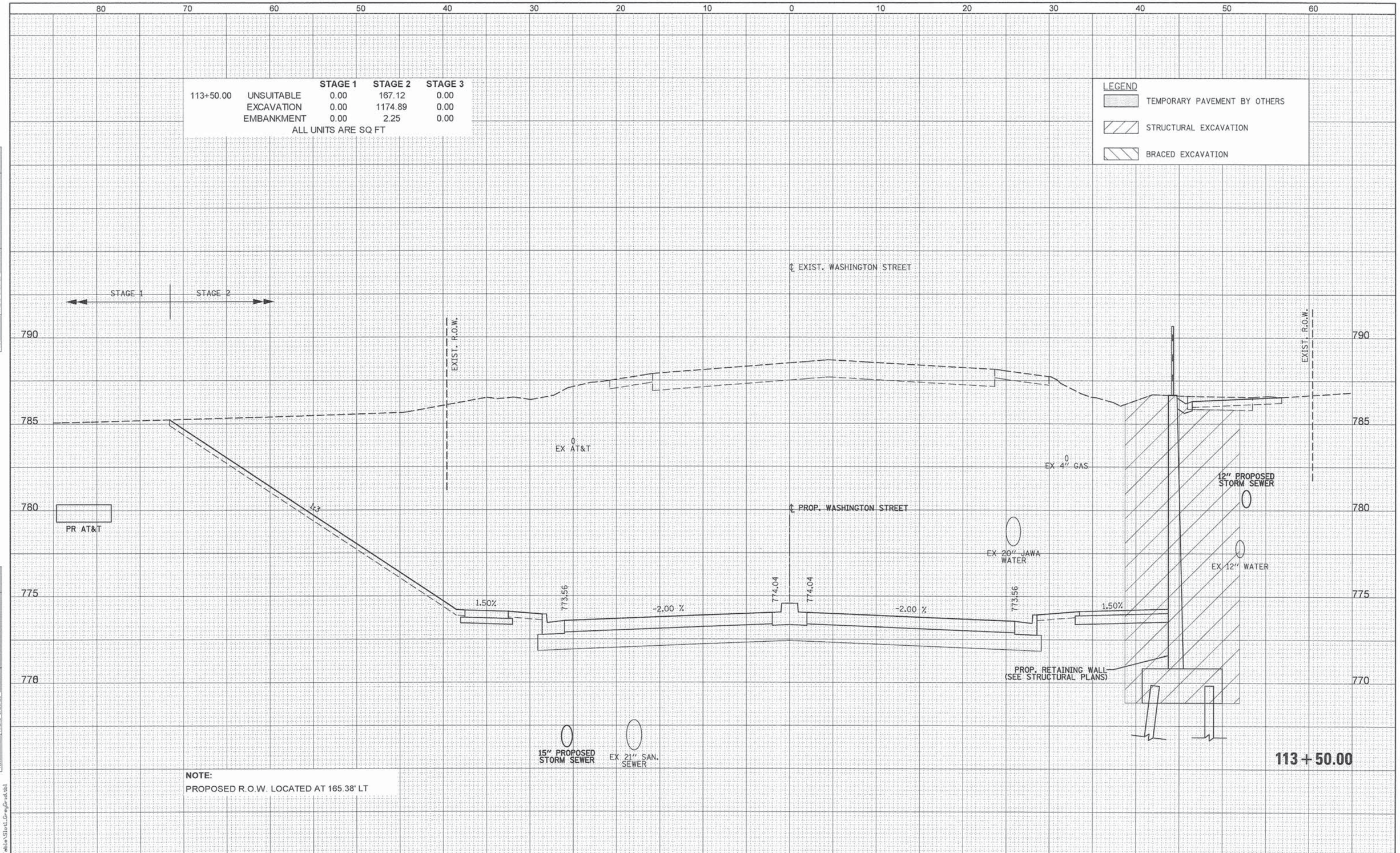

NOTE:

PROPOSED R.O.W. LOCATED AT 165.38' LT

FINAL SURVEY	BY	DATE
NOTE BOOK	SURVEYED	
NO.	PLOTTED	
	TEMPLATE	
	AREAS	
	AREAS CHECKED	

ORIGINAL SURVEY	BY	DATE
NOTE BOOK	SURVEYED	
NO.	PLOTTED	
	TEMPLATE	
	AREAS	
	AREAS CHECKED	

PENTABLE = ...\PenTables\Slot1_GreyGrad.tbl

PATRICK ENGINEERING INC.
4970 VARSITY DRIVE
LISLE, IL 60532
patrickengineering.com

USER NAME = tkoeppen(Rdwy_Lisle)	DESIGNED - MJV	REVISED -	
	DRAWN - MJV	REVISED -	
PLOT SCALE = 10.0000 ' / in.	CHECKED - MJP	REVISED -	
PLOT DATE = 7/3/2014	DATE - 6/30/2014	REVISED -	

STATE OF ILLINOIS
DEPARTMENT OF TRANSPORTATION

WASHINGTON STREET FROM HARYAN WAY TO LAKE STREET
WASHINGTON STREET CROSS SECTIONS

SCALE: | SHEET NO. OF SHEETS | STA. 113+50.00 TO STA. 113+50.00

F.A.U RTE.	SECTION	COUNTY	TOTAL SHEETS	SHEET NO.
187	11-00121-11-BR	LAKE	496	378

CONTRACT NO. 61A63

ILLINOIS FED. AID PROJECT

G:\LCDOT\21150.004\Drawings\shts\Xsec\S_XS_Wash_21150.004.dgn

		STAGE 1	STAGE 2	STAGE 3
114+00.00	UNSUITABLE	0.00	170.50	0.00
	EXCAVATION	0.00	1338.79	0.00
	EMBANKMENT	0.00	4.62	0.00

ALL UNITS ARE SQ FT

LEGEND

- TEMPORARY PAVEMENT BY OTHERS
- STRUCTURAL EXCAVATION
- BRACED EXCAVATION

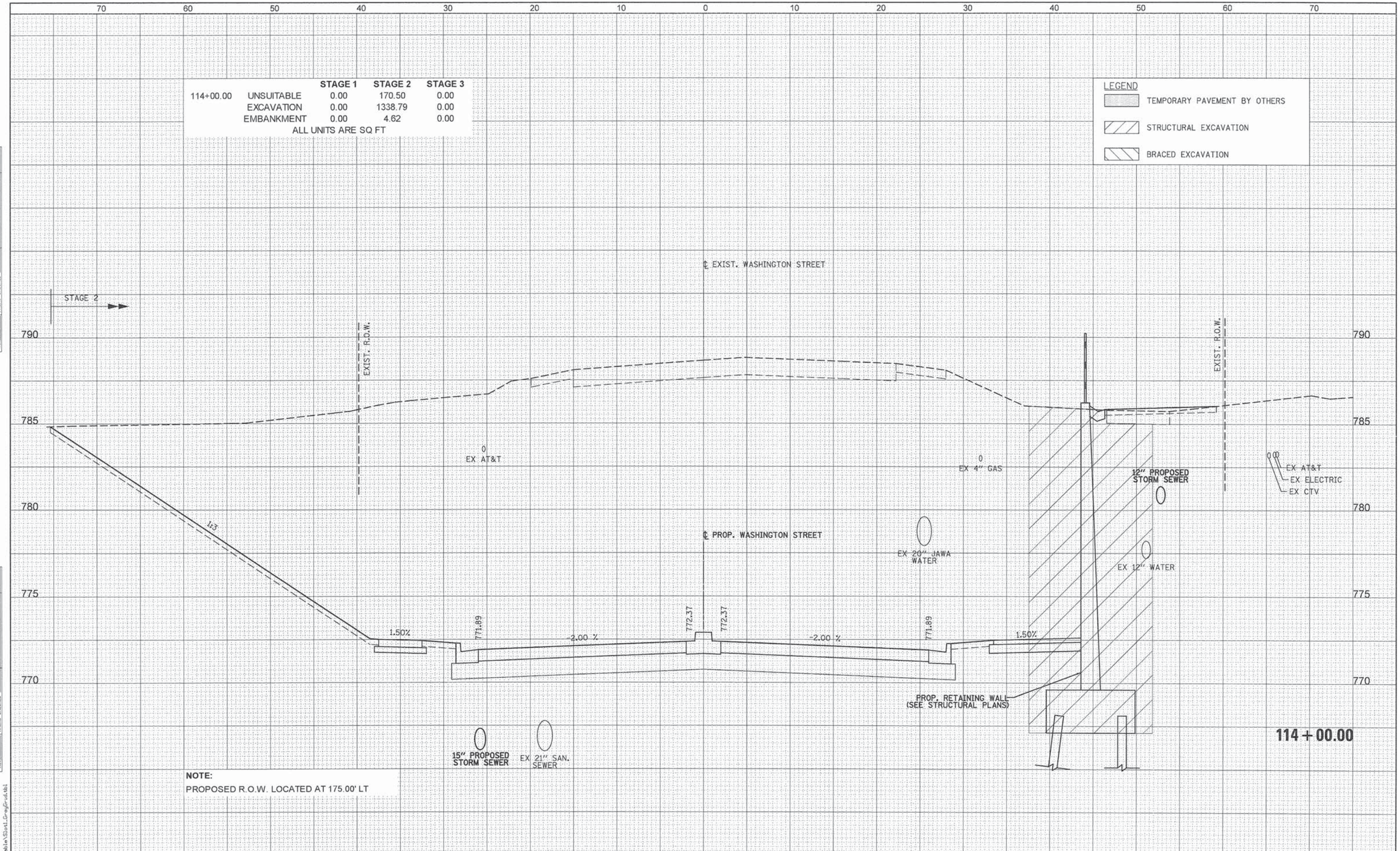

NOTE:

PROPOSED R.O.W. LOCATED AT 175.00' LT

FINAL SURVEY — NOTE BOOK NO. — SURVEYED / PLOTTED / TEMPLATE / AREAS / AREAS CHECKED — BY — DATE

ORIGINAL SURVEY — NOTE BOOK NO. — SURVEYED / PLOTTED / TEMPLATE / AREAS / AREAS CHECKED — BY — DATE

PATRICK ENGINEERING INC.
4970 VARSITY DRIVE
LISLE, IL 60532
patrickengineering.com

USER NAME = tkoeppen(Rdwy_Lisle)	DESIGNED - MJV	REVISED -	
	DRAWN - MJV	REVISED -	
PLOT SCALE = 10.0000 ' / in.	CHECKED - MJP	REVISED -	
PLOT DATE = 7/3/2014	DATE - 6/30/2014	REVISED -	

STATE OF ILLINOIS
DEPARTMENT OF TRANSPORTATION

WASHINGTON STREET FROM HARYAN WAY TO LAKE STREET
WASHINGTON STREET CROSS SECTIONS

SCALE: | SHEET NO. OF SHEETS | STA. 114+00.00 TO STA. 114+00.00

F.A.U RTE.	SECTION	COUNTY	TOTAL SHEETS	SHEET NO.
187	11-00121-11-BR	LAKE	496	379

CONTRACT NO. 61A63

ILLINOIS FED. AID PROJECT

PENTABLE = ...\Pentable\Slot1_GrayGrid.tbl

Q:\LCDOT\21150.004\Drawings\shts\Xsec\S_XS_Wash_21150.004.dgn

		STAGE 1	STAGE 2	STAGE 3
114+50.00	UNSUITABLE	0.00	370.62	27.28
	EXCAVATION	0.00	1284.95	13.40
	EMBANKMENT	0.00	3.18	4.92

ALL UNITS ARE SQ FT

LEGEND

- TEMPORARY PAVEMENT BY OTHERS
- STRUCTURAL EXCAVATION
- BRACED EXCAVATION

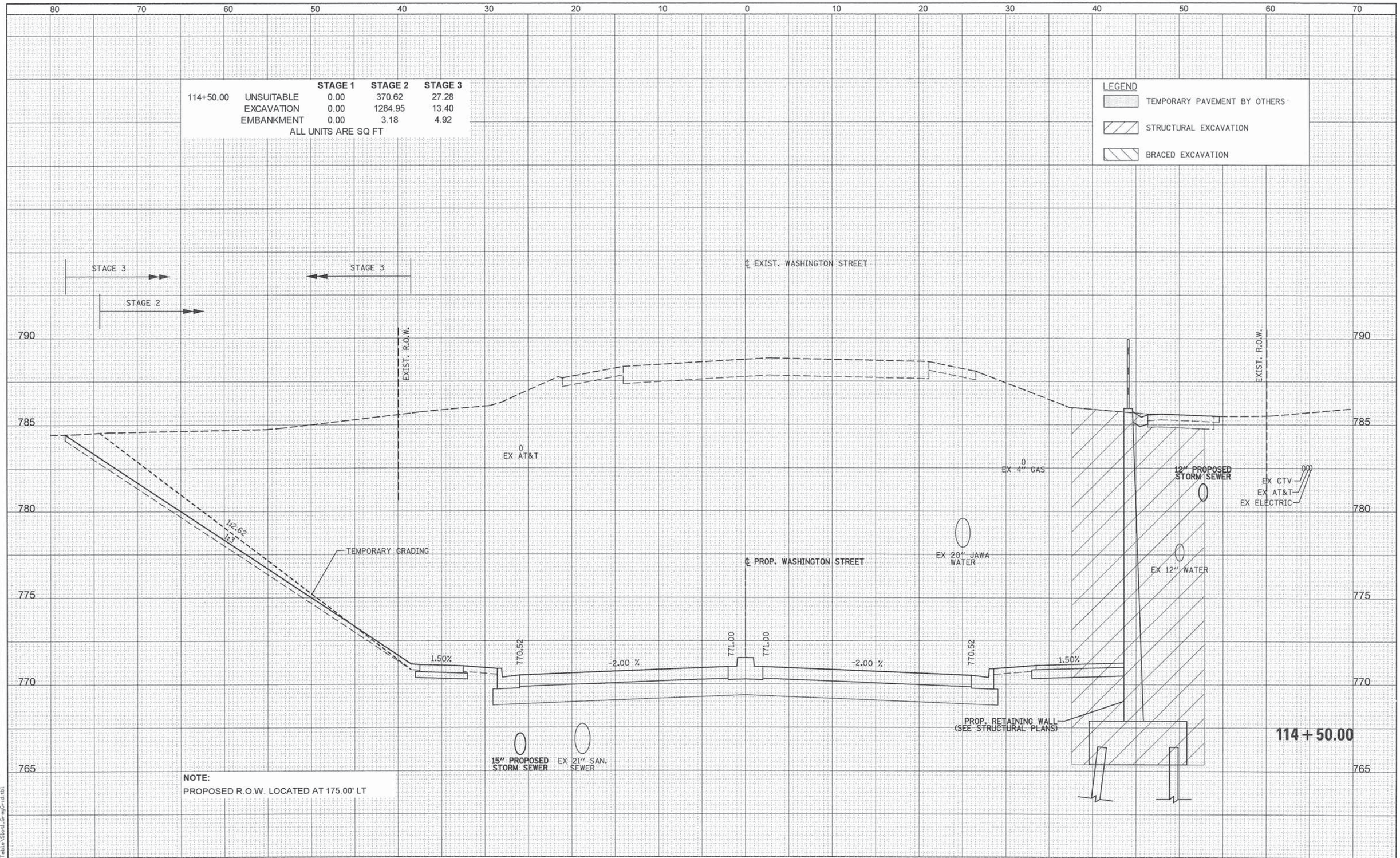

NOTE:
PROPOSED R.O.W. LOCATED AT 175.00' LT

FINAL SURVEY	BY	DATE
SURVEYED		
PLOTTED		
TEMPLATE		
AREAS		
AREAS CHECKED		
NOTE BOOK NO.		

ORIGINAL SURVEY	BY	DATE
SURVEYED		
PLOTTED		
TEMPLATE		
AREAS		
AREAS CHECKED		
NOTE BOOK NO.		

PATRICK ENGINEERING INC.
4970 VARSITY DRIVE
LISLE, IL 60532
patrickengineering.com
PATRICK ENGINEERING

USER NAME = tkoeppen(Rdwy_Lisle)	DESIGNED - MJV	REVISED -	
	DRAWN - MJV	REVISED -	
PLOT SCALE = 10.0000 ' / in.	CHECKED - MJP	REVISED -	
PLOT DATE = 7/3/2014	DATE - 6/30/2014	REVISED -	

STATE OF ILLINOIS
DEPARTMENT OF TRANSPORTATION

WASHINGTON STREET FROM HARYAN WAY TO LAKE STREET
WASHINGTON STREET CROSS SECTIONS

SCALE: | SHEET NO. OF SHEETS | STA. 114+50.00 TO STA. 114+50.00

F.A.U RTE.	SECTION	COUNTY	TOTAL SHEETS	SHEET NO.
187	11-00121-11-BR	LAKE	496	380

CONTRACT NO. 61A63

ILLINOIS FED. AID PROJECT

PENTABLE = ...\PenTable\Sled_GrayGrid.tbl

Q:\LCDOT\21150_004\Drawings\shts\Xsec\S_XS_Wash_21150_004.dgn

		STAGE 1	STAGE 2	STAGE 3
115+00.00	UNSUITABLE	0.00	365.53	30.03
	EXCAVATION	0.00	1428.10	38.94
	EMBANKMENT	0.00	3.08	3.82

ALL UNITS ARE SQ FT

LEGEND

- TEMPORARY PAVEMENT BY OTHERS
- STRUCTURAL EXCAVATION
- BRACED EXCAVATION

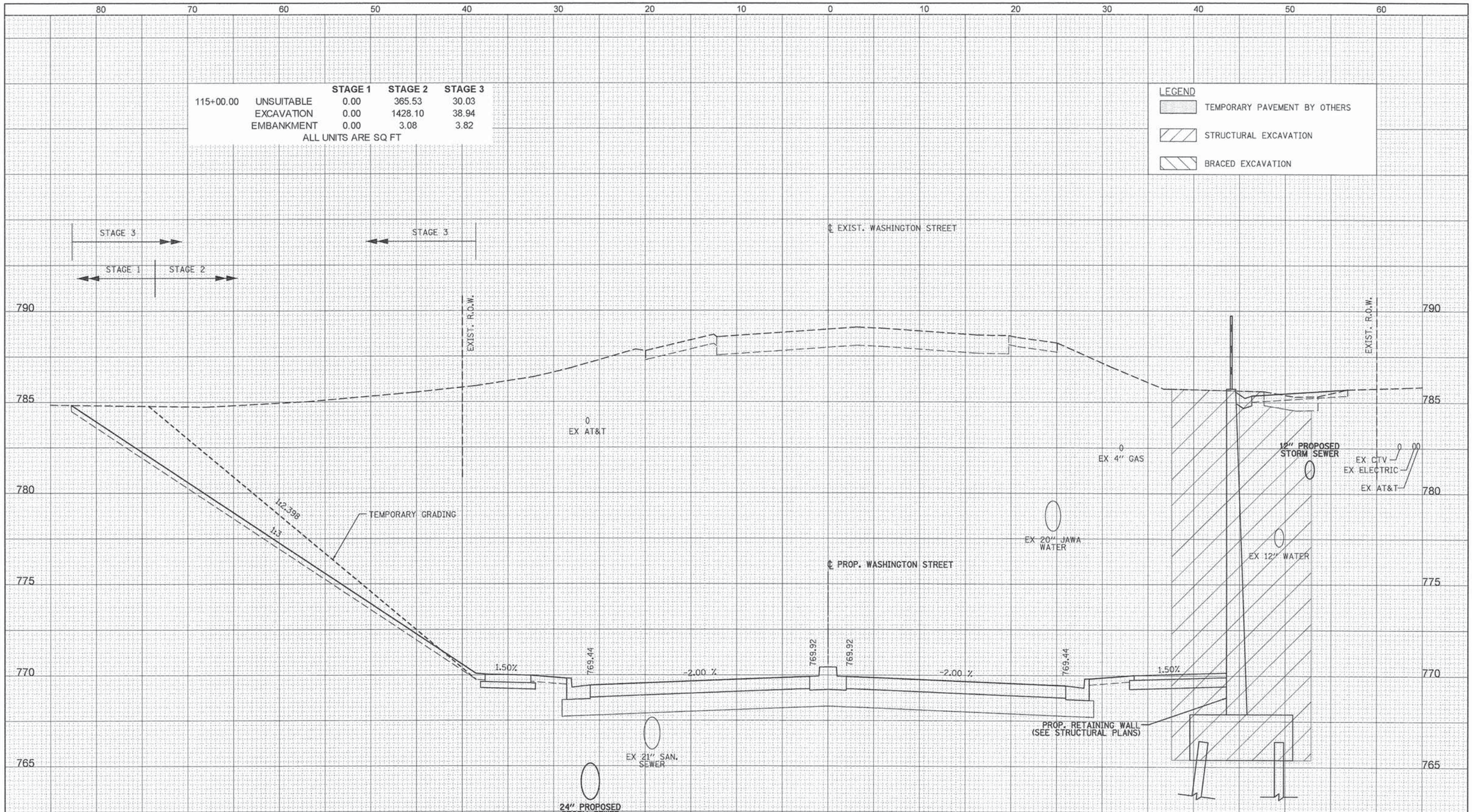

NOTE:
PROPOSED R.O.W. LOCATED AT 175.00' LT

FINAL SURVEY	BY	DATE
NOTE BOOK NO.	SURVEYED	
	PLOTTED	
	TEMPLATE	
	AREAS	
	AREAS CHECKED	

ORIGINAL SURVEY	BY	DATE
NOTE BOOK NO.	SURVEYED	
	PLOTTED	
	TEMPLATE	
	AREAS	
	AREAS CHECKED	

PENTABLE = ...\PenTables\Slat1_Greg&Grad.tbl

Q:\LCDOT\21150.004\Drawings\shts\Xsec\S_XS_Wash_21150.004.dgn

PATRICK ENGINEERING INC.
4970 VARSITY DRIVE
LISLE, IL 60532
patrickengineering.com
PATRICK ENGINEERING

USER NAME = tkoeppen(Rdwy_Lisle)	DESIGNED - MJV	REVISED -	
	DRAWN - MJV	REVISED -	
PLOT SCALE = 10.0000 ' / in.	CHECKED - MJP	REVISED -	
PLOT DATE = 7/3/2014	DATE - 6/30/2014	REVISED -	

STATE OF ILLINOIS
DEPARTMENT OF TRANSPORTATION

WASHINGTON STREET FROM HARYAN WAY TO LAKE STREET
WASHINGTON STREET CROSS SECTIONS

SCALE: | SHEET NO. OF SHEETS | STA. 115+00.00 TO STA. 115+00.00

F.A.U RTE.	SECTION	COUNTY	TOTAL SHEETS	SHEET NO.
187	11-00121-11-BR	LAKE	496	381

CONTRACT NO. 61A63

ILLINOIS FED. AID PROJECT

		STAGE 1	STAGE 2	STAGE 3
115+45.53	UNSUITABLE	0.00	371.84	0.00
	EXCAVATION	0.00	1383.89	0.00
	EMBANKMENT	0.00	4.89	0.00

ALL UNITS ARE SQ FT

LEGEND

- TEMPORARY PAVEMENT BY OTHERS
- STRUCTURAL EXCAVATION
- BRACED EXCAVATION

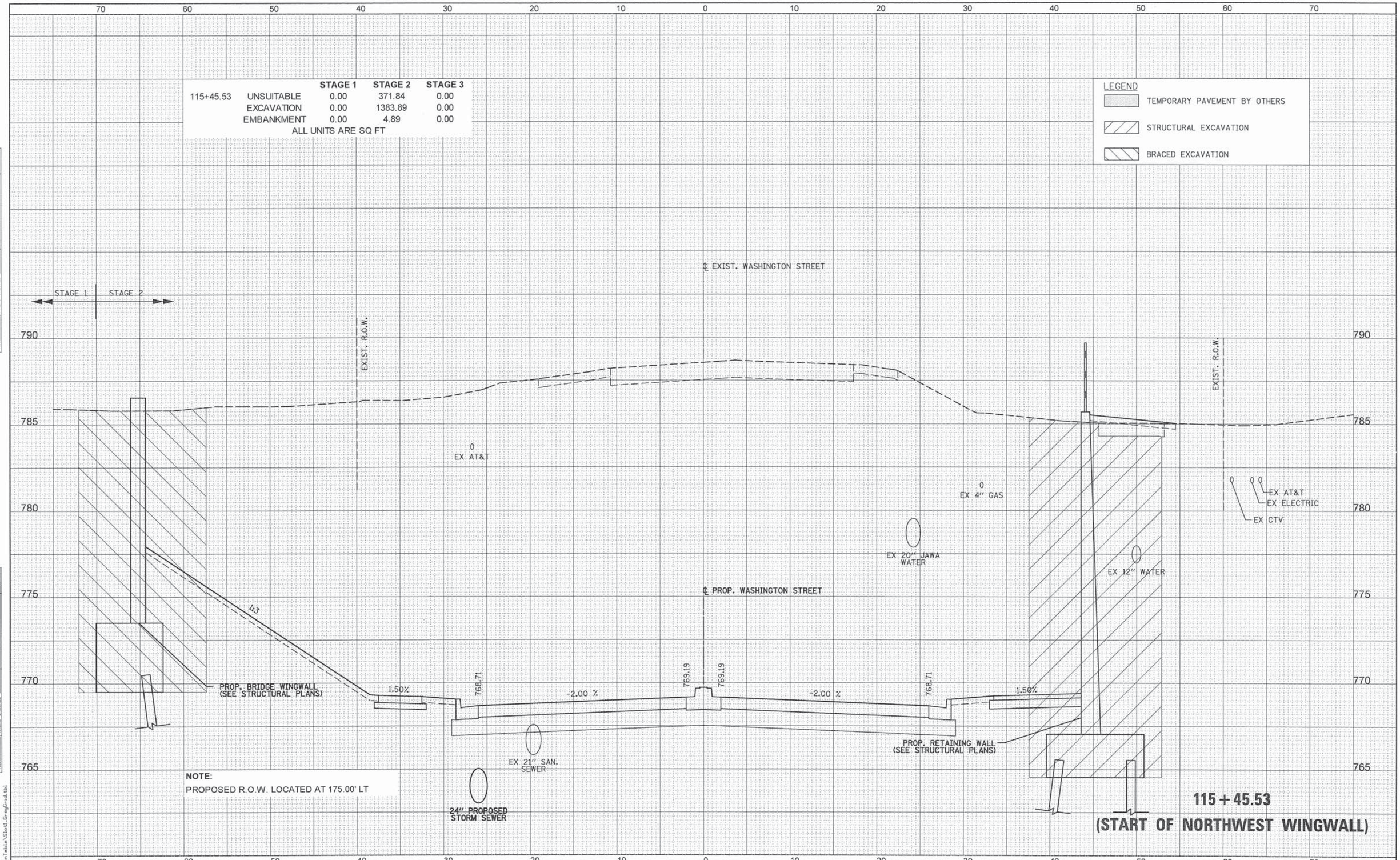

NOTE:
PROPOSED R.O.W. LOCATED AT 175.00' LT

FINAL SURVEY	BY	DATE
SURVEYED		
PLOTTED		
TEMPLATE		
AREAS		
AREAS CHECKED		
NOTE BOOK		
NO.		

ORIGINAL SURVEY	BY	DATE
SURVEYED		
PLOTTED		
TEMPLATE		
AREAS		
AREAS CHECKED		
NOTE BOOK		
NO.		

PATRICK ENGINEERING INC.
4970 VARSITY DRIVE
LISLE, IL 60532
patrickengineering.com
PATRICK ENGINEERING

USER NAME = tkoeppen(Rdwy_Lisle)	DESIGNED - MJV	REVISED -	
	DRAWN - MJV	REVISED -	
PLOT SCALE = 10.0000 ' / in.	CHECKED - MJP	REVISED -	
PLOT DATE = 7/3/2014	DATE - 6/30/2014	REVISED -	

STATE OF ILLINOIS
DEPARTMENT OF TRANSPORTATION

WASHINGTON STREET FROM HARYAN WAY TO LAKE STREET
WASHINGTON STREET CROSS SECTIONS

SCALE: | SHEET NO. OF SHEETS | STA. 115+45.53 TO STA. 115+45.53

F.A.U RTE.	SECTION	COUNTY	TOTAL SHEETS	SHEET NO.
187	11-00121-11-BR	LAKE	496	382

CONTRACT NO. 61A63

ILLINOIS FED. AID PROJECT

PENTABLE = ...\Pentable\Slot1_Grey&rid.tbl

G:\LCDOT\21150_004\Drawings\shts\Xsec\S_XS_Wash_21150_004.dgn

		STAGE 1	STAGE 2	STAGE 3
115+77.60	UNSUITABLE	0.00	241.35	0.00
	EXCAVATION	0.00	1109.90	0.00
	EMBANKMENT	0.00	6.04	0.00

ALL UNITS ARE SQ FT

LEGEND
- TEMPORARY PAVEMENT BY OTHERS
- STRUCTURAL EXCAVATION
- BRACED EXCAVATION

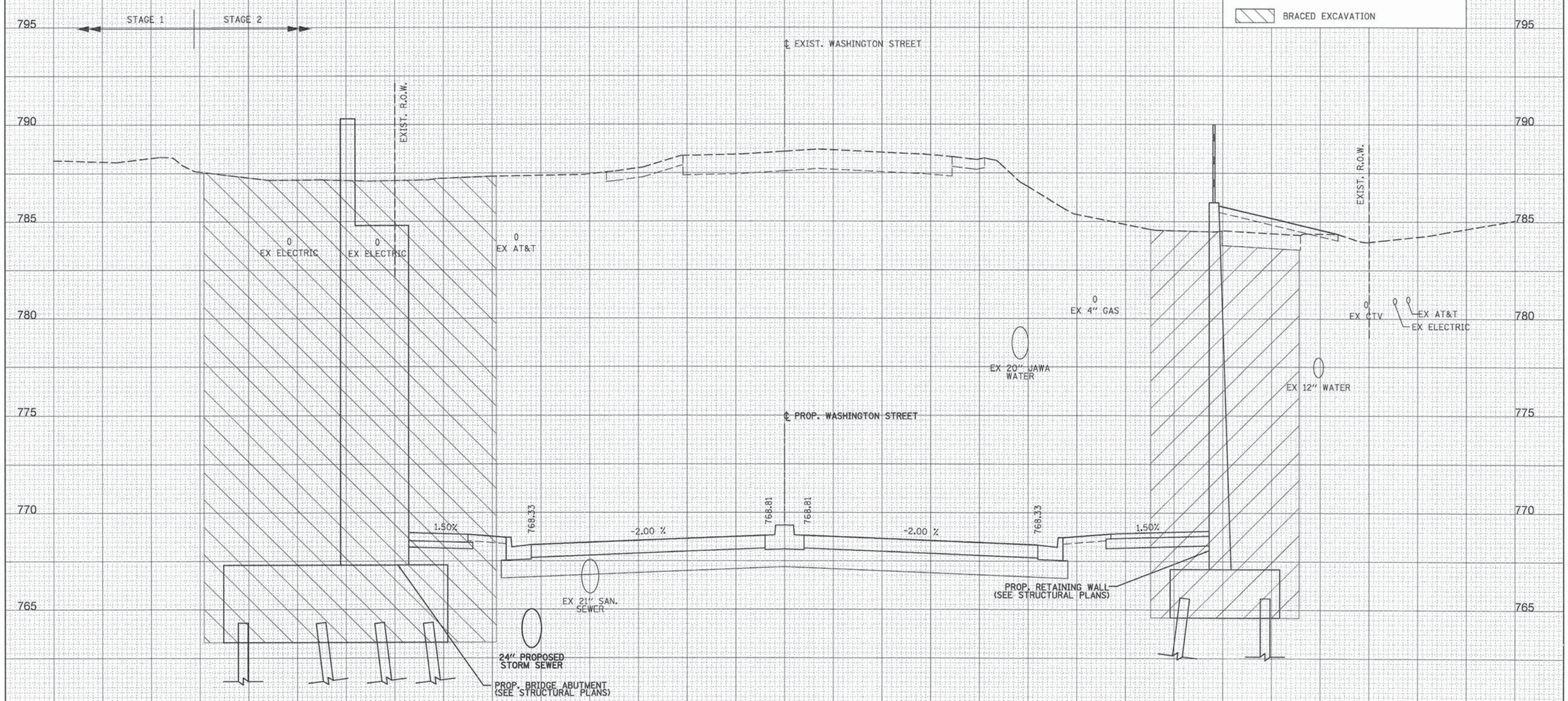

NOTE:

PROPOSED R.O.W. LOCATED AT 175.00' LT

115 + 77.60

(START OF NORTH ABUTMENT)

FINAL SURVEY	BY	DATE
SURVEYED		
PLOTTED		
TEMPLATE		
AREAS		
AREAS CHECKED		
NOTE BOOK		
NO.		

ORIGINAL SURVEY	BY	DATE
SURVEYED		
PLOTTED		
TEMPLATE		
AREAS		
AREAS CHECKED		
NOTE BOOK		
NO.		

PATRICK ENGINEERING INC.
4970 VARSITY DRIVE
LISLE, IL 60532
patrickengineering.com

USER NAME = tkoeppen(Rdwy_Lisle)	DESIGNED - MJV	REVISED -	
	DRAWN - MJV	REVISED -	
PLOT SCALE = 10.0000 ' / in.	CHECKED - MJP	REVISED -	
PLOT DATE = 7/3/2014	DATE - 6/30/2014	REVISED -	

STATE OF ILLINOIS
DEPARTMENT OF TRANSPORTATION

WASHINGTON STREET FROM HARYAN WAY TO LAKE STREET
WASHINGTON STREET CROSS SECTIONS

SCALE: | SHEET NO. OF SHEETS | STA. 115+77.60 TO STA. 115+77.60

F.A.U RTE.	SECTION	COUNTY	TOTAL SHEETS	SHEET NO.
187	11-00121-11-BR	LAKE	496	383

CONTRACT NO. 61A63

ILLINOIS FED. AID PROJECT

PENTABLE = ...\PenTable\Slot1.GrayGrid.tbl

Q:\LCDOT\21150.004\Drawings\shts\Xsec\S_XS_Wash_21150.004.dgn

		STAGE 1	STAGE 2	STAGE 3
116+28.84	UNSUITABLE	0.00	193.82	0.00
	EXCAVATION	0.00	1158.55	0.00
	EMBANKMENT	0.00	0.00	0.00

ALL UNITS ARE SQ FT

LEGEND
- TEMPORARY PAVEMENT BY OTHERS
- STRUCTURAL EXCAVATION
- BRACED EXCAVATION

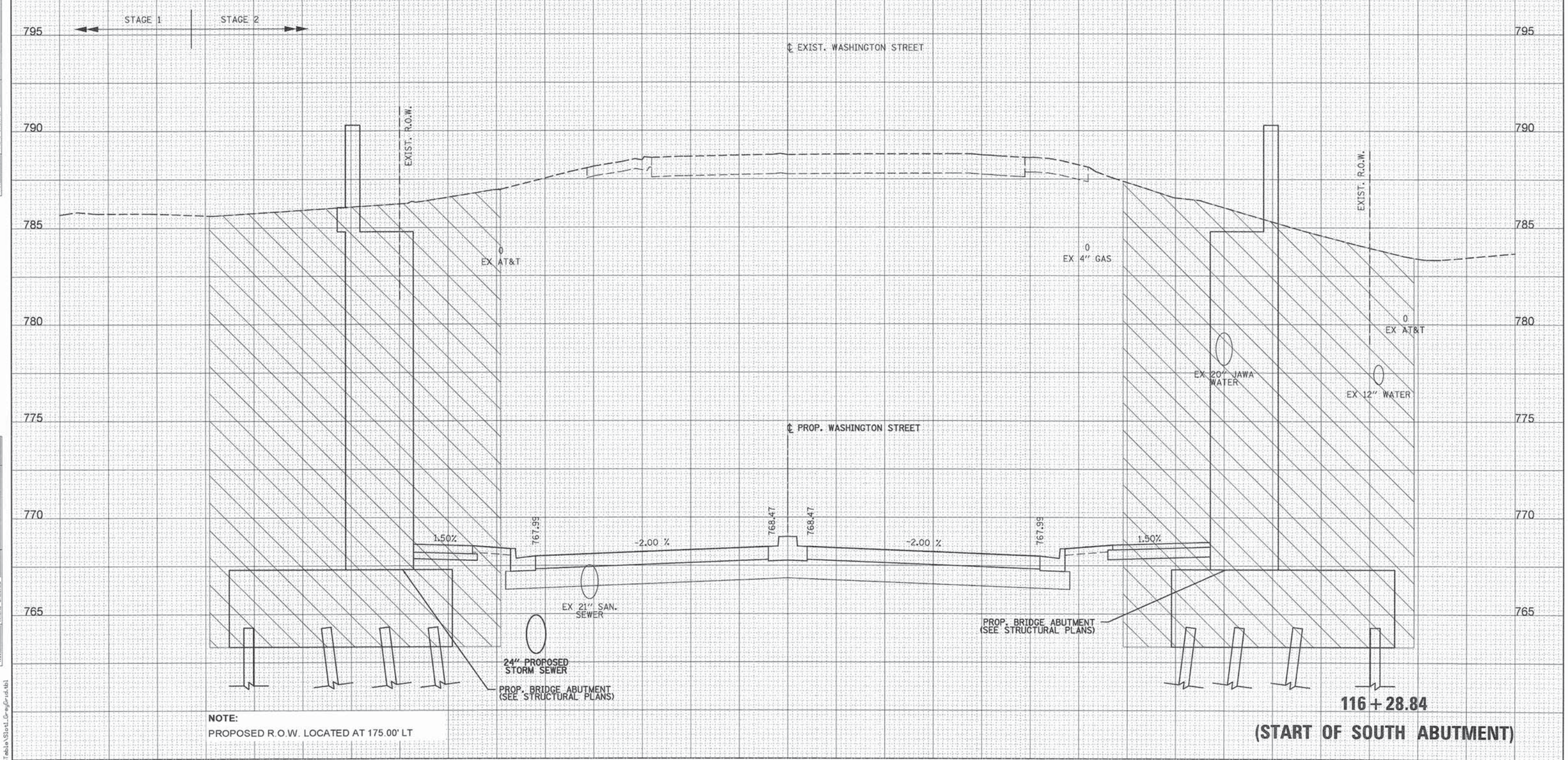

NOTE:
PROPOSED R.O.W. LOCATED AT 175.00' LT

FINAL SURVEY	BY	DATE
SURVEYED		
PLOTTED		
TEMPLATE		
AREAS		
AREAS CHECKED		
NOTE BOOK NO.		

ORIGINAL SURVEY	BY	DATE
SURVEYED		
PLOTTED		
TEMPLATE		
AREAS		
AREAS CHECKED		
NOTE BOOK NO.		

PATRICK ENGINEERING INC.
4970 VARSITY DRIVE
LISLE, IL 60532
patrickengineering.com
PATRICK ENGINEERING

USER NAME = tkoeppen(Rdwy_Lisle)	DESIGNED - MJV	REVISED -	
	DRAWN - MJV	REVISED -	
PLOT SCALE = 10.0000 ' / in.	CHECKED - MJP	REVISED -	
PLOT DATE = 7/3/2014	DATE - 6/30/2014	REVISED -	

STATE OF ILLINOIS
DEPARTMENT OF TRANSPORTATION

WASHINGTON STREET FROM HARYAN WAY TO LAKE STREET
WASHINGTON STREET CROSS SECTIONS

SCALE: | SHEET NO. OF SHEETS | STA. 116+28.84 TO STA. 116+28.84

F.A. RTE.	SECTION	COUNTY	TOTAL SHEETS	SHEET NO.
187	11-00121-11-BR	LAKE	496	384

CONTRACT NO. 61A63
ILLINOIS FED. AID PROJECT

PENTABLE = ...\PenTable\Slot_GreyGrid.tbl
G:\LCDOT\21150_004\Drawings\shts\Xsec\S_XS_Wash_21150_004.dgn

		STAGE 1	STAGE 2	STAGE 3
116+48.60	UNSUITABLE	0.00	204.91	0.00
	EXCAVATION	0.00	1147.06	0.00
	EMBANKMENT	0.00	0.00	0.00

ALL UNITS ARE SQ FT

LEGEND

- TEMPORARY PAVEMENT BY OTHERS
- STRUCTURAL EXCAVATION
- BRACED EXCAVATION

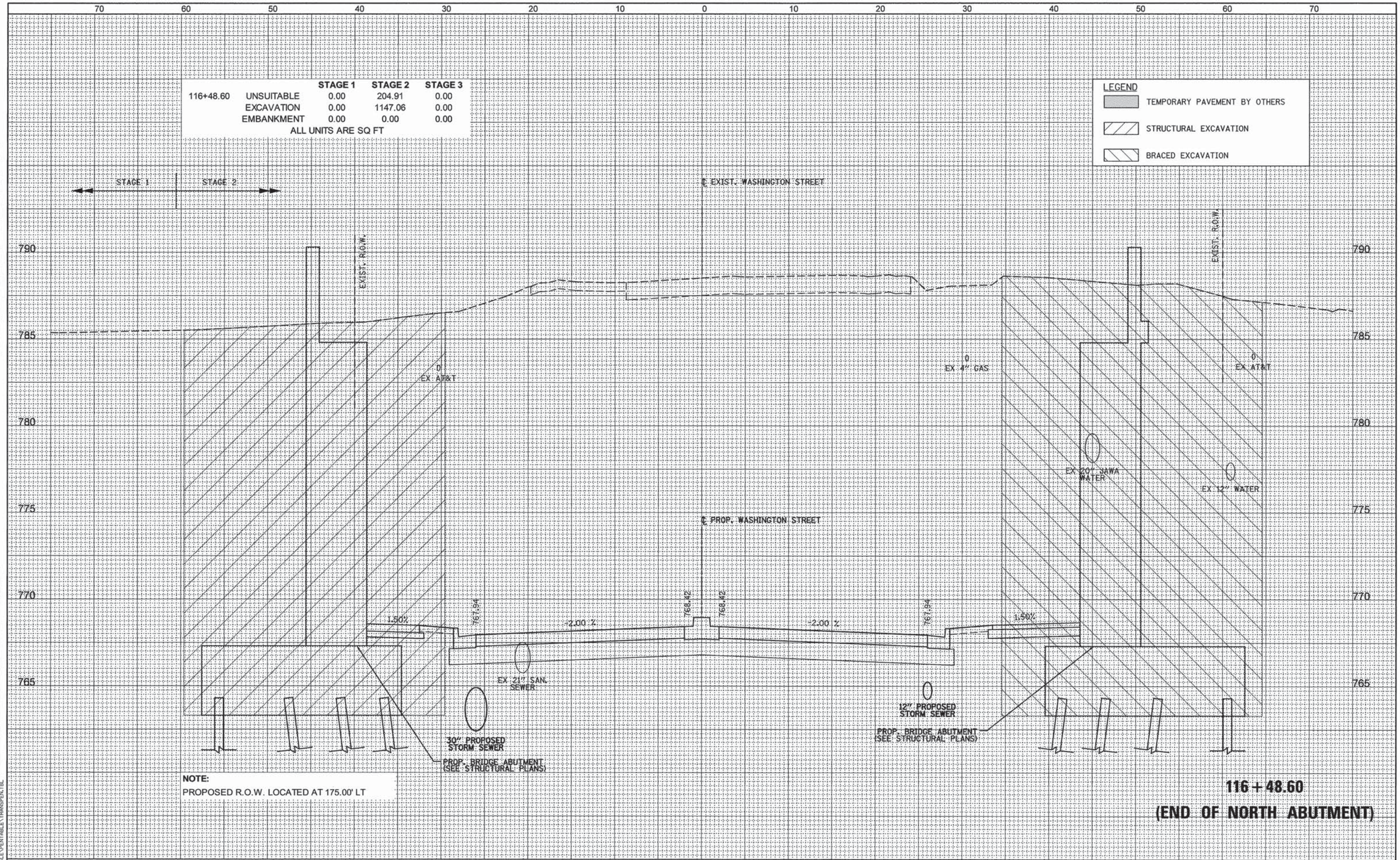

NOTE:
PROPOSED R.O.W. LOCATED AT 175.00' LT

116 + 48.60

(END OF NORTH ABUTMENT)

FINAL SURVEY	BY	DATE
SURVEYED		
PLOTTED		
TEMPLATE		
AREAS		
AREAS CHECKED		
NOTE BOOK NO.		

ORIGINAL SURVEY	BY	DATE
SURVEYED		
PLOTTED		
TEMPLATE		
AREAS		
AREAS CHECKED		
NOTE BOOK NO.		

PENTABLE = ...\LISLE\PENTABLE\TRANSPEN.TBL

PATRICK ENGINEERING INC.
4970 VARSITY DRIVE
LISLE, IL 60532
patrickengineering.com
PATRICK ENGINEERING

USER NAME = mvasek(Rdwy_Lisle)	DESIGNED - MJV	REVISED - 10/7/2014
	DRAWN - MJV	REVISED -
PLOT SCALE = 5.0000 ' / IN.	CHECKED - MJP	REVISED -
PLOT DATE = 10/7/2014	DATE - 6/30/2014	REVISED -

STATE OF ILLINOIS
DEPARTMENT OF TRANSPORTATION

WASHINGTON STREET FROM HARYAN WAY TO LAKE STREET
WASHINGTON STREET CROSS SECTIONS

SCALE: | SHEET NO. OF SHEETS | STA. 116+48.60 TO STA. 116+48.60

F.A.U RTE.	SECTION	COUNTY	TOTAL SHEETS	SHEET NO.
187	11-00121-11-BR	LAKE	496	385
		CONTRACT NO. 61A63		
		ILLINOIS FED. AID PROJECT		

Q:\LCDOT\21150.004\Drawings\shts\Xsec\S_XS_Wash_21150.004.dgn

		STAGE 1	STAGE 2	STAGE 3
116+68.57	UNSUITABLE	0.00	225.63	0.00
	EXCAVATION	0.00	1442.32	0.00
	EMBANKMENT	0.00	0.00	0.00

ALL UNITS ARE SQ FT

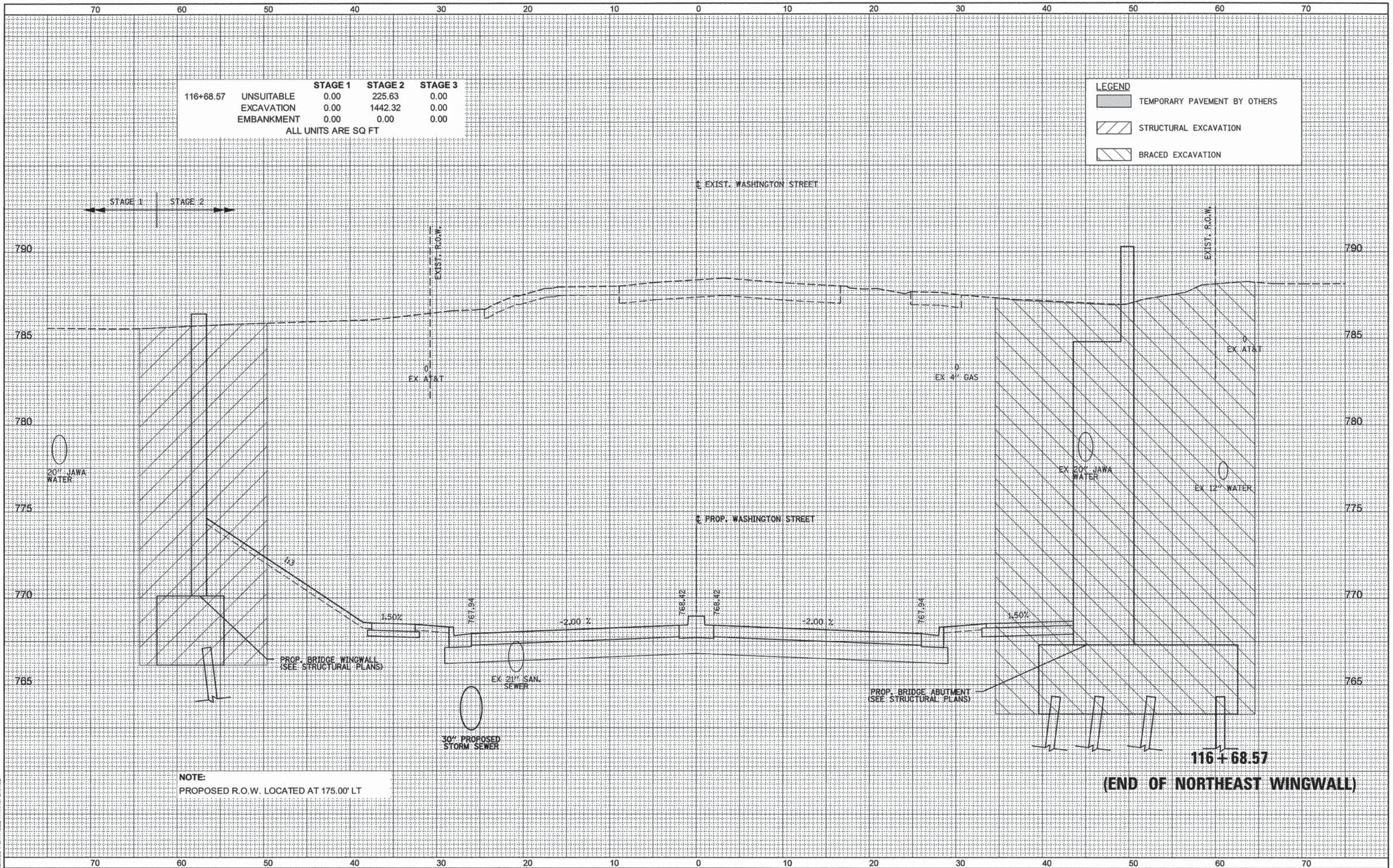

NOTE:
PROPOSED R.O.W. LOCATED AT 175.00' LT

FINAL SURVEY — NOTE BOOK NO. — SURVEYED / PLOTTED / TEMPLATE / AREAS / AREAS CHECKED — BY — DATE

ORIGINAL SURVEY — NOTE BOOK NO. — SURVEYED / PLOTTED / TEMPLATE / AREAS / AREAS CHECKED — BY — DATE

PENTABLE = ...\LISLE\PENTABLE\TRANSPEN.TBL

PATRICK ENGINEERING INC.
4970 VARSITY DRIVE
LISLE, IL 60532
patrickengineering.com

USER NAME = mvasak(Rdwy_Lisle)	DESIGNED - MJV	REVISED - 10/7/2014	
	DRAWN - MJV	REVISED -	
PLOT SCALE = 5.0000 ' / IN.	CHECKED - MJP	REVISED -	
PLOT DATE = 10/7/2014	DATE - 6/30/2014	REVISED -	

STATE OF ILLINOIS
DEPARTMENT OF TRANSPORTATION

WASHINGTON STREET FROM HARYAN WAY TO LAKE STREET
WASHINGTON STREET CROSS SECTIONS

SCALE: | SHEET NO. OF SHEETS | STA. 116+68.57 TO STA. 116+68.57

F.A.U RTE.	SECTION	COUNTY	TOTAL SHEETS	SHEET NO.
187	11-00121-11-BR	LAKE	496	386

CONTRACT NO. 61A63

ILLINOIS FED. AID PROJECT

Q:\LCDOT\21150.004\Drawings\shts\Xsec\S_XS_Wash_21150.004.dgn

117+00.00		STAGE 1	STAGE 2	STAGE 3
	UNSUITABLE	0.00	390.20	67.28
	EXCAVATION	0.00	1624.06	60.27
	EMBANKMENT	0.00	0.00	17.85

ALL UNITS ARE SQ FT

LEGEND
- TEMPORARY PAVEMENT BY OTHERS
- STRUCTURAL EXCAVATION
- BRACED EXCAVATION

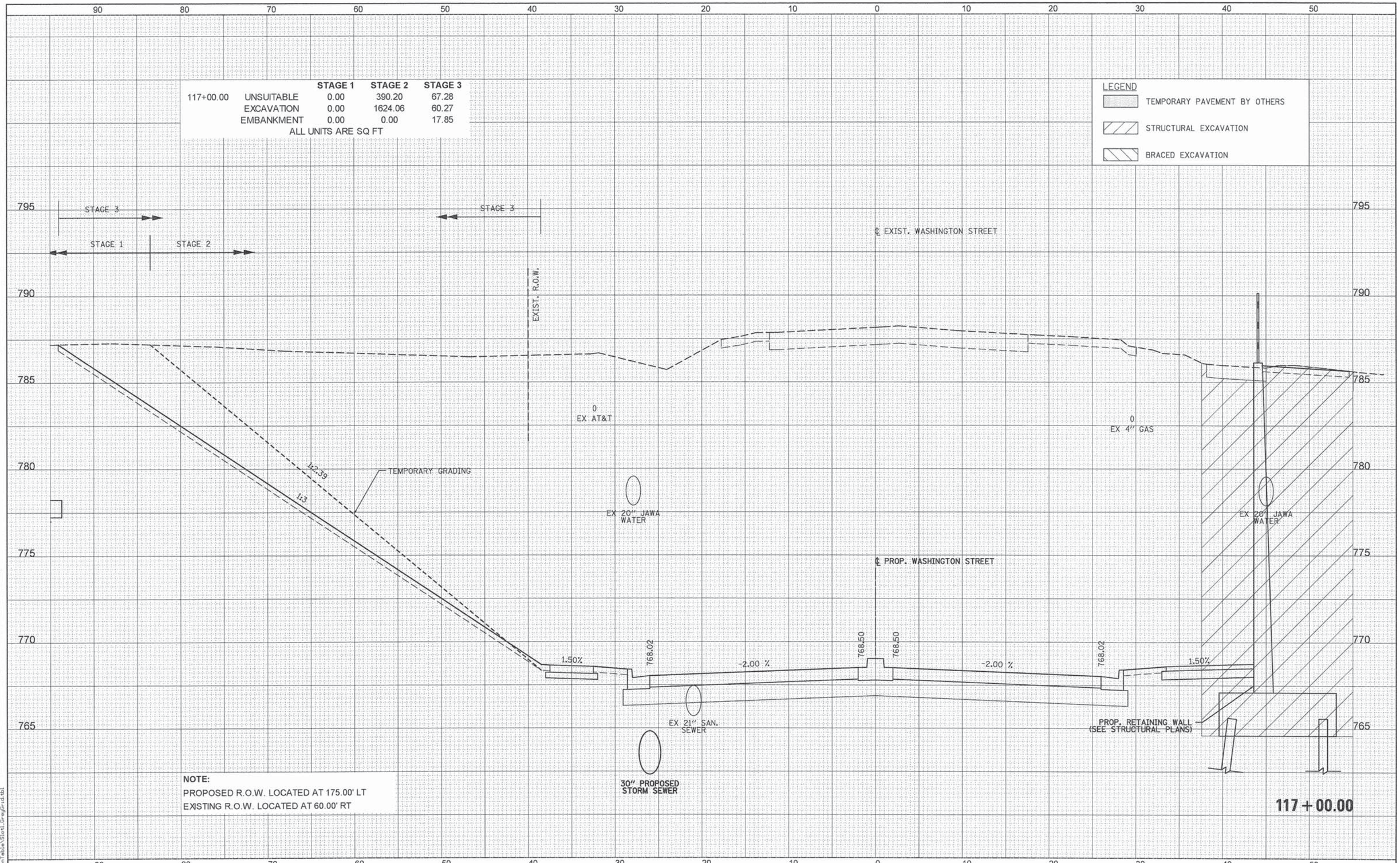

NOTE:
PROPOSED R.O.W. LOCATED AT 175.00' LT
EXISTING R.O.W. LOCATED AT 60.00' RT

117 + 00.00

FINAL SURVEY	BY	DATE
SURVEYED		
PLOTTED		
TEMPLATE		
AREAS		
AREAS CHECKED		
NOTE BOOK		
NO.		

ORIGINAL SURVEY	BY	DATE
SURVEYED		
PLOTTED		
TEMPLATE		
AREAS		
AREAS CHECKED		
NOTE BOOK		
NO.		

PATRICK ENGINEERING INC.
4970 VARSITY DRIVE
LISLE, IL 60532
patrickengineering.com

USER NAME = tkoeppen(Rdwy_Lisle)	DESIGNED - MJV	REVISED -	
	DRAWN - MJV	REVISED -	
PLOT SCALE = 10.0000 ' / in.	CHECKED - MJP	REVISED -	
PLOT DATE = 7/3/2014	DATE - 6/30/2014	REVISED -	

STATE OF ILLINOIS
DEPARTMENT OF TRANSPORTATION

WASHINGTON STREET FROM HARYAN WAY TO LAKE STREET
WASHINGTON STREET CROSS SECTIONS

SCALE: | SHEET NO. OF SHEETS | STA. 117+00.00 TO STA. 117+00.00

F.A. RTE.	SECTION	COUNTY	TOTAL SHEETS	SHEET NO.
187	11-00121-11-BR	LAKE	496	387
		CONTRACT NO. 61A63		
		ILLINOIS FED. AID PROJECT		

PENTABLE = ...\PenTables\Slot1.GrayGrid.tbl

Q:\LCDOT\21150.004\Drawings\shts\Xsec\S_XS_Wash_21150.004.dgn

		STAGE 1	STAGE 2	STAGE 3
117+50.00	UNSUITABLE	0.00	515.46	69.80
	EXCAVATION	0.00	1510.63	42.81
	EMBANKMENT	0.00	8.14	28.86

ALL UNITS ARE SQ FT

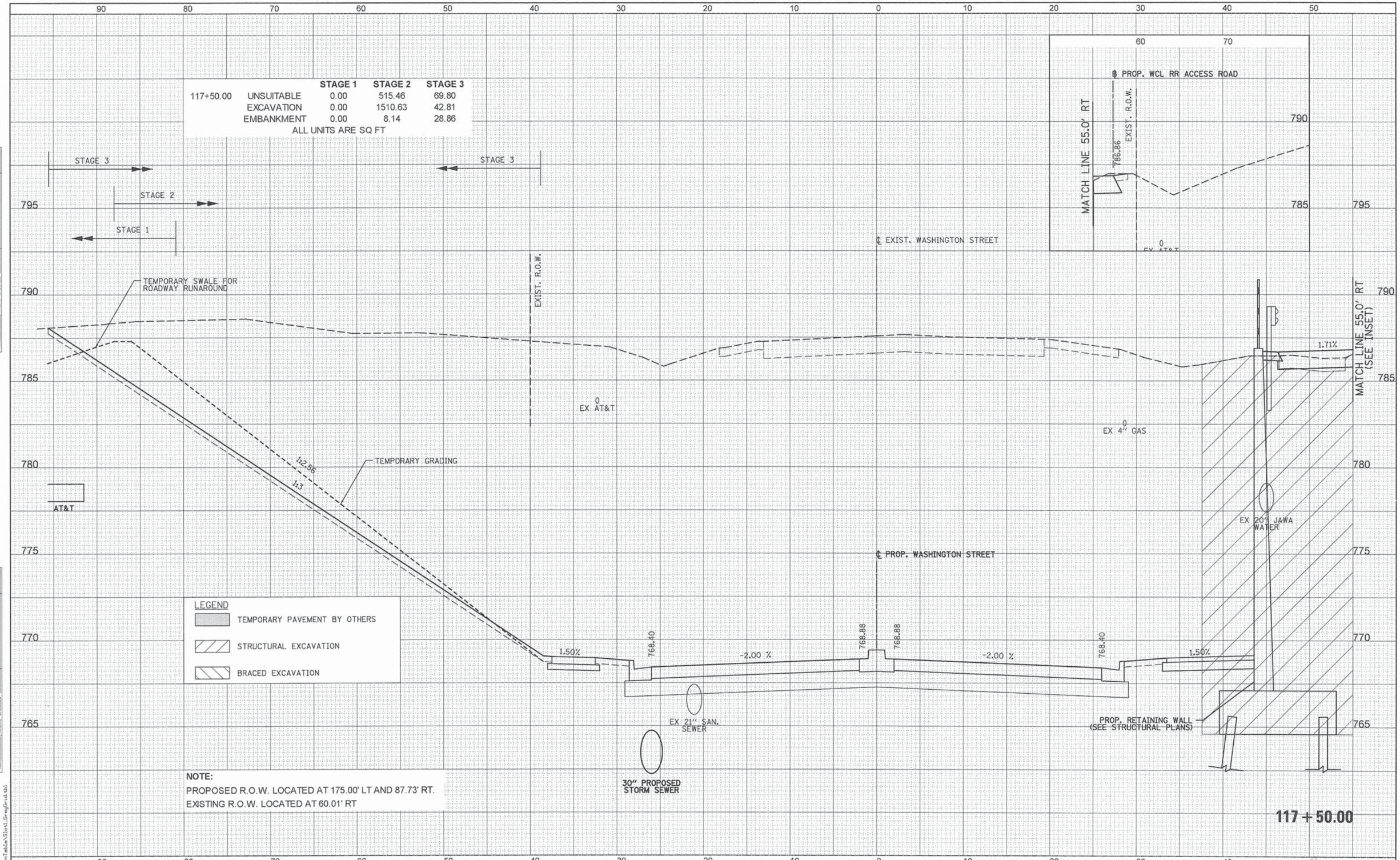

NOTE:
PROPOSED R.O.W. LOCATED AT 175.00' LT AND 87.73' RT.
EXISTING R.O.W. LOCATED AT 60.01' RT

FINAL SURVEY		BY	DATE
NOTE BOOK	SURVEYED		
	PLOTTED		
	TEMPLATE		
	AREAS		
NO.	AREAS CHECKED		

ORIGINAL SURVEY		BY	DATE
NOTE BOOK	SURVEYED		
	PLOTTED		
	TEMPLATE		
	AREAS		
NO.	AREAS CHECKED		

PATRICK ENGINEERING INC.
4970 VARSITY DRIVE
LISLE, IL 60532
patrickengineering.com
PATRICK ENGINEERING

USER NAME = tkoeppen(Rdwy_Lisle)	DESIGNED - MJV	REVISED -	
	DRAWN - MJV	REVISED -	
PLOT SCALE = 10.0000 ' / in.	CHECKED - MJP	REVISED -	
PLOT DATE = 7/3/2014	DATE - 6/30/2014	REVISED -	

STATE OF ILLINOIS
DEPARTMENT OF TRANSPORTATION

WASHINGTON STREET FROM HARYAN WAY TO LAKE STREET
WASHINGTON STREET CROSS SECTIONS

SCALE: | SHEET NO. OF SHEETS | STA. 117+50.00 TO STA. 117+50.00

F.A.U RTE.	SECTION	COUNTY	TOTAL SHEETS	SHEET NO.
187	11-00121-11-BR	LAKE	496	388
		CONTRACT NO. 61A63		
		ILLINOIS FED. AID PROJECT		

PENTABLE = ...\PenTable\Slot_GreyGrid.tbl

Q:\LCDOT\21150_004\Drawings\shts\Xsec\S_XS_Wash_21150_004.dgn

118+00.00		STAGE 1	STAGE 2	STAGE 3
	UNSUITABLE	0.00	534.31	47.37
	EXCAVATION	0.00	1363.10	5.51
	EMBANKMENT	0.00	24.05	21.97

ALL UNITS ARE SQ FT

LEGEND
- TEMPORARY PAVEMENT BY OTHERS
- STRUCTURAL EXCAVATION
- BRACED EXCAVATION

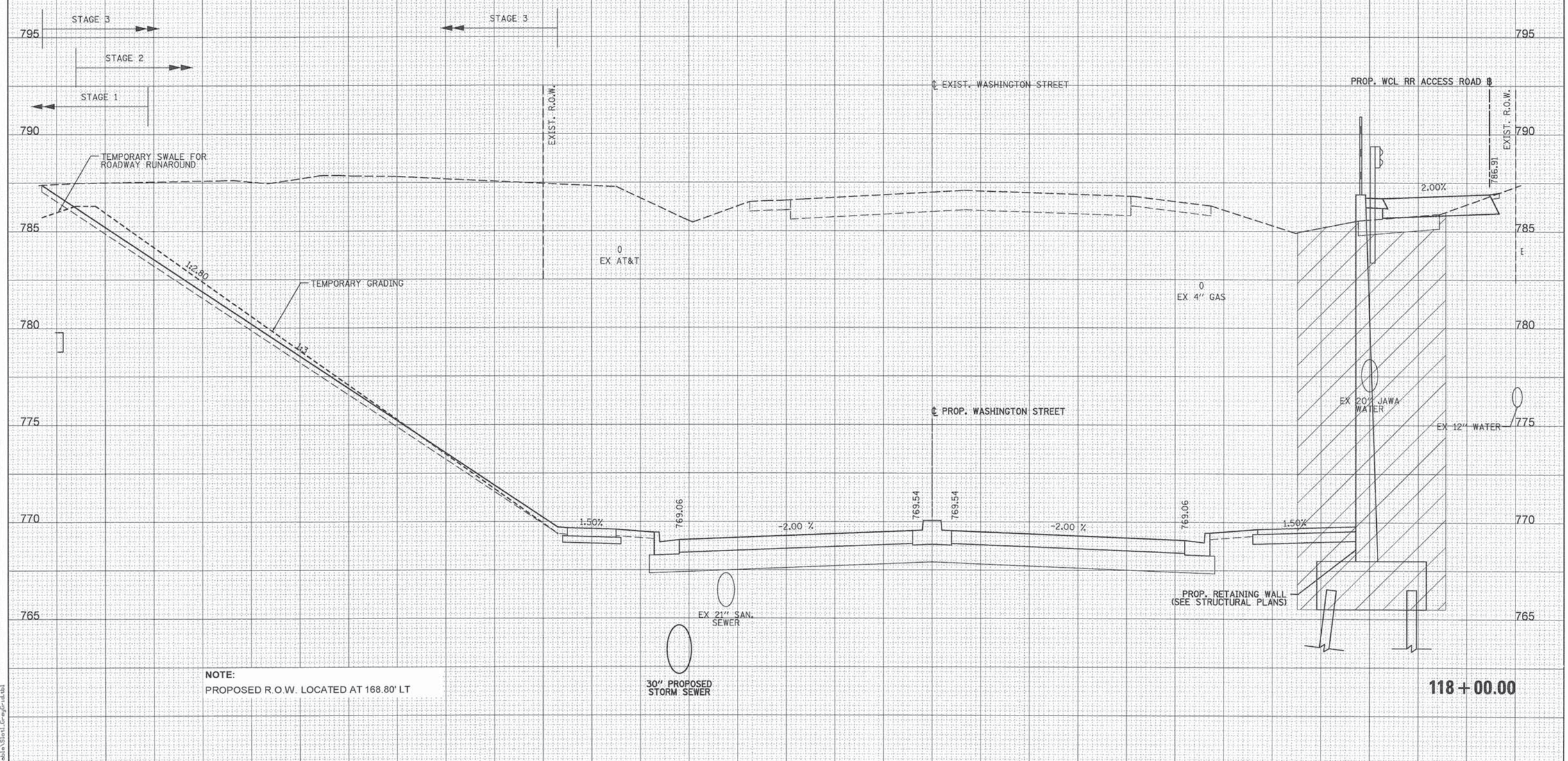

NOTE:
PROPOSED R.O.W. LOCATED AT 168.80' LT

118 + 00.00

FINAL SURVEY	BY	DATE
NOTE BOOK NO.	SURVEYED	
	PLOTTED	
	TEMPLATE	
	AREAS	
	AREAS CHECKED	

ORIGINAL SURVEY	BY	DATE
NOTE BOOK NO.	SURVEYED	
	PLOTTED	
	TEMPLATE	
	AREAS	
	AREAS CHECKED	

PENTABLE = ...\PenTables\Slot_GreyGrid.tbl

PATRICK ENGINEERING
PATRICK ENGINEERING INC.
4970 VARSITY DRIVE
LISLE, IL 60532
patrickengineering.com

USER NAME = tkoeppen(Rdwy_Lisle)	DESIGNED - MJV	REVISED -	
	DRAWN - MJV	REVISED -	
PLOT SCALE = 10.0000 ' / in.	CHECKED - MJP	REVISED -	
PLOT DATE = 7/3/2014	DATE - 6/30/2014	REVISED -	

STATE OF ILLINOIS
DEPARTMENT OF TRANSPORTATION

WASHINGTON STREET FROM HARYAN WAY TO LAKE STREET
WASHINGTON STREET CROSS SECTIONS

SCALE: | SHEET NO. OF SHEETS | STA. 118+00.00 TO STA. 118+00.00

F.A.U RTE.	SECTION	COUNTY	TOTAL SHEETS	SHEET NO.
187	11-00121-11-BR	LAKE	496	389

CONTRACT NO. 61A63
ILLINOIS FED. AID PROJECT

Q:\LCOOT\21150_004\Drawings\shts\Xsec\S_XS_Wash_21150_004.dgn

		STAGE 1	STAGE 2	STAGE 3
118+40.03	UNSUITABLE	0.00	395.95	0.00
	EXCAVATION	0.00	1228.06	0.00
	EMBANKMENT	0.00	20.00	0.00

ALL UNITS ARE SQ FT

LEGEND
- TEMPORARY PAVEMENT BY OTHERS
- STRUCTURAL EXCAVATION
- BRACED EXCAVATION

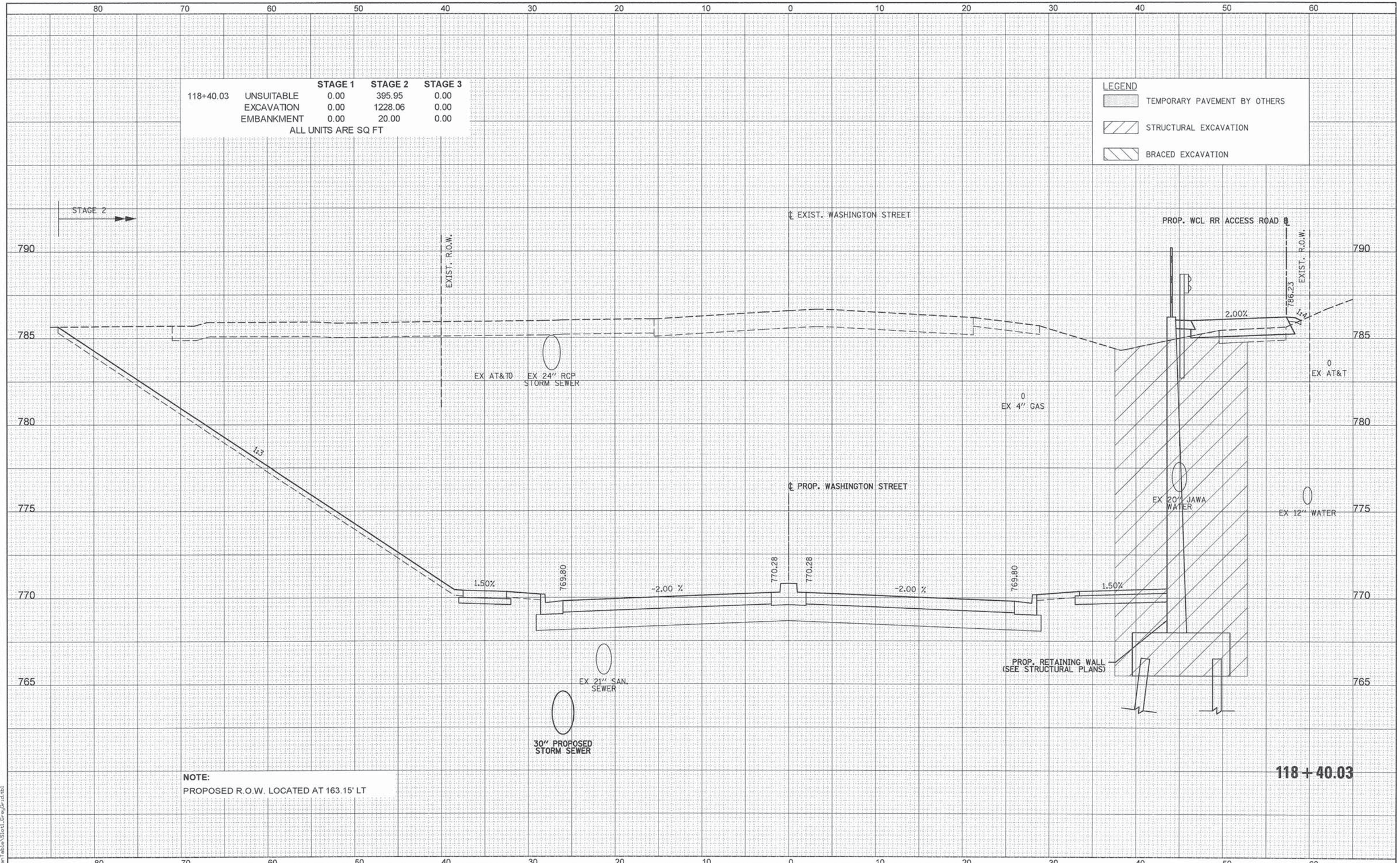

NOTE:
PROPOSED R.O.W. LOCATED AT 163.15' LT

FINAL SURVEY	BY	DATE
SURVEYED		
PLOTTED		
TEMPLATE		
AREAS		
AREAS CHECKED		
NOTE BOOK NO.		

ORIGINAL SURVEY	BY	DATE
SURVEYED		
PLOTTED		
TEMPLATE		
AREAS		
AREAS CHECKED		
NOTE BOOK NO.		

PENTABLE = ...\PenTable\Sheet.GregGrid.tbl

PATRICK ENGINEERING INC.
4970 VARSITY DRIVE
LISLE, IL 60532
patrickengineering.com

USER NAME = tkoeppen(Rdwy_Lisle)	DESIGNED - MJV	REVISED -	
	DRAWN - MJV	REVISED -	
PLOT SCALE = 10.0000 ' / in.	CHECKED - MJP	REVISED -	
PLOT DATE = 7/3/2014	DATE - 6/30/2014	REVISED -	

STATE OF ILLINOIS
DEPARTMENT OF TRANSPORTATION

WASHINGTON STREET FROM HARYAN WAY TO LAKE STREET
WASHINGTON STREET CROSS SECTIONS

SCALE: | SHEET NO. OF SHEETS | STA. 118+40.03 TO STA. 118+40.03

F.A.U RTE.	SECTION	COUNTY	TOTAL SHEETS	SHEET NO.
187	11-00121-11-BR	LAKE	496	390

CONTRACT NO. 61A63

ILLINOIS FED. AID PROJECT

Q:\LCDOT\21150_004\Drawings\shts\Xsec\S_XS_Wash_21150_004.dgn

		STAGE 1	STAGE 2	STAGE 3
119+00.00	UNSUITABLE	0.00	356.36	0.00
	EXCAVATION	0.00	912.32	0.00
	EMBANKMENT	0.00	6.38	0.00

ALL UNITS ARE SQ FT

LEGEND

- TEMPORARY PAVEMENT BY OTHERS
- STRUCTURAL EXCAVATION
- BRACED EXCAVATION

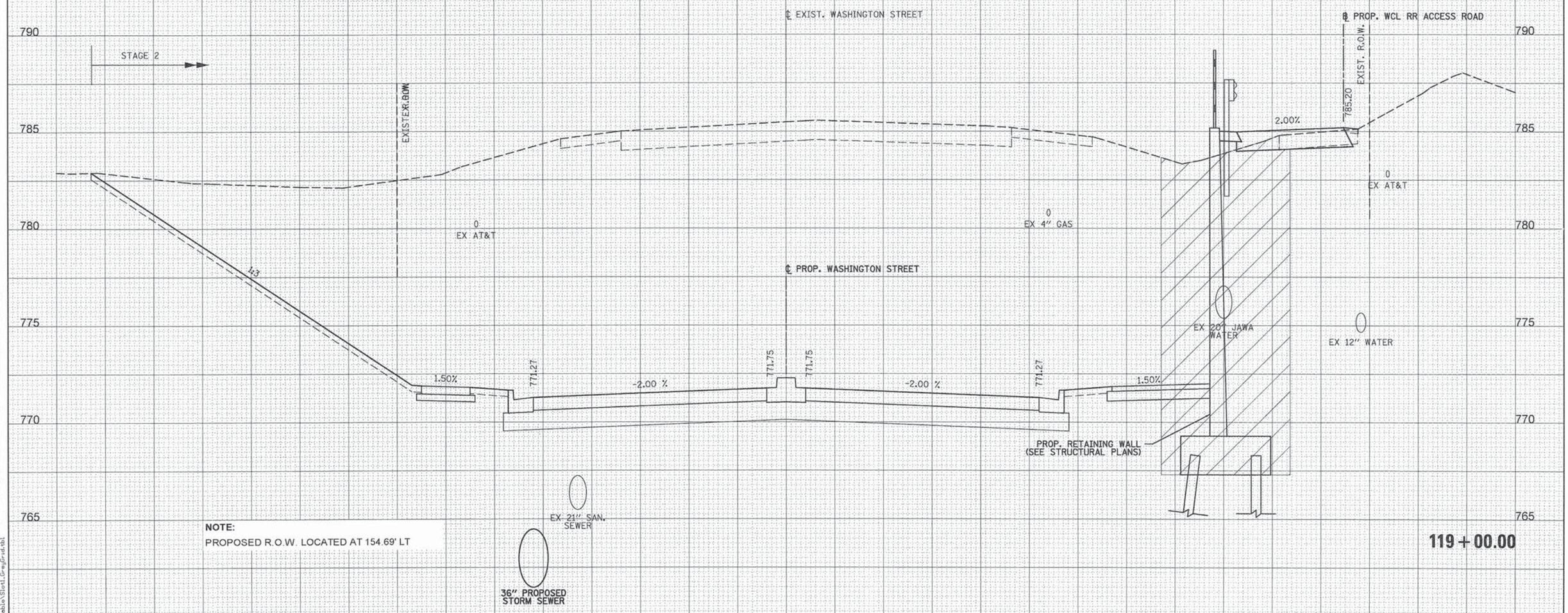

NOTE:
PROPOSED R.O.W. LOCATED AT 154.69' LT

FINAL SURVEY	BY	DATE
SURVEYED		
PLOTTED		
TEMPLATE		
AREAS		
AREAS CHECKED		
NOTE BOOK		
NO.		

ORIGINAL SURVEY	BY	DATE
SURVEYED		
PLOTTED		
TEMPLATE		
AREAS		
AREAS CHECKED		
NOTE BOOK		
NO.		

PENTABLE = ...\Pentable\Slot1_Grey_Grid.tbl

PATRICK ENGINEERING INC.
4970 VARSITY DRIVE
LISLE, IL 60532
patrickengineering.com
PATRICK ENGINEERING

USER NAME = tkoepper(Rdwy_Lisle)	DESIGNED - MJV	REVISED -	
	DRAWN - MJV	REVISED -	
PLOT SCALE = 10.0000 ' / in.	CHECKED - MJP	REVISED -	
PLOT DATE = 7/3/2014	DATE - 6/30/2014	REVISED -	

STATE OF ILLINOIS
DEPARTMENT OF TRANSPORTATION

WASHINGTON STREET FROM HARYAN WAY TO LAKE STREET
WASHINGTON STREET CROSS SECTIONS

SCALE: | SHEET NO. OF SHEETS | STA. 119+00.00 TO STA. 119+00.00

F.A.U RTE.	SECTION	COUNTY	TOTAL SHEETS	SHEET NO.
187	11-00121-11-BR	LAKE	496	391

CONTRACT NO. 61A63

ILLINOIS FED. AID PROJECT

G:\LCDOT\21150_004\Drawings\shts\Xsec\S_XS_Wash_21150_004.dgn

		STAGE 1	STAGE 2	STAGE 3
119+50.00	UNSUITABLE	0.00	359.20	0.00
	EXCAVATION	0.00	630.02	0.00
	EMBANKMENT	0.00	1.44	0.00

ALL UNITS ARE SQ FT

LEGEND

- TEMPORARY PAVEMENT BY OTHERS
- STRUCTURAL EXCAVATION
- BRACED EXCAVATION

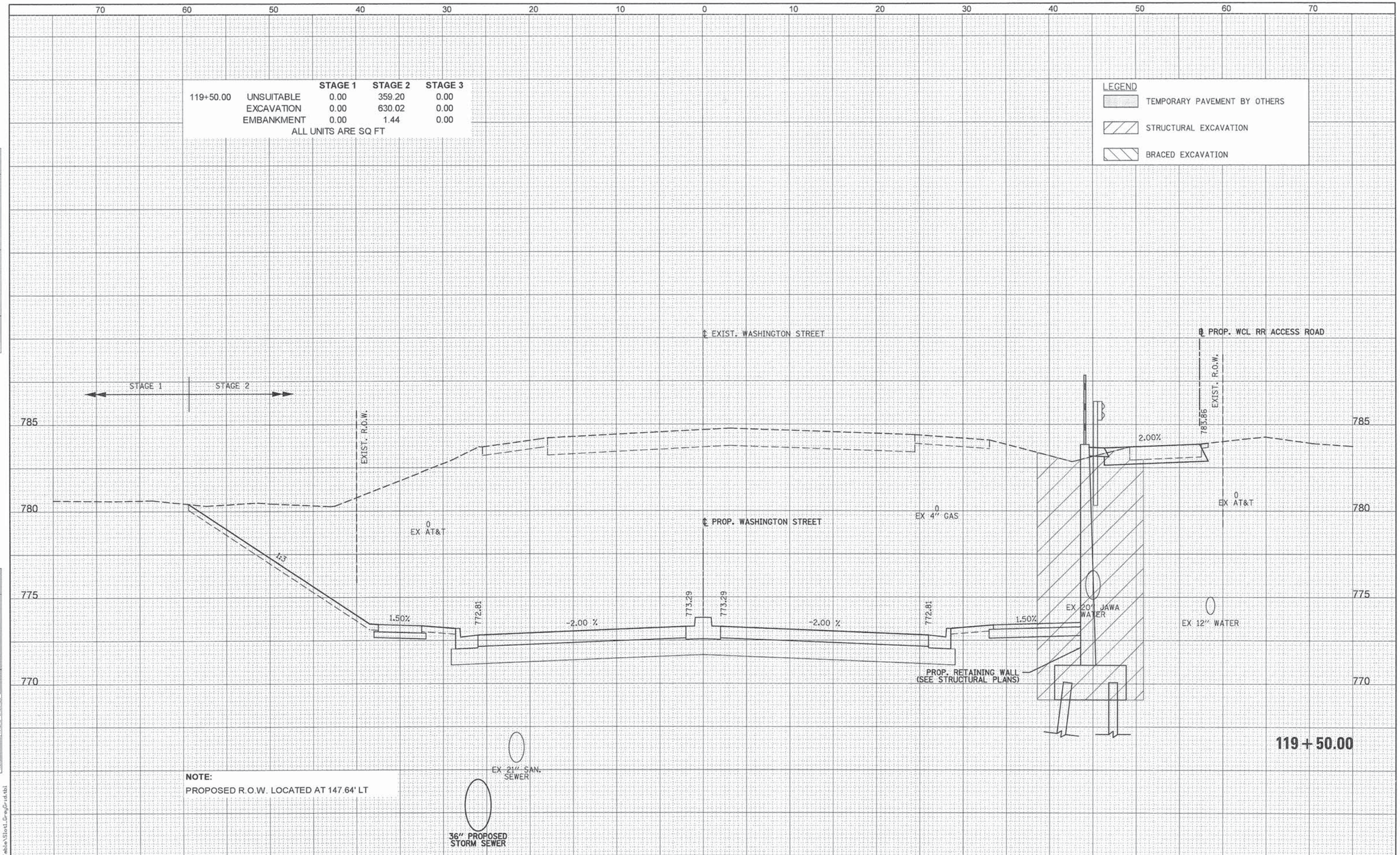

NOTE:
PROPOSED R.O.W. LOCATED AT 147.64' LT

FINAL SURVEY		BY	DATE
NOTE BOOK	SURVEYED		
	PLOTTED		
	TEMPLATE		
	AREAS		
NO.	AREAS CHECKED		

ORIGINAL SURVEY		BY	DATE
NOTE BOOK	SURVEYED		
	PLOTTED		
	TEMPLATE		
	AREAS		
NO.	AREAS CHECKED		

PATRICK ENGINEERING
PATRICK ENGINEERING INC.
4970 VARSITY DRIVE
LISLE, IL 60532
patrickengineering.com

USER NAME = tkoeppen(Rdwy_Lisle)	DESIGNED - MJV	REVISED -	
	DRAWN - MJV	REVISED -	
PLOT SCALE = 10.0000 ' / in.	CHECKED - MJP	REVISED -	
PLOT DATE = 7/3/2014	DATE - 6/30/2014	REVISED -	

STATE OF ILLINOIS
DEPARTMENT OF TRANSPORTATION

WASHINGTON STREET FROM HARYAN WAY TO LAKE STREET
WASHINGTON STREET CROSS SECTIONS

SCALE: | SHEET NO. OF SHEETS | STA. 119+50.00 TO STA. 119+50.00

F.A.U RTE.	SECTION	COUNTY	TOTAL SHEETS	SHEET NO.
187	11-00121-11-BR	LAKE	496	392
		CONTRACT NO. 61A63		
		ILLINOIS FED. AID PROJECT		

PENTABLE = ...\PenTable\Slosl_GrayGrid.tbl

G:\LCDOT\21150.004\Drawings\shts\Xsec\S_XS_Wash_21150.004.dgn

		STAGE 1	STAGE 2	STAGE 3
120+00.00	UNSUITABLE	0.00	369.43	0.00
	EXCAVATION	0.00	406.73	0.00
	EMBANKMENT	0.00	5.26	0.00

ALL UNITS ARE SQ FT

LEGEND

- TEMPORARY PAVEMENT BY OTHERS
- STRUCTURAL EXCAVATION
- BRACED EXCAVATION

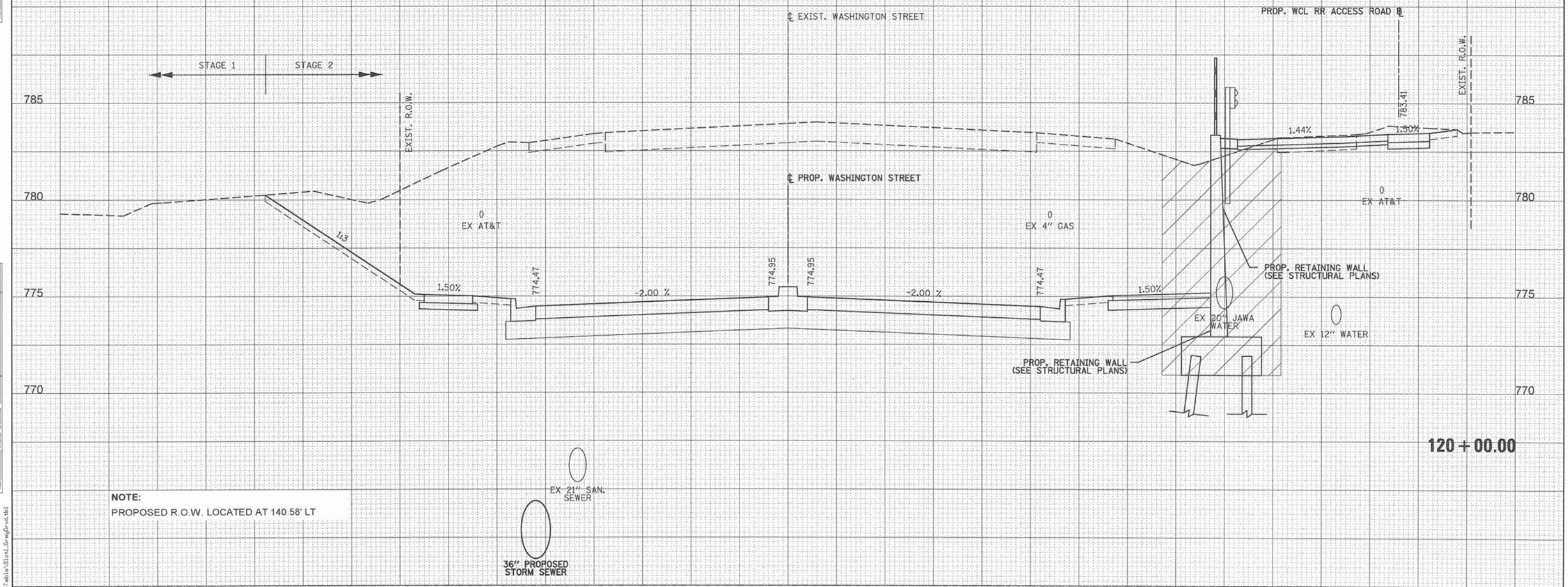

NOTE:
PROPOSED R.O.W. LOCATED AT 140.58' LT

FINAL SURVEY		BY	DATE
NOTE BOOK	SURVEYED		
	PLOTTED		
	TEMPLATE		
	AREAS		
NO.	AREAS CHECKED		

ORIGINAL SURVEY		BY	DATE
NOTE BOOK	SURVEYED		
	PLOTTED		
	TEMPLATE		
	AREAS		
NO.	AREAS CHECKED		

PATRICK ENGINEERING INC.
4970 VARSITY DRIVE
LISLE, IL 60532
patrickengineering.com
PATRICK ENGINEERING

USER NAME = tkoeppen(Rdwy_Lisle)	DESIGNED - MJV	REVISED -	
	DRAWN - MJV	REVISED -	
PLOT SCALE = 10.0000 ' / in.	CHECKED - MJP	REVISED -	
PLOT DATE = 7/3/2014	DATE - 6/30/2014	REVISED -	

STATE OF ILLINOIS
DEPARTMENT OF TRANSPORTATION

WASHINGTON STREET FROM HARYAN WAY TO LAKE STREET
WASHINGTON STREET CROSS SECTIONS

SCALE: | SHEET NO. OF SHEETS | STA. 120+00.00 TO STA. 120+00.00

F.A.U RTE.	SECTION	COUNTY	TOTAL SHEETS	SHEET NO.
187	11-00121-11-BR	LAKE	496	393

CONTRACT NO. 61A63

ILLINOIS FED. AID PROJECT

PENTABLE = ...\PenTable\Slosl_GrayGrid.tbl

G:\LCDOT\21150_004\Drawings\shts\Xsec\S_XS_Wash_21150_004.dgn

		STAGE 1	STAGE 2	STAGE 3
120+50.00	UNSUITABLE	0.00	402.46	0.00
	EXCAVATION	0.00	192.30	0.00
	EMBANKMENT	0.00	7.84	0.00

ALL UNITS ARE SQ FT

LEGEND

- TEMPORARY PAVEMENT BY OTHERS
- STRUCTURAL EXCAVATION
- BRACED EXCAVATION

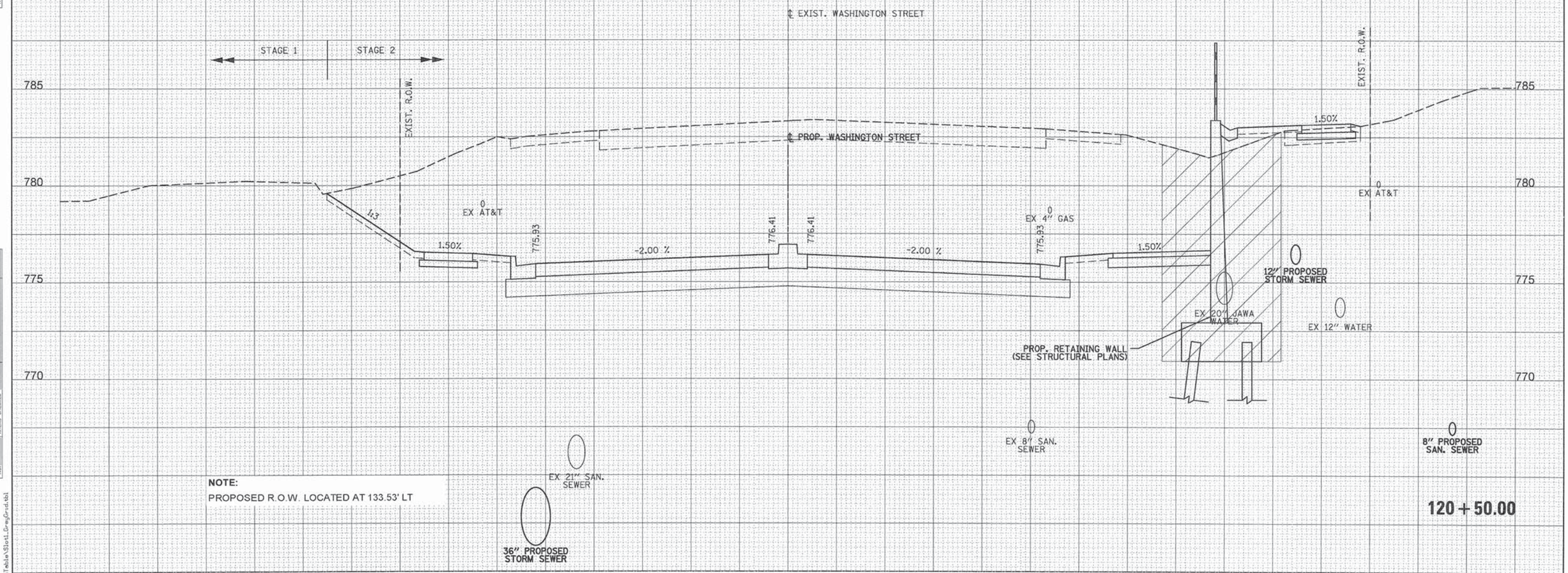

NOTE:

PROPOSED R.O.W. LOCATED AT 133.53' LT

FINAL SURVEY	BY	DATE
SURVEYED		
PLOTTED		
TEMPLATE		
AREAS		
AREAS CHECKED		
NOTE BOOK		
NO.		

ORIGINAL SURVEY	BY	DATE
SURVEYED		
PLOTTED		
TEMPLATE		
AREAS		
AREAS CHECKED		
NOTE BOOK		
NO.		

PENTABLE = ...\PenTable\Slat_GreyGrid.tbl

PATRICK ENGINEERING INC.
4970 VARSITY DRIVE
LISLE, IL 60532
patrickengineering.com
PATRICK ENGINEERING

USER NAME = tkoeppen(Rdwy_Lisle)	DESIGNED - MJV	REVISED -	
	DRAWN - MJV	REVISED -	
PLOT SCALE = 10.0000 ' / in.	CHECKED - MJP	REVISED -	
PLOT DATE = 7/3/2014	DATE - 6/30/2014	REVISED -	

STATE OF ILLINOIS
DEPARTMENT OF TRANSPORTATION

WASHINGTON STREET FROM HARYAN WAY TO LAKE STREET
WASHINGTON STREET CROSS SECTIONS

SCALE: | SHEET NO. OF SHEETS | STA. 120+50.00 TO STA. 120+50.00

F.A.U RTE.	SECTION	COUNTY	TOTAL SHEETS	SHEET NO.
187	11-00121-11-BR	LAKE	496	394

CONTRACT NO. 61A63

ILLINOIS FED. AID PROJECT

G:\LCDOT\21150_004\Drawings\shts\Xsec\S_XS_Wash_21150_004.dgn

		STAGE 1	STAGE 2	STAGE 3
121+00.00	UNSUITABLE	21.48	452.35	8.29
	EXCAVATION	0.00	27.96	22.12
	EMBANKMENT	71.57	40.75	0.63

ALL UNITS ARE SQ FT

LEGEND

- TEMPORARY PAVEMENT BY OTHERS
- STRUCTURAL EXCAVATION
- BRACED EXCAVATION

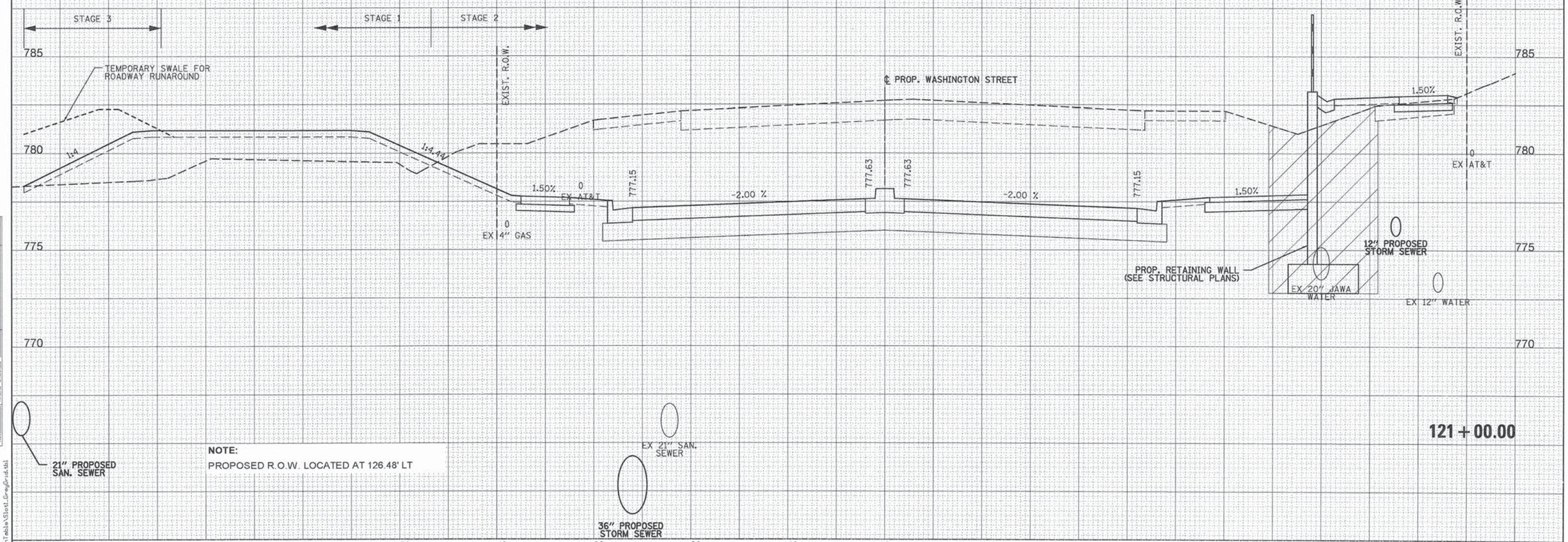

NOTE:

PROPOSED R.O.W. LOCATED AT 126.48' LT

PATRICK ENGINEERING INC. 4970 VARSITY DRIVE LISLE, IL 60532 patrickengineering.com	USER NAME = tkoeppen(Rdwy_Lisle)	DESIGNED - MJV	REVISED -
		DRAWN - MJV	REVISED -
	PLOT SCALE = 10.0000 ' / in.	CHECKED - MJP	REVISED -
	PLOT DATE = 7/3/2014	DATE - 6/30/2014	REVISED -

STATE OF ILLINOIS
DEPARTMENT OF TRANSPORTATION

WASHINGTON STREET FROM HARYAN WAY TO LAKE STREET
WASHINGTON STREET CROSS SECTIONS

SCALE: | SHEET NO. OF SHEETS | STA. 121+00.00 TO STA. 121+00.00

F.A.U RTE.	SECTION	COUNTY	TOTAL SHEETS	SHEET NO.
187	11-00121-11-BR	LAKE	496	395

CONTRACT NO. 61A63

ILLINOIS FED. AID PROJECT

PENTABLE = ...\PenTable\Slot1_Gray_Grid.tbl

G:\LCDOT\21150_004\Drawings\shts\Xsec\S_XS_Wash_21150_004.dgn

		STAGE 1	STAGE 2	STAGE 3
121+10.15	UNSUITABLE	27.75	443.61	9.14
	EXCAVATION	0.00	10.39	14.90
	EMBANKMENT	179.30	44.10	0.50

ALL UNITS ARE SQ FT

LEGEND

- TEMPORARY PAVEMENT BY OTHERS
- STRUCTURAL EXCAVATION
- BRACED EXCAVATION

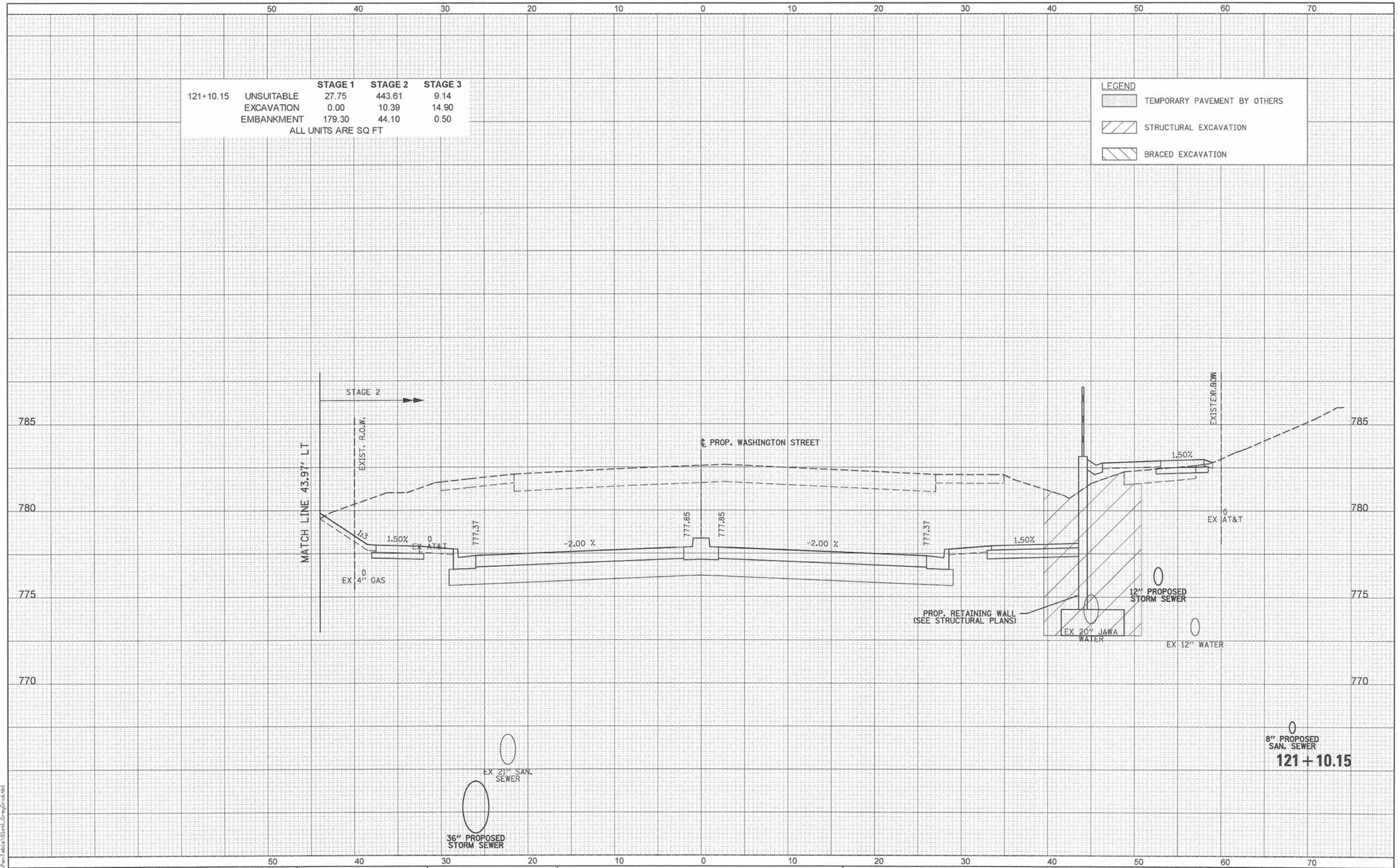

PATRICK ENGINEERING INC. 4970 VARSITY DRIVE LISLE, IL 60532 patrickengineering.com	USER NAME = tkoeppen(Rdwy_Lisle)	DESIGNED - MJV	REVISED -
		DRAWN - MJV	REVISED -
	PLOT SCALE = 10.0000 ' / in.	CHECKED - MJP	REVISED -
	PLOT DATE = 7/3/2014	DATE - 6/30/2014	REVISED -

STATE OF ILLINOIS
DEPARTMENT OF TRANSPORTATION

WASHINGTON STREET FROM HARYAN WAY TO LAKE STREET
WASHINGTON STREET CROSS SECTIONS

SCALE: | SHEET NO. OF SHEETS | STA. 121+10.15 TO STA. 121+10.15

F.A.U RTE.	SECTION	COUNTY	TOTAL SHEETS	SHEET NO.
187	11-00121-11-BR	LAKE	496	396

CONTRACT NO. 61A63

ILLINOIS FED. AID PROJECT

FINAL SURVEY: NOTE BOOK NO. ___ SURVEYED ___ PLOTTED ___ TEMPLATE ___ AREAS ___ AREAS CHECKED ___ BY ___ DATE ___

ORIGINAL SURVEY: NOTE BOOK NO. ___ SURVEYED ___ PLOTTED ___ TEMPLATE ___ AREAS ___ AREAS CHECKED ___ BY ___ DATE ___

PENTABLE = ...\Pentable\Slot1_GrayGrid.tbl

Q:\LCDOT\21150_004\Drawings\shts\Xsec\S_XS_Wash_21150_004.dgn

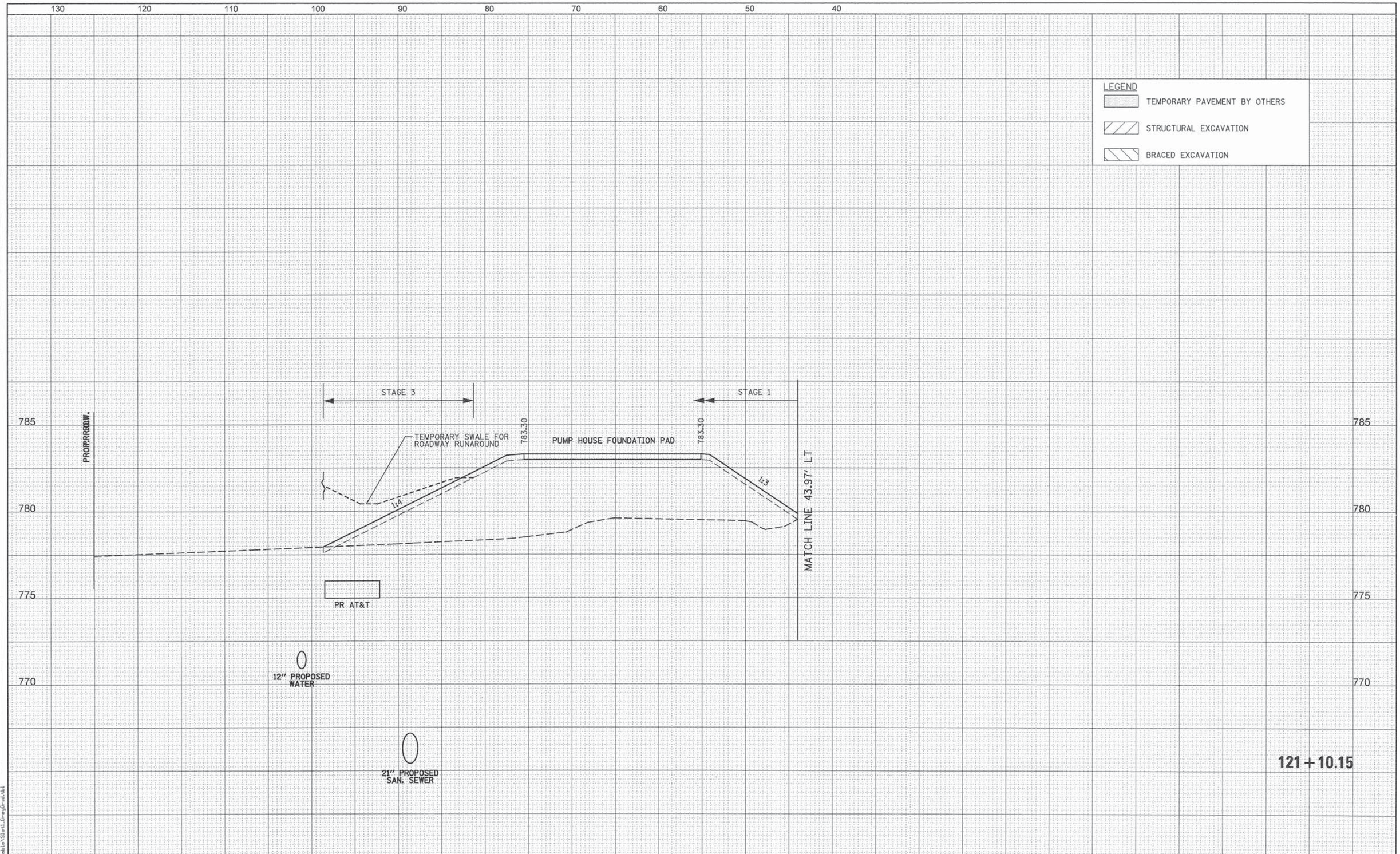

FINAL SURVEY	BY	DATE
SURVEYED		
PLOTTED		
TEMPLATE		
AREAS		
AREAS CHECKED		
NOTE BOOK NO.		

ORIGINAL SURVEY	BY	DATE
SURVEYED		
PLOTTED		
TEMPLATE		
AREAS		
AREAS CHECKED		
NOTE BOOK NO.		

PENTABLE = ...\PenTable\Slot1_GregGrid.tbl

G:\LCDOT\21150_004\Drawings\shts\Xsec\S_XS_Wash_21150_004.dgn

PATRICK ENGINEERING INC.
4970 VARSITY DRIVE
LISLE, IL 60532
patrickengineering.com

USER NAME = tkoeppen(Rdwy_Lisle)	DESIGNED - MJV	REVISED -	
	DRAWN - MJV	REVISED -	
PLOT SCALE = 10.0000 ' / in.	CHECKED - MJP	REVISED -	
PLOT DATE = 7/3/2014	DATE - 6/30/2014	REVISED -	

STATE OF ILLINOIS
DEPARTMENT OF TRANSPORTATION

WASHINGTON STREET FROM HARYAN WAY TO LAKE STREET
WASHINGTON STREET CROSS SECTIONS

SCALE: | SHEET NO. OF SHEETS | STA. 121+10.15 TO STA. 121+10.15

F.A.U RTE.	SECTION	COUNTY	TOTAL SHEETS	SHEET NO.
187	11-00121-11-BR	LAKE	496	397

CONTRACT NO. 61A63

ILLINOIS FED. AID PROJECT

		STAGE 1	STAGE 2	STAGE 3
121+43.11	UNSUITABLE	34.42	390.66	34.46
	EXCAVATION	0.00	0.00	44.81
	EMBANKMENT	100.95	66.78	93.01

ALL UNITS ARE SQ FT

LEGEND

- TEMPORARY PAVEMENT BY OTHERS
- STRUCTURAL EXCAVATION
- BRACED EXCAVATION

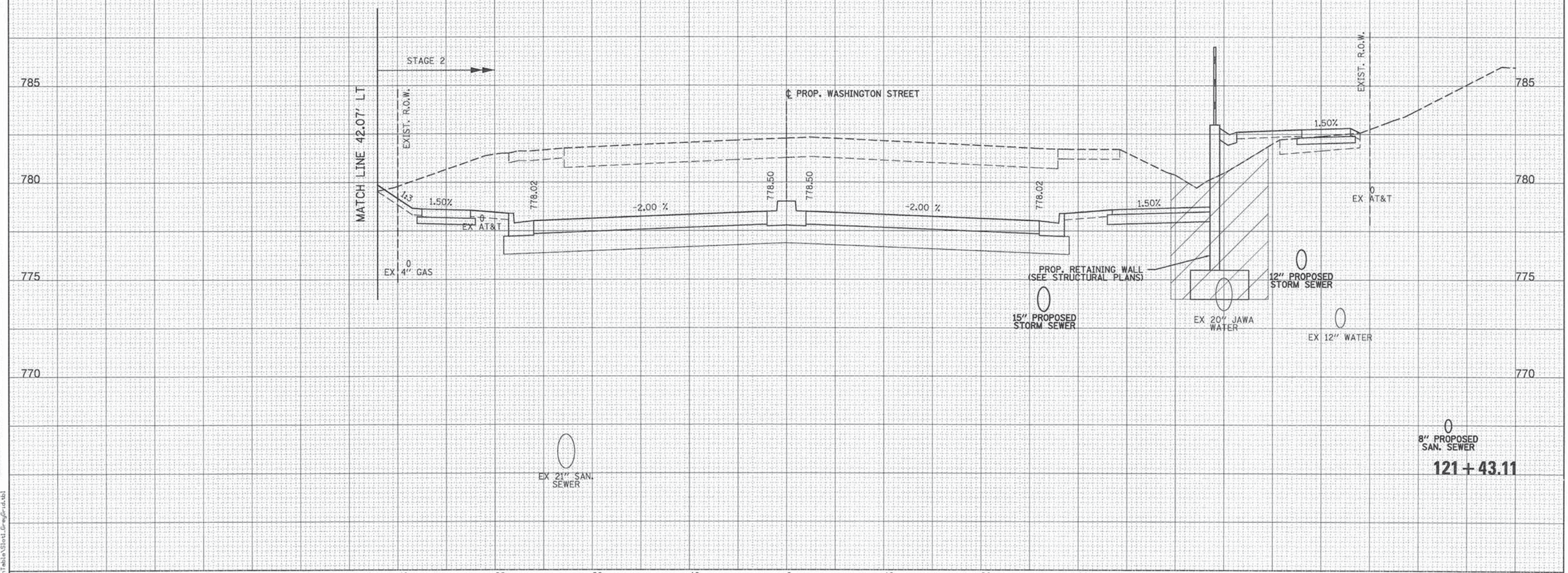

FINAL SURVEY		BY	DATE
NOTE BOOK	SURVEYED		
	PLOTTED		
	TEMPLATE		
	AREAS		
NO.	AREAS CHECKED		

ORIGINAL SURVEY		BY	DATE
NOTE BOOK	SURVEYED		
	PLOTTED		
	TEMPLATE		
	AREAS		
NO.	AREAS CHECKED		

PENTABLE = ...\PenTables\Slot1_GreyGrid.tbl

G:\LCDOT\21150_004\Drawings\shts\Xsec\S_XS_Wash_21150_004.dgn

PATRICK ENGINEERING INC.
4970 VARSITY DRIVE
LISLE, IL 60532
patrickengineering.com

USER NAME = tkoeppen(Rdwy_Lisle)	DESIGNED - MJV	REVISED -	
	DRAWN - MJV	REVISED -	
PLOT SCALE = 10.0000 ' / in.	CHECKED - MJP	REVISED -	
PLOT DATE = 7/3/2014	DATE - 6/30/2014	REVISED -	

STATE OF ILLINOIS
DEPARTMENT OF TRANSPORTATION

WASHINGTON STREET FROM HARYAN WAY TO LAKE STREET
WASHINGTON STREET CROSS SECTIONS

SCALE: | SHEET NO. OF SHEETS | STA. 121+43.11 TO STA. 121+43.11

F.A.U RTE.	SECTION	COUNTY	TOTAL SHEETS	SHEET NO.
187	11-00121-11-BR	LAKE	496	398

CONTRACT NO. 61A63

ILLINOIS FED. AID PROJECT

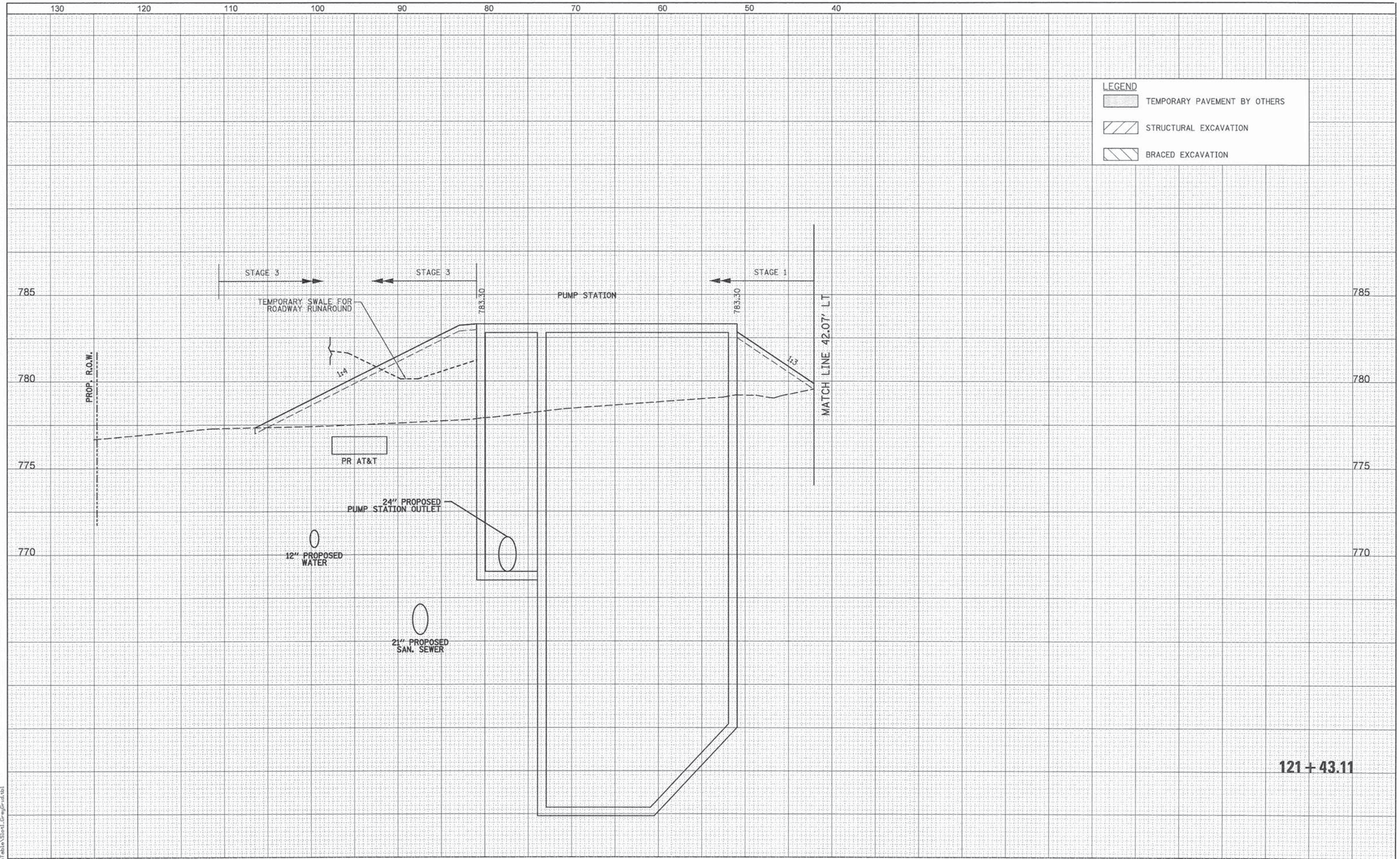

FINAL SURVEY		BY	DATE
NOTE BOOK	SURVEYED		
	PLOTTED		
	TEMPLATE		
	AREAS		
NO.	AREAS CHECKED		

ORIGINAL SURVEY		BY	DATE
NOTE BOOK	SURVEYED		
	PLOTTED		
	TEMPLATE		
	AREAS		
NO.	AREAS CHECKED		

PATRICK ENGINEERING INC.
4970 VARSITY DRIVE
LISLE, IL 60532
patrickengineering.com
PATRICK ENGINEERING

USER NAME = tkoeppen(Rdwy_Lisle)	DESIGNED - MJV	REVISED -	
	DRAWN - MJV	REVISED -	
PLOT SCALE = 10.0000 ' / in.	CHECKED - MJP	REVISED -	
PLOT DATE = 7/3/2014	DATE - 6/30/2014	REVISED -	

STATE OF ILLINOIS
DEPARTMENT OF TRANSPORTATION

WASHINGTON STREET FROM HARYAN WAY TO LAKE STREET
WASHINGTON STREET CROSS SECTIONS

SCALE: | SHEET NO. OF SHEETS | STA. 121+43.11 TO STA. 121+43.11

F.A.U RTE.	SECTION	COUNTY	TOTAL SHEETS	SHEET NO.
187	11-00121-11-BR	LAKE	496	399

CONTRACT NO. 61A63

ILLINOIS FED. AID PROJECT

PENTABLE = ...\PenTable\Slot_GreyGrid.tbl

Q:\LCDOT\21150_004\Drawings\shts\Xsec\S_XS_Wash_21150_004.dgn

		STAGE 1	STAGE 2	STAGE 3
121+50.00	UNSUITABLE	0.00	387.93	63.21
	EXCAVATION	0.00	0.00	0.00
	EMBANKMENT	0.00	80.25	178.20

ALL UNITS ARE SQ FT

LEGEND

- TEMPORARY PAVEMENT BY OTHERS
- STRUCTURAL EXCAVATION
- BRACED EXCAVATION

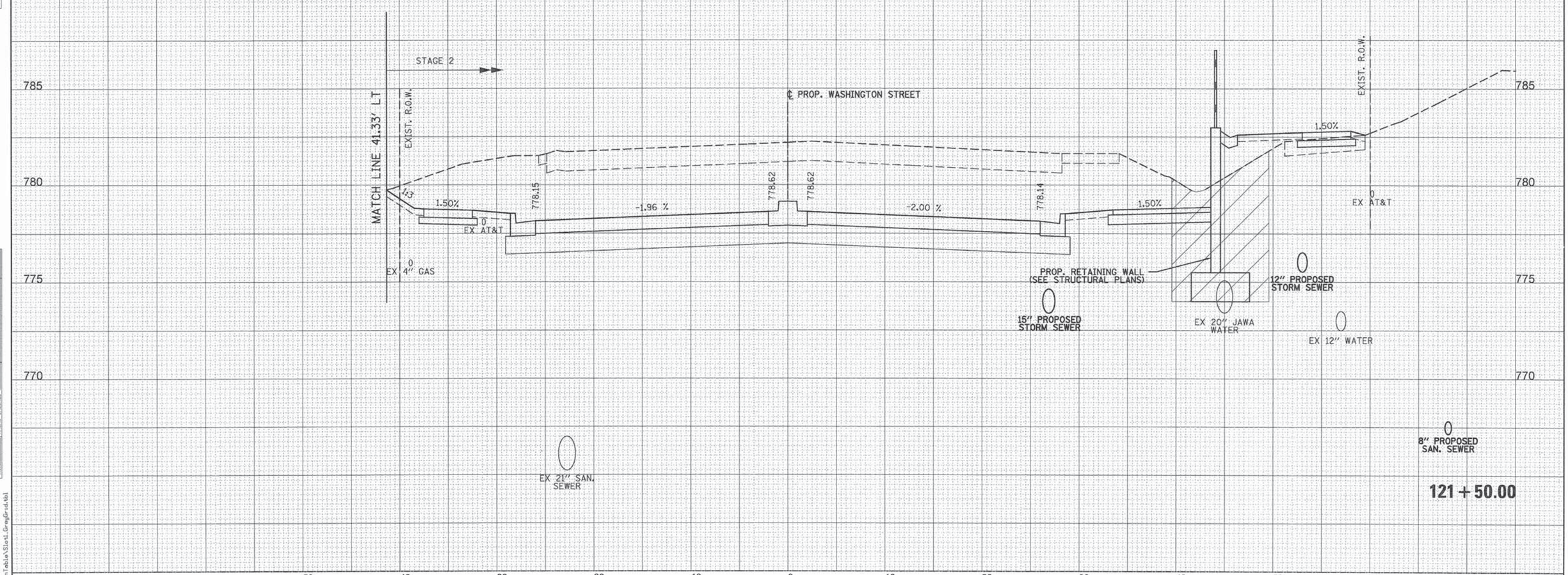

FINAL SURVEY	BY	DATE
SURVEYED		
PLOTTED		
TEMPLATE		
AREAS		
AREAS CHECKED		
NOTE BOOK		
NO.		

ORIGINAL SURVEY	BY	DATE
SURVEYED		
PLOTTED		
TEMPLATE		
AREAS		
AREAS CHECKED		
NOTE BOOK		
NO.		

PATRICK ENGINEERING INC.
4970 VARSITY DRIVE
LISLE, IL 60532
patrickengineering.com
PATRICK ENGINEERING

USER NAME = tkeepper(Rdwy_Lisle)	DESIGNED - MJV	REVISED -	
	DRAWN - MJV	REVISED -	
PLOT SCALE = 10.0000 ' / in.	CHECKED - MJP	REVISED -	
PLOT DATE = 7/3/2014	DATE - 6/30/2014	REVISED -	

STATE OF ILLINOIS
DEPARTMENT OF TRANSPORTATION

WASHINGTON STREET FROM HARYAN WAY TO LAKE STREET
WASHINGTON STREET CROSS SECTIONS

SCALE: | SHEET NO. OF SHEETS | STA. 121+50.00 TO STA. 121+50.00

F.A.U RTE.	SECTION	COUNTY	TOTAL SHEETS	SHEET NO.
187	11-00121-11-BR	LAKE	496	400

CONTRACT NO. 61A63

ILLINOIS FED. AID PROJECT

PENTABLE = ...\Pentable\Slate_Grey(Grid.tb)

G:\LCDOT\21150_004\Drawings\shts\Xsec\S_XS_Wash_21150_004.dgn