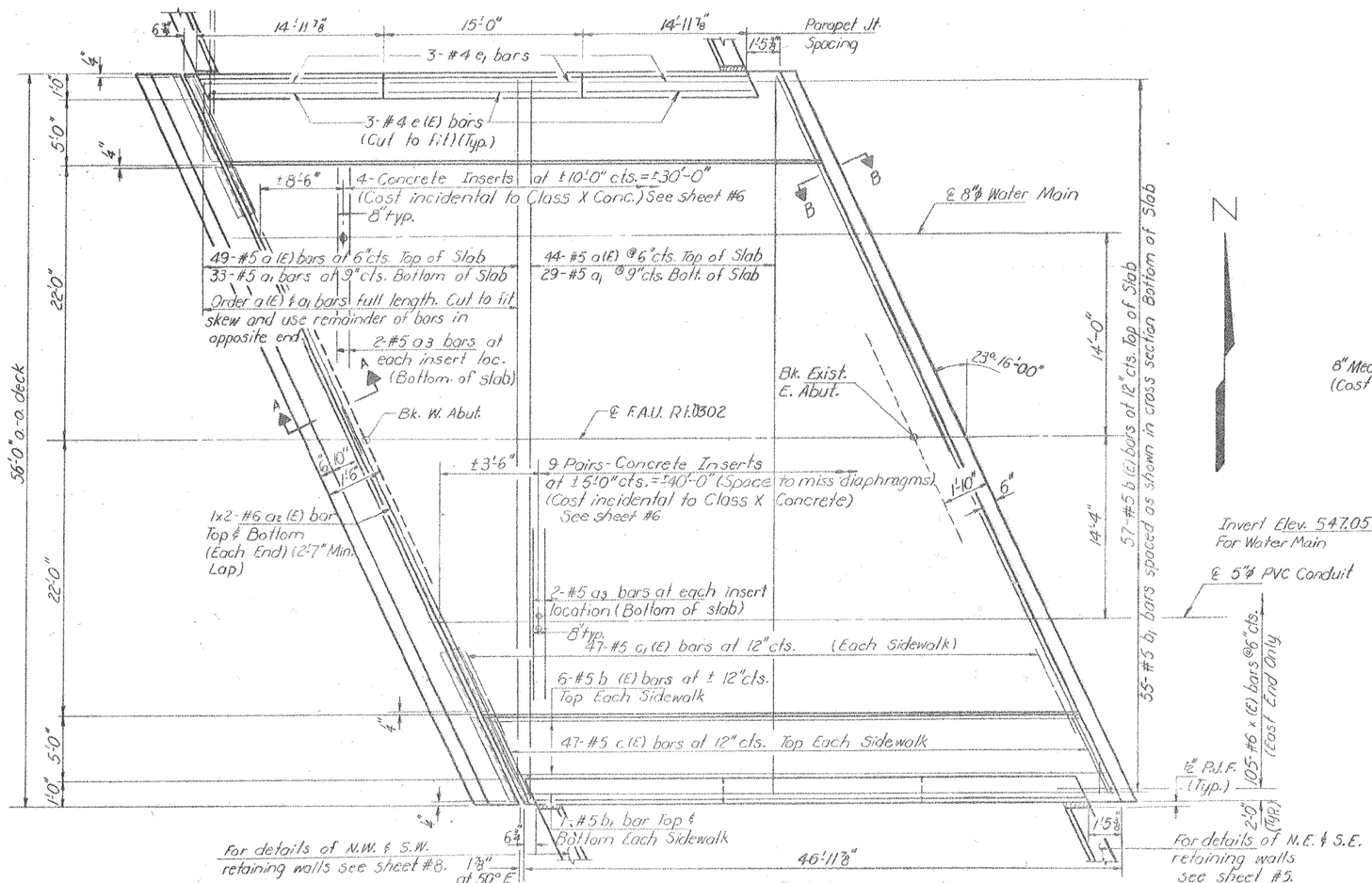

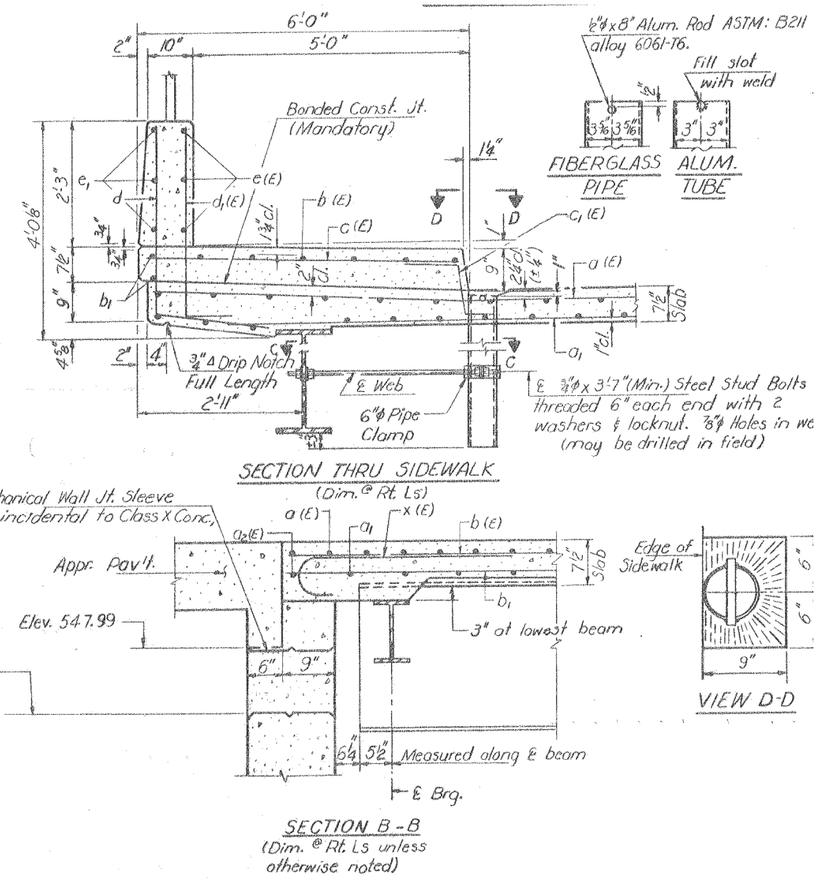

FOR INFORMATION ONLY

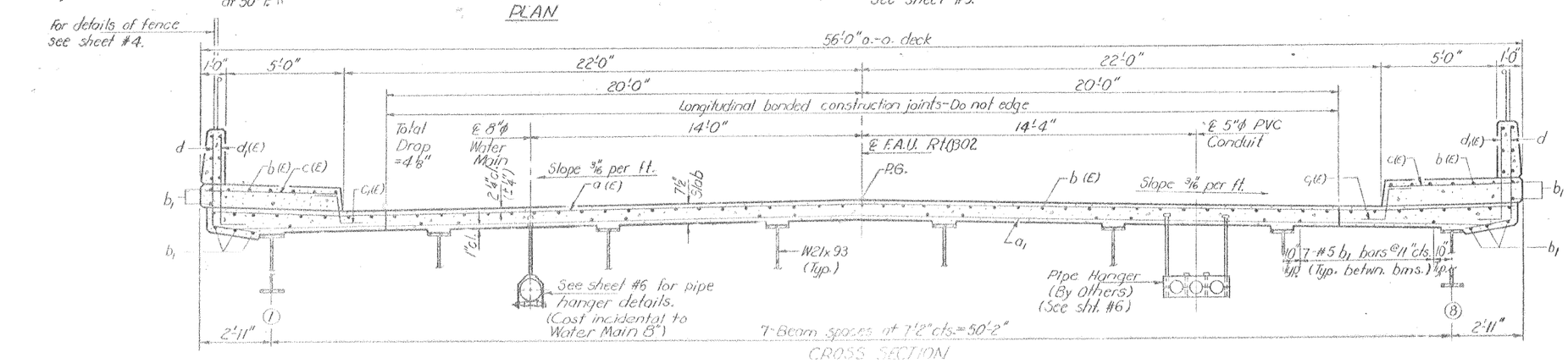

FILE NAME =	USER NAME = osbornenp	DESIGNED -	REVISED -	STATE OF ILLINOIS DEPARTMENT OF TRANSPORTATION	EXISTING PLANS. LOCATION 7 (SN 099-0150)	F.A. RTE.	SECTION	COUNTY	TOTAL SHEETS	SHEET NO.
c:\pw_work\pwidot\osbornenp\d0388535\D184514-sht-plan.dgn		DRAWN -	REVISED -			VAR	2014-0341	WILL&DUPAGE	57	19
	PLOT SCALE = 100.0000 ' / in.	CHECKED -	REVISED -					CONTRACT NO. 60Y28		
Default	PLOT DATE = 8/22/2014	DATE -	REVISED -		SCALE: SHEET OF SHEETS STA. TO STA.			ILLINOIS FED. AID PROJECT		