F.A. RTE.	SECTION	COUNTY	TOTAL SHEETS	SHEET NO.
2666	00-00254-01-BR	LAKE	70	27
STA. 98+50		TO STA. 107+57		
FED. ROAD DIST. NO.	ILLINOIS	FED. AID PROJECT		

Sheet 4 of 35 Sheets
PROJECT NO. BHM-8003(213)
CONTRACT NO. 83875

When "A" is 3'-6" or less, the temporary concrete barrier shall be anchored to the new slab according to Detail I or Detail II. No anchorage is required when "A" is greater than 3'-6".

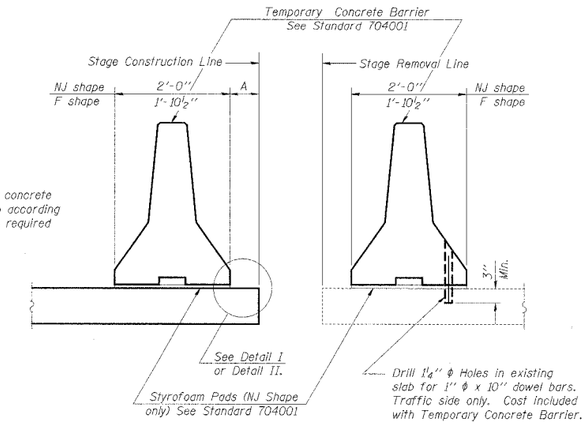

NEW SLAB

EXISTING SLAB

SECTIONS THRU SLAB

NOTES

Detail I - With Bar Splicer or Couplers:
Connect one (1) 1"x7"x10" steel ℙ to the top layer of couplers with 2-⅝" ϕ bolts screwed to coupler at approximate ℄ of each barrier panel.

Detail II - With Extended Reinforcement Bars:
Connect one (1) 1"x7"x10" steel ℙ to the concrete slab with 2-⅝" ϕ Expansion Anchors or cast in place inserts spaced between the top layer of reinforcement at approximate ℄ of each barrier panel.

Cost of anchorage is included with Temporary Concrete Barrier.

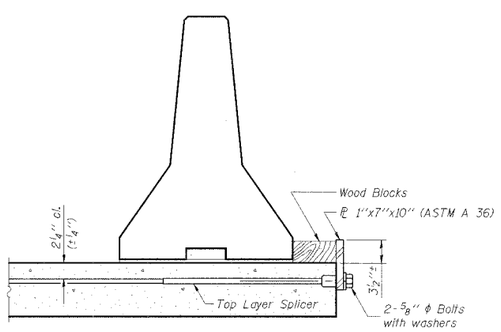

DETAIL I

The 1"x7"x10" Plate shall not be removed until Stage II Construction forms and reinforcement bars are in place.

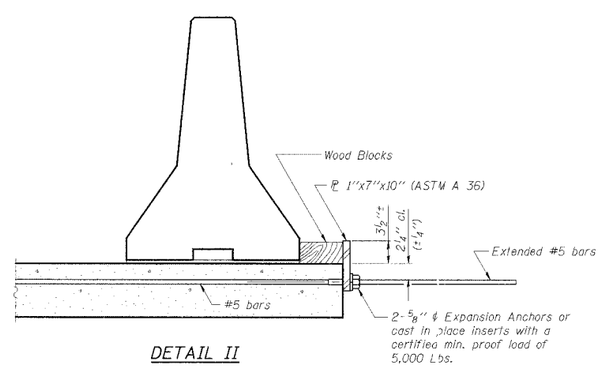

DETAIL II

The 1"x7"x10" Plate shall not be removed until Stage II Construction forms and all reinforcement bars are in place and the concrete is ready to be placed.

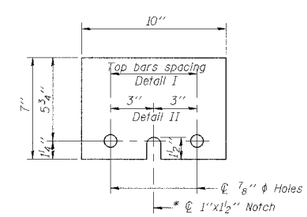

ℙ 1"x7"x10"

* Required only with Detail II

REVISIONS	
NAME	DATE

CMT
CRAWFORD MURPHY & TILLY, INC.
CONSULTING ENGINEERS
SPRINGFIELD, IL ■ AURORA, IL ■ ST. LOUIS, MO
ROCKFORD, IL ■ PEORIA, IL ■ CHICAGO, IL

LAKE COUNTY DIVISION OF TRANSPORTATION

TEMPORARY CONCRETE BARRIER

BUFFALO GROVE ROAD
AT INDIAN CREEK BRIDGE
SECTION 00-00254-01-BR STATION 101+50.00
LAKE COUNTY STRUCTURE NO. 049-3043

SCALE: NONE DRAWN BY: TBW
DATE: 7/21/06 CHECKED BY: ATI, WK

TEMPORARY CONCRETE BARRIER

PLAN	BY	DATE
SURVEYED		
PLOTTED		
NOTE BOOK	PLOTTED CHECKED	
NO.	RT. OF WAY CHECKED	
	FIELD FILE NAME	

PROFILE	BY	DATE
SURVEYED		
PLOTTED		
NOTE BOOK	PLOTTED CHECKED	
NO.	BLM NOTED	
	STRUCTURE NOTATIONS CHKD	

I:\lakeco\0220113\draw\sheets\struct16-16-06\temp conc barrier.dgn

R-27 9-01-03