STATE OF ILLINOIS
DEPARTMENT OF TRANSPORTATION

ROUTE NO.	SECTION	COUNTY	TOTAL SHEETS	SHEET NO.
F.A.S. 1279	(P-10)BR	LaSALLE	34	14
FED. ROAD DIST. NO. 7		ILLINOIS	FED. AID PROJECT-	

SHEET NO. 5 OF 10 SHEETS

Contract #66661

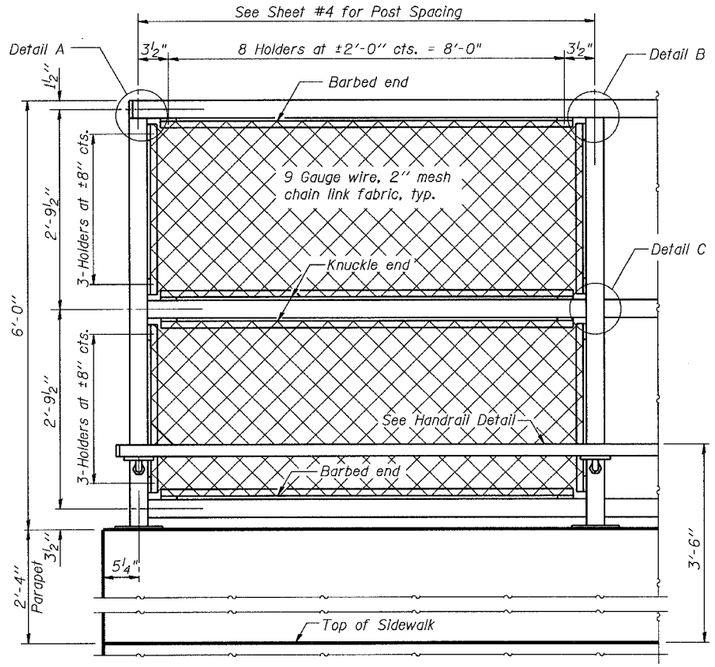

ELEVATION
(Inside Face)

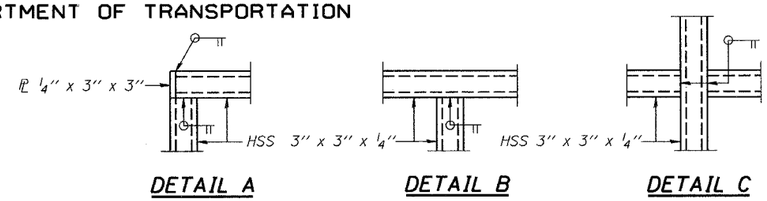

DETAIL A DETAIL B DETAIL C

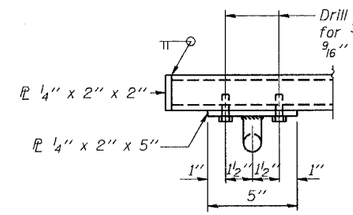

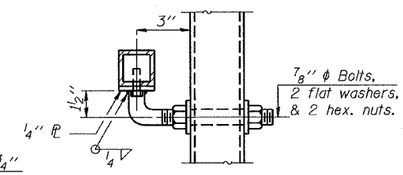

HANDRAIL DETAIL

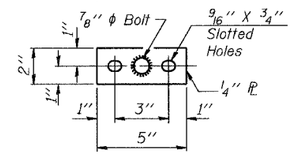

BASE ℄
(Handrail)

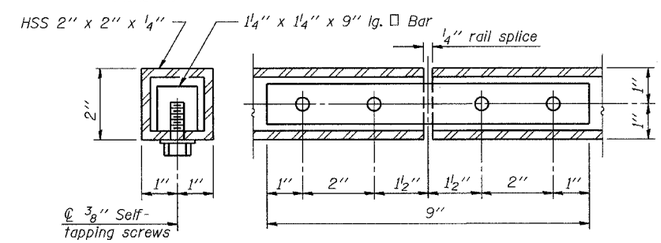

HANDRAIL SPLICE

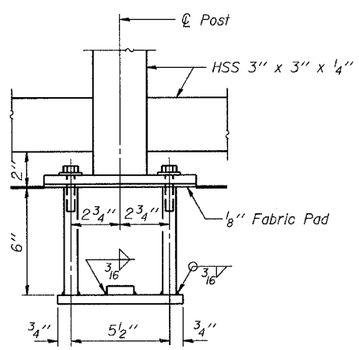

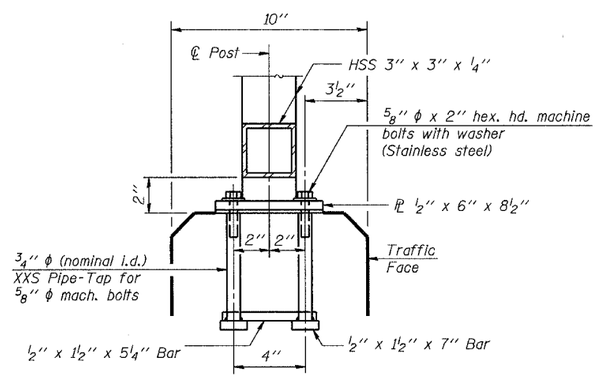

ANCHOR BOLT DETAILS

In lieu of the cast-in-place anchor device shown, the Contractor has the option of drilling and epoxy grouting ⅝" ϕ anchor rods. Embedment shall be according to the manufacturer's specifications.

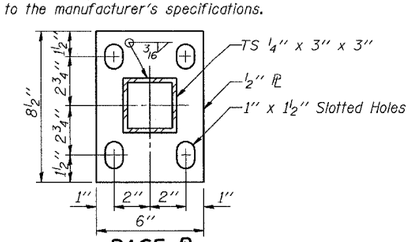

BASE ℄

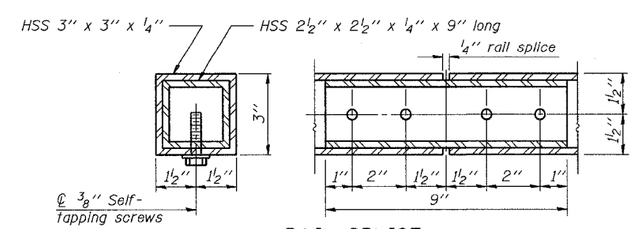

RAIL SPLICE

NOTES

Railing shall be according to Section 509 of the Standard Specifications, except as noted, and will be paid for at the Contract Unit Price per foot for Pedestrian Railing.

The 9 gauge fabric ties shall be according to Article 1006.27(d) of the Standard Specifications.

Installation of the chain ilnk fabric shall be according to Section 664 of the Standard Specifications.

Hollow structural sections shall conform to the requirements of ASTM designation A 500, Grade B, structural steel tubing.

All other steel shapes and plates shall conform to the requirements of AASHTO M 270 Grade 36.

The chain link fabric shall be placed along Pedestrian Side as shown on Section A-A.

Stretcher bars shall be used at all four sides of each panel.

If the option of drilling and epoxy grouting the anchor rods is chosen, the Contractor shall use the capsule or the adhesive cartridge type anchor rods that have been previously tested and given a prior approval by the Department. The Contractor shall install these anchor rods in pre-drilled holes according to the manufacturer's recommendations and procedures. The capsule or the adhesive cartridge shall be sealed with pre-measured amounts of the adhesive chemical.

Space reinforcement to miss anchor rods.

All posts, railing, splices, anchor devices, and bent plates shall be galvanized after shop fabrication according to AASHTO M 111 and ASTM A 385. All bolts, nuts, washers, and anchor rods shall be galvanized according to AASHTO M 232 except stainless steel bolts as noted.

Vent holes for galvanizing shall be placed in the posts and rails at locations that will not allow the accumulation of moisture in the members.

The chain link fabric shall conform to the requirements of Article 1006.27(a)(1)a, b or c of the Standard Specifications.

BILL OF MATERIAL

Item	Unit	Quantity
Pedestrian Railing	Foot	35

DESIGNED	DAF
CHECKED	AAG
DRAWN	DAF
CHECKED	KBG

PEDESTRIAN RAILING
F.A.S. 1279 - ILLINOIS RTE. 178
OVER CLARK RUN
SECTION (P-10)BR
LaSALLE COUNTY
STATION 151+38.00
STRUCTURE NO. 050-0238