F.A.P. RTE.	SECTION	COUNTY	TOTAL SHEETS	SHEET NO.
343	*	COOK	24	24
STA.	TO STA.			
FED. ROAD DIST. NO.	ILLINOIS	FED. AID PROJECT		

*70HB-F & 70D-Y-B-F CONTRACT NO. 60B70

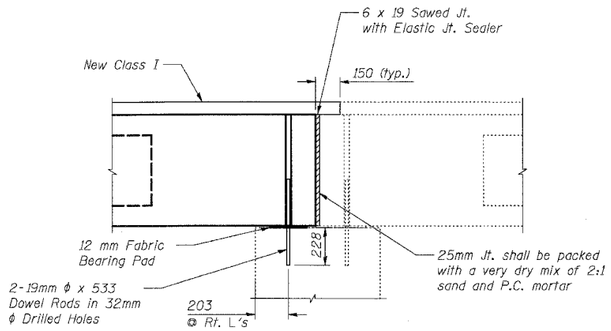

SECTION AT PIERS

* Existing Dowel Rods shall be cut off & ground flush with the top of the existing concrete. (Cost to be included in the cost of "Removal of Existing P.P.C. Deck Beams). Proposed Dowel Rods shall be grouted after beam is in place and allowed to cure (min. 24 hrs.) prior to grouting shear keys.

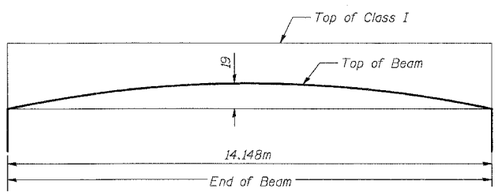

ANTICIPATED INITIAL CAMBER DIAGRAM

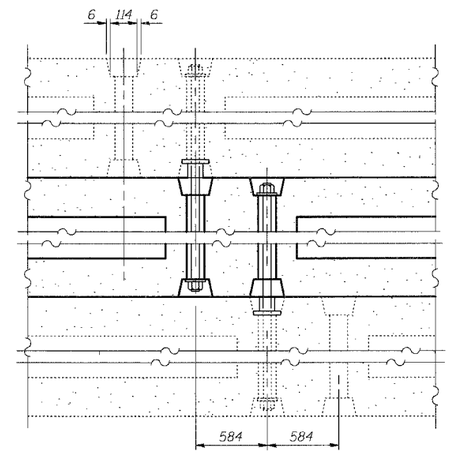

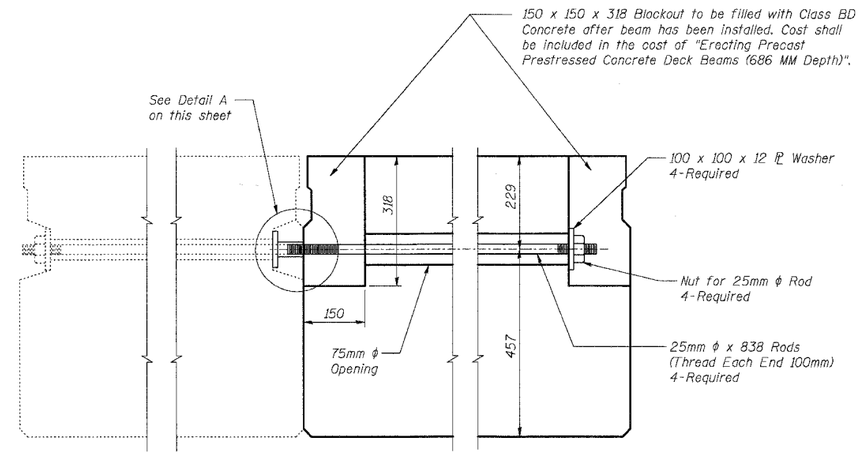

TYPICAL TRANSVERSE TIE ASSEMBLY

FOR INFORMATION ONLY
NOT PART OF THIS CONTRACT

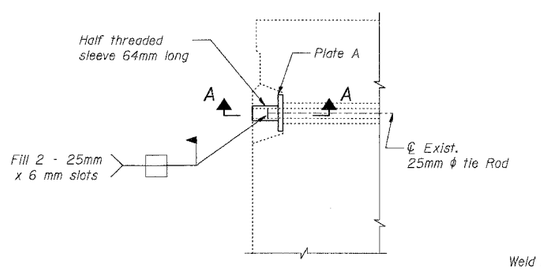

DETAIL A

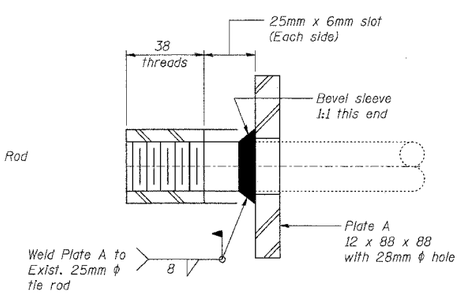

SECTION A-A

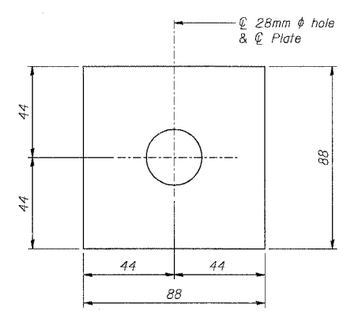

PLATE A

SHT. S-24 OF S-24

REVISIONS	
NAME	DATE

ILLINOIS DEPARTMENT OF TRANSPORTATION
IL ROUTE 68 OVER US-14 & UPRR
F.A.P. ROUTE 343 SECTION 70HB-F & 70D-Y-B-F
COOK COUNTY
STRUCTURE NO. 016-2861 & 016-2732

DECK BEAM DETAILS

DATE: 6/06 DESIGNED: BTO CHECKED: JAN DRAWN: BTO CHECKED: JAN