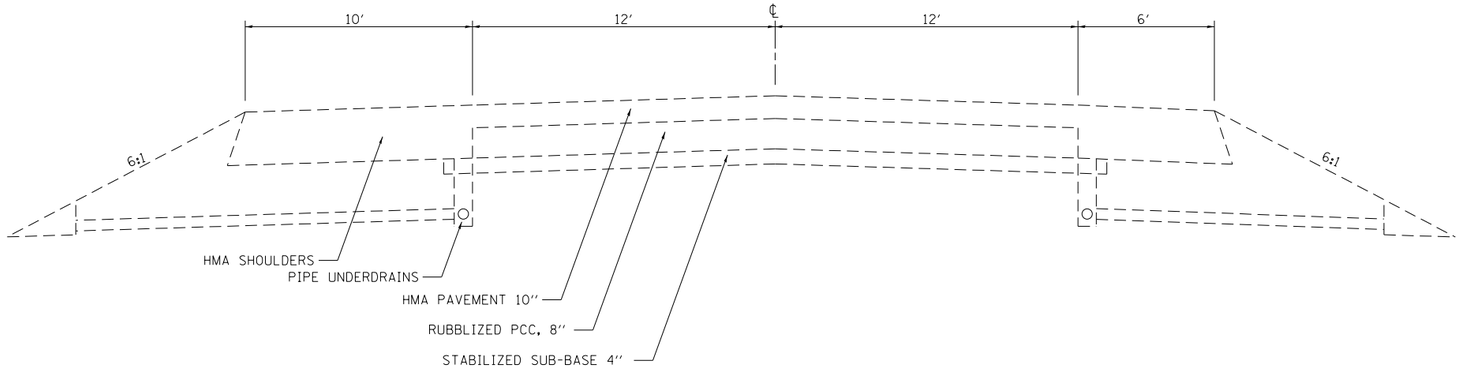

EXISTING TYPICAL SECTION

WESTBOUND
STA. 292+20 TO STA. 457+80

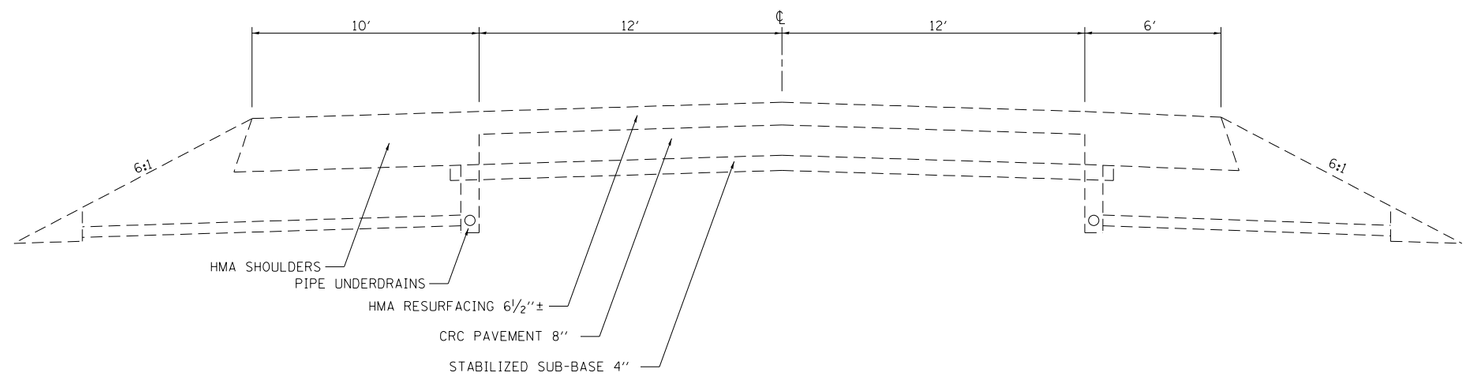

EXISTING TYPICAL SECTION

WESTBOUND
STA. 457+80 TO STA. 675+54

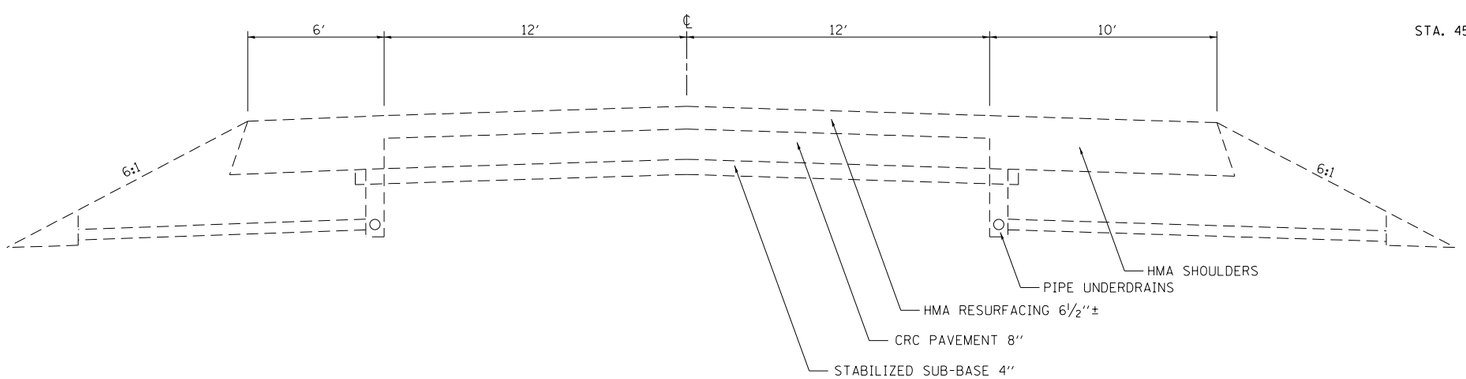

EXISTING TYPICAL SECTION

EASTBOUND

NOTE: NOT DRAWN TO SCALE

FILE NAME = c:\pw_work\pwidot\teasleyck\d0148656\D774416-sht-typicals.dgn	USER NAME = teasleyck	DESIGNED -	REVISED -	STATE OF ILLINOIS DEPARTMENT OF TRANSPORTATION	EXISTING TYPICAL SECTIONS	F.A.I. RTE.	SECTION	COUNTY	TOTAL SHEETS	SHEET NO.
		DRAWN -	REVISED -			70	(18-47,48,49)R	CUMBERLAND	30	7
	PLOT SCALE = 100.0000 ' / in.	CHECKED -	REVISED -					CONTRACT NO. 74416		
	PLOT DATE = 8/17/2012	DATE -	REVISED -		SCALE: NA SHEET OF SHEETS STA. TO STA.		ILLINOIS FED. AID PROJECT			